SEMINOLE AH-TAH-THI-KI VISITOR RESTROOM

34600 W BOUNDARY ROAD, CLEWISTON, FLORIDA 33440

Ken Gardner, ASLA, LEED AP
President
Rosenberg Gardner Design
17670 NW 78th Avenue, Suite 214

WOLFBERG ALVAREZ
ARCHITECTURE · ENGINEERING
3225 AVIATION AVE., SUITE 400
MIAMI, FLORIDA 33133
V 305.666.5474
F 305.666.4994
WOLFBERGALVAREZ.COM
AA 002416 EB 002354

BLISS & NYITRAY, INC.
STRUCTURAL ENGINEERS

PERMIT SET
MAY 27, 2016

INDEX OF DRAWINGS

SHEET	DESCRIPTION	05-27-2016 PERMIT SET
	GENERAL	
A0.01	COVER SHEET	●
A0.02	INDEX OF DRAWINGS	●
LS1.01	RESTROOM BUILDING LIFE SAFETY PLANS	●
	CIVIL	
C.2	LAYOUT PLAN	●
C.3	PAVING GRADE & DRAINAGE PLAN	●
C.4.1	WATER & SEWER PLAN	●
C.4.2	WATER & SEWER PLAN	●
C4.3	PUMP STSTION DETAILS	●
	LANDSCAPE	
LA1.01	LANDSCAPE NOTES, SPECIFICATIONS AND DETAILS	●
	ARCHITECTURE	
A2.01	SITE PLAN	●
A3.01	RESTROOM BUILDING PLANS	●
A4.01	RESTROOM BUILDING ELEVATIONS	●
A5.01	STORAGE BUILDING SECTIONS	●
A7.01	WALL SECTION	●
A7.02	RESTROOM ELEVATIONS AND EQUIPMENT	●
A8.01	DETAILS	●
A8.02	DETAILS	●
A9.01	SCHEDULES	●
	STRUCTURE	
S1.01	GENERAL NOTES	●
S2.01	FOUNDATION AND GROUND FLOOR PLANS	●
S2.02	ROOF FRAMING PLANS	●
A3.01	GROUND LEVEL DETAILS	●
A3.02	MASONRY DETAILS	●

SHEET	DESCRIPTION	05-27-2016 PERMIT SET
	PLUMBING	
P3.01	PLUMBING STORAGE BUILDING AND RESTROOMS PLANS	●
P5.01	ISOMETRICS	●
P6.01	NOTES, SCHEDULES AND DETAILS	●
P6.02	DETAILS	●
	MECHANICAL	
M1.01	LEGEND AND SCHEDULES	●
M3.01	HVAC- STORAGE BUILDING AND RESTROOM PLANS	●
M8.01	DETAILS	●
	ELECTRICAL	
E1.01	LEGEND AND GENERAL NOTES	●
E1.02	ELECTRICAL- SITE PLAN	●
E1.03	PLANTING LIGHTING PLAN	●
E1.04	PHOTOMETRICS	●
E1.05	DETAILS	●
E3.01	STORAGE AND RESTROOM BUILDING LIGHTING PLAN	●
E4.01	STORAGE AND RETROOM BUILDING POWERS AND SYSTEMS PLAN	●
E6.01	POWER RISER DIAGRAM AND ELECTRICAL ROOMS	●
E6.02	FIRE ALARM RISER AND NOTES	●
E7.01	DETAILS	●
E8.01	PANEL SCHEDULES	●

WOLFBERG ALVAREZ
ARCHITECTURE · ENGINEERING
3225 AVIATION AVE., SUITE 400
MIAMI, FLORIDA 33133
V 305.666.5474
F 305.666.4994
WOLFBERGALVAREZ.COM
AA 002416 EB 002354

SEMINOLE AH-TAH-THI-KI VISITOR RESTROOM
34600 W BOUNDARY ROAD
CLEWISTON, FL 33440

SEAL

MARCEL R. MORLOTE, A.I.A.
FL. ARCHITECT
FL. ARCH. REG. NO. 9564

WA PROJECT NO.: 21524.00

ISSUE DATE
05/27/2016

NO.	REVISION DATE

DRAWING TITLE
INDEX OF DRAWINGS

SHEET NUMBER
A0.02

P:\Seminoles Maintenance Building and Restrooms 2015\Drawings\CD\Visitor Restrooms\Architecture\A0.02-SVR.dwg Jun 02, 2016 - 3:53pm - JMETHANCTON

To the best of the Architect's or Engineer's knowledge, the plans and specifications comply with the applicable minimum codes and the applicable fire-safety standards as determined by the local authority in accordance with F.B.C. section 110.3.7.4.4 and Chapter 633, Florida Statutes.

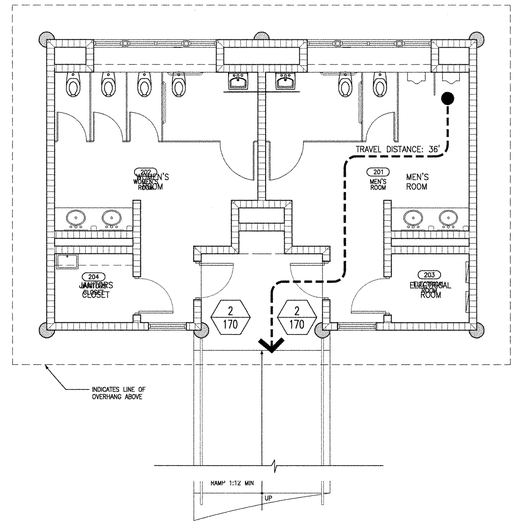

1 LS1.01 RESTROOM BUILDING PLAN
SCALE: 3/16"=1'-0"

Building Code and Life Safety Code Analysis

Applicable Codes and Standards:
Florida Building Code 2014
Florida Fire Prevention Code Fifth Edition (FFPC)
National Fire Protection Association (NFPA) 101 – Life Safety Code 2012 (LSC)

Project Summary:
The project consists of a new one (1) story approximately 1,000 g.s.f. restroom building.

Gross Building Area (as defined by FBC 2014 – Section 502.1):
Restroom Building: 1,000 GSF

Occupancy Classification:
Storage Group S–1 (FBC 2014– Section 311)

Type of Construction:
Minimum Required: Type VB – FBC 2014 – Table 601.
Maximum Allowable Stories, Area and Height: S–1 = 1 story, 9,000 sq.ft./Floor, and 40' high (FBC 2014 – Table 503)

Building Component (FBC 2014–Table 601)	Type VB
Exterior Bearing Walls	0 Hr.
Interior Bearing Walls	0 Hr.
Structural Frame (Columns and Beams)	0 Hr.
Floors	0 Hr.
Roofs and Roof Assemblies	0 Hr.

			FBC 2014
Exterior Walls (Horizontal Distance from Common Property Line) 30' and Over	0 Hr.		Table 602
Maximum Area of Exterior Wall Openings (to interior property line or center line of a street, alley, or public way) 30'–0" and Greater	Unprotected, Sprink.	Protected	
	No Limit	No Limit	Table 705.8

Minimum Roof Covering Classification:
Class "A" FBC 2014 – 1516.2.1

Minimum Interior Finishes (FBC 2014 Table 803.9 – NFPA 101 10.2):
Class "C" Nonsprinklered for rooms and enclosed spaces.

Means of Egress:
Occupant load factors used – FBC 2014 – Table 1004.1.1 and NFPA 101 2012 – Table 7.3.1.2:

Use	Load Factor	
Storage	500 gross	

Maximum allowable travel distances based on occupancy are as follows:

	Max. Travel Distance (ft.) FBC 2014 –Table 1016.2	Common Path of Travel (ft.) FBC 2014 – Table 1014.3	Dead–End Corridor (ft.) FBC 2014–1018.4
Storage	200 (without sprinklers)	100 (without sprinklers)	20 (without sprinklers)

Egress Width (FFPC 2014 – Table 7.3.3.1): 0.2" for level

Minimum Corridor Width (FBC 2014 – Section 1018.2): 44" Minimum
Egress Headroom (FFPC 2014 – Section 7.1.5.1): 44" Minimum
7'–6" Minimum
6'–8" Projections

Spaces with one exit– FBC 2014 – Table 1015.1
Occupancy: Storage Group S – 29 Maximum occupant load / 100' Travel Distance

LIFE SAFETY LEGEND & NOTES:

- 250' TRAVEL DISTANCE
- FE FIRE EXTINGUISHER ON MOUNTING BRACKET (UL–4A/40 BC)
- FEC FIRE EXTINGUISHER CABINET (UL–4A/40 BC)
- 105 / 340 — ACTUAL OCCUPANTS EXITING / MAX. OCCUPANTS ALLOWED THRU GOVERNING COMPONENT
- EMERGENCY LIGHT
- P PULL STATION
- F FIRE ALARM HORN/STROBE
- S STROBE LIGHT
- EXIT SIGN
- SMOKE DETECTOR

WOLFBERG ALVAREZ
ARCHITECTURE · ENGINEERING
3225 AVIATION AVE., SUITE 400
MIAMI, FLORIDA 33133
V 305.666.5474
F 305.666.4994
WOLFBERGALVAREZ.COM
AA 002416 EB 002354

SEMINOLE AH-TAH-THI-KI VISITOR RESTROOM
34600 W BOUNDARY ROAD
CLEWISTON, FL 33440

SEAL
REGISTERED ARCHITECT MARCEL E. MORLOTE FLORIDA
MAY. 27 2016

MARCEL E. MORLOTE, A.I.A.
FL. ARCHITECT
FL. ARCH. REG. NO. 9564

WA PROJECT NO.: 21524.00

ISSUE DATE
05/27/2016

NO.	REVISION DATE

DRAWING TITLE
STORAGE AND RESTROOM LIFE SAFETY PLANS

SHEET NUMBER
LS1.01

P:\Seminoles Maintenance Building and Restrooms 2015\Drawings\GD\Visitor Restrooms\Architecture\LS1.01-SVR.dwg Jun 02, 2016 - 3:03pm ZWETHINGTON

To the best of the Architect's or Engineer's knowledge, the plans and specifications comply with the applicable minimum codes and the applicable fire–safety standards as determined by the local authority in accordance with F.B.C. section 110.3.7.4.4 and Chapter 633, Florida Statutes.

GENERAL NOTES:

1. UNLESS, OTHERWISE NOTED, ALL DIMENSIONS REFER TO THE EDGE OF PAVEMENT AND/OR TO FACE OF BUILDING.
2. INFORMATION SHOWN ON THE DRAWINGS HAS BEEN PREPARED FROM THE SURVEY PREPARED BY THE SEMINOLE TRIBE OF FLORIDA, SURVEY AND MAPPING DEPARTMENT, PROJECT No.: EX-2069 , DATED 04-11-12. INFORMATION SHOWN ON THESE DRAWINGS AS TO THE LOCATION OF EXISTING UTILITIES HAS BEEN PREPARED FROM THE MOST RELIABLE DATA AVAILABLE TO THE A/E. HOWEVER, THIS INFORMATION IS NOT GUARANTEED. THE CONTRACTOR SHALL DETERMINE THE LOCATION, CHARACTER, AND DEPTH OF ALL EXISTING UTILITIES THROUGH HIS/HER OWN QUALIFIED RESOURCES. THE CONTRACTOR SHALL ASSIST THE UTILITY COMPANIES, TO THE FULL EXTENT POSSIBLE, TO DETERMINE THE SAID LOCATIONS.
3. FOR ALL EXCAVATIONS THAT EXCEED FIVE FEET IN DEPTH FROM THE EXISTING SURFACE ELEVATION, THE CONTRACTOR SHALL MEET ALL PROVISIONS OF THE FLORIDA STATE BILL CS/SB 2626, THE 1990 "TRENCH SAFETY ACT".
4. QUALITY ASSURANCE: THE CONTRACTOR SHALL COMPLY WITH FEDERAL, STATE, AND LOCAL ORDINANCES AND CODES RELATIVE TO RUBBLE, HAULING, DISPOSAL, DUST CONTROL, ETC.
5. PROTECTION:
   A. EXISTING UTILITIES: INFORMATION SHOWN ON THE DRAWINGS AS TO THEIR LOCATION HAS BEEN PREPARED FROM THE MOST RELIABLE DATA AVAILABLE TO THE A/E; HOWEVER, THIS INFORMATION IS NOT GUARANTEED. IT SHALL BE THE CONTRACTOR'S RESPONSIBILITY TO DETERMINE THE LOCATION, CHARACTER, AND DEPTH OF EXISTING UTILITIES. THE CONTRACTOR SHALL ASSIST THE UTILITY COMPANIES AND UNDERGROUND UTILITY LOCATORS, BY EVERY MEANS POSSIBLE, TO DETERMINE SAID LOCATIONS AND THE LOCATIONS OF RECENT ADDITIONS TO THE SYSTEMS NOT SHOWN. EXTREME CAUTION SHALL BE EXERCISED BY THE CONTRACTOR TO ELIMINATE ANY POSSIBILITY OF DAMAGE TO UTILITIES DURING CONSTRUCTION. THE LOCATION OF ALL UTILITIES SHALL BE VERIFIED AND THE PROJECT REPRESENTATIVE NOTIFIED OF ANY CONFLICT THAT MIGHT OCCUR. THE CONTRACTOR SHALL BE RESPONSIBLE FOR DETERMINING WHICH CONDITIONS WILL NEED SHORING DURING EXCAVATION AND SHALL PROVIDE SUCH SHORING AND SUPPORT AS IS REQUIRED.
   B. MONUMENT OR PROPERTY LINE MARKERS LOCATED WITHIN THE LIMITS OF CONSTRUCTION SHALL NOT BE DISTURBED.
6. INSPECTION: EXAMINE AREAS OF PROPOSED CONSTRUCTION AND COORINATE METHODS AND TIMES OF ACTIVITIES WITH THE OWNER.
7. HANDICAPPED RAMPS SHALL COMPLY WITH THE AMERICANS WITH DISABILITIES ACT AND THE FLORIDA ACCESSIBILITY CODE FOR BUILDING CONSTRUCTION.
8. ALL WORK SHALL COMPLY WITH THE REQUIREMENTS OF THE SEMINOLE TRIBE OF FLORIDA STANDARDS.
9. ALL EXISTING IMPROVEMENTS DISTURBED BY CONSTRUCTION OPERATIONS SHALL BE RESTORED TO ORIGINAL (AS-NEW) CONDITIONS.
10. THE WORDS 'NEW', 'PROPOSED', 'INSTALL', 'PROVIDE', OR WORDS WITH SIMILAR MEANING, ON ANY PART OF THESE CONSTRUCTION DOCUMENTS, SHALL BE INTERPRETED, UNLESS OTHERWISE SPECIFICALLY STATED, TO MEAN 'FURNISH AND INSTALL COMPLETE IN PLACE AND READY FOR SERVICE'.
11. THESE CONSTRUCTION DOCUMENTS ARE COMPLEMENTARY. WORK DEPICTED UNDER A PARTICULAR DISCIPLINE MAY TRIGGER WORK UNDER A DIFFERENT DISCIPLINE. SUCH WORK, REQUIRED FOR THE INTENDED AND PROPER FUNCTION OF THE IMPROVEMENTS, SHALL BE CONSIDERED INCIDENTAL AND PART OF THE CONTRACTOR'S BID PRICE. NO ADDITIONAL PAYMENT WILL BE MADE FOR SUCH ITEMS.
12. THE CONTRACTOR SHALL COORDINATE THE WORK DEPICTED UNDER CIVIL AND PLUMBING DISCIPLINES AND PROVIDE ALL THE REQUIRED PIPING CONNECTIONS BETWEEN THE PLUMBING SYSTEMS AND CIVIL SYSTEMS WHETHER SAID CONNECTIONS ARE SHOWN OR NOT ON THE DRAWINGS. SAID CONNECTIONS, REQUIRED FOR THE INTENDED AND PROPER FUNCTION OF THE IMPROVEMENTS, SHALL BE CONSIDERED INCIDENTAL AND PART OF THE CONTRACTOR'S BID PRICE. NO ADDITIONAL PAYMENT WILL BE MADE FOR SUCH ITEMS.

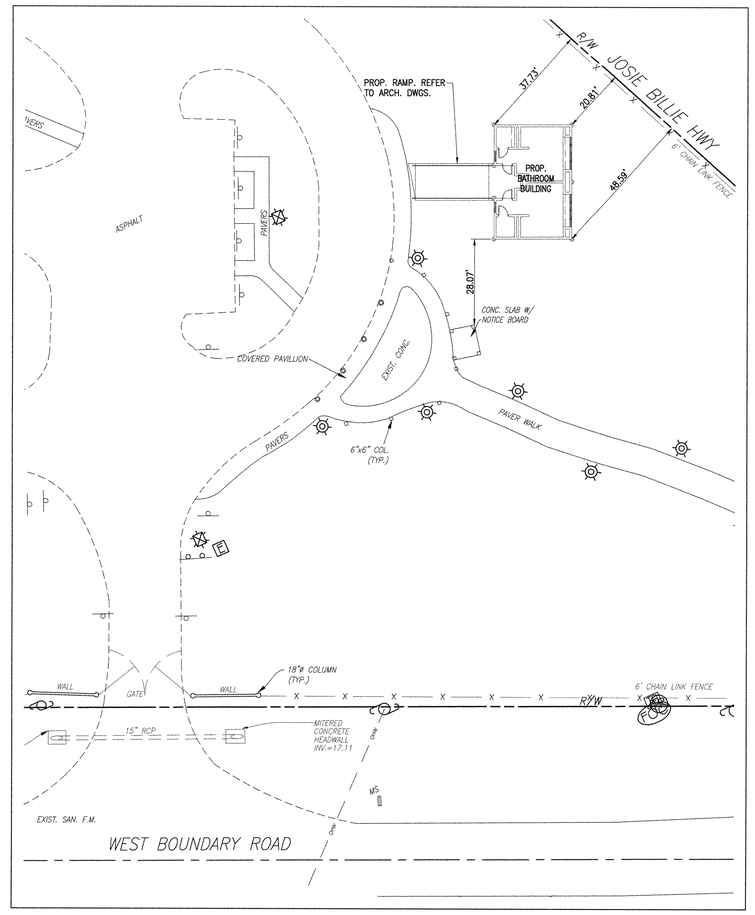

LEGEND:

DENOTES NEW CONC. PAD/WALKWAY

DENOTES GRAVEL ROAD/PAD

LAYOUT PLAN
SCALE: 1" = 20'

To the best of the Architect's or Engineer's knowledge, the plans and specifications comply with the applicable minimum codes and the applicable fire-safety standards as determined by the local authority in accordance with F.B.C. section 110.3.7.4.4 and Chapter 633, Florida Statutes.

WOLFBERG ALVAREZ
ARCHITECTURE ENGINEERING
3225 AVIATION AVE., SUITE 400
MIAMI, FLORIDA 33133
V 305.666.5474
F 305.666.4994
WOLFBERGALVAREZ.COM
AA 002416 EB 002354

SEMINOLE AH-TAH-THI-KI VISITOR RESTROOM

34600 W BOUNDARY ROAD
CLEWISTON, FL 33440

SEAL

JORGE G. MALDONADO P.E.
FL. ENGINEER
FL. ENG. REG. NO. 58684

WA PROJECT NO.: 21524.00

ISSUE DATE
05/27/2016

NO.	REVISION DATE

DRAWING TITLE
LAYOUT PLAN

SHEET NUMBER
C.2

F:\Seminoles Maintenance Building and Restrooms 2015\Drawings\CD\Visitor Restrooms\CIVIL\C.2-LPM-SVR.dwg Jun 02, 2016 - 4:01pm MALDONADO

GENERAL NOTES

1. ALL ELEVATIONS REFER TO THE NATIONAL GEODETIC VERTICAL DATUM (N.G.V.D.) OF 1929.
2. FEDERAL EMERGENCY MANAGEMENT AGENCY (F.E.M.A.) FLOOD ZONE UNDETERMINED.
3. CONTRACTOR:
   A. COORDINATE YOUR WORK WITH OTHER CONTRACTORS' WORK TO AVOID POTENTIAL CONFLICTS.
   B. NOTIFY ALL UTILITY COMPANIES AT LEAST 48 HOURS BEFORE STARTING WORK.
   C. IF EXISTING IMPROVEMENTS ARE DAMAGED, RESTORE THEM TO THEIR ORIGINAL CONDITION. NO SEPARATE PAYMENT WILL BE MADE FOR THIS WORK.
4. RESTORE ALL PAVED AREAS AFTER COMPLETION OF UNDERGROUND WORK.

   THE CONTRACTOR SHALL COORDINATE THE WORK DEPICTED UNDER CIVIL AND PLUMBING DISCIPLINES AND PROVIDE ALL THE REQUIRED PIPING CONNECTIONS BETWEEN THE PLUMBING SYSTEMS AND CIVIL SYSTEMS WHETHER SAID CONNECTIONS ARE SHOWN OR NOT ON THE DRAWINGS. SAID CONNECTIONS, REQUIRED FOR THE INTENDED AND PROPER FUNCTION OF THE IMPROVEMENTS, SHALL BE CONSIDERED INCIDENTAL AND PART OF THE CONTRACTOR'S BID PRICE. NO ADDITIONAL PAYMENT WILL BE MADE FOR SUCH ITEMS.

EARTHWORK AND CLEARING NOTES

1. THE CONTRACTOR'S BID FOR EARTHWORK SHALL INCLUDE THE EXCAVATION AND DISPOSAL OF UNSUITABLE MATERIAL, AND REPLACEMENT WITH SUITABLE MATERIAL WITHIN THE LIMITS OF CONSTRUCTION. ALL MUCK, PEAT, OR SAND AND CLAY WITH A HIGH ORGANIC CONTENT SHALL BE CONSIDERED UNSUITABLE MATERIAL. SAID MATERIAL SHALL BE EXCAVATED AND DISPOSED OF IN COMPLIANCE WITH LOCAL REGULATIONS. IT IS THE CONTRACTOR'S RESPONSIBILITY TO VERIFY THE UNSUITABLE MATERIAL PRESENT ON-SITE AND INCLUDE THE REMOVAL AND REPLACEMENT OF SAME IN HIS BID PRICE. THE CONTRACTOR SHALL MAKE HIS OWN ESTIMATE ON THE VOLUME OF MATERIAL ACTUALLY REQUIRED TO OBTAIN THE CROSS SECTIONS OR GRADES AS SHOWN ON THE PLANS.
2. UPON REMOVAL OF UNSUITABLE MATERIALS, THE CONTRACTOR SHALL BACKFILL WITH SUITABLE MATERIAL TO A SURFACE CONFORMING TO THE PROPOSED GRADES AND READY TO RECEIVE THE BASE COURSE. BACKFILL SHALL BE CLEAN, ORGANIC-FREE MATERIAL CONTAINING ROCKS SMALLER THAN ONE INCH IN DIAMETER. THE SUBGRADE SHALL BE CONSTRUCTED IN LAYERS OF NOT MORE THAN 12" COMPACTED THICKNESS, AND COMPACTED TO 95% OF THE MAXIMUM DENSITY OBTAINABLE UNDER AASHTO SPECIFICATION T180-74 UNDER ALL AREAS, EXCEPT UNDER LANDSCAPED OR GRASS AREAS, WHERE 85% MAXIMUM COMPACTION IS REQUIRED.
3. OWNER-PROVIDED SOIL BORING INFORMATION IS INCLUDED IN THE PROJECT SPECIFICATIONS. THE SOIL BORING DATA IS FOR THE CONTRACTOR'S INFORMATION, THE ENGINEER DOES NOT MAKE ANY REPRESENTATION REGARDING EXISTING SUBSOIL CONDITIONS. IT IS THE CONTRACTOR'S RESPONSIBILITY TO PERFORM ADDITIONAL SOIL BORINGS TO VERIFY THE LIMITS OF UNSUITABLE MATERIAL ON-SITE.
4. WHEREVER EXCAVATIONS FOR UTILITIES ARE MADE BELOW THE GRADES INDICATED ON THE PLANS, GRANULAR MATERIAL FREE OF ORGANIC OR OTHER DELETERIOUS MATERIAL SHALL BE USED TO RESTORE THE AREA TO THE PROPER GRADE, AND SHALL BE COMPACTED TO 95% MAXIMUM DENSITY AT OPTIMUM MOISTURE, AASHTO T-180, METHOD "D".
5. AREAS TO BE FILLED & COMPACTED SHALL COMPLY WITH THE RECOMMENDATIONS OUTLINED IN THE SOILS REPORT IN ORDER TO OBTAIN THE DESIRED DENSITY.
6. PRIOR TO BACKFILLING AROUND DRAINAGE STRUCTURES, AREAS SHALL BE CLEAN OF ALL TRASH & DEBRIS OF ANY DESCRIPTION. BACKFILL SHALL BE HAND TAMPED IN 12" COMPACTED LIFTS.
7. LANDSCAPE AREAS FINISHED GRADING SHALL BE UNIFORMLY SMOOTH AND CONTOURED TO MEET THE INTENT OF THE GRADING PLAN, AESTHETICALLY PLEASING, DRAIN WELL, AND READY TO RECEIVE SOD AND OTHER PLANT MATERIAL TO FULL SATISFACTION OF THE OWNER.

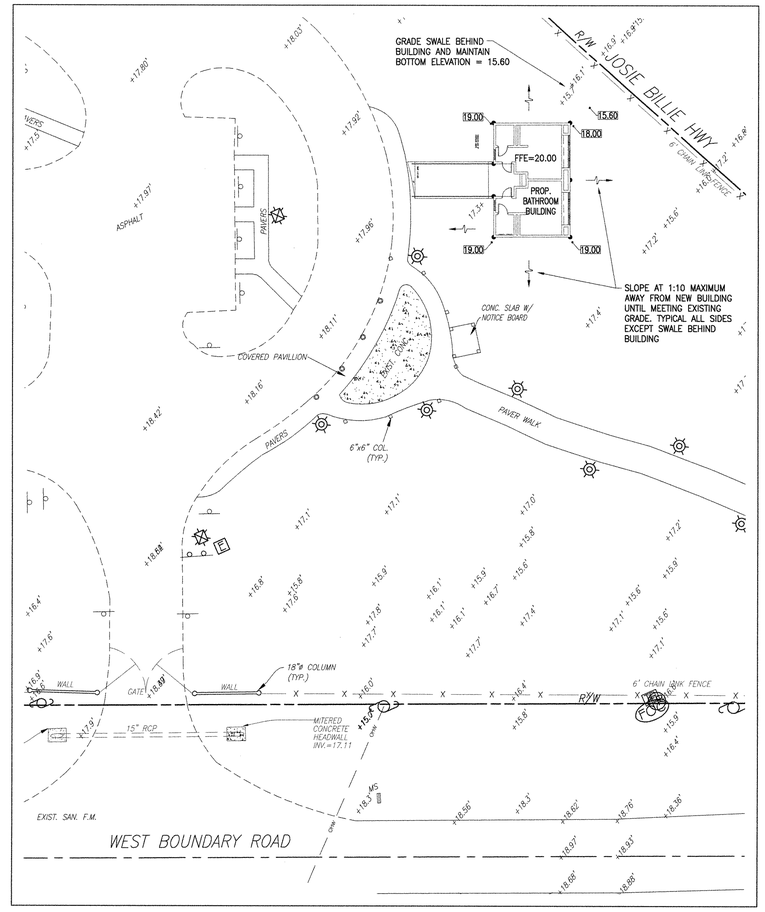

LEGEND:

+18.6'	DENOTES EXISTING ELEVATION
20.50	DENOTES PROPOSED ELEVATION
MEM	DENOTES MEET & MATCH EXIST. ELEVATION
	DENOTES NEW CONC. PAD/WALKWAY
	DENOTES GRAVEL ROAD/PAD

PAVING, GRADING & DRAINAGE PLAN
SCALE: 1" = 20'

To the best of the Architect's or Engineer's knowledge, the plans and specifications comply with the applicable minimum codes and the applicable fire-safety standards as determined by the local authority in accordance with F.B.C. section 110.3.7.4.4 and Chapter 633, Florida Statutes.

WOLFBERG ALVAREZ
ARCHITECTURE · ENGINEERING
3225 AVIATION AVE., SUITE 400
MIAMI, FLORIDA 33133
V 305.666.5474
F 305.666.4994
WOLFBERGALVAREZ.COM
AA 002416 EB 002354

SEMINOLE AH-TAH-THI-KI VISITOR RESTROOM
34600 W BOUNDARY ROAD
CLEWISTON, FL 33440

SEAL

JORGE G. MALDONADO P.E.
FL. ENGINEER
FL. ENG. REG. NO. 58684

WA PROJECT NO.: 21524.00

ISSUE DATE
05/27/2016

NO.	REVISION DATE

DRAWING TITLE
PGD PLAN

SHEET NUMBER
C.3

P:\Seminoles Maintenance Building and Restrooms\2015\Drawings\CD\Visitor Restrooms\CIVIL\C.3-PGD-SVR.dwg Jun 02, 2016 - 4:01pm - JMALDONADO

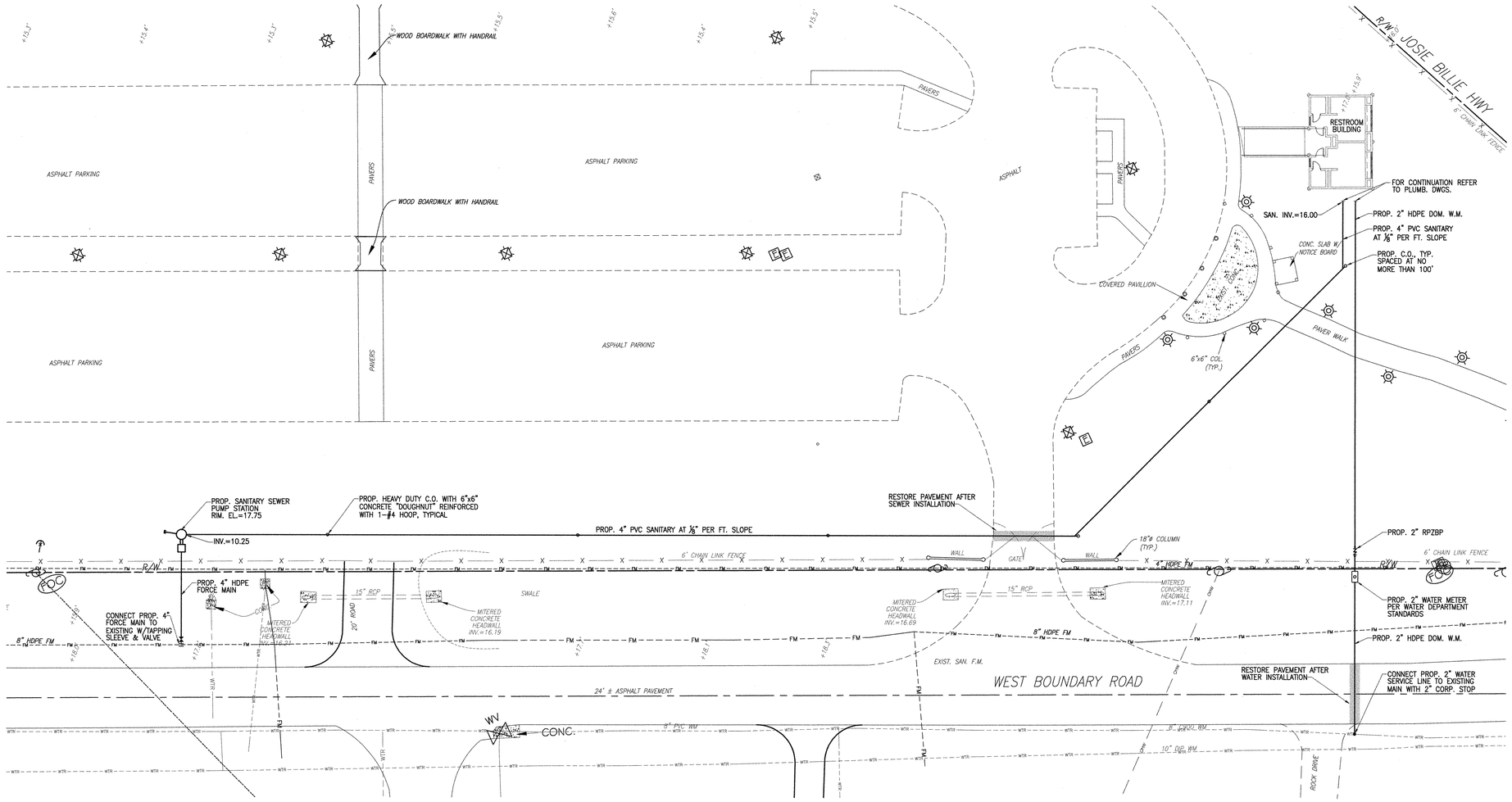

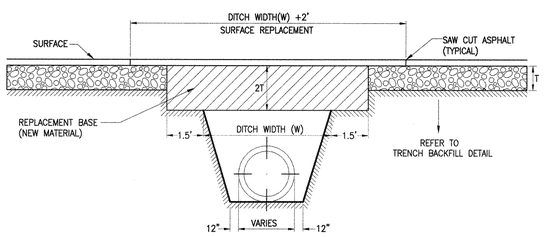

NOTES

1. DETAIL TO BE USED FOR PAVEMENT RESTORATION AFTER WATER & SEWER LINES INSTALLATION.
2. REPLACED BASE MATERIAL OVER DITCH SHALL BE TWICE THE THICKNESS OF THE ORIGINAL BASE, MINIMUM 8", MAXIMUM 18".
3. BASE MATERIAL SHALL BE PLACED IN 6" MAXIMUM (LOOSE MEASUREMENT) LAYERS AND EACH LAYER THOROUGHLY ROLLED OR TAMPED TO 98% OF MAXIMUM DENSITY, PER ASTM SPECIFICATIONS D-1557 OR D-2922.
4. THE ASPHALT SURFACE COURSE SHALL BE TYPE SP-9.5 PER F.D.O.T. SPECIFICATIONS.
5. THE BASE COURSE SHALL BE COMPACTED TO A DENSITY NOT LESS THAN 98% OF THE MAXIMUM DENSITY OBTAINABLE UNDER AASHTO SPECIFICATION T180-74.
6. A PRIME COAT SHALL BE APPLIED TO THE FULL WIDTH OF THE ROADWAY BASE.
7. IF THE DITCH IS FILLED TEMPORARILY, IT SHALL COVERED WITH A 2" THICK ASPHALTIC CONCRETE PATCH TO KEEP THE FILL MATERIAL FROM RAVELING, UNTIL REPLACED WITH A PERMANENT PAVEMENT PATCH.

ASPHALT PAVEMENT RESTORATION SECTION

N.T.S.

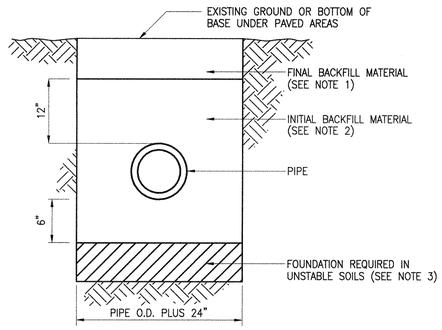

NOTES

1. FINAL BACKFILL TO CONSIST OF SATISFACTORY MATERIAL FREE FROM ROCKS 2" OR LARGER IN ANY DIMENSION. IT SHALL BE PLACED IN 12" LAYERS AND EACH LAYER COMPACTED TO 90% OF MAXIMUM DENSITY FOR COHESIVE SOILS OR 95% FOR COHESIONLESS SOILS.
2. INITIAL BACKFILL TO CONSIST OF SELECT GRANULAR MATERIAL. IT SHALL BE PLACED IN 6" LAYERS AND EACH LAYER COMPACTED TO 95% OF MAXIMUM DENSITY.
3. WHERE UNSTABLE SOILS ARE ENCOUNTERED, INCLUDING PEAT, MUCK OR OTHER ORGANIC SOILS, ELASTIC SILT AND CLAYS BELOW THE WATER TABLE, A FOUNDATION IS REQUIRED. COMPACTED TO AT LEAST 95% OF MAX. DENSITY, IN 6" LIFTS, PER AASHTO SPEC. No. T-180. FOUNDATION MATERIAL SHALL BE SELECT BACKFILL MATERIAL. 2" MAXIMUM SIZE 6" LIFTS EXTEND EXCAVATION AT LEAST 2' DEEPER FOR FOUNDATION UNLESS SUITABLE MATERIAL IS FOUND AT A LESSER DEPTH, GREATER DEPTHS MAY BE REQUIRED FOR EXTREMELY POOR CONDITIONS.

TRENCH BACKFILL DETAIL

N.T.S.

WATER & SEWER PLAN

SCALE: 1" = 20'

To the best of the Architect's or Engineer's knowledge, the plans and specifications comply with the applicable minimum codes and the applicable fire-safety standards as determined by the local authority in accordance with F.B.C. section 110.3.7.4.4 and Chapter 633, Florida Statutes.

WOLFBERG ALVAREZ
ARCHITECTURE · ENGINEERING
3225 AVIATION AVE., SUITE 400
MIAMI, FLORIDA 33133
V 305.666.5474
F 305.666.4994
WOLFBERGALVAREZ.COM
AA 002416 EB 002354

SEMINOLE AH-TAH-THI-KI VISITOR RESTROOM

34600 W BOUNDARY ROAD
CLEWISTON, FL 33440

SEAL: JORGE G. MALDONADO LICENSE No. 58684 STATE OF FLORIDA PROFESSIONAL ENGINEER
6-3-16

JORGE G. MALDONADO P.E.
FL ENGINEER
FL. ENG. REG. NO. 58684

WA PROJECT NO.: 21524.00

ISSUE DATE
05/27/2016

NO.	REVISION DATE

DRAWING TITLE
W & S PLAN

SHEET NUMBER
C.4.1

P:\Seminoles Maintenance Building and Restrooms.2015\Drawings\CD\Visitor Restrooms\CIVIL\C.4.1-WAS-SVR.dwg Jun 03, 2016 - 11:20am JUALDONADO

E/ONE EXTREME SERIES

WH231/WR231

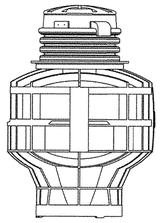

General Features

The model WH231 or WR231 grinder pump station is a complete unit that includes: the grinder pump, check valve, polyethylene tank, controls, and alarm panel. The lower portion of the tank has a smaller diameter, tapered down to a dish-shaped bottom. These design features reduce the retained volume and promote scouring, which will minimize odor and corrosiveness.

- Rated for flows of 850 gpd (3218 lpd)
- 237 gallons (874 liters) of capacity
- Standard outdoor heights range from 55 inches to 92 inches

The WH231 is the "hardwired," or "wired," model where a cable connects the motor controls to the level controls through watertight penetrations.

The WR231 is the "radio frequency identification" (RFID), or "wireless," model that uses wireless technology to communicate between the level controls and the motor controls.

Operational Information

Motor
1 hp, 1,725 rpm, high torque, capacitor start, thermally protected, 120/240V, 60 Hz, 1 phase

Inlet Connections
4-inch inlet grommet standard for DWV pipe. Other inlet configurations available from the factory.

Discharge Connections
Pump discharge terminates in 1.25-inch NPT female thread. Can easily be adapted to 1.25-inch PVC pipe or any other material required by local codes.

Discharge
15 gpm at 0 psig (0.95 lps at 0 m)
11 gpm at 40 psig (0.69 lps at 28 m)
7.8 gpm at 80 psig (0.49 lps at 56 m)

Accessories

E/One recommends that the Uni-Lateral, E/One's own stainless steel check valve, be installed between the grinder pump station and the street main for added protection against backflow.

Alarm panels are available with a variety of options, from basic monitoring to advanced notice of service requirements.

The Remote Sentry is ideal for installations where the alarm panel may be hidden from view.

PROVIDE WIRED OPTION

Patent Numbers: 5,752,315
5,562,254 5,439,180

NA0059P01 Rev B

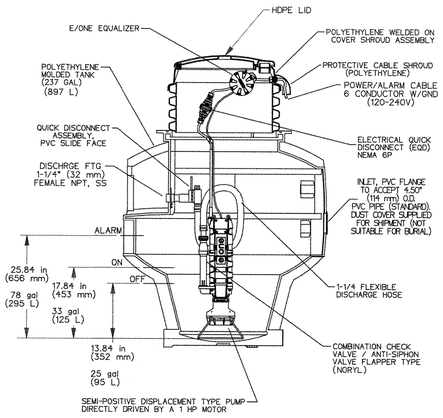

CONCRETE BALLAST MAY BE REQUIRED
SEE INSTALLATION INSTRUCTIONS
FOR DETAILS

NOTE: DIMENSIONS ARE FOR REF ONLY

AD	SGS	12/23/10	F	
DR BY	CHK'D	DATE	ISSUE	SCALE

e/one SEWER SYSTEMS

MODEL WH231 / WR231
DETAIL SHEET

NA0059P02

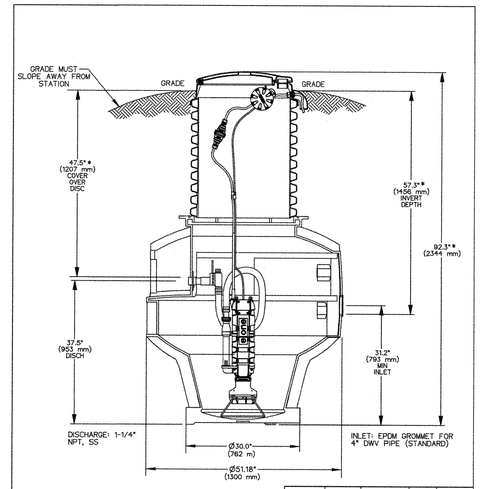

CONCRETE BALLAST MAY BE REQUIRED
SEE INSTALLATION INSTRUCTIONS
FOR DETAILS

NOTE: DIMENSIONS ARE FOR REF ONLY

* MINIMUM DEPTHS. ADJUST AS REQUIRED FOR INVERT PER PLANS

AD	SGS	12/23/10	D	
DR BY	CHK'D	DATE	ISSUE	SCALE

e/one SEWER SYSTEMS

MODEL WH231-92 / WR231-92

NA0059P05

E/ONE EXTREME SERIES

E/One T260

Duplex Alternating Alarm Panel

Description

The T260 Duplex Alternating Alarm panel is custom designed for use with Environment One duplex grinder pump stations.

Duplex grinder pump stations, a station with two grinder pumps, require the pumping load to be shared equally between the two pumps. Under normal conditions, one pump removes the accumulated sewage from the grinder pump basin. After 24 hours, the T260 Alternating Panel toggles the electrical supply power to the pump that was idle. If the sewage level reaches the alarm level, the two grinder pumps will operate simultaneously for 3 to 4 minutes. If, after that time, the sewage is not below the alarm level, the alarm circuit is engaged.

The T260 Alternating Panel is supplied with audible and visual high water level alarms. The panel is easily installed in accordance with relevant national and local codes.

The T260 Panel is listed by Underwriters Laboratories, CSA, CE and NSF to ensure high quality and safety.

Standard Features

UL-approved, corrosion-proof enclosure
NEMA 4X-rated enclosure with hinged access panel
Lockable latch with keyed-alike padlock included
Circuit breakers
Terminal blocks & ground lugs
Dry contacts
Lead/lag, run and alarm indicator lights
Manual push-to-run

Optional Features

Hour meters
E/One Remote Sentry ready (with power loss high level alarm capability)
Dead front
Generator receptacle with auto transfer
GFCI receptacle
Auto dialer

Consult factory for special applications

LM000372 Rev A

DUPLEX ALTERNATING PANEL T-260

EXTERNAL VISUAL & AUDIBLE ALARM
EXTERNAL LATCHING MANUAL SILENCE
MANUAL RUN
PUMP RUN INDICATORS
CONFORMAL COATED CIRCUIT BOARD
PADLOCK
ALARM DRY CONTACT
NEMA 4X ENCLOSURE ASSEMBLY

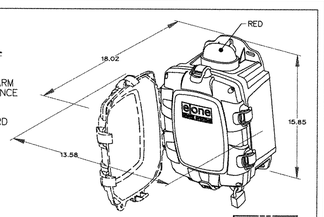

CORROSION PROOF THERMOPLASTIC POLYESTER APPROVED BY UL FOR ELECTRICAL CONTROL ENCLOSURE

OPTIONS:
☐ HOUR METER

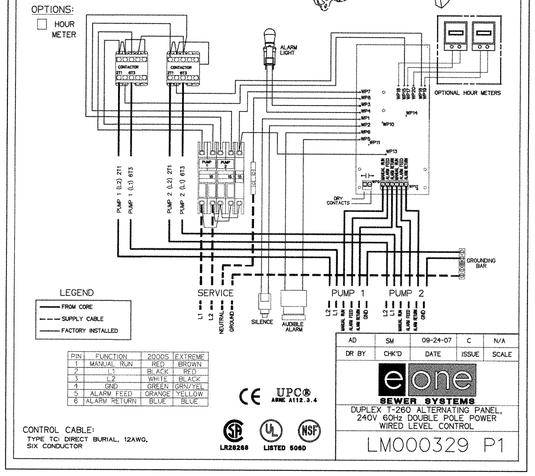

P/N	FUNCTION	2000S	EXTREME
1	MANUAL RUN	RED	BROWN
2	L1	BLACK	RED
3	L2	WHITE	BLACK
4	GND	GREEN	GREN/YEL
5	ALARM FEED	ORANGE	YELLOW
6	ALARM RETURN	BLUE	BLUE

CONTROL CABLE:
TYPE TC: DIRECT BURIAL, 12AWG, SIX CONDUCTOR

CE UPC® ANSI/ NSF 61 & 372 ANSI Z21.22 & CSA 6.5

LR28268 LISTED 5060

AD	SM	09-24-07	C	N/A
DR BY	CHK'D	DATE	ISSUE	SCALE

e/one SEWER SYSTEMS

DUPLEX T-260 ALTERNATING PANEL, 240V 60Hz DOUBLE POLE POWER WIRED LEVEL CONTROL

LM000329 P1

PUMP STATION DETAILS

WOLFBERG ALVAREZ
ARCHITECTURE · ENGINEERING
3225 AVIATION AVE., SUITE 400
MIAMI, FLORIDA 33133
V 305.666.5474
F 305.666.4994
WOLFBERGALVAREZ.COM
AA 002416 EB 002354

SEMINOLE AH-TAH-THI-KI VISITOR RESTROOM
34600 W BOUNDARY ROAD
CLEWISTON, FL 33440

SEAL
JORGE G. MALDONADO LICENSE No. 58684 STATE OF FLORIDA PROFESSIONAL ENGINEER

JORGE G. MALDONADO P.E.
FL. ENGINEER
FL. ENG. REG. NO. 58684

WA PROJECT NO.: 21524.00

ISSUE DATE
05/27/2016

NO.	REVISION DATE

DRAWING TITLE
P.S. DETAILS

SHEET NUMBER
C.4.2

P:\Seminoles Maintenance Building and Restrooms\2015\Drawings\CD\Visitor Restrooms\C4.2-PS-SVR.dwg Jun 03, 2016 - 8:36am JMALDONADO

To the best of the Architect's or Engineer's knowledge, the plans and specifications comply with the applicable minimum codes and the applicable fire-safety standards as determined by the local authority in accordance with F.B.C. section 110.3.7.4.4 and Chapter 633, Florida Statutes.

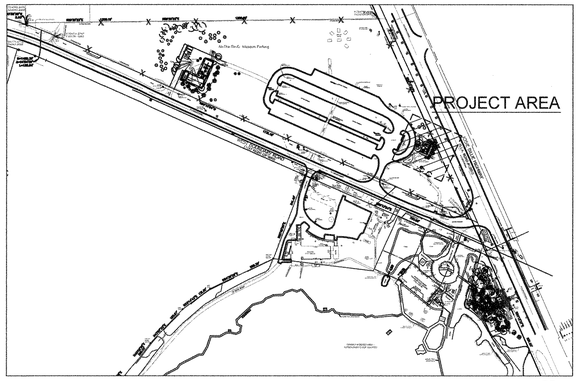

REFERENCE PLAN

SCALE: N.T.S.

EXISTING TREE DISPOSITION LIST

VISITOR RESTROOM

KEY	BOTANICAL NAME	COMMON NAME	SIZE HT.(ft.)	SPD.(ft.)	DBH.(in.)	DISPOSITION REMAIN	REMOVE	TRANSPL.	MITIGATION S.F. CANOPY
1	Bursera simaruba	Gumbo Limbo	16	20	14	X			
2	Tabebuia caraiba	Silver Trumpet Tree	16	16	8	X			
3	Tabebuia caraiba	Silver Trumpet Tree	14	10	6	X			
4	Myrciianthes fragrans	Simpson's Stopper	8	6	multi	X			
5	Myrciianthes fragrans	Simpson's Stopper	8	6	multi	X			
6	Myrciianthes fragrans	Simpson's Stopper	8	6	multi	X			
7	Acoelorrhaphe wrightii	Paurotis Palm	14	10	multi	X			
8	Acoelorrhaphe wrightii	Paurotis Palm	14	10	multi	X			
9	Acoelorrhaphe wrightii	Paurotis Palm	14	10	multi	X			
					TOTAL CANOPY S.F. TO BE REPLACED				-
					TOTAL CANOPY S.F. MITIGATION PROVIDED				1,500

PLANT LIST

VISITOR RESTROOM

KEY	PLANT NAME	QTY.	UT.	SIZE
ACWR	Acoelorrhaphe wrightii ...Paurotis Palm	7	ea.	8' tall OA, 5 trunks min.
HANO	Hamelia nodosa ...Dwarf Firebush	40	ea.	18"x18", install where shown
MUCA	Muhlenberghia capillaris ...Muhly Grass	24	ea.	3 gallon cans, full, install where shown
PSBA	Psychotria bahamensis ...Bahamas Wild Coffee	30	ea.	18"x18", install where shown
QUVI	Quercus virginiana ...Live Oak	2	ea.	14' tall x 6' spread, 3" cal.
SAPA	Sabal palmetto ...Sabal Palm	3	ea.	1@20' tall OA, 1@25' tall OA, 1@30' tall OA, smooth trunks, curved trunks, leaning 5-10° as shown, hurricane cut.
TRDA	Tripsicum dactyloides ...Fakahatchee Grass	20	ea.	3 gallon cans, full, install where shown
sod	Bahia sod	as req.	s.f.	solid sod, patch as necessary
	Planting Soil 80% Silica Sand 20% Everglades Muck	as req.	c.y.	
	Shredded Melaluca Mulch	as req.	c.y.	

EXISTING TREE LEGEND

EXISTING TREE TO REMAIN | EXISTING TREE TO BE REMOVED | EXISTING TREE TO BE TRANSPLANTED

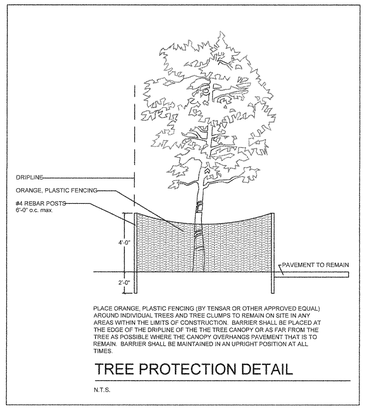

TREE PROTECTION DETAIL

N.T.S.

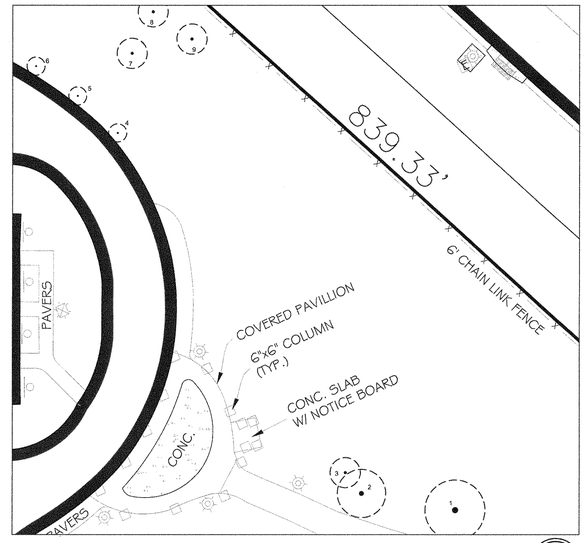

EXISTING TREE DISPOSITION PLAN

SCALE: 1"=20'-0"

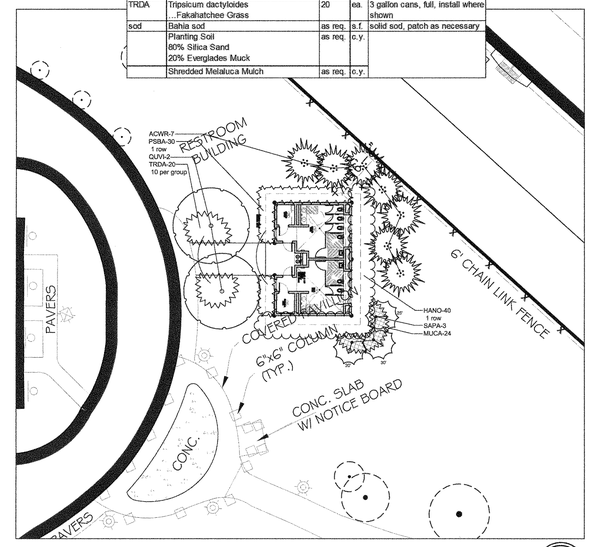

EXISTING TREE DISPOSITION PLAN

SCALE: 1"=20'-0"

LANDSCAPE SPECIFICATIONS

PART 1 - GENERAL

1.1 SCOPE
A. Contractor shall provide all labor, materials, equipment, supervision, and related work necessary to complete the landscape work in accordance with the intent of the landscape plans, schedules and these specifications. The extent of work is shown on the drawings which are a part of this document.

1.2 CONTRACTOR QUALIFICATIONS
A. Landscape installation work to be performed by a Contractor Certified by the Florida Nurserymen, Growers and Landscape Association (FNGLA) as a Certified Landscape Contractor. Any pruning to be supervised by an Arborist, certified by the International Society of Arboriculture (ISA) and licensed in Miami-Dade County.

1.3 INVESTIGATION OF UTILITIES
A. Prior to beginning work, the Contractor shall be responsible to locate existing underground utilities. Check with all utility companies and Sunshine State, call (811).

1.4 SUBSTITUTIONS
A. Only materials specified will be accepted, unless approved in writing by the Landscape Architect in advance.

1.5 PLANT SIZES
A. All plant sizes shall equal or exceed the minimum sizes as specified in the plant list. When plant sizes are specified as a range of size, installed materials shall average the mean of the range specified. Plants shall be measured following pruning, with branches in normal position. All necessary pruning shall be done at the time of planting.

1.6 PLANT QUALITY
A. All plant material shall be equal to or better than Florida No. 1 as classified by "Grades and Standards for Nursery Plants" by the Division of Plant Industry, Florida Department of Agriculture. They shall have a growth habit that is normal for the species; healthy, vigorous, free from insects, disease and injury.

B. The Owner or Landscape Architect reserves the right to refuse any plant material which does not conform to the intent of the written specifications or design.

C. CIRCLING ROOTS FOUND ON CONTAINER-GROWN MATERIAL WILL NOT BE ACCEPTED UNLESS REMEDIAL ROOT PRUNING, APPROVED BY THE LANDSCAPE ARCHITECT IS DONE BEFORE PLANTING.

1.7 PLANT QUANTITY
A. The plant quantities shown on the plant list are to be used only as an aid to bidders. In the case of discrepancy between the plant list and the plan, the quantity on the plan shall override the plant list.

1.8 UNIT PRICES
A. The successful bidder shall furnish to the Owner and the Landscape Architect, a unit price breakdown for all materials. The Owner may, at his discretion, add to or delete from the materials utilizing the unit price breakdown submitted to and accepted by the Owner.

1.9 SUBMITTALS
A. Fertilizer: The Contractor shall submit to the Owner and Landscape Architect documentation that all the fertilizer used for the project is of the analysis specified and placed at the rates specified in section 2.2 FERTILIZER.

B. Planting soil: The Contractor shall submit a sample of the planting soil (approximately 1 cu. Ft.) for approval by the Landscape Architect prior to delivery to the site.

1.10 CLEAN-UP & MAINTENANCE OF TRAFFIC
A. Follow procedures in FDOT Index 600 for maintenance of traffic during construction.

B. At the end of each work day, the Contractor shall remove debris and shall barricade the un-filled holes in a manner appropriate in the path of pedestrians and motorists.

C. Upon completion of the work or any major portion of the work or as directed by the Landscape Architect, all debris and surplus material from his work shall be removed from the job site.

1.11 MAINTENANCE PRIOR TO ACCEPTANCE
A. The Contractor is responsible to maintain the plantings until they are accepted under the provisions of 1.12 "ACCEPTANCE OF INSTALLATION".

1. Plants: Begin maintenance immediately following the final plant installation operation for each plant and continue until all plant installation is complete and accepted. Maintenance shall include watering all plants, weeding, mulching, pest and disease control, tightening and repairing of guys, repair of braces, removal of dead growth, resetting of plants to proper grade or up-right position, restoration of plant saucer, litter pick-up in plant beds and other necessary operations to assure specified minimum grade of Florida No. 1.

2. Turf Areas: Begin maintenance of turf immediately following the placement of sod and continue until sod installation is complete and accepted. Maintenance shall include but not be limited to, watering, leveling, mowing, weed and pest control, fungus and disease control and other necessary operations as determined by the Landscape Architect and good nursery practice.

3. Re-setting or straightening trees and palms:
The Contractor shall re-set and/or straighten trees and palms as required at no additional cost to the Owner unless caused by sustained winds of 75 mph or more. Then, the costs of the operations may be charged to the owner. Re-set trees within 48 hours.

1.12 ACCEPTANCE OF INSTALLATION
A. Inspection: Inspection of the work, to determine completion of contract work, exclusive of the possible replacement of plants and turf, will be made by the Landscape Architect at the conclusion of the maintenance period. Written notice requesting such an inspection and submitted by the Contractor at least ten (10) days prior to the anticipated date.

1.13 GUARANTEE
A. Guarantee all plants for a period of one year (CCD). Guarantee shall commence from the date of written acceptance. Plant material which is on the site and scheduled to be relocated is not covered by the guarantee except in the case of Contractor's negligence or work that has been done in an unworkman-like manner. The Contractor is not responsible for loss due to acts of god, (i.e.) sustained winds of 75 mph or more, floods, frost, lightning, vandalism or theft.

1.14 REPLACEMENT
A. Replacement shall be made during the guarantee period as directed by the Landscape Architect within ten (10) days from time of notification. For all replacement plant material, the guarantee period shall extend for an additional forty-five (45) days beyond the original guarantee period. The Contractor shall be responsible to provide water to the replacement plants in sufficient quantity to aid in their establishment. At the end of the guarantee period, inspection will be made by the Landscape Architect, upon written notice requesting such inspection and submitted by the Contractor at least five (5) days before the anticipated date. Replacement plants must meet the requirements of Florida No. 1 at time of inspection. Remove from the site all plants that are dead or in a state of unsatisfactory growth, as determined by the Landscape Architect. Replace these and any plants missing due to the Contractor's negligence as soon as conditions permit.

1. Materials and Operations: All replacement plants shall be of the same kind and size as indicated on the plant list. The Contractor shall supply and plant the plants as specified under planting operations.

2. Cost of Replacements: A sum sufficient to cover the estimated cost of possible replacements, including material and labor will be retained by the Owner and paid to the Contractor after all replacements have been satisfactorily made and approved by the Landscape Architect.

PART 2 - MATERIALS

2.1 PLANTING SOIL
A. Planting soil for trees, shrubs and ground covers shall be of the composition noted on the plans, measured by volume.

B. Soil for Sodded Areas: shall be coarse lawn sand.

2.2 FERTILIZER
A. Fertilizer for trees, palms, shrubs, and groundcovers shall be as follows: LESCO Palm Special 13-3-13 or equal, Sulfur coated with iron and other minor elements and maximum of 2% chlorine, or brand with equal analysis. The fertilizer shall be uniform in composition, dry and free flowing and shall be delivered to the site in the original unopened containers, bearing the manufacturer's guaranteed analysis. Fertilizer for sod and seeded areas shall be 8-8-8, 50% organically derived nitrogen, or equal.

2.3 WATER
A. The Contractor shall provide potable water on site, available from the start of planting. The Contractor is responsible to ascertain the location and accessibility of the water source. The Contractor is responsible to provide the means of distribution (i.e. water truck, hoses, etc.) for distribution of water to the planting areas.

2.4 MULCH
A. Mulch shall be shredded Melaleuca mulch (Florimulch) as manufactured by Forestry Resources, Inc., or equal.

2.5 ROOT BARRIER MATERIAL
A. When specified in the plans, root barrier material shall be Biobarrier (19.5 inch width) Reemay or approved equal.

B. Install per details in the plans.

PART 3 - INSTALLATION PROCEDURES

3.1 LAYOUT
A. Verify location of all underground utilities and obstructions prior to excavation.

3.2 HERBICIDE TREATMENT
A. In all areas infected with weed and/or grass growth, a systemic herbicide, such as Roundup, shall be applied per manufacturer's rates. When it has been established where work will be done, the systemic herbicide shall be applied in accordance with manufacturer's labeling to kill all noxious growth. Contractor shall schedule his work to allow more than one application to obtain at least 95% kill of undesirable growth. If necessary, Contractor shall conduct a test to establish suitability of product and applicator to be used on this project, prior to execution of the full application.

3.3 PLANT PIT EXCAVATION AND BACKFILLING
A. Trees: See the Planting and Bracing Details and notes.

B. All planting holes shall be hand dug where machine dug holes may adversely affect utilities or improvements.

C. Shrubs and Groundcover: Shrubs and groundcover shall be planted in a soil bed as described in the notes and details. Space shrubs and provide setback from curb and pavements as shown in the plans.

D. Watering of field-grown plants: Thoroughly puddle in water to remove any air pockets in the plant hole.

3.4 WATERING
A. The Contractor is responsible to provide the water for all new plants and transplants and means of distribution (i.e. hand watering or water truck) during the maintenance period and extending into the period after acceptance until the full schedule as listed below is complete. Water for trees and other large field grown plants shall be supplemented by hand or water truck, in addition to the irrigation system, (if one is provided). Contractor can adjust watering schedule during heavy rain season upon approval of the Landscape Architect.

AMOUNT OF WATER PER APPLICATION
For trees up to 5 inch caliper - 5 gallons
From 5 to 8 inch caliper - 25 gallons
9 inch and up caliper - 50 gallons

FREQUENCY OF WATER
Daily for the first week
3 times per week for weeks 2 - 5
2 times per week for weeks 6 - 8
1 time per week for weeks 9 - 12

B. Water in plants by thoroughly soaking of the entire root ball immediately after planting. For large trees and shrubs, add water while backfilling hole to eliminate any air pockets in the soil around the root ball.

C. Water shrubs, sod and groundcover a minimum of once daily for a week or until an irrigation system is fully operational. If no irrigation system is to be installed, the Contractor shall be responsible for watering the shrub, sod, and groundcover for the time specified above, after installation of each section of the planting installed.

3.5 FERTILIZING
A. Add fertilizer on top of the surface of shrubs beds and tree and palms root balls two (2) months after installation. Fertilize sod within two (2) days after installing after planting of each segment of the job. Fertilizer shall be applied after soil has been well moistened. Fertilizer shall be washed off of plant leaves and stems immediately after application. Apply at the following rates:

1. Trees and Large Shrubs: One (1) pound per inch of trunk diameter, spread evenly over the root ball area.

2. Shrubs: One half (1/2) handful per shrub, spread evenly over the root ball area.

3. Groundcover: Twelve (12) pounds per 100 sq. ft. of bed area.

4. Sod: Twelve (12) pounds per 1,000 sq. ft. Wash fertilizer off blades immediately after spreading.

3.6 MULCHING
A. Spread mulch two (2) inches thick uniformly over the entire surface of shrubs and groundcover beds, depth measured after settling, unless otherwise specified in the plans. Provide 36" diameter bed of mulch, measured from outer edge of the trunk, for all trees and palms planted in sod areas. Keep mulch away from contact with the trunk. Create a 6" high ring of mulch at the outer edge of tree and palm holes.

3.7 GUYING AND BRACING
A. See the details bound herewith or made part of the plans.

3.8 SODDING
A. Provide a blanket of lawn sand as described in the notes in these plans. Prior to planting, remove stones, sticks, etc. from the sub-soil surface. Excavate existing non-conforming soil as required so that the finish grade of sod is flush with adjacent pavement or top of curb as well as adjacent sod in the case of sod patching.

B. Place sod on moistened soil, with edges tightly butted, in staggered rows at right angles to slopes. The sod shall be rolled with a 500 pound hand roller immediately after placing.

C. Keep edge of sod bed a minimum of 18" away from groundcover beds and 24" away from edge of shrub beds and 36" from trees, measured from the edge of plant or tree trunk.

D. Sod shall be watered immediately after installation to uniformly wet the soil to at least two inches below the bottom of sod strips.

E. Apply fertilizer to the sod as specified in Section 3.5.

F. Excavate and remove excess soil so top of sod is flush w/top of curb or adjacent pavement, or adjacent existing sod.

PLANT BED PREPARATION NOTES

1. In all areas where new sod and shrub and groundcover masses are to be planted, kill all existing weeds by treating with Round-up prior to beginning soil preparation.

2. In all shrub and groundcover beds, prepare soil as described for either condition, over the entire area to be planted:

Condition A:
If any compacted road base or asphalt or rocky soil is encountered, remove compacted material entirely to allow an 18" depth of planting soil. Backfill the entire area of the shrub and groundcover beds with 18" planting soil (as specified in Plans) to within 2 inches of the adjacent pavement or top of curb. Remove all debris and rocks and pebbles larger than 1 inch in size and level the grade before planting.

Condition B:
Where no compacted soil is encountered, thoroughly mix 6 inches of planting soil into the existing soil to a depth of 18 inches. If required, excavate and remove the existing soil to lower the grade, so that the prepared mix is finished to a minimum of 2 inches below top of curb or adjacent walkway. Remove all debris and rocks and pebbles larger than 1 inch in size and level the grade before planting.

For all sod areas, spread a 2" deep layer of lawn sand prior to sodding. Remove all debris and rocks and pebbles larger than 1 inch in size and level the grade before sodding. Remove, if required, existing soil so that top of sod is flush with and adjacent top of curb or pavement.

SPACING OF PLANTS (SEE PLANT SPACING DETAIL)

1. Plants shall be planted sufficiently away from edges of pavements or curbs, to allow for growth toward the edges of the bed.

PROTECTION OF PLANTS

1. The Contractor shall be responsible to protect existing trees and shrubs in and adjacent to the area of work. Erect barriers as necessary to keep equipment and materials, any toxic material, away from the canopy drip line of trees and shrubs. DO NOT PILE SOIL OR DEBRIS AGAINST TREE TRUNKS OR DEPOSIT NOXIOUS BUILDING SUPPLIES OR CHEMICALS WITHIN THE DRIP LINE.

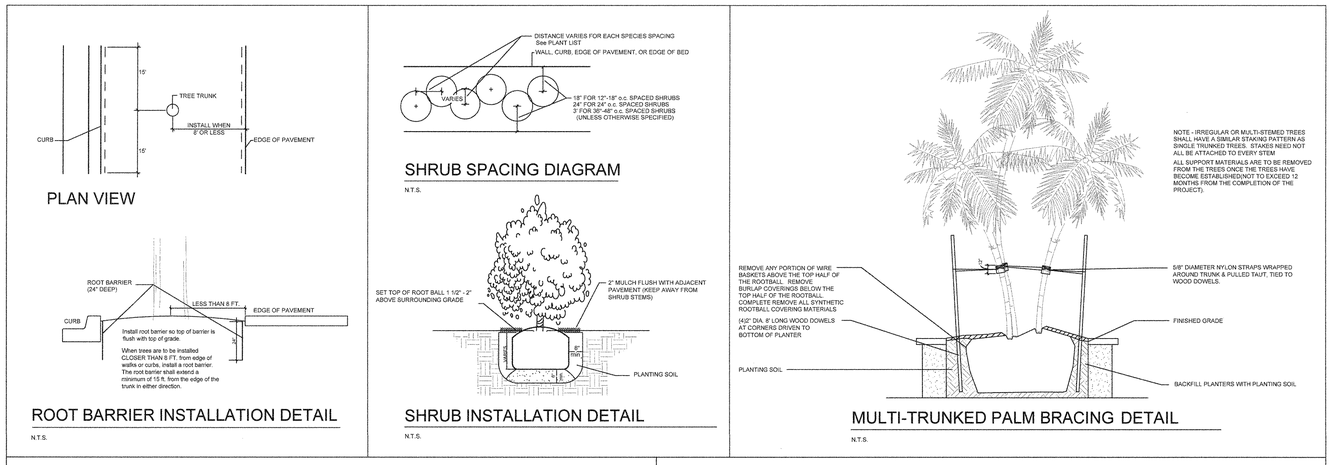

WOLFBERG ALVAREZ
ARCHITECTURE · ENGINEERING
3225 AVIATION AVE., SUITE 400
MIAMI, FLORIDA 33133
V 305.666.5474
F 305.666.4994
WOLFBERGALVAREZ.COM
AA 002416 EB 002354

ROSENBERG GARDNER DESIGN
LANDSCAPE ARCHITECTURE / LAND PLANNING
17670 NW 78th AVENUE, SUITE 201 MIAMI LAKES, FL 33015
PHONE: 305.820.1076 FAX: 305.820.1080 CORPORATE LICENSE#: LC0000288
www.ROSENBERGGARDNER.com

SEMINOLE AH-TAH-THI-KI VISITOR RESTROOM

34600 W BOUNDARY ROAD
CLEWISTON, FL 33440

SEAL
REGISTERED LANDSCAPE ARCHITECT TAYLOR KIEHL SEMLER LA 6667208 STATE OF FLORIDA

KIEHL SEMLER, ASLA
FL LANDSCAPE ARCHITECT
FL REG. NO. 6667208

WA PROJECT NO.: 21524.00

ISSUE DATE
05/27/2016

NO.	REVISION DATE

DRAWING TITLE
LANDSCAPE PLANS, SPECS, AND DETAILS

SHEET NUMBER
LA1.01

Z:\JBC Museum - Seminole Tribe\2016-5-27\LA SHEETS.dwg Jun 02, 2016 - 5:37pm KIEHL

To the best of the Architect's or Engineer's knowledge, the plans and specifications comply with the applicable minimum codes and the applicable fire-safety standards as determined by the local authority in accordance with F.B.C. section 110.3.7.4.4 and Chapter 633, Florida Statutes.

WOLFBERG ALVAREZ
ARCHITECTURE · ENGINEERING
3225 AVIATION AVE., SUITE 400
MIAMI, FLORIDA 33133
V 305.666.5474
F 305.666.4994
WOLFBERGALVAREZ.COM
AA 002416 EB 002354

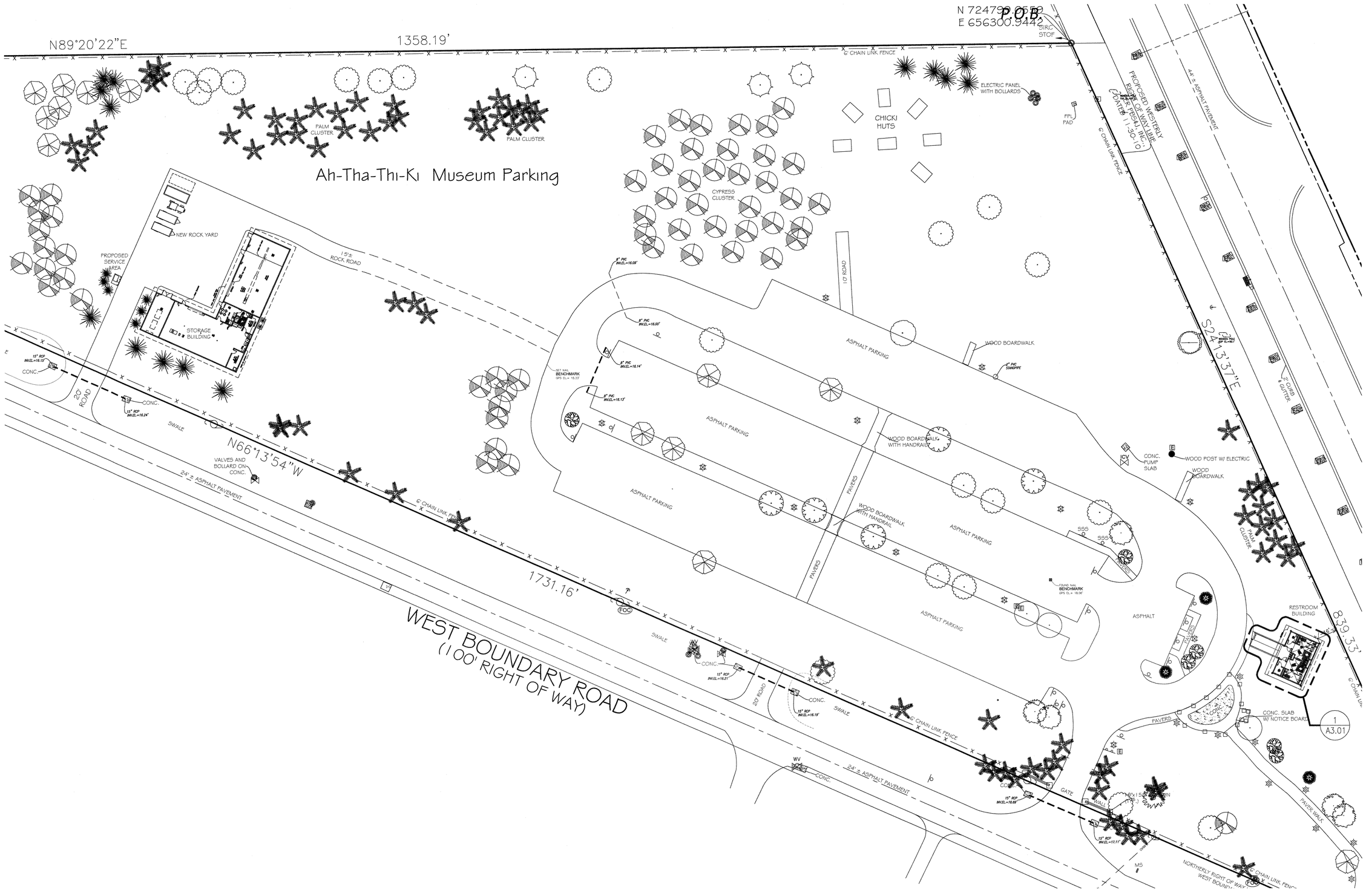

1 A2.01 OVERALL SITE PLAN
SCALE: 1"= 30'-0"

SEMINOLE AH-TAH-THI-KI VISITOR RESTROOM

34600 W BOUNDARY ROAD
CLEWISTON, FL 33440

P:\Seminoles Maintenance Building and Restrooms\2015\Drawings\CD\Visitor Restrooms\Architecture\A2.01-SVR.dwg Jun 02, 2016 - 3:55pm ZWETHINGTON

SEAL

MARCEL R. MOHLOTE, A.I.A.
FL ARCHITECT
FL ARCH. REG. NO. 9584

MAY 27, 2016

WA PROJECT NO.: 21524.00

ISSUE DATE
05/27/2016

NO.	REVISION DATE

DRAWING TITLE
OVERALL SITE PLAN

SHEET NUMBER
A2.01

To the best of the Architect's or Engineer's knowledge, the plans and specifications comply with the applicable minimum codes and the applicable fire-safety standards as determined by the local authority in accordance with F.B.C. section 110.3.7.4.4 and Chapter 633, Florida Statutes.

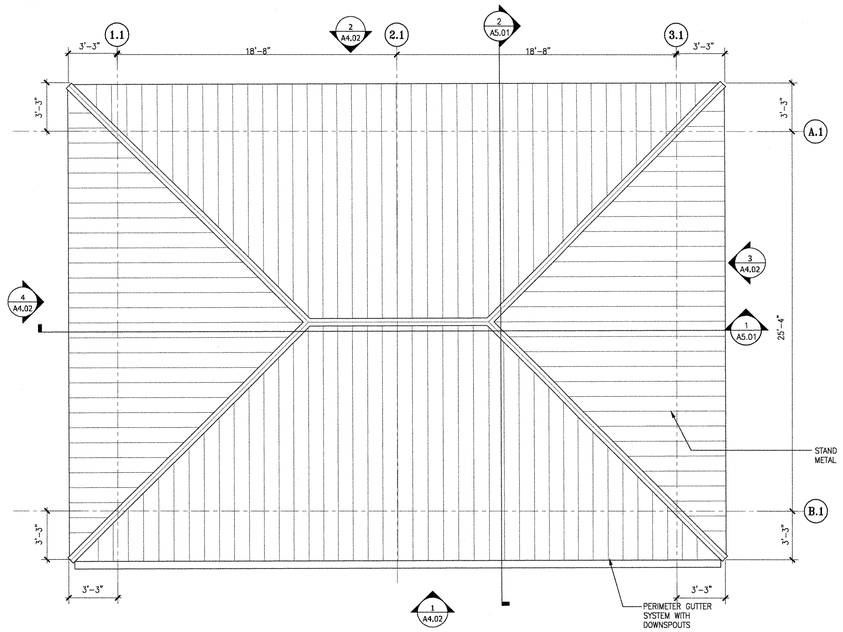

2 A3.01 RESTROOM BUILDING ROOF PLAN
SCALE: 1/4"=1'-0"

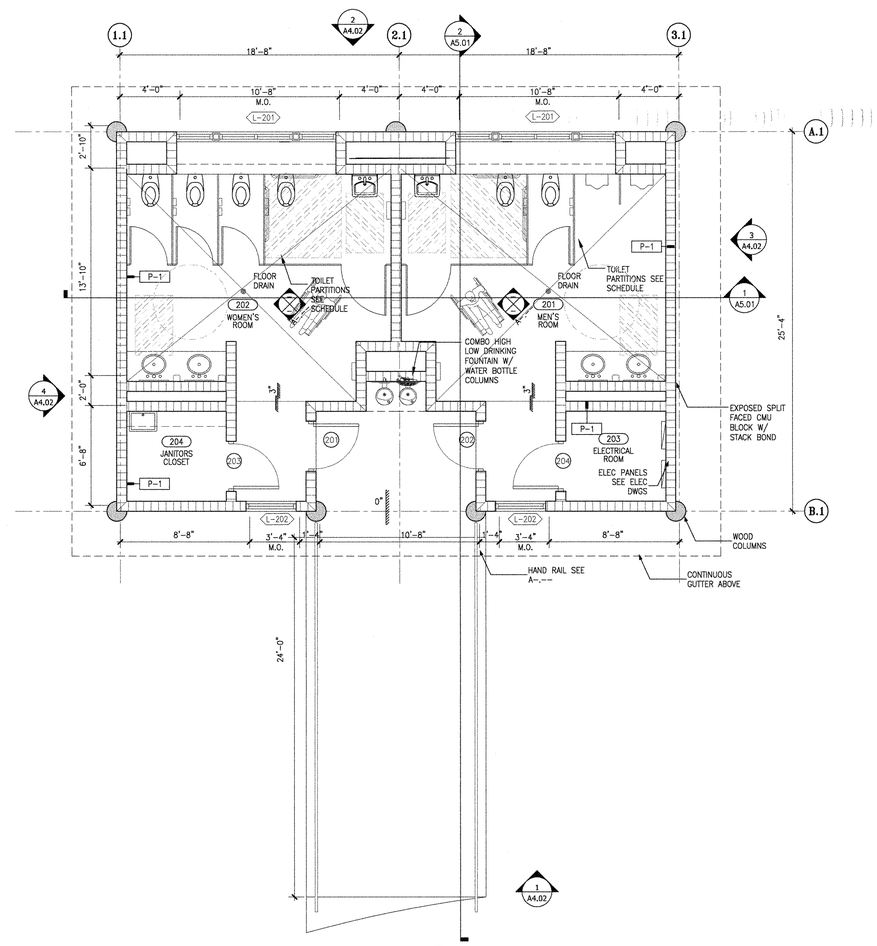

1 A3.01 RESTROOM BUILDING PLAN
SCALE: 1/4"=1'-0"

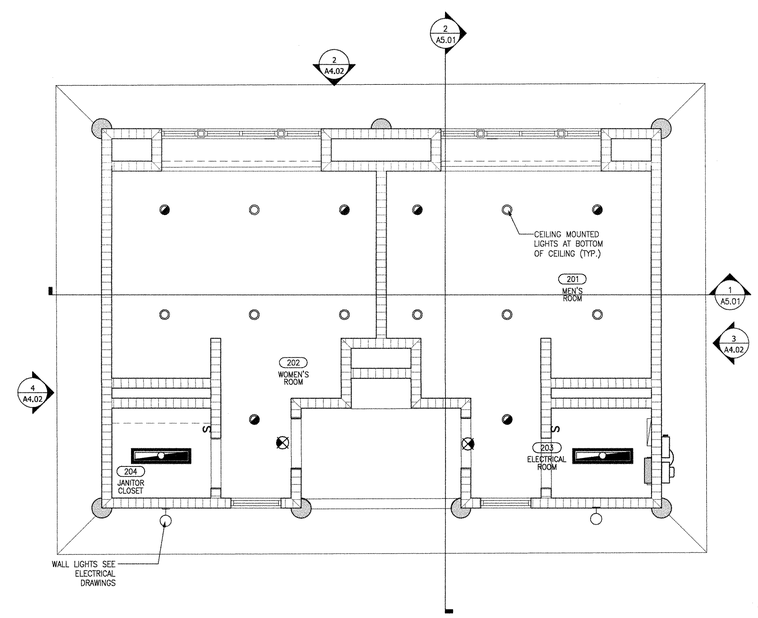

2 A3.01 RESTROOM BUILDING REFLECTED CEILING PLAN
SCALE: 1/4"=1'-0"

WOLFBERG ALVAREZ
ARCHITECTURE · ENGINEERING
3225 AVIATION AVE., SUITE 400
MIAMI, FLORIDA 33133
V 305.666.5474
F 305.666.4994
WOLFBERGALVAREZ.COM
AA 002416 EB 002354

SEMINOLE AH-TAH-THI-KI VISITOR RESTROOM

34600 W BOUNDARY ROAD
CLEWISTON, FL 33440

SEAL

MARCEL R. MORLOTE, A.I.A.
FL. ARCHITECT
FL. ARCH. REG. NO. 9564

WA PROJECT NO.: 21524.00

ISSUE DATE
05/27/2016

NO.	REVISION DATE

DRAWING TITLE
RESTROOM BUILDING PLANS

SHEET NUMBER
A3.01

P:\Seminoles Maintenance Building and Restrooms.2015\Drawings\CD\Visitor Restrooms\Architecture\A3.01 - SVR.dwg Jun 02, 2016 - 3:55pm ZWITHINGTON

To the best of the Architect's or Engineer's knowledge, the plans and specifications comply with the applicable minimum codes and the applicable fire-safety standards as determined by the local authority in accordance with F.B.C. section 110.3.7.4.4 and Chapter 633, Florida Statutes.

WOLFBERG ALVAREZ
ARCHITECTURE · ENGINEERING
3225 AVIATION AVE., SUITE 400
MIAMI, FLORIDA 33133
V 305.666.5474
F 305.666.4994
WOLFBERGALVAREZ.COM
AA 002416 EB 002354

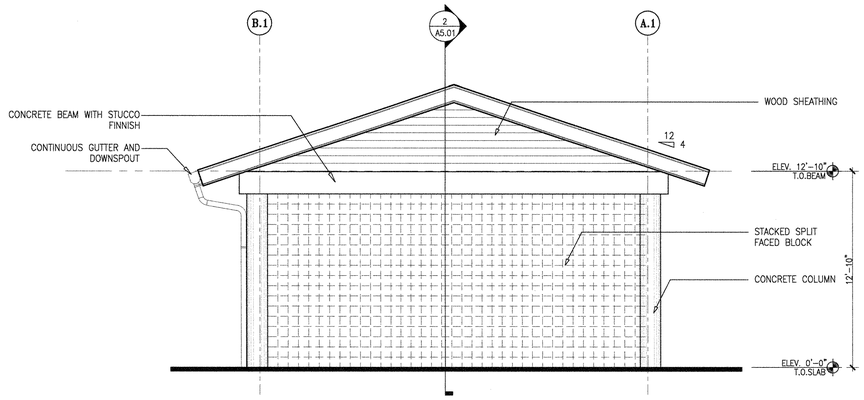

3 A4.01 RESTROOM BUILDING SOUTH ELEVATION
SCALE: 1/4"=1'-0"

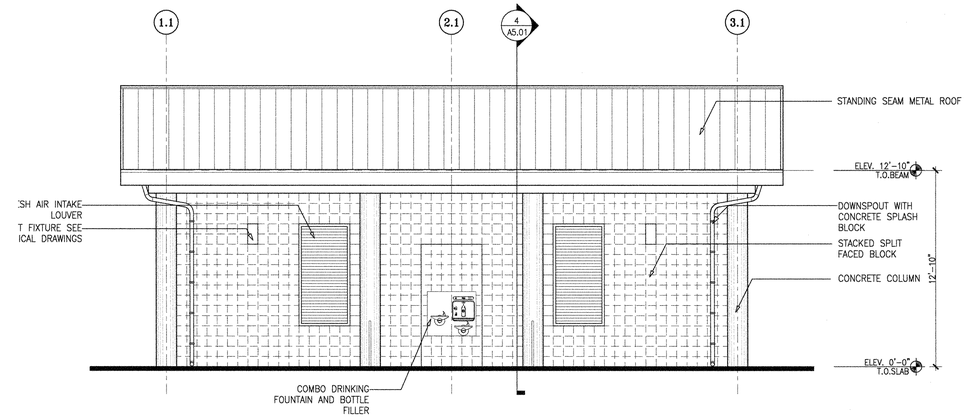

1 A4.01 RESTROOM BUILDING WEST ELEVATION
SCALE: 1/4"=1'-0"

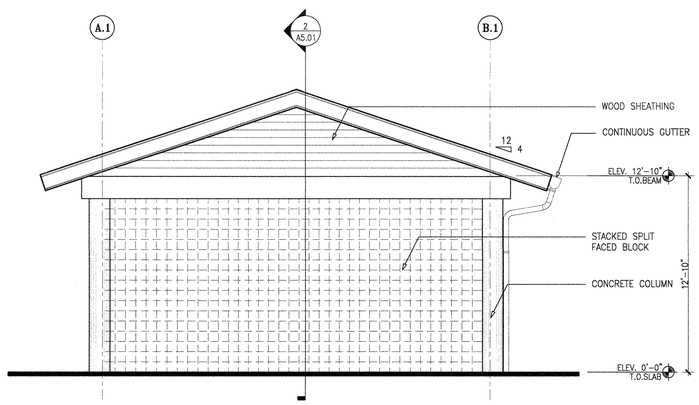

4 A4.01 RESTROOM BUILDING NORTH ELEVATION
SCALE: 1/4"=1'-0"

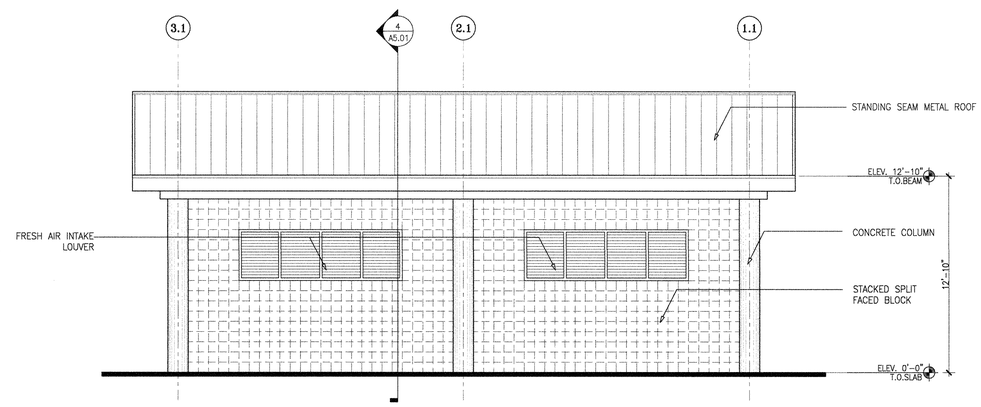

2 A4.01 RESTROOM BUILDING EAST ELEVATION
SCALE: 1/4"=1'-0"

SEMINOLE AH-TAH-THI-KI VISITOR RESTROOM

34600 W BOUNDARY ROAD
CLEWISTON, FL 33440

SEAL

MARCEL R. MORLOTE, A.I.A.
FL. ARCHITECT
FL. ARCH. REG. NO. 8564

WA PROJECT NO.: 21524.00

ISSUE DATE
05/27/2016

NO.	REVISION DATE

DRAWING TITLE
RESTROOM BUILDING ELEVATIONS

SHEET NUMBER
A4.01

P:\Seminoles Maintenance Building and Restrooms.2015\Drawings\CD\Visitor Restrooms\Architecture\A4.01-SVR.dwg Jun 02, 2016 - 3:55pm ZMCTHINGTON

To the best of the Architect's or Engineer's knowledge, the plans and specifications comply with the applicable minimum codes and the applicable fire-safety standards as determined by the local authority in accordance with F.B.C. section 110.3.7.4.4 and Chapter 633, Florida Statutes.

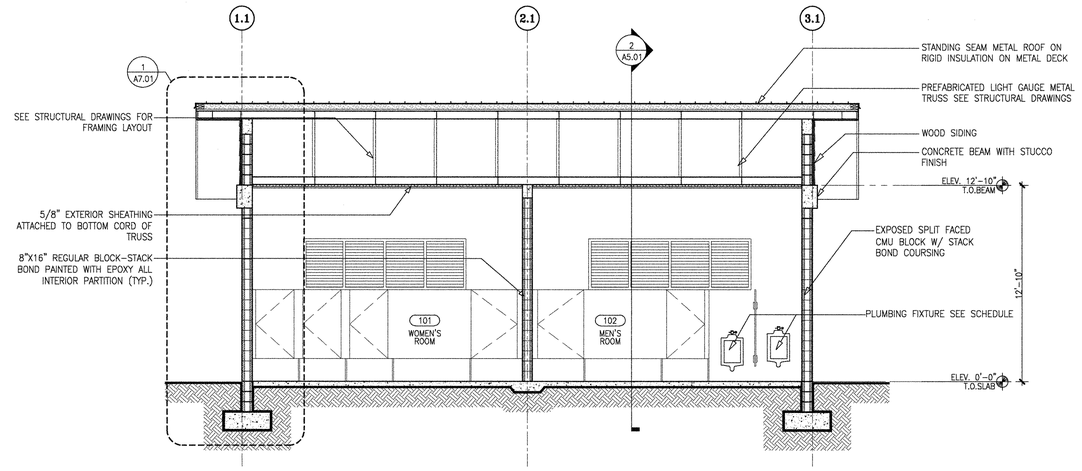

1 A5.01 RESTROOM BUILDING SECTION
SCALE: 3/8"=1'-0"

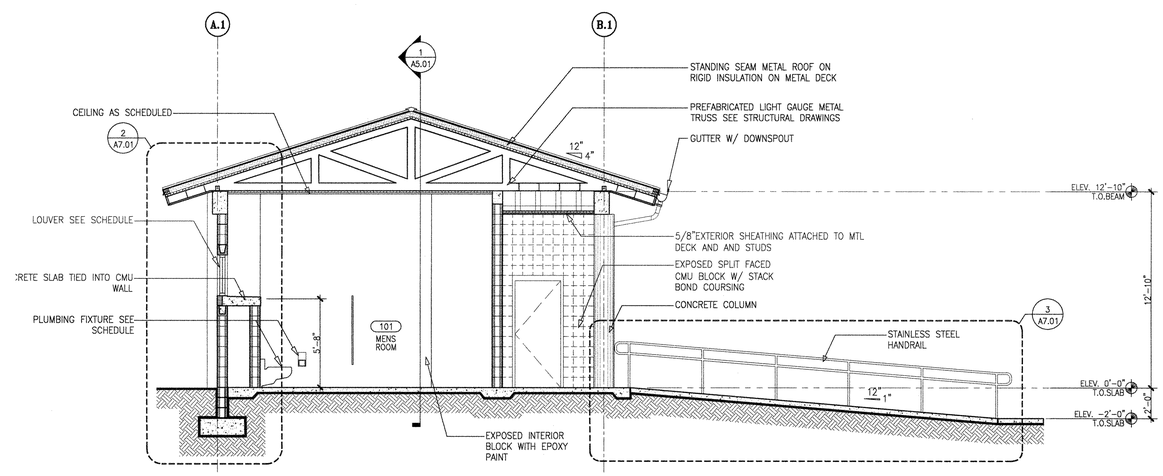

2 A5.01 RESTROOM BUILDING SECTION
SCALE: 3/8"=1'-0"

WOLFBERG ALVAREZ
ARCHITECTURE · ENGINEERING
3225 AVIATION AVE., SUITE 400
MIAMI, FLORIDA 33133
V 305.666.5474
F 305.666.4994
WOLFBERGALVAREZ.COM
AA 002416 EB 002354

SEMINOLE AH-TAH-THI-KI VISITOR RESTROOM

34600 W BOUNDARY ROAD
CLEWISTON, FL 33440

SEAL

MARCEL R. MORLOTE, A.I.A.
FL. ARCHITECT
FL. ARCH. REG. NO. 9684

MAY 27 2016

WA PROJECT NO.: 21524.00

ISSUE DATE
05/27/2016

NO.	REVISION DATE

DRAWING TITLE
RESTROOM BUILDING SECTIONS

SHEET NUMBER
A5.01

P:\Seminoles Maintenance Building and Restrooms 2015\Drawings\CD\Visitor Restrooms\Architecture\A5.01-SVR.dwg Jun 02, 2016 - 3:56pm ZWETHINGTON

To the best of the Architect's or Engineer's knowledge, the plans and specifications comply with the applicable minimum codes and the applicable fire-safety standards as determined by the local authority in accordance with F.B.C. section 110.3.7.4.4 and Chapter 633, Florida Statutes.

WOLFBERG ALVAREZ
ARCHITECTURE · ENGINEERING
3225 AVIATION AVE., SUITE 400
MIAMI, FLORIDA 33133
V 305.666.5474
F 305.666.4994
WOLFBERGALVAREZ.COM
AA 002416 EB 002354

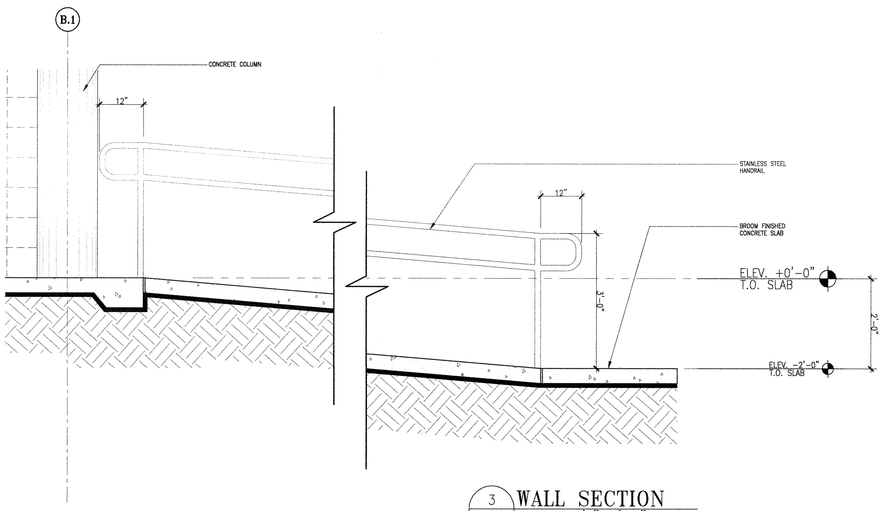

3 A7.01 WALL SECTION
SCALE: 3/4"=1'-0"

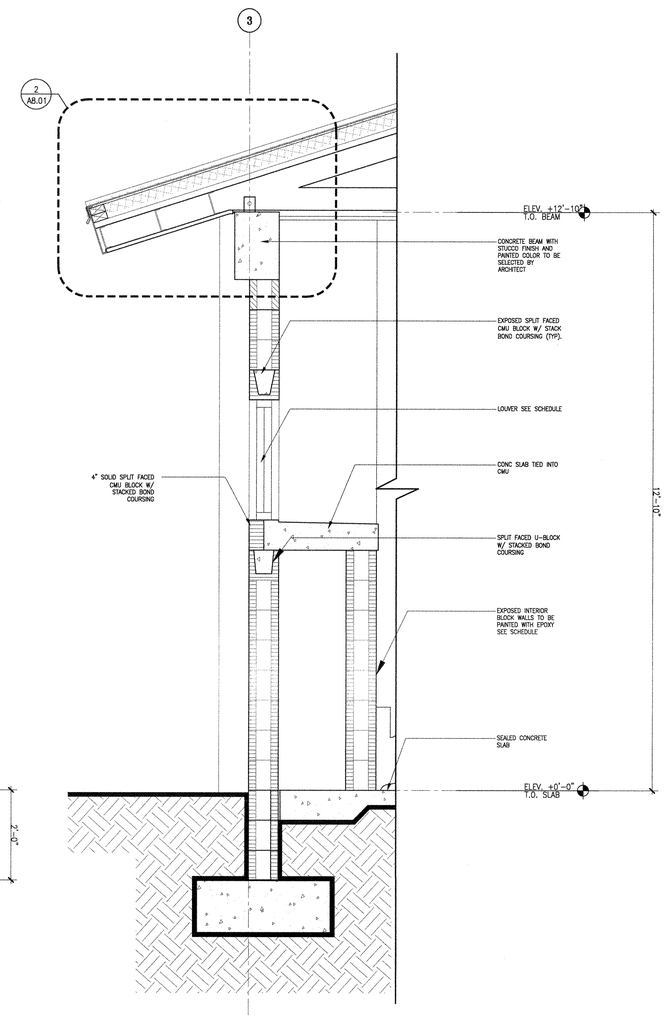

2 A7.01 WALL SECTION
SCALE: 3/4"=1'-0"

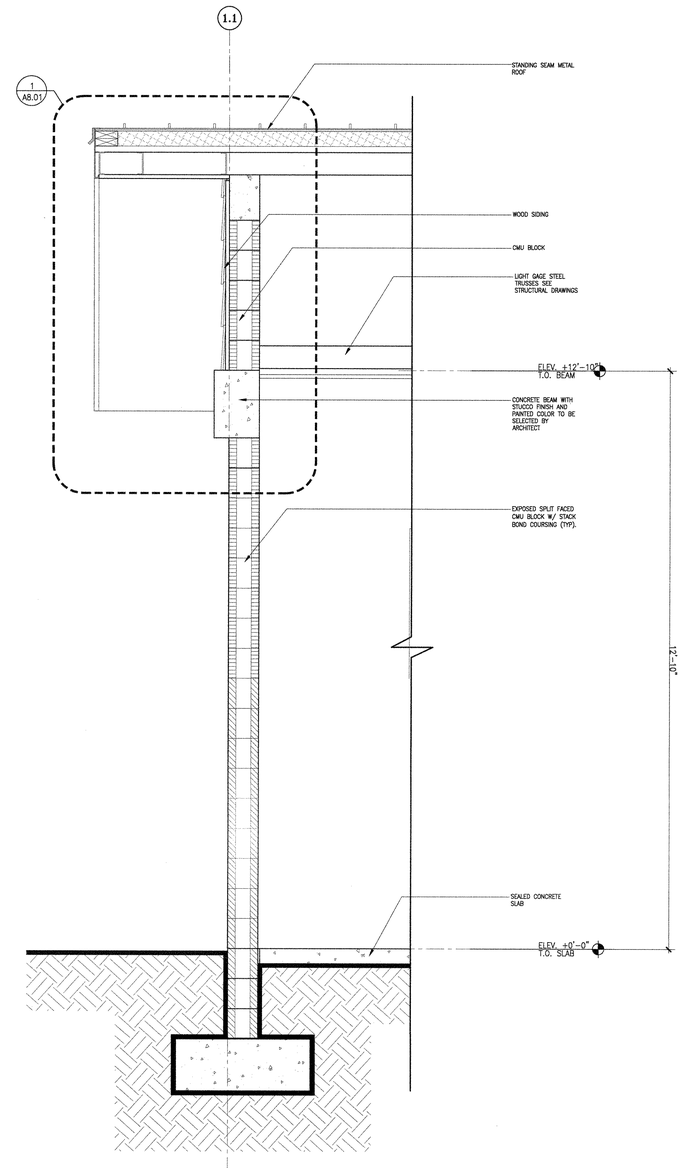

1 A7.01 WALL SECTION
SCALE: 3/4"=1'-0"

SEMINOLE AH-TAH-THI-KI VISITOR RESTROOM

34600 W BOUNDARY ROAD
CLEWISTON, FL 33440

SEAL

MARCEL R. MORLOTE, A.I.A.
FL. ARCHITECT
FL. ARCH. REG. NO. 9564

WA PROJECT NO.: 21524.00

ISSUE DATE
05/27/2016

NO.	REVISION DATE

DRAWING TITLE
WALL SECTIONS

SHEET NUMBER
A7.01

P:\Seminoles Maintenance Building and Restrooms.2015\Drawings\GD\Visitor Restrooms\Architecture\A7.01-SVR.dwg Jun 02, 2016 - 4:03pm - DMETHINGTON

To the best of the Architect's or Engineer's knowledge, the plans and specifications comply with the applicable minimum codes and the applicable fire-safety standards as determined by the local authority in accordance with F.B.C. section 110.3.7.4.4 and Chapter 633, Florida Statutes.

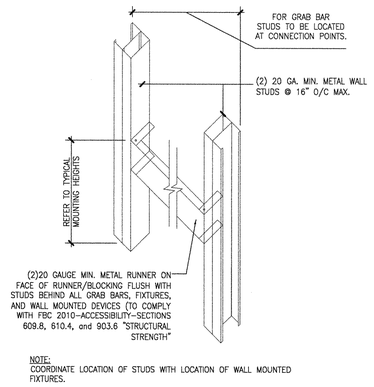

NOTE:
COORDINATE LOCATION OF STUDS WITH LOCATION OF WALL MOUNTED FIXTURES.

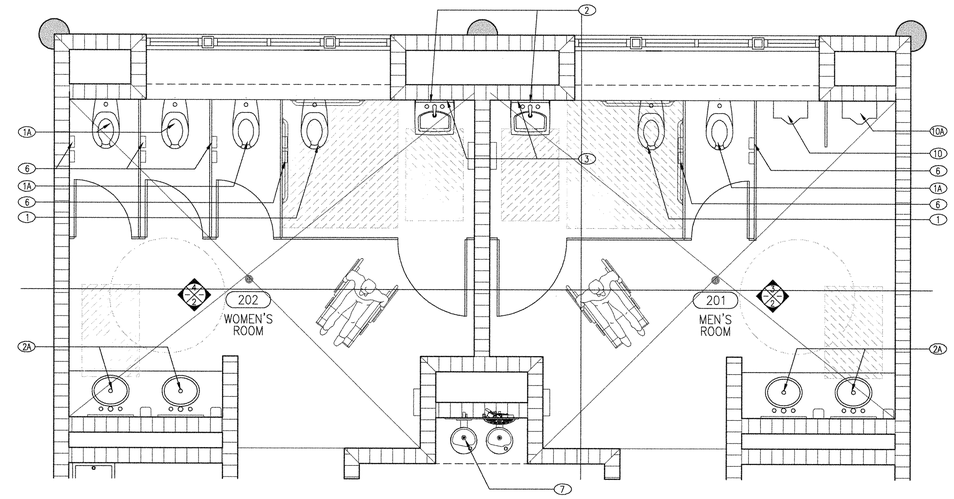

1 A7.02 RESTROOM PLAN
SCALE: 3/8"= 1'-0"

GENERAL NOTES
1. REFER TYPICAL ADA DIMENSIONS ON FIXTURES

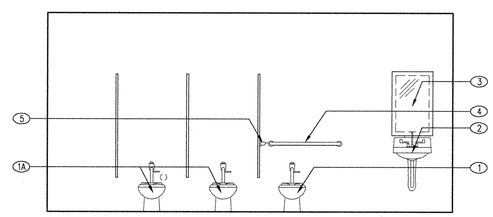

4 A7.02 INTERIOR ELEVATION
SCALE: 3/8"= 1'-0"

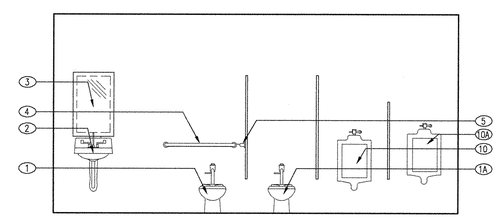

3 A7.02 INTERIOR ELEVATION
SCALE: 3/8"= 1'-0"

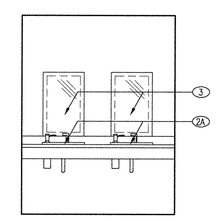

2 A7.02 INTERIOR ELEVATION
SCALE: 3/8"= 1'-0"

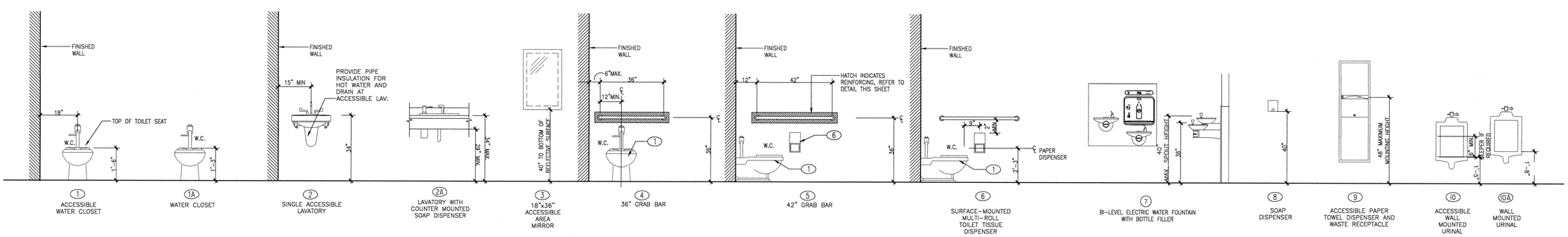

5 A7.02 FIXTURES & EQUIPMENT ELEVATION
SCALE: 1/2"= 1'-0"

To the best of the Architect's or Engineer's knowledge, the plans and specifications comply with the applicable minimum codes and the applicable fire–safety standards as determined by the local authority in accordance with F.B.C. section 110.3.7.4.4 and Chapter 633, Florida Statutes.

WOLFBERG ALVAREZ
ARCHITECTURE ENGINEERING
3225 AVIATION AVE., SUITE 400
MIAMI, FLORIDA 33133
V 305.666.5474
F 305.666.4994
WOLFBERGALVAREZ.COM
AA 002416 EB 002354

SEMINOLE AH-TAH-THI-KI VISITOR RESTROOM

34600 W BOUNDARY ROAD
CLEWISTON, FL 33440

P:\Seminoles Maintenance Building and Restrooms 2015\Drawings\CD\Visitor Restrooms\Architecture\A7.02-SVR.dwg Jun 02, 2016 - 3:57pm ZWETHINGTON

SEAL
REGISTERED ARCHITECT MARCEL R. MORLOTE FLORIDA
MAY 27 2016

MARCEL R. MORLOTE, A.I.A.
FL. ARCHITECT
FL. ARCH. REG. NO. 9564

WA PROJECT NO.: 21524.00

ISSUE DATE
05/27/2016

NO.	REVISION DATE

DRAWING TITLE
RESTROOM ELEVATIONS AND EQUIPMENT

SHEET NUMBER
A7.02

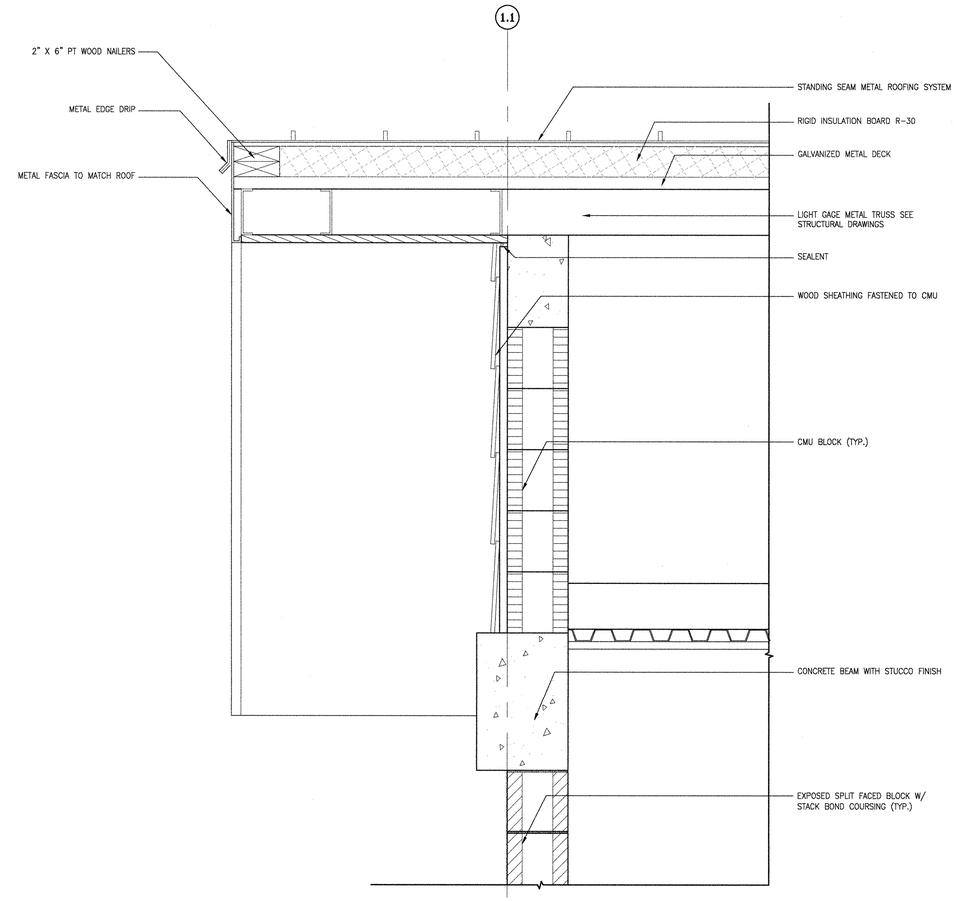

1 / A8.01 SECTION DETAIL
SCALE: 1 1/2" =1'-0"

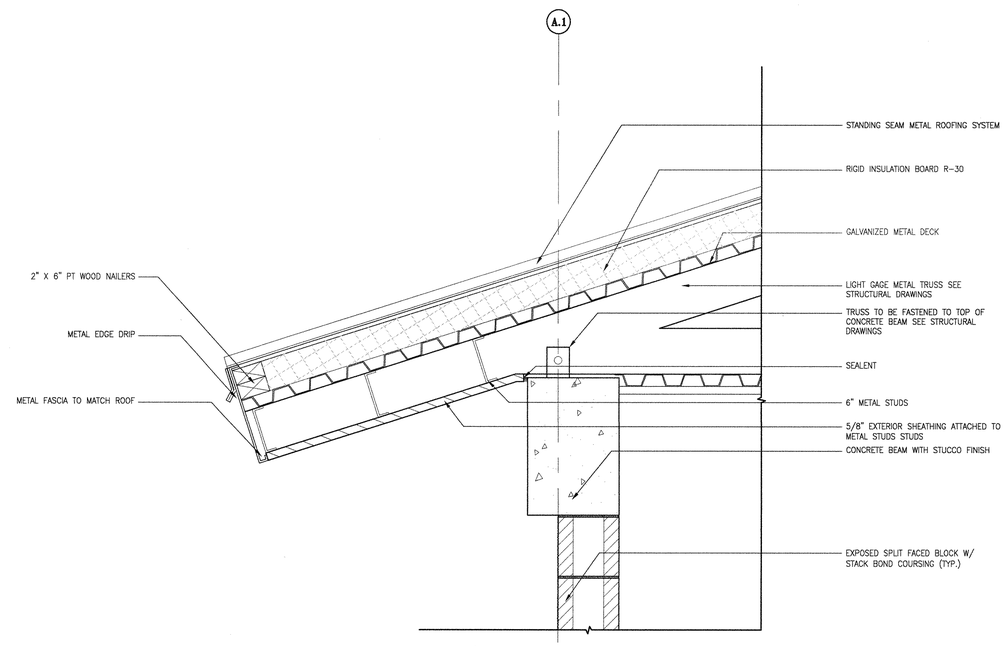

2 / A8.01 SECTION DETAIL
SCALE: 1 1/2" =1'-0"

WOLFBERG ALVAREZ
ARCHITECTURE ENGINEERING
3225 AVIATION AVE., SUITE 400
MIAMI, FLORIDA 33133
V 305.666.5474
F 305.666.4994
WOLFBERGALVAREZ.COM
AA 002416 EB 002354

SEMINOLE AH-TAH-THI-KI VISITOR RESTROOM

34600 W BOUNDARY ROAD
CLEWISTON, FL 33440

SEAL

REGISTERED ARCHITECT MARCEL R. MORLOTE FLORIDA LICENSE
MAY 27 2016

MARCEL R. MORLOTE, A.I.A.
FL ARCHITECT
FL ARCH. REG. NO. 9584

WA PROJECT NO.: 21524.00

ISSUE DATE
05/27/2016

NO.	REVISION DATE

DRAWING TITLE
DETAILS

SHEET NUMBER
A8.01

P:\Seminoles Maintenance Building and Restrooms\2015\Drawings\CD\Visitor Restrooms\Architecture\A8.01-SVR.dwg Jun 02, 2016 - 3:58pm ZWETHINGTON

To the best of the Architect's or Engineer's knowledge, the plans and specifications comply with the applicable minimum codes and the applicable fire-safety standards as determined by the local authority in accordance with F.B.C. section 110.3.7.4.4 and Chapter 633, Florida Statutes.

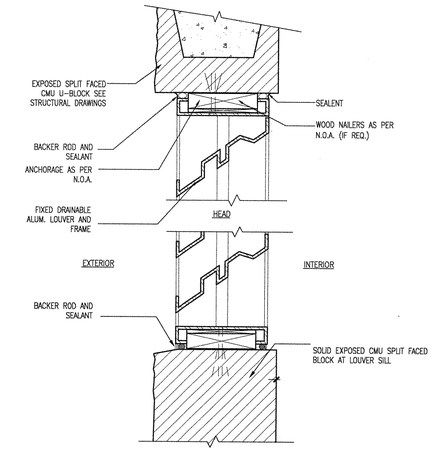

1 / A8.02 LOUVER DETAIL
SCALE: 3" =1'-0"

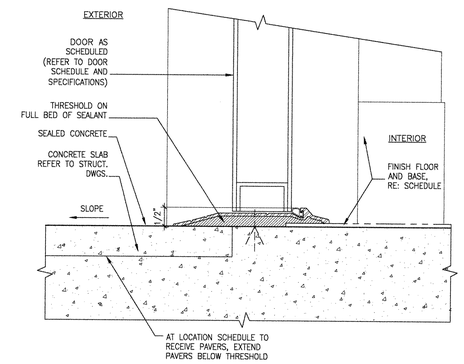

2 / A8.02 THREASHOLD DETAIL
SCALE: 3" =1'-0"

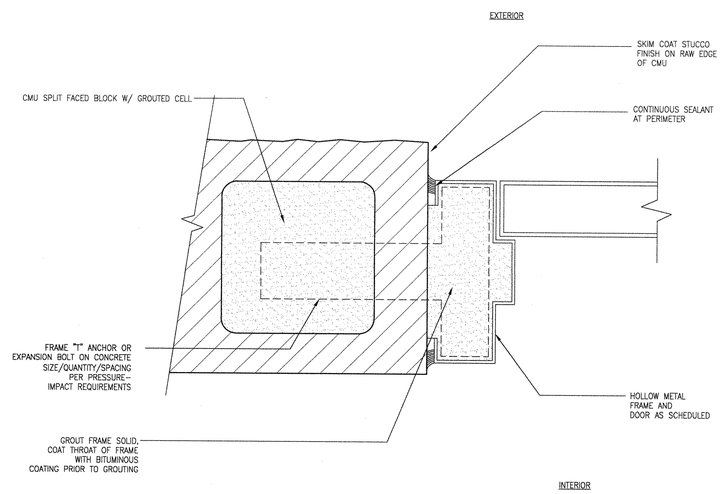

3 / A8.02 DOOR DETAIL
SCALE: 1 1/2" =1'-0"

To the best of the Architect's or Engineer's knowledge, the plans and specifications comply with the applicable minimum codes and the applicable fire-safety standards as determined by the local authority in accordance with F.B.C. section 110.3.7.4.4 and Chapter 633, Florida Statutes.

WOLFBERG ALVAREZ
ARCHITECTURE · ENGINEERING
3225 AVIATION AVE., SUITE 400
MIAMI, FLORIDA 33133
V 305.666.5474
F 305.666.4994
WOLFBERGALVAREZ.COM
AA 002416 EB 002354

SEMINOLE AH-TAH-THI-KI VISITOR RESTROOM

34600 W BOUNDARY ROAD
CLEWISTON, FL 33440

P:\Seminoles Maintenance Building and Restrooms-2015\Drawings\CD\Visitor Restrooms\Architecture\A8.02-SVR.dwg Jun 02, 2016 - 3:58pm ZWETHINGTON

SEAL

REGISTERED ARCHITECT MARCEL R. MOSLOTE STATE OF FLORIDA
MAY 27, 2016

MARCEL R. MOSLOTE, A.I.A.
FL. ARCHITECT
FL. ARCH. REG. NO. 9584

WA PROJECT NO.: 21524.00

ISSUE DATE
05/27/2016

NO.	REVISION DATE

DRAWING TITLE
DETAILS

SHEET NUMBER
A8.02

RESTROOM BUILDING

DOOR TYPE				DOOR SIZE		REQUIREMENTS	
MARK	TYPE	MATERIAL	FRAME	WIDTH X HEIGHT	DETAIL	THRESH	REMARKS
201	I	H.M.	H.M.	3'–0" x 7'–0"	3/A8.02	2/A8.02	–
202	I	H.M.	H.M.	3'–0" x 7'–0"	3/A8.02	2/A8.02	–
203	I	H.M.	H.M.	3'–0" x 7'–0"	3/A8.02	2/A8.02	10"X10" GRILLE
204	I	H.M.	H.M.	3'–0" x 7'–0"	3/A8.02	2/A8.02	10"X10" GRILLE

LOUVER SCHEDULE

MARK	SIZE (W x H)	TYPE	REMARKS
L–201	10'–8" x 3'–4"	ALUMINUM	
L–202	3'–4" x 6'–8"	ALUMINUM	

GENERAL DOOR NOTES

1. ALL EXTERIOR DOORS SHALL HAVE MIAMI–DADE COUNTY NOTICE OF ACCEPTANCE (NOA) OR FLORIDA PRODUCT APPROVAL
2. ALL LABELED AND SMOKE DOORS TO HAVE CLOSER AND POSITIVE LATCH.
3. ALL THRESHOLDS SHALL BE ADA COMPLIANT. APPROVAL (HVHZ) FOR LARGE MISSILE IMPACT RESISTANCE, WIND PRESSURE, AND WATER INFILTRATION
4. PROVIDE 3/4" UNDERCUT AT ALL INTERIOR DOORS UNLESS OTHERWISE NOTED. REQUIREMENTS. REFER TO STRUCTURAL DRAWINGS FOR WIND PRESSURES.
5. FIELD VERIFY SIZE OF EXISTING OPENING. SUBSTRATE/ ATTACHMENT TO COMPLY WITH NOA REQUIREMENTS. VERIFY THAT COILING MECHANISM FITS INTO EXISTING HEADER SPACE.

GENERAL NOTES:

1. ALL EXTERIOR LOUVERS ARE RATED FOR IMPACT SHALL COMPLY WITH STATE OF FLORIDA PRODUCT APPROVAL – N.O.A. FOR IMPACT RESISTANCE AND PRESSURE REQUIREMENTS. LARGE MISSILE IMPACT FOR LOUVERS LOCATED UP TO 30'–0" ABOVE GRADE (ANY PART OF THE LOUVER). REFER TO STRUCTURAL DRAWINGS FOR WIND PRESSURES.
2. ALL ALUMINUM SHALL BE POWDER COATED IN COLOR SELECTED BY ARCHITECT.
3. CONTRACTOR TO COORDINATE EXACT ROUGH OPENING REQUIREMENTS W/ N.O.A OF SELECTED MANUFACTURER. DIMENSIONS NOTED ARE NOMINAL AND COURSE WITH CMU UNITS.
4. PROVIDE INSECT SCREENS FOR ALL LOUVERS

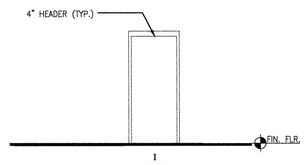

1
HM FLUSH
IMPACT
RESISTANT

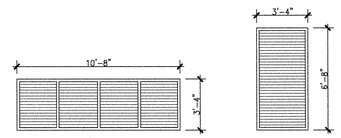

L–201
ALUMINUM LOUVER
IMPACT RESISTANT

L–202
ALUMINUM LOUVER
IMPACT RESISTANT

ROOM FINISH SCHEDULE

	DESIGNATION	FLOORS	BASE	WALLS	CEILING	REMARKS
ROOM No:	ROOM NAME	MATERIAL/FINISH	MATERIAL/FINISH	MATERIAL/FINISH	MATERIAL/FINISH	
RESTROOM BUILDING						
201	MEN'S RESTROOM	SEALED CONCRETE	RESIN BASE	PAINTED	GYP.BD./PAINTED	EPOXY PAINT
202	WOMEN'S RESTROOM	PORCELAIN TILE	PORCELAIN TILE	PAINTED	GYP.BD./PAINTED	EPOXY PAINT
203	ELECTRICAL ROOM	SEALED CONCRETE	–	PAINTED	EXPOSED	
204	JANITORS CLOSET	SEALED CONCRETE	PORCELAIN TILE	PAINTED	EXPOSED	

porcelain tile
porcelain tile
porcelain tile

WOLFBERG ALVAREZ
ARCHITECTURE ENGINEERING
3225 AVIATION AVE., SUITE 400
MIAMI, FLORIDA 33133
V 305.666.5474
F 305.666.4994
WOLFBERGALVAREZ.COM
AA 002416 EB 002354

SEMINOLE AH-TAH-THI-KI
VISITOR RESTROOM
34600 W BOUNDARY ROAD
CLEWISTON, FL 33440

SEAL
MAY 27 2016

MARCEL R. MORLOTE, A.I.A.
FL ARCHITECT
FL ARCH. REG. NO. 9584

WA PROJECT NO.: 21524.00

ISSUE DATE
05/27/2016

NO.	REVISION DATE

DRAWING TITLE
SCHEDULES

SHEET NUMBER
A9.01

P:\Seminoles Maintenance Building and Restrooms 2015\Drawings\CD\Visitor Restrooms\Architecture\A9.01 – SVR.dwg Jun 02, 2016 – 3:58pm ZWITHINGTON

To the best of the Architect's or Engineer's knowledge, the plans and specifications comply with the applicable minimum codes and the applicable fire–safety standards as determined by the local authority in accordance with F.B.C. section 110.3.7.4.4 and Chapter 633, Florida Statutes.

STRUCTURAL NOTES

GENERAL NOTES

1. The governing Code for this Project is the Florida Building Code, 2014 Edition. This Code prescribes which edition of each referenced standard applies to this Project.
2. To the best of our knowledge, the Structural Drawings and Specifications comply with the applicable requirements of the governing Building Code.
3. Construction is to comply with the requirements of the governing Building Code and all other applicable Federal, State, and Local Codes, Standards, Regulations and Laws.
4. The Structural Documents are to be used in conjunction with the Architectural Documents. Use these Notes in conjunction with the Project Specifications. If a conflict exists, the more stringent governs.
5. See Project Specifications for testing.
6. Details labeled "typical" apply to all situations that are the same or similar to those specifically referenced, whether or not they are keyed in at each location. Questions regarding the applicability of typical details shall be resolved by the Architect.
7. Openings shown on Structural Drawings are only pictorial. See the Architectural and M.E.P. drawings for the size and location of openings in the structure.
8. Contractors who discover discrepancies, omissions or variations in the Contract Documents during bidding shall immediately notify the Architect. The Architect will resolve the condition and issue a written clarification.
9. The General Contractor shall coordinate all Contract Documents with field conditions and dimensions and Project Shop Drawings prior to construction. Do not scale drawings; use only printed dimensions. Report any discrepancies in writing to the Architect prior to proceeding with work. Do not change size or location of structural members without written instructions from the Structural Engineer of Record.
10. The Contractor shall protect adjacent property, his own work and the public from harm. The Contractor is solely responsible for construction means and methods, and jobsite safety including all OSHA requirements.
11. The Structure is designed to be structurally sound when completed. Prior to completion, the Contractor is responsible for stability and temporary bracing, including, but not limited to, masonry walls. Wherever the Contractor is unsure of these requirements, the Contractor shall retain a Florida Licensed Engineer to design and inspect the temporary bracing and stability of the structure.
12. Design Superimposed Loads:

OCCUPANCY	LIVE LOAD*	DEAD LOAD
Roof	20 psf	20 psf

Design superimposed dead loads listed above do not include masonry walls or other concentrated loads. See architectural drawings for these loads.

13. Design Wind Loads

Governing Code	ASCE 7-10
Building Risk Category	II
Ultimate Wind Speed	Vult = 149 mph
Mean Roof Height	20 feet
Directionality Factor	Kd = 0.85
Exposure	C
Internal Pressure Coefficient	GCpi = ±0.18

SHOP DRAWINGS AND OTHER SUBMITTALS

1. Submittals for special structural, load-carrying items that are required by Codes or Standards to resist forces must be prepared by, or under the direct supervision of, a Delegated Engineer. Examples include Structural Light Gage Steel Framing and Exterior Enclosure Systems
2. A Delegated Engineer is defined as a Florida Licensed Engineer who specializes in and undertakes the design of Structural Components or Structural Systems included in a specific submittal prepared for this Project and is an employee or officer of, or consultant to, the Contractor or Fabricator responsible for the submittal. The Delegated Engineer shall sign, seal and date the submittal, including calculations and drawings. See Specifications for more specific criteria.
3. The Trade Contractor is responsible for confirming and correlating dimensions at the job sites, for tolerances, clearances, quantities, fabrication processes and techniques of construction, coordination of the work with other trades and full compliance with the Contract Documents.
4. The General Contractor/Construction Manager shall review and approve submittals and shall sign and date each drawing prior to submitting to the Architect. This approval is to confirm that the Submittal is complete, complies with the Submittal Requirements and is coordinated with field dimensions, other trades, erection sequencing and constructibility.
5. The Structural Engineer reviews submittals to confirm that the submittal is in general conformance with the design concept presented in the Contract Documents. Quantities and dimensions are not checked. Notations on submittals do not authorize changes to the contract sum. Checking of the submittal by the Structural Engineer shall not relieve the Contractor of responsibility for deviations from the Contract Documents and from errors or omissions in the submittal.
6. In addition to the above, the Structural Engineer's review of Delegated Engineer submittals is limited to verifying that the specified structural submittal has been furnished, signed and sealed by the Delegated Engineer and that the Delegated Engineer has understood the design intent and used the specified Structural Criteria. No detailed check of calculations will be made. The Delegated Engineer is solely responsible for his/her design, including but not limited to the accuracy of his/her calculations and compliance with the applicable codes and standards.
7. CAD files of Structural Drawings may be used as an aid in preparing Shop Drawings only upon the Contractor signing an Agreement. When CAD files or copies of the Structural Drawings are made available, it is under the following conditions:
   - A. All information contained in the CAD files or copies of the Structural Drawings are instruments of service of the Architect/Engineer and shall not be used for other projects, additions to the Project or the completion of the Project by others. CAD files and copies of the Structural Drawings remain the property of Bliss & Nyitray, Inc. and in no case shall their transfer be considered a sale;
   - B. CAD files or copies of the Structural Drawings are not Contract Documents. In the event of a conflict, the Structural Drawings shall govern;
   - C. The use of CAD files or copies of the Structural Drawings shall not in any way relieve the Contractor's responsibility for proper checking and coordination of dimensions, details, sizes and quantities of materials as required for the preparation of complete and accurate Shop Drawings; and
   - D. The Contractor shall revise all references to Contract Document sheet numbers and section marks and shall remove information that is not required for their work from the CAD files or copies of the Structural Drawings, including the Title Block.
   - E. Dimensions in the CAD files may not be precise and, in some cases, have been intentionally altered for presentation purposes. Do not scale dimensions electronically or otherwise.

SHALLOW FOUNDATIONS

1. Foundation design, soil preparation and compaction are based on Geotechnical Investigation, Data and Recommendations in Report **#15-0895.00** by GFA International dated 6/30/2015.
2. Footing sizes and reinforcing are based on an assumed allowable soil bearing capacity of 2500 psf. All footings shall bear on compacted fill prepared per the Geotechnical Report.
3. Subgrade preparation shall be field controlled and tested by a Licensed Soils Engineer in accordance with the Geotechnical Report. At completion, that Engineer shall prepare and submit to the Owner, Architect, Contractor and Structural Engineer a signed and sealed letter indicating that the recommendations of the Geotechnical Report have been followed.
4. Center all footings under their respective columns or walls, u.o.n.
5. Top of all footings is 2'-0" below the ground floor level, u.o.n.

EXCAVATION, BACKFILL AND DEWATERING

1. The Contractor is solely responsible for all excavation procedures including lagging, shoring, and protection of adjacent property, structures, streets and utilities in accordance with the requirements of the local building department and OSHA regulations. Do not excavate within one foot of the angle of repose of any soil bearing foundation unless the foundation is properly protected against settlement.
2. Do not backfill against walls until 7 days after the walls are braced by the structure or are temporarily braced. Do not backfill cantilevered retaining walls until concrete is 7 days old. Do not backfill until after completion and inspection of any waterproofing.
3. The Contractor is responsible for the disposal of all accumulated water in a manner that does not inconvenience or damage the work.

SLABS ON GRADE

1. Refer to Geotechnical Report for subgrade preparation more than 12" below bottom of slab.
2. Above subgrade, use fill containing not more than 10% passing #200 sieve and maximum 1 inch diameter. Compact to 95% of maximum dry density as determined by modified proctor ASTM D-1557. Each layer of fill shall not exceed 6" loose thickness. Compact prior to placement of the next layer.
3. Fill placement and compaction shall be monitored and accepted by the testing agency. Take a min. of one field density test (ASTM D-1556 or D-2922) for each 2,500 square feet of each layer. The testing agency shall randomly select test locations.
4. For interior slabs place 10 mil polyethylene sheeting between soil and bottom of slab. Do not use any sheeting below exterior concrete slabs.
5. Use 4" thick slabs on grade reinforced with 6 x 6 - W2.9 x W2.9 welded wire reinforcement supplied in flat sheets only. Use chairs to support wire fabric in the center of slab.
6. Place concrete in long-strip construction method. Provide crack control joints at 15 feet maximum to limit areas between joints to 225 sq. ft. in all floating slabs on grade. Locate to conform to bay spacing whenever possible, add crack control joints at re-entrant corners which tend to invite cracks.
7. In sidewalks and walkways, locate isolation joints at 20 ft. o.c. maximum score and tool between isolation joints in equal bays of 5 ft. or less.
8. See the Architectural Drawings for slab on grade depressions and other requirements.

REINFORCED CONCRETE

1. Comply with ACI 301 and 318 and Specification Sections 032000 and 033000.
2. Provide structural concrete with a minimum ultimate compressive design strength of 3,000 psi in 28 days.
3. Use normal weight concrete for all structural members. u.o.n.
4. Provide ASTM A-615 Grade 60 reinforcing steel. Reinforcing shall be accurately placed, rigidly supported and firmly tied in place, with appropriate bar supports and spacers. Lap continuous reinforcing 48 bar dia. Provide cover over reinforcing as follows:

Element	Bottom	Top	Sides
Footings	3"	2"	3"
Beams Above Grade	1 1/2"	1 1/2"	1 1/2"
Columns	-	-	1 1/2"
Slabs on Grade	2"	1"	2"

5. Where specified, provide plain, cold-drawn electrically-welded wire reinforcement conforming to ASTM A-185. Supply in flat sheets only. Lap splice one cross wire spacing plus two inches.
6. Utilities shall not penetrate beams or columns but may pass through slabs and walls individually, uon. For openings 24" long or less, cut reinforcing and replace alongside opening with splice bars of equivalent area with 48 bar dia. lap. Prepare and submit shop drawings for openings longer than 24". For rectangular openings 12" long or longer, add 185 x 6' mid depth diagonal at all 4 corners.
7. Where reinforcing steel congestion permits, conduit and pipes up to 1" diameter may be embedded in concrete per ACI 318, Section 6.3. Space at 3 diameters o.c. Place between outer layers of reinforcing. If conduits are significantly congested, additional reinforcing perpendicular to piping may be required. Requests to embed larger pipes should be accompanied by a detailed description and be submitted to the architect for evaluation.
8. Provide construction joints in accordance with ACI 318, Section 6.4. Provide keyways and adequate dowels. Submit drawings showing location of construction joints and direction of pour for review.
9. Provide 3/4" chamfer for all exposed corners.
10. Provide reinforcing steel placer with a set of Structural Drawings for field reference. Inspect reinforcing steel placing from structural drawings.

CONCRETE MASONRY

1. Construct masonry in accordance with Specification Sections 042731; ACI 530/ASCE 5, "Building Code Requirements for Concrete Masonry Structures"; and ACI 530.1/ASCE 6, "Specifications for the Design and Construction of Load-Bearing Concrete Masonry".
2. The structure is supported by bearing walls, u.o.n. Erect masonry prior to casting concrete columns within bearing walls or casting beams and slabs supported by bearing walls.
3. Use 50% solid, nominal 8x8x16, concrete masonry units conforming to ASTM C90. Block net area compressive strength shall be 1900 psi. Lay up units in stack bond. Sawcut units which are not in multiples of 8". Units shall be at least 8" long. Bond corners by lapping ends 8" in successive vertical courses. Design of walls is based on a f'm of 1500 psi. Manufacture masonry units with lightweight aggregate (maximum wt. 27 lb./unit) for all 8" concrete block walls in the following areas:
4. Use Type S mortar in accordance with ASTM C270 except use Type M mortar for retaining walls. Head and bed joints shall be 3/8" for the thickness of the face shell. Webs are to be fully mortared in all courses of piers, columns and pilasters; in the starting course; and where an adjacent cell is to be grouted. Remove mortar protrusions extending 1/2" or more into cells to be grouted.
5. Use standard (9 gauge) horizontal joint reinforcing in every other course. Joint reinforcing and anchors in exterior walls shall conform to ASTM A 153 Class B2, with a coating thickness of 1.50 oz/sf. Overlap discontinuous ends 6". Use prefabricated corners and tees. Use truss type, except use ladder type in walls with vertical reinforcing. Extend joint reinforcing a minimum of 4" into tie columns.
6. Use fine grout conforming to ASTM C-476, with a minimum compressive strength of 2500 psi in 28 days. Aggregate to conform to ASTM C404 for fine grout, with slump of 8" to 10". Grout all masonry containing reinforcing, all cells of 4 hour rated walls, and where indicated on the drawings. Allow mortar to cure 24 hours prior to grouting. Provide cleanout openings at the base of cells containing reinforcing steel to clean the cell and to tie the vertical bar to the dowel. In high-lift grouting, use 5'-0" (max.) lifts, with 1/2 hour to 1 hour between lifts. Vibrate each lift and reconsolidate the previous lift.
7. Use ASTM A-615 Grade 60 reinforcing steel. Reinforce walls with #5 @32" o.c. provide #4 @16" horizontal reinforcement. Use bar spacers at 10 ft. o.c. where grout pour height exceeds 10 ft.
8. At bond/tie beam corners and intersections, place 1 #5 x 5'-0" T & B corner bar, with 30" legs each way, at the exterior face.
9. Reinforced masonry wall construction shall be inspected by an Engineer or Architect in accordance with ACI 530.1/ASCE 6.
10. Where anchor bolts, wedge anchors or anchors set in epoxy are set in a masonry wall, fill cells with grout for bolted course, one course above and two courses below.
11. Provide lintels or headers with min. 8" bearing over all masonry openings.
12. Use pressure-treated wood for wood in contact with masonry.

POST-INSTALLED ANCHORS - GENERAL

1. Substitution requests will be considered for products having an ICC-ES report recognizing the product for the appropriate application. Substitute concrete anchors must be approved for use in cracked concrete. Substitution requests shall include signed and sealed calculations prepared by a Florida Licensed Engineer who demonstrates that substituted product is capable of achieving the equivalent performance values of the design basis product.
2. Confirm the absence of reinforcing steel by drilling a 1/4" diameter pilot hole for each anchor. Do not cut reinforcing steel without approval of the Structural Engineer.
3. Install in accordance with manufacturer's instructions. Refer to manufacturer's installation instructions for appropriate drill size. Clean hole and remove dust.

MECHANICAL ANCHORS

1. For anchoring into concrete: Wedge-Type Mechanical anchors shall have been tested and qualified for use in accordance with ACI 355.2 and ICC-ES AC193. Pre-approved anchors include the Hilti Kwik Bolt TZ, Powers Power-Stud+SD1, and Simpson Strong-Bolt 2.
2. For anchoring into grouted masonry: Wedge-Type Mechanical anchors shall have been tested and qualified for use in accordance with ICC-ES AC01. Pre-approved anchors include the Hilti Kwik Bolt III, Powers Power-Stud+SD1, and Simpson Wedge-All.

SCREW ANCHORS

1. For anchoring into concrete: Screw anchors shall have been tested and qualified for use in accordance with ACI 355.2 and ICC-ES AC193. Pre-approved anchors include the ½"Ø Hilti HUS-EZ (KH-EZ) and the ½"Ø Powers Wedge-Bolt +.
2. For anchoring into grouted or ungrouted masonry: Screw Anchors shall have been tested and qualified for use in accordance with ICC-ES AC106. Pre-approved anchors include the ITW Redhead Tapcon and Powers Tapper+.

ADHESIVE ANCHORS

1. Installer shall be certified by the ACI-CRSI Adhesive Anchor Installation Certification Program. Engineer: Discuss requirement with PIC.
2. For anchoring into concrete: Adhesive anchors shall have been tested and qualified for use in accordance with ACI 355.4 and ICC-ES AC308. Pre-approved anchors include Hilti HIT-HY 200, Powers PURE110+, and Simpson Set-XP.
3. For anchoring into grouted masonry: Adhesive anchors shall have been tested and qualified for use in accordance with ICC-ES AC58. Pre-approved anchors include Hilti HIT-HY 200, Powers PURE110+, and Simpson Set-XP.
4. Threaded rods for use with adhesive are galvanized ASTM F1554 Grade 36 U.O.N.

PRE-ENGINEERED COLD FORMED STEEL ROOF TRUSSES

1. Design of CFS roof trusses shall conform to the latest edition of "Specifications for the Design of Cold-formed Structural Steel Members" (AISI), all applicable building codes and standards specified in the Structural Notes.
2. Pre-fabricated CFS roof trusses and their connections to each other shall be designed by a delegated engineer for the loads indicated below.
3. Signed and Sealed calculations and shop drawings showing truss configuration with member sizes and connections, truss layout with piece marks, required truss to truss connections, design loads and erection details must be submitted for review prior to fabrication. Connections may use welds or screws.
4. Materials: web and chord shall be fabricated from Manufacturer's standard steel sections, 18 gage minimum or as required by design, and shall meet the requirements of ASTM A653/A653M and ASTM A924 with minimum yield strength of 50 ksi.
5. See Structural and Architectural Drawings for outline shape and any special conditions/locations of panel points.
6. Temporary and permanent truss bridging required for truss stability during installation and for maintaining limits of un-braced length required by the truss design are considered part of the light-gage truss system and shall be designed and detailed by the light-gage delegated engineer.
   - A. Roof sheathing is adequate to provide lateral support to the top chord.
7. Truss design loads as follows:

Top Chord:	Dead Load	15 psf
	Live Load	20 psf
Bottom Chord:	Dead Load	10 psf
Maximum Deflection	Span/240	

8. Handling, erection and bracing of trusses shall not cause twist, distortion or reduction of strength in truss units.
9. All truss members shall be zinc coated G90. All welds shall be touched up with a zinc rich protective paint for corrosion resistance.

STEEL ROOF DECK & RIGID INSULATION

1. Manufacture and install steel roof deck in accordance with specifications of the steel deck institute
2. Manufacture steel sheets conforming to ASTM A-653, with a minimum yield point of 33 ksi and a G-90 protective zinc coating. Minimum deck properties are as follow:

Depth	Gage	Sn (in3)	Sn (in3)
1"	20	0.167	0.165

3. Fasten deck to all supports with #10 TEK screws. Fasten deck to end support at each rib and to edge support at 12" o.c. fasten sidelaps with #10 TEK screws at 12" o.c.
4. Erect steel deck closures and other light gage material required to produce a completed installation.
5. Manufacture and install steel deck for a minimum two span condition. One span conditions are prohibited except where specifically shown on the drawings
6. Do not hang ceiling, ducts, light fixtures, equipment or other items from roof deck.

Net Wind Roof Uplift Pressures

ZONES	TRIBUTARY AREA (SF)					
	10	20	50	100	200	500
1	-36/33	-34/32	-32/31	-30/30	-30/30	-30/30
2	-42/33	-40/32	-38/31	-36/30	-36/30	-36/30
3	-42/33	-40/32	-38/31	-36/30	-36/30	-36/30

Wall Wind Pressures (PSF)

ZONES	TRIBUTARY AREA (SF)					
	10	20	50	100	200	500
4	-39/36	-37/34	-35/32	-34/31	-32/29	-30/27
5	-48/36	-45/34	-40/32	-37/31	-34/29	-30/27

Wind pressure notes

1. Numbers on this sheet are the components and cladding gross unfactored service pressures perpendicular to the surface (in p.s.f.) based on tributary area. multiply service pressures by 1.6 to obtain wind pressures for factored loads using strength design (asce 7-10 2.3).
2. Pressures are derived from asce 7-10.
3. Directionality factor kd = .85
4. Negative pressures act away from surface, positive pressures act toward surface.
5. Zones 2,3, and 5 occur within 5'-0" of edges and corners

Overhangs

ZONES	TRIBUTARY AREA (SF)					
	10	20	50	100	200	500
20H	-66	-64	-62	-60	-60	-60
30H	-66	-64	-62	-60	-60	-60

WOLFBERG ALVAREZ
ARCHITECTURE · ENGINEERING
3225 AVIATION AVE., SUITE 400
MIAMI, FLORIDA 33133
V 305.666.5474
F 305.666.4994
WOLFBERGALVAREZ.COM
AA 002416 EB 002354

SEMINOLE AH-THA-THI-KI VISITOR RESTROOM
34600 W BOUNDARY ROAD
CLEWISTON, FL 33440

SEAL
Paul A. Zilio, P.E. Fla. Reg. No. 47013
BNI Project No. 14027

MARCEL R. MORLOTE, A.I.A.
FL. ARCHITECT
FL. ARCH. REG. NO. 9564

WA PROJECT NO.: 21524.00

ISSUE DATE
05/27/2016

NO.	REVISION DATE

DRAWING TITLE
General Notes

SHEET NUMBER
S1.01

BLISS & NYITRAY, INC.
STRUCTURAL ENGINEERS
Certificate of Authorization No.CA 674
800 Douglas Road, Suite 300
Coral Gables Florida, 33134
Tel. (305) 442-7086 Fax (866) 832-5291
www.bnienginеers.com
Paul A. Zilio, P.E. Fla. Reg. No. 47013
BNI Project No. 16M18

To the best of the Architect's or Engineer's knowledge, the plans and specifications comply with the applicable minimum codes and the applicable fire safety standards as determined by the local authority in accordance with F.B.C. section 110.3.7.4.4 and Chapter 633, Florida Statutes.

WOLFBERG ALVAREZ
ARCHITECTURE · ENGINEERING
3225 AVIATION AVE., SUITE 400
MIAMI, FLORIDA 33133
V 305.666.5474
F 305.666.4994
WOLFBERGALVAREZ.COM
AA 002416 EB 002354

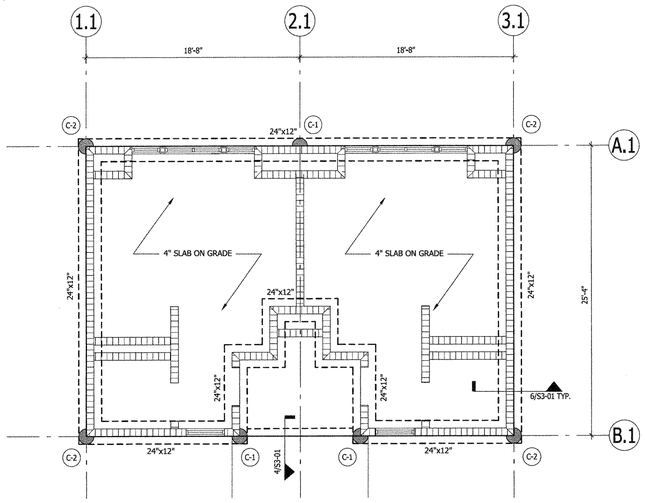

FOUNDATION AND GROUND FLOOR PLAN

SCALE: 3/16"=1'-0"

N

EL. -2'-0" U.O.N.

REFERENCE NOTES:

SCHEDULES & DETAILS	S3.01
FOUNDATION DETAILS	S3.02

PLAN NOTES

1 8"x16" CONCRETE TIE BEAM WITH 2 #5 TOP & BOTTOM

LEGEND:

8" MASONRY SHOWN AS THUS

MASONRY DESIGNATION

#5 VERTICAL REINFORCING — @40" O.C.

M8-5-40

8" MASONRY

SEMINOLE AH-THA-THI-KI VISITOR RESTROOM

34600 W BOUNDARY ROAD
CLEWISTON, FL 33440

SEAL

MARCEL R. MORLOTE, A.I.A.
FL. ARCHITECT
FL. ARCH. REG. NO. 9564

WA PROJECT NO.: 21524.00

ISSUE DATE
05/27/2016

NO.	REVISION DATE

DRAWING TITLE

Foundation and Ground Floor Plan

SHEET NUMBER

S2.01

BLISS & NYITRAY, INC.
STRUCTURAL ENGINEERS
Certificate of Authorization No.CA 674
800 Douglas Road, Suite 300
Coral Gables Florida, 33134
Tel. (305) 442-7086 Fax (866) 832-5291
www.bnienglineers.com
Paul A. Zillio, P.E. Fla. Reg. No. 47013
BNI Project No. 18M18

To the best of the Architect's or Engineer's knowledge, the plans and specifications comply with the applicable minimum codes and the applicable fire safety standards as determined by the local authority in accordance with F.B.C. section 110.3.7.4.4 and Chapter 633, Florida Statutes

WOLFBERG ALVAREZ
ARCHITECTURE · ENGINEERING
3225 AVIATION AVE., SUITE 400
MIAMI, FLORIDA 33133
V 305.666.5474
F 305.666.4994
WOLFBERGALVAREZ.COM
AA 002416 EB 002354

TRUSS CONNECTIONS SCHEDULE

TRUSS TYPE	CONNECTIONS AT WALL	
	TYPE	UPLIFT LOAD (lbs)
T-1	1	1150
J-1	1	1430
J-2	1	1630
GT-1	2	2800

TRUSS CONNECTION NOTES:

1. PREFIX "T" INDICATES TRUSSES, "RT" INDICATES RIDGE TRUSSES, "GT" INDICATES GIRDER TRUSSES AND "JT" INDICATES JACK TRUSSES.
2. CONNECTIONS BETWEEN TRUSSES DESIGNED BY DELEGATED ENGINEER
3. SEE DETAILS 6 THRU 8 ON S3.02

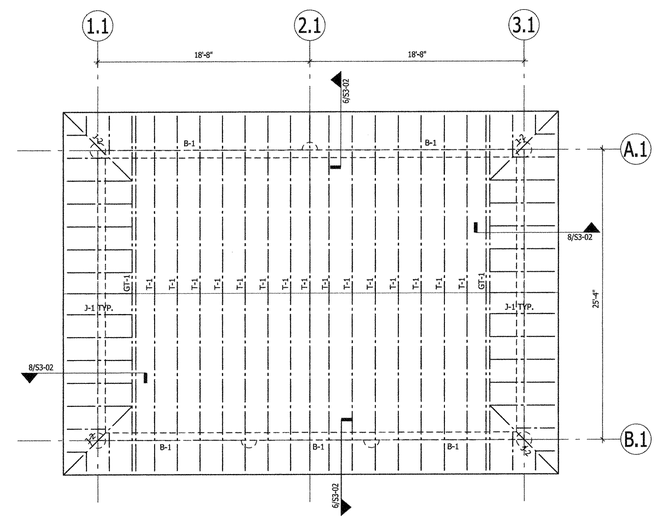

ROOF FRAMING PLAN

SCALE: 3/16"=1'-0"

N

SEMINOLE AH-THA-THI-KI VISITOR RESTROOM

34600 W BOUNDARY ROAD
CLEWISTON, FL 33440

SEAL

MARCEL R. MONLOYE, A.I.A.
FL ARCHITECT
FL ARCH. REG. NO. 9584

WA PROJECT NO.: 21524.00

ISSUE DATE
05/27/2016

NO.	REVISION DATE

DRAWING TITLE

Foundation and Ground Floor Plan

SHEET NUMBER

S2.02

BLISS & NYITRAY, INC.
STRUCTURAL ENGINEERS
Certificate of Authorization No.CA 674
800 Douglas Road, Suite 300
Coral Gables Florida, 33134
Tel. (305) 442-7086 Fax (866) 832-5291
www.bnieng.com
Paul A. Zilio, P.E. Fla. Reg. No. 47013
BNI Project No. 16M16

To the best of the Architect's or Engineer's knowledge, the plans and specifications comply with the applicable minimum codes and the applicable fire safety standards as determined by the local authority in accordance with F.B.C. section 110.7.1.4 and Chapter 633, Florida Statutes.

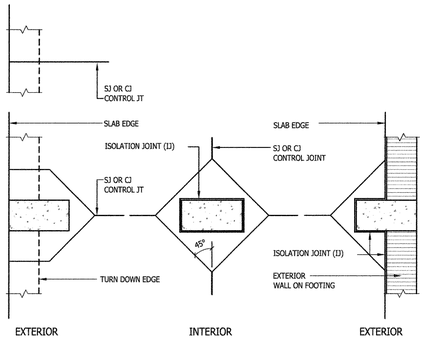

1 CONTROL JOINTS AT COLUMNS

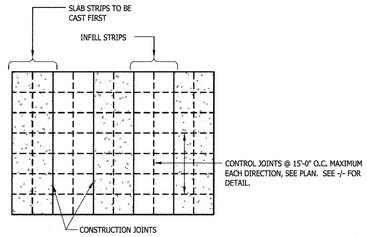

2 JOINTING PLAN
SLAB ON GRADE

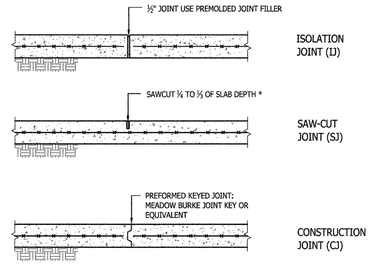

* PROVIDE SEALANT SAWCUT AS SOON AS POSSIBLE AFTER CONCRETE HARDENS. SAW CUTTING MUST BE COMPLETE WITHIN 8 HRS. AFTER POURING.

3 CONTROL JOINTS
SLAB ON GRADE

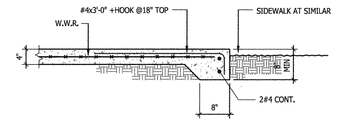

4 SLAB EDGE DETAIL

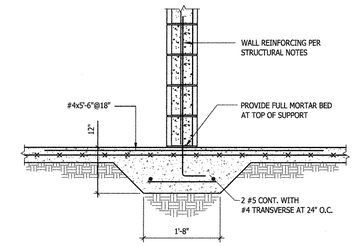

5 THICKENED SLAB DETAIL
INTERIOR WALLS

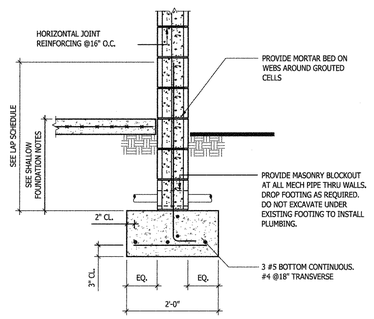

6 WALL FOOTING DETAIL

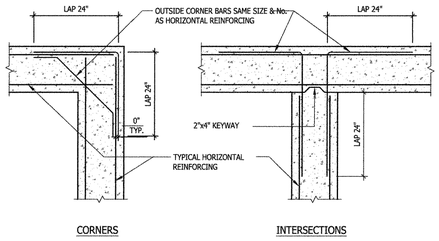

7 TYPICAL HORIZONTAL REINFORCING
CONCRETE TIE BEAMS, WALLS, AND FOOTINGS

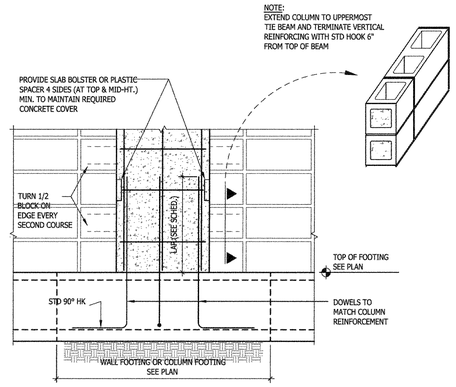

8 TYPICAL TIE COLUMN DETAIL

WOLFBERG ALVAREZ
ARCHITECTURE ENGINEERING
3225 AVIATION AVE., SUITE 400
MIAMI, FLORIDA 33133
V 305.666.5474
F 305.666.4994
WOLFBERGALVAREZ.COM
AA 002416 EB 002354

SEMINOLE AH-THA-THI-KI VISITOR RESTROOM
34600 W BOUNDARY ROAD
CLEWISTON, FL 33440

SEAL
PAUL ANTHONY ZILIO
No. 47013
STATE OF FLORIDA
LICENSED
PROFESSIONAL ENGINEER
Paul A. Zilio, P.E. Fla. Reg. No. 47013
BNI Project No. 14827

MARCEL R. MORLOTE, A.I.A.
FL. ARCHITECT
FL. ARCH. REG. NO. 9564

WA PROJECT NO.: 21524.00

ISSUE DATE
05/27/2016

NO.	REVISION DATE

DRAWING TITLE
Ground Level Details

SHEET NUMBER
S3.01

BLISS & NYITRAY, INC.
STRUCTURAL ENGINEERS
Certificate of Authorization No.CA 674
800 Douglas Road, Suite 300
Coral Gables Florida, 33134
Tel. (305) 442-7086 Fax (866) 832-5291
www.bnienglineers.com
Paul A. Zilio, P.E. Fla. Reg. No. 47013
BNI Project No. 16M16

To the best of the Architect's or Engineer's knowledge, the plans and specifications comply with the applicable minimum codes and the applicable fire safety standards as determined by the local authority in accordance with F.B.C. section 110.3.7.4.4 and Chapter 633, Florida Statutes

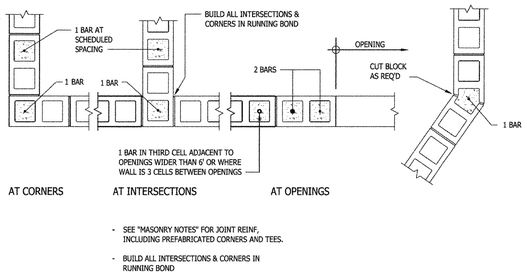

- SEE "MASONRY NOTES" FOR JOINT REINF. INCLUDING PREFABRICATED CORNERS AND TEES.
- BUILD ALL INTERSECTIONS & CORNERS IN RUNNING BOND

1 MASONRY WALL REINFORCING
NOT REQUIRED IN UN-REINFORCED WALLS

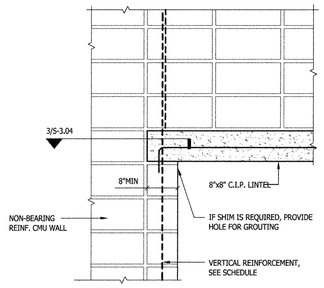

2 CONCRETE LINTEL SUPPORT

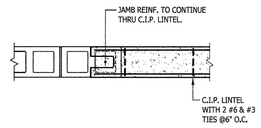

3 CONCRETE LINTEL SUPPORT
PLAN DETAIL

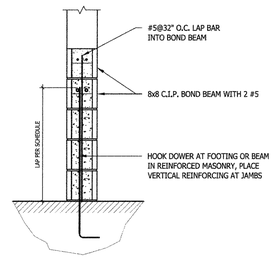

4 TYPICAL MASONRY SILL DETAIL

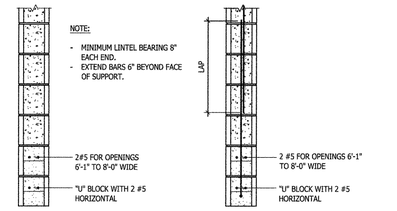

5 TYPICAL LINTEL DETAIL
SEE ARCHITECTURAL DRAWINGS FOR LOCATION

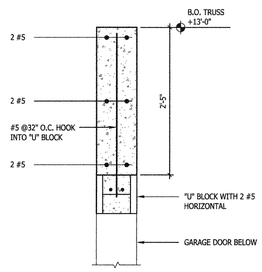

6 TRUSS CONNECTION TO CMU WALL
TYPES 1 AND 2

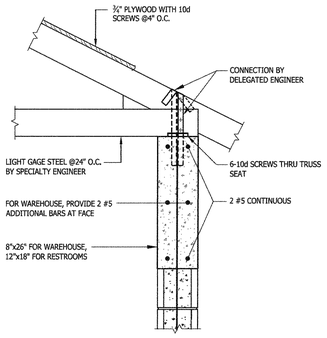

7 TRUSS CONNECTION TO CMU WALL
TYPES 1 AND 2

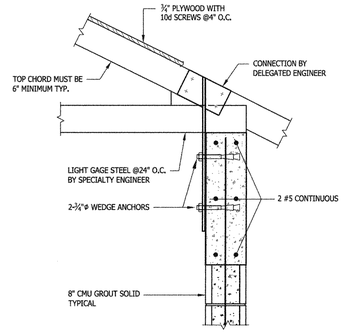

8 TRUSS CONNECTION TO TOP OF WALL
TYPE 3

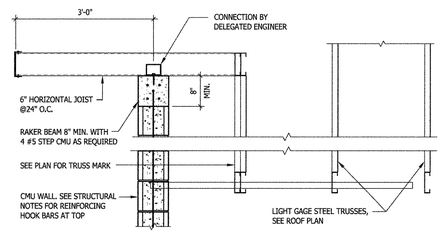

9 TYP. DETAIL @ OVERHANGS

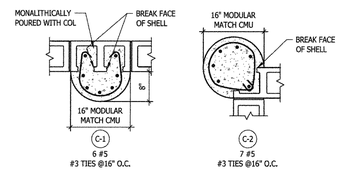

COLUMN TYPE

WOLFBERG ALVAREZ
ARCHITECTURE · ENGINEERING
3225 AVIATION AVE., SUITE 400
MIAMI, FLORIDA 33133
V 305.666.5474
F 305.666.4994
WOLFBERGALVAREZ.COM
AA 002416 EB 002354

SEMINOLE AH-THA-THI-KI VISITOR RESTROOM

34600 W BOUNDARY ROAD
CLEWISTON, FL 33440

SEAL
PAUL A. ZILIO STATE OF FLORIDA No. 47013 PROFESSIONAL ENGINEER
Paul A. Zilio, P.E. Fla. Reg. No. 47013
BNI Project No. 16M16

MARCEL R. MORLOTE, A.I.A.
FL. ARCHITECT
FL ARCH. REG. NO. 9564

WA PROJECT NO.: 21524.00

ISSUE DATE
05/27/2016

NO.	REVISION DATE

DRAWING TITLE
Masonry Details

SHEET NUMBER
S3.02

BLISS & NYITRAY, INC.
STRUCTURAL ENGINEERS
Certificate of Authorization No.CA 674
800 Douglas Road, Suite 300
Coral Gables Florida, 33134
Tel. (305) 442-7086 Fax (866) 832-5291
www.bnienginieers.com
Paul A. Zilio, P.E. Fla. Reg. No. 47013
BNI Project No. 16M16

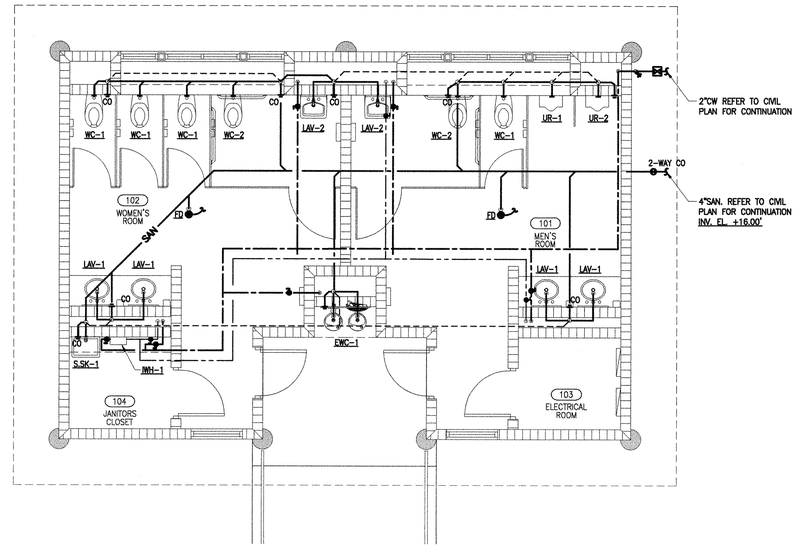

1 P3.01 PLUMBING – RESTROOMS PLAN
SCALE: 1/4"=1'-0"

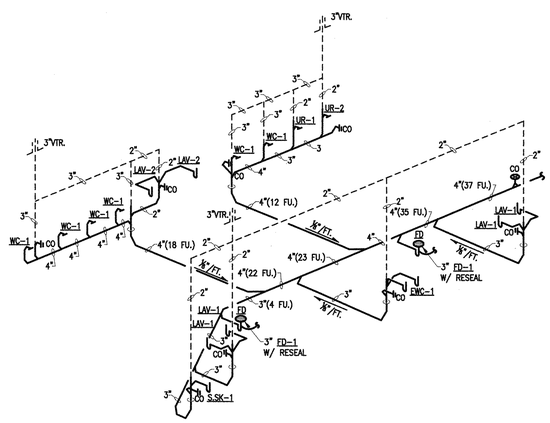

2 P3.01 SANITARY DIAGRAM
NOT TO SCALE

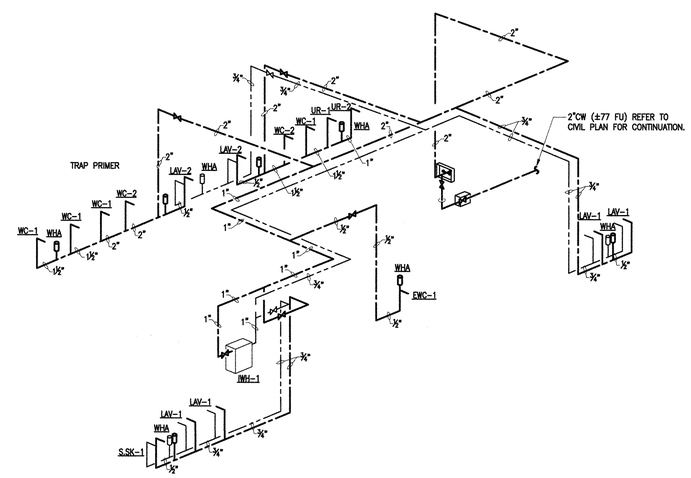

3 P3.01 DOMESTIC WATER RISER DIAGRAM
NOT TO SCALE

WOLFBERG ALVAREZ
ARCHITECTURE ENGINEERING
3225 AVIATION AVE., SUITE 400
MIAMI, FLORIDA 33133
V 305.666.5474
F 305.666.4994
WOLFBERGALVAREZ.COM
AA 002416 EB 002354

SEMINOLE AH-TAH-THI-KI VISITOR RESTROOM
34600 W BOUNDARY ROAD
CLEWISTON, FL 33440

SEAL
CESAR HERRAN, P.E.
FL. MECHANICAL ENGINEER
REG. No. 71524

WA PROJECT NO.: 21524.00

ISSUE DATE
05/27/2016

NO.	REVISION DATE

DRAWING TITLE
PLUMBING STORAGE BUILDING AND RESTROOMS PLAN

SHEET NUMBER
P3.01

P:\Seminole Maintenance Building and Restrooms_2015\Drawings\CD\Visitor Restrooms\Plumbing\P3.01-SVR.dwg Jun 03, 2016 - 8:34am RBGRUON

To the best of the Architect's or Engineer's knowledge, the plans and specifications comply with the applicable minimum codes and the applicable fire-safety standards as determined by the local authority in accordance with F.B.C. section 110.3.7.4.4 and Chapter 633, Florida Statutes.

PLUMBING NOTES

1. ALL WORK UNDER THIS CONTRACT SHALL COMPLY WITH THE LATEST EDITION OF THE "FLORIDA BUILDING CODE – 2014 EDITION" AND ALL APPLICABLE LOCAL ORDINANCES.
2. CONTRACTOR SHALL VISIT THE SITE AND THOROUGHLY FAMILIARIZE HIMSELF WITH AND VERIFY ALL EXISTING CONDITIONS AND REPORT ANY DISCREPANCIES TO THE ARCHITECT/ ENGINEER PRIOR TO COMMENCING WORK.
3. THE CONTRACTOR SHALL COORDINATE THE WORK OF THIS TRADE WITH ALL OTHER TRADES TO AVOID INTERFERENCE WITH THE PROGRESS OF CONSTRUCTION AND REPORT ANY DISCREPANCIES TO THE ARCHITECT/ ENGINEER.
4. THE CONTRACTOR SHALL VERIFY ALL DIMENSIONS WITH THE ARCHITECTURAL PLANS.
5. ALL WORK SHALL BE PERFORMED BY A LICENSED PLUMBING CONTRACTOR IN A FIRST CLASS WORKMANLIKE MANNER. THE COMPLETE SYSTEM SHALL BE FULLY OPERATIVE.
6. ALL AUTOMATIC ELECTRIC WATER HEATER SHALL MEET THE STANDARDS OF THE LATEST ENERGY EFFICIENCY CODE.
7. VERIFY THE LOCATION, SIZE AND ELEVATION OF ALL UTILITIES PRIOR TO BEGINNING CONSTRUCTION. ADVISE ARCHITECT/ ENGINEER OF ANY DISCREPANCIES.
8. DRAWINGS ARE DIAGRAMMATIC. DO NOT SCALE DRAWINGS FOR THE EXACT LOCATION OF FIXTURES AND PIPING.
9. SHUT OFF VALVES SHALL BE PROVIDED AT ALL PLUMBING FIXTURES.
10. PROVIDE DIELECTRIC UNIONS WHERE DISSIMILAR METALS ARE JOINED.
11. ESCUTCHEONS SHALL BE CHROME PLATED BRASS WITH LOCKING SCREWS WHERE PIPES PASS THROUGH FINISHED WALLS.
12. A CLEAN OUT SHALL BE PROVIDED AT THE BASE OF EACH SOIL, STORM AND WASTE STACK.
13. ALL 3" OR BIGGER HORIZONTAL BRANCHES, SEWER AND DRAIN SHALL BE SLOPED AT A MINIMUM OF 1/8"IN/FT AND 2" OR SMALLER SHALL BE AT 1/4"IN/FT UNLESS OTHERWISE INDICATED ON PLANS.
14. EVERY FIXTURE CONNECTED TO THE DRAINAGE SYSTEM SHALL BE EQUIPPED WITH A WATER SEAL TRAP.
15. PLUMBING FIXTURES SHALL COMPLY WITH WATER CONSERVATION FS.553.14.
16. ALL HOT WATER PIPES SHALL BE INSULATED.
17. ALL EXPOSED PIPING WITHIN TOILET ROOMS SHALL BE CHROME PLATED.
18. INSULATED EXPOSED DRAIN AND WATER PIPING OF THE HANDICAPPED LAVATORY.
19. SINK SK-1 MAXIMUM DEPTH SHALL NOT EXCEED 6 1/2" FOR ADA COMPLIANCE
20. ESCUTCHEONS SHALL BE CHROME PLATED BRASS WITH LOCKING SCREWS WHERE PIPES PASS THROUGH FINISHED WALLS.
21. A CLEAN OUT SHALL BE PROVIDED AT THE BASE OF EACH SOIL AND WASTE STACK.
22. AS PER FBC-PLUMBING 606.3, PROVIDE ACCESS TO ALL SHUT-OFF VALVES.
23. PROVIDE SHUT-OFF VALVES IN COMPLIANCE WITH FBC-PLUMBING, 606.1.
24. FOR FIRE RATED WALL PENETRATION DETAIL REFER TO ARCHITECTURAL PLANS.

PLUMBING LEGEND

SYMBOL	DESCRIPTION	SYMBOL	DESCRIPTION	SYMBOL	DESCRIPTION
CA	COMPRESSED AIR LINE		AIR CHAMBER	AD	AREA DRAIN
CA	EXISTING COMPRESSED AIR LINE	WHA	WATER HAMMER ARRESTOR	ABV.	ABOVE
CW	EXISTING COLD WATER LINE (CW)		BALANCING VLV. W/ INDICATOR	AFC	ABOVE FINISH CEILING
	NEW COLD WATER LINE (CW)		BALL VALVE	BLW	BELOW
T	NEW TEMPERED WATER LINE (T)		CHECK VALVE	C.B.	CATCH BASIN
CD	NEW CONDENSATE DRAIN LINE		GATE VALVE	CEIL., CLG.	CEILING
CD	EXISTING CONDENSATE DRAIN LINE		GAS COCK VALVE	E.W.C.	ELECTRIC WATER COOLER
G	EXISTING GAS LINE		SOLENOID VALVE	E.W.H.	ELECTRIC WATER HEATER
G	GAS LINE		VALVE IN BOX	F.D.V.	FIRE DEPARTMENT VALVE
GW	GREASE WASTE	VIV	GATE VALVE IN VERTICAL	FL.	FLOOR
GW	EXISTING GREASE WASTE	HB	HOSE BIBB W/ BACK FLOW PREVENTER AND SHUT-OFF VALVE.	F.U.	FIXTURE UNIT
HW	EXISTING HOT WATER LINE (HW)		UNION	F.S.	FLOOR SINK
	NEW HOT WATER LINE (HW)	FD	FLOOR DRAIN W/ TRAP RESEAL	G.W.H.	GAS WATER HEATER
HWR	EXISTING HOT WATER RECIRCULATING LINE (HWR)	RD	ROOF DRAIN	GD	GUTTER DRAIN
	INDIRECT SAFE WASTE (IW)		FLOOR SINK FULL GRATE (FS)	R.W.L.	RAIN WATER LEADER
PR	PRESSURE & TEMPERATURE RELIEF LINE		FLOOR SINK W/ HALF GRATE (FS)	TP	TRAP PRIMER
PD	PAN DRAIN		FLOOR SINK W/ 3/4 GRATE (FS)	(UG)	UNDERGROUND
SAN	EXISTING SANITARY LINE (SAN)		STEAM TRAP	V.T.R.	VENT THRU ROOF
	NEW SANITARY WASTE LINE (SAN)	FCO	FLOOR CLEAN OUT	VB	VACUUM BREAKER
V	EXISTING VENT LINE (V)	WCO	WALL CLEAN OUT	WH	WATER HEATER
V	SANITARY VENT LINE (V)		"P" TRAP	VFD	VARIABLE FREQUENCY DRIVE
SD	EXISTING STORM DRAIN LINE		CONNECT TO EXISTING		
SD	NEW STORM DRAIN LINE		END OF DEMOLITION		
AR	ACID RESISTANT PIPING		TAMPER SWITCH		
HWS	HOT WATER SUPPLY		FLOW SWITCH		
HWR	HOT WATER RETURN	W O	RISER ID.		
STM	STEAM PIPING		LINE TO BE DEMOLISHED / REMOVED		
80 PSIG	STEAM SUPPLY. FIGURE INDICATES OPERATING PRESSURE.				
FW	BOILER FEED WATER				
	ARROW INDICATES DIRECTION OF PIPE PITCH DOWNWARD				

NOTE:
THIS IS A GENERAL LEGEND FOR SYMBOLS APPLICABLE TO THIS PROJECT, REFER TO THE DRAWINGS.

PLUMBING FIXTURE CONNECTION SCHEDULE

MARK	DESCRIPTION	WASTE	CW	HW	FLOW RATES **	REMARKS
WC-1	WATER CLOSET	4"	1"	–	1.28 GPF	BATTERY OPERATED FLUSH VALVE/WALL MTD./AMERICAN STANDARD VITREOUS CHINA AFWALL 2257.001, FAUCET FLOWISE #6065.121.002
WC-2	WATER CLOSET	4"	1"	–	1.28 GPF	BATTERY OPERATED FLUSH VALVE/WALL MTD./ADA COMPLIANT/AMERICAN STD. VITREOUS CHINA AFWALL 2257.001, FAUCET FLOWISE #6065.121.002
UR-1	URINAL	3"	3/4"	–	0.5 GPF	WALL MOUNTED, WASHBROOK #6590.001 VITREOUS CHINA, HIGH EFFICIENCY URINAL, BATTERY POWERED FLUSHVALVE .0125GPF FLOWISE 6063.013.002
UR-2	URINAL	3"	3/4"	–	0.5 GPF	WALL MOUNTED, WASHBROOK #6590.001 VITREOUS CHINA, HIGH EFFICIENCY URINAL, BATTERY POWERED FLUSHVALVE .0125GPF FLOWISE 6063.013.002 ADA COMPLIANT
LAV-1	LAVATORY	1 1/4"	1/2"	1/2"	0.5 GPM	UNDERCOUNTED, VITREOUS CHINA, 0.5GPM PER CYCLE
LAV-2	LAVATORY	1 1/4"	1/2"	1/2"	0.5 GPM	WALL MOUNTED / ADA COMPLIANT COUNTERTOP LAVATORY
S.SK-1	SERVICE SINK	3"	1/2"	1/2"	1.5 GPM	SERVICE SINK WITH TRAP STANDARD (FLOOR MOUNTED)
HB	HOSE BIBB / WALL HYDRANT	–	1/2"	–	–	WALL HYDRANT W/ COVER
EWC-1	ELECTRIC WATER COOLER	1 1/4"	1/2"	–	–	WALL MOUNTED MOUNTED – BI-LEVEL / ADA COMPLIANT WITH BOTTLE WATER FILLING ELKAY EZH20 LZWS-SFGRN28K

** FROM TABLE 604.4 MIAMI DADE COUNTY ORDINANCE III, SEC. 08-31 MAXIMUM WATER CONSUMPTION FLOW RATES AND QUANTITIES FOR PLUMBING FIXTURES, FIXTURE FITTINGS AND APPLIANCES.

INSTANT WATER HEATER SCHEDULE

MARK	MANUFACTURER	MODEL	GALLON CAPACITY	RECOVERY GPH EACH	ELECTRICAL	REMARKS
EWH-1	TITAN HEATER	N-100	–	–	10.8 KW , 208V 1ϕ, 49AMP	JANITOR CLOSET

WATER HAMMER ARRESTOR (WHA) SELECTOR CHART

HYDRA-RESTER TYPE NO.	652-A	653-B	654-C	655-D	656-E	657-F
P.D.I. SYMBOLS *	A	B	C	D	E	F
FIXTURE-UNITS RATING	1-11	12-32	33-60	61-113	114-154	155-330

* CLASSIFICATION ESTABLISHED BY THE PLUMBING AND DRAINAGE INSTITUTE "STANDARD P.D.I.- WH201"

* HYDRA-RESTER TYPE IS BASED ON "SIOUX CHIEF" PRODUCT.

SLOPE OF HORIZONTAL DRAINAGE PIPE

SIZE (inches)	MINIMUM SLOPE (inch per foot)
2 or less	1/4
3 to 6	1/8
8 or larger	1/16

SLOPE PER TABLE 704.1 FBC/P 2010 (UNLESS OTHERWISE NOTED)

1 PLUMBING NOTES
P6.01 SCALE: N.T.S.

2 PLUMBING LEGEND
P6.01 SCALE: N.T.S.

3 PLUMBING SCHEDULES
P6.01 SCALE: N.T.S.

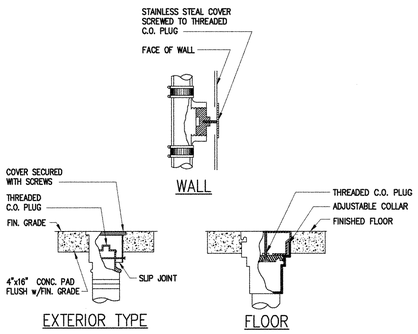

4 TYPICAL CLEANOUT DETAIL
P6.01 SCALE: N.T.S.

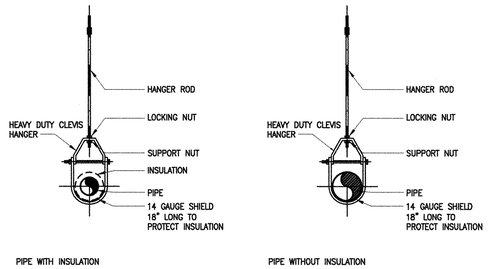

5 PIPE HANGER- CLEVIS TYPE DETAIL
P6.01 SCALE: N.T.S.

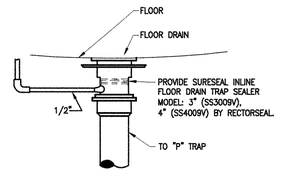

6 TRAP RESEAL DETAIL
P6.02 SCALE: N.T.S.

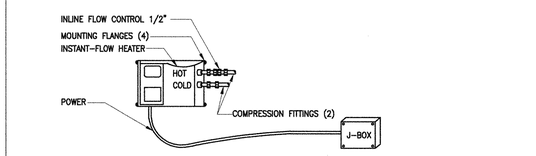

TECHNICAL SPECIFICATIONS (SPECS)

COMPLIANCE: UL #499 STANDARDS: ANZI-Z, 10,03
TESTED: APPLIED RESEARCH #29.580
MATERIALS: BRASS CASING
PIPE FITTING: 1/2"
STANDARD PRESSURE REQUIRED: 5-150 PSI
ELEMENTS: DUAL INCOLOY NICRHOME
ENERGY EFFICIENCY: UP TO 99.5 %
ACTIVATION: 0.4 GPM-ON/0.3 GPM-OFF
INDICATORS: RED=ON/AMBER=STANDBY

INSTANT WATER HEATER TEMPERATURE RISE CHART (° FAHRENHEIT)

GPM Flow	1.0	1.5	2.0	2.5	3.0	3.5
(ΔW-U) TEMP RISE	74°	49°	37°	30°	25°	21°

NOTES: GPM – GALLONS PER MINUTE. DEGREES (°) FAHRENHEIT. VALUES ARE APPROXIMATE.

7 INSTANTWATER HEATER DETAIL
P6.01 SCALE: N.T.S.

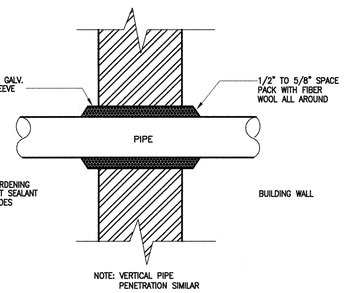

NOTE:
FOR FIRE RATED WALL PENETRATION DETAIL REFER TO ARCHITECTURAL DRAWINGS.

8 PIPING WALL PENETRATION DETAIL
P6.01 SCALE: N.T.S.

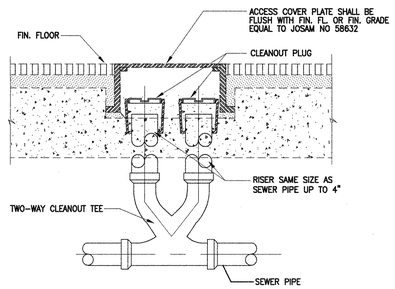

9 TWO WAY CLEANOUT DETAIL
P6.01 SCALE: N.T.S.

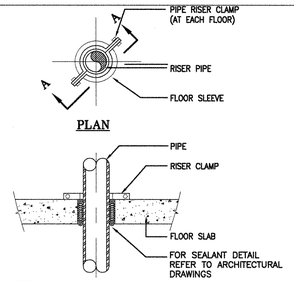

NOTE:
HANGERS FOR BARE COPPER PIPING TO BE PLASTIC COATED

SECTION "AA"

4 PIPE RISER CLAMP DETAIL
P6.02 SCALE: N.T.S.

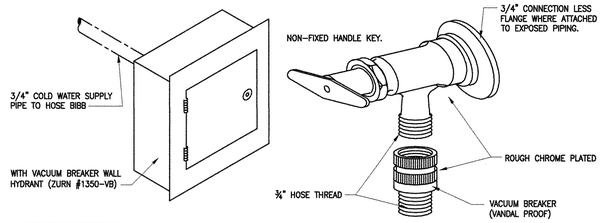

ENGINEERING SPECIFICATION:
ZURN Z1350 ENCASED MODERATE CLIMATE WALL HYDRANT FOR NARROW WALL INSTALLATION. COMPLETE WITH BRONZE BODY, ALL BRONZE INTERIOR PARTS, REPLACEABLE SEAT WASHER, SCREWDRIVER OPERATED STOP VALVE IN SUPPLY, KEY OPERATED CONTROL VALVE, AND 3/4 [19] Ø FEMALE INLET AND 3/4 [19] MALE HOSE CONNECTION STANDARD. ADJUSTABLE STAINLESS STEEL BOX FURNISHED WITH HINGED COVER, CYLINDER LOCK AND "WATER" STAMPED ON COVER.

NOTE:
PROVIDE SHUT-OFF VALVE & VACUUM BREAKER.

NOTE:
THE ADJUSTABLE SLEEVE ON THE STAINLESS STEEL BOX IS PROVIDED WITH A GASKET AS STANDARD, BUT ADDITIONAL CAULKING OF ALL INSIDE JOINTS IS REQUIRED (BY OTHERS) AFTER THE HYDRANT BOX HAS BEEN PROPERLY SET. CAULKING SHOULD BE PERFORMED ON ALL OPEN SEAMS, INCLUDING THE SEAMS WHERE THE GASKET IS PRESENT

10 WALL HYDRANT BOX DETAIL
P6.01 SCALE: N.T.S.

To the best of the Architect's or Engineer's knowledge, the plans and specifications comply with the applicable minimum codes and the applicable fire-safety standards as determined by the local authority in accordance with F.B.C. section 110.3.7.4.4 and Chapter 633, Florida Statutes.

WOLFBERG ALVAREZ
ARCHITECTURE ENGINEERING
3225 AVIATION AVE., SUITE 400
MIAMI, FLORIDA 33133
V 305.666.5474
F 305.666.4994
WOLFBERGALVAREZ.COM
AA 002416 EB 002354

SEMINOLE AH-TAH-THI-KI VISITOR RESTROOM
34600 W BOUNDARY ROAD
CLEWISTON, FL 33440

SEAL
CESAR HERRAN LICENSE No. 71524 STATE OF FLORIDA PROFESSIONAL ENGINEER
06/03/16

CESAR HERRAN, P.E.
FL. MECHANICAL ENGINEER
REG. No. 71524

WA PROJECT NO.: 21524.00

ISSUE DATE
05/27/2016

NO.	REVISION DATE

DRAWING TITLE
NOTES, SCHEDULES & DETAILS

SHEET NUMBER
P6.01

P:\Seminoles Maintenance Building and Restrooms 2015\Drawings\CD\Visitor Restrooms\Plumbing\P6.01-SVR.dwg Jun 03, 2016 - 8:35am RBORJON

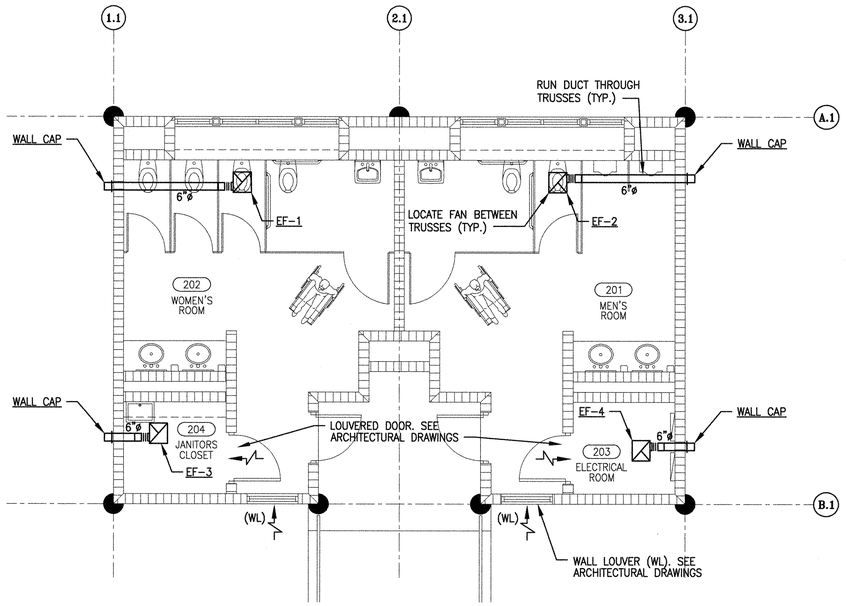

1 / M3.01 HVAC RESTROOM BUILDING PLAN
SCALE: 1/4"=1'-0"

FAN SCHEDULE

UNIT DESIGNATION	EF-1	EF-2	EF-3	EF-4	
AREA SERVED	WOMEN'S ROOM #104	MEN'S ROOM #101	JAN. CLOSET #104	ELECTRICAL ROOM #103	
SERVICE	EXHAUST	EXHAUST	EXHAUST	EXHAUST	
FAN TYPE	CEILING FAN GEMINI	CEILING FAN GEMINI	CEILING FAN GEMINI	CEILING FAN GEMINI	
DRIVE TYPE	DIRECT	DIRECT	DIRECT	DIRECT	
TOTAL AIR, CFM	225	225	100	150	
EXTERNAL STATIC PRESS., IN. W.G.	0.125	0.125	0.125	0.125	
FAN SPEED, RPM	1100	1100	900	1100	
dBA/SOUND SONES	51/5.5	51/5.5	34/1.2	43/3	
FAN MOTOR HP (NON-OVERLOAD)	0.817 AMPS	0.817 AMPS	0.313 AMPS	0.443 AMPS	
ELECTRICAL SERVICE REQUIRED	120/1/60	120/1/60	120/1/60	120/1/60	
OPERATING WEIGHT, LBS.	20	20	20	20	
NOTES AND ACCESSORIES	①②③④	①②③④	①②③	①②③	
DESIGN MANUFACTURER	COOK	COOK	COOK	COOK	
DESIGN MANUFACTURER'S NUMBER	GC-186	GC-186	GC-146	GC-166	

NOTES AND ACCESSORIES:

1. SERVICE SWITCH/DISCONNECT SWITCH
2. WIRED THROUGH LIGHT SWITCH.
3. PROVIDE MFGR. PRE-WIRED SOLID STATE SPEED CONTROLLER.
4. RUN CONTINUOUSLY

HVAC SYSTEM REQUIREMENTS

HVAC DESIGN REQUIRES:	YES	NO
DUCT SMOKE DETECTOR	✓	
FIRE DAMPER (S)	✓	
SMOKE DAMPER (S)	✓	
FIRE RATED ENCLOSURE	✓	
FIRE RATED ROOF/FLOOR CEILING ASSEMBLY	✓	
FIRE STOPPING	✓	
SMOKE CONTROL	✓	

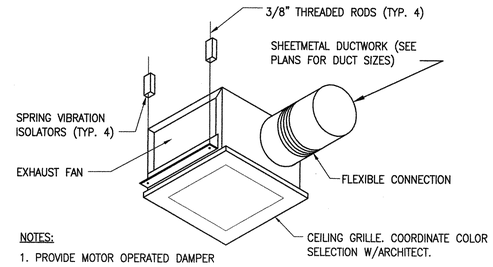

NOTES:

1. PROVIDE MOTOR OPERATED DAMPER
2. PROVIDE INTERNAL ISOLATOR AND SOUND INSULATION.
3. SUPPORT FAN FROM STRUCTURE.

2 / M3.01 CABINET CEILING FAN
NOT TO SCALE

WOLFBERG ALVAREZ
ARCHITECTURE ENGINEERING
3225 AVIATION AVE., SUITE 400
MIAMI, FLORIDA 33133
V 305.666.5474
F 305.666.4994
WOLFBERGALVAREZ.COM
AA 002416 EB 002354

SEMINOLE AH-TAH-THI-KI VISITOR RESTROOM
34600 W BOUNDARY ROAD
CLEWISTON, FL 33440

SEAL
CESAR HERRAN, LICENSE No. 71524, STATE OF FLORIDA, PROFESSIONAL ENGINEER
06/03/2016

CESAR HERRAN, P.E.
FL. MECHANICAL ENGINEER
REG. No. 71524

WA PROJECT NO.: 21524.00

ISSUE DATE
05/27/2016

NO.	REVISION DATE

DRAWING TITLE
HVAC - RESTROOM BUILDING PLAN

SHEET NUMBER
M3.01

P:\Seminoles Maintenance Building and Restrooms.2015\Drawings\CD\Visitor Restrooms\Mechanical\M3.01-SVR.dwg Jun 02, 2016 - 4:40pm JPEDRAZA

To the best of the Architect's or Engineer's knowledge, the plans and specifications comply with the applicable minimum codes and the applicable fire-safety standards as determined by the local authority in accordance with F.B.C. section 110.3.7.4.4 and Chapter 633, Florida Statutes.

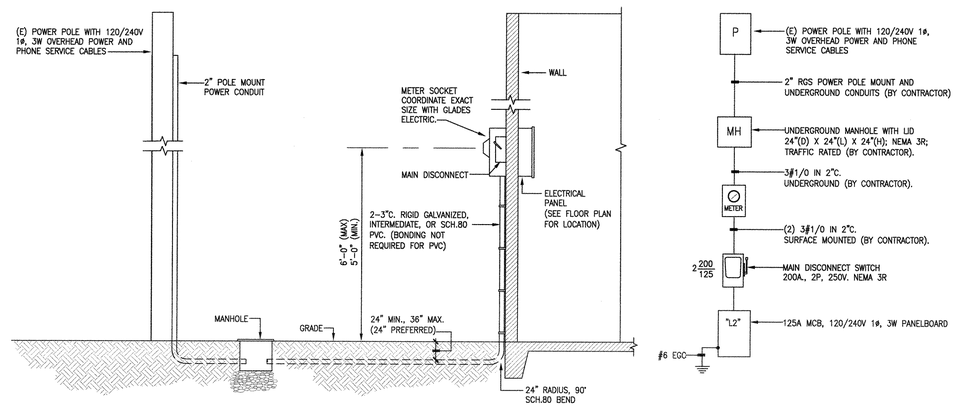

RESTROOM BLDG. POLE MOUNT CONDUIT DETAIL AND POWER RISER DIAGRAM
N.T.S.

INSTALATION COORDINATION NOTE:

1- CONTACT GLADES ELECTRIC FOR POWER SERVICE CONNECTION.
* TIM LOWMAN – (863) 946-6272
* MARK GOODWIN – (863) 946-6216

EXISTING PANEL L2

LOCATION: VISITOR RESTROOM
SUPPLIED FROM: GLADES ELECTRIC
MOUNT: SURFACE
NEMA: 1

PNL VOLTAGE: 120/240, 1P, 3W
PNL AIC (RMS): 35,000 A
PANEL TYPE: NQ
MAIN BREAKER: 125 A
SPACE: 30
BUS: 225 A

BOLT- IN BREAKERS
FULL SOLID NEUTRAL BUS
GROUND BUS

LT	CKT NO	EQUIPMENT SERVED	WIRE COND	POLE-BKR	CONNECTED VA A	CONNECTED VA B	POLE-BKR	WIRE COND	EQUIPMENT SERVED	CKT NO	LT
A	1	LIGHTS	2#12,1#12(G),3/4"	1-20	147	215	1-20	2#12,1#12(G),3/4"	LIGHTS	2	A
A	3	LIGHTS	2#12,1#12(G),3/4"	1-20	147	740	1-20	2#12,1#12(G),3/4"	WATER COOLER	4	F
F	5	RECEPTACLE	2#12,1#12(G),3/4"	1-20	720	2,500	1-30	2#10,1#10(G),3/4"	HAND DRYER	6	E
F	7	HAND DRYER	2#10,1#10(G),3/4"	1-30	2,500	5,400	2-70	2#4,1#8(G),1"	IWH-2	8	E
B	9	EF-4	2#12,1#12(G),3/4"	1-20	100	5,400				10	E
B	11	EF-5	2#12,1#12(G),3/4"	1-20	100	1,500	1-20	2#12,1#12(G),3/4"	SPARE	12	E
B	13	EF-6	2#12,1#12(G),3/4"	1-20	100	1,500	1-20	2#12,1#12(G),3/4"	SPARE	14	E
B	15	EF-7	2#12,1#12(G),3/4"	1-20	100					16	
	17									18	
	19									20	
	21									22	
	23									24	
	25									26	
	27						2-30	2#10,1#10(G),3/4"		28	
	29									30	
				CONNECTED VA:	3,914	17,255					

DEMAND FACTOR: 1.01

TOTAL CONNECTED VA: 21169 AMPS: 88

TOTAL DEMAND AMPS: 89

	LOAD TYPE (LT)	CONNECTED	FACTOR	DEMAND
A	LIGHTING	509	1.25	636
B	AIR CONDITIONING	400	1.00	400
C	REFRIGERATION	0	1.00	0
D	KITCHEN	0	0.65	0
E	MISC. EQUIPMENT	16300	1.00	16300
F	RECPTS (1st 10 KW)	3960	1.00	3960
	(Remaining Recpt.s)	0	0.50	0
	TOTAL DEMAND VA:	21169	1.01	21296

Design Notes:

PANEL "L2"

To the best of the Architect's or Engineer's knowledge, the plans and specifications comply with the applicable minimum codes and the applicable fire-safety standards as determined by the local authority in accordance with F.B.C. section 110.3.7.4.4 and Chapter 633, Florida Statutes.

WOLFBERG ALVAREZ
ARCHITECTURE · ENGINEERING
3225 AVIATION AVE., SUITE 400
MIAMI, FLORIDA 33133
V 305.666.5474
F 305.666.4994
WOLFBERGALVAREZ.COM
AA 002416 EB 002354

SEMINOLE AH-TAH-THI-KI VISITOR RESTROOM
34600 W BOUNDARY ROAD
CLEWISTON, FL 33440

SEAL
JULIO E. ALVAREZ, P.E. LICENSE No. 14595 STATE OF FLORIDA PROFESSIONAL ENGINEER

JULIO E. ALVAREZ, P.E.
ELECTRICAL ENGINEER
FLA. REG. NO. 14595

WA PROJECT NO.: 21524.00

ISSUE DATE
05/27/2016

NO.	REVISION DATE

DRAWING TITLE
POWER RISER DIAGRAM & PANEL

SHEET NUMBER
E3.02

P:\Seminoles Maintenance Building and Restrooms 2015\Drawings\CD\Visitor Restrooms\Electrical\E3.02-SVR.dwg Jun 02, 2016 - 5:56pm MTOLEDO

ELECTRICAL GENERAL NOTES

1- ALL CONDUCTORS SHALL BE COPPER RATED 75C WET/DRY EXCEPT WHERE OTHERWISE REQUIRED BY U.L. OR CODES, U.O.N. MINIMUM WIRE SIZE SHALL BE #12 AWG. EXCLUDING CONTROL WIRING.

2- ALL CONDUIT RISERS SHALL BE RIGID GALVANIZED STEEL (RGS) WHERE CONDUIT BENDS UPWARD FROM UNDERGROUND TO ABOVE GROUND, USE AN APPROVED PVC TO RGS COUPLER, AS REQUIRED. RGS CONDUITS SHALL EXTEND A MINIMUM OF 18" BELOW GRADE.

3- UNLESS NOTED AS EXISTING, ALL EQUIPMENT, WIRING DEVICES, ETC. SHALL BE NEW.

4- ENTIRE INSTALLATION SHALL BE IN ACCORDANCE WITH THE NATIONAL ELECTRICAL CODE, 2011 EDITION (NEC) AND THE LATEST APPLICABLE EDITIONS OF ALL LOCAL CODES, RULES AND ORDINANCES HAVING JURISDICTION.

5- ALL CONDUITS RUNS ARE SHOWN DIAGRAMMATICALLY, EXACT ROUTING SHALL BE DETERMINED IN THE FIELD, UNLESS OTHERWISE NOTED.

6- ALL DISCONNECT SWITCHES SHALL BE SIZED BY NEC TO ACCOMMODATE EQUIPMENT SERVED INCLUDING REQUIRED FUSES, UON. SWITCHES SHALL BE HORSE POWER RATED AND SIZED AS PER MOTOR NAMEPLATE CURRENT. HEAVY DUTY TYPE.

7- ALL ELECTRICAL EQUIPMENTS SHALL BE RAINTIGHT (NEMA 3R) WHERE EXPOSED TO THE WEATHER. ALL FLEX CONDUITS CONNECTED TO ELECTRICAL EQUIPMENT SHALL BE LIQUID TIGHT.

8- WIRE WAYS SHALL BE SIZED AS REQUIRED, PER NEC. UNLESS OTHERWISE NOTED (UON)

9- COORDINATE ALL ELECTRICAL SITE WORK WITH GENERAL CONTRACTOR.

10- FOR UNDERGROUND ELECTRICAL CONDUITS, PROVIDE PULL BOXES SUCH THAT NO SINGLE CONDUIT RUN HAS BEND IN EXCESS OF THREE 90 BENDS. PULL BOXES SHALL BE SUITABLE AND APPROVED FOR THE INTENDED USE. WARNING TAPE WHICH SAYS "WARNING BURIED ELECTRIC" SHALL BE PLACED IN TRENCHES ABOVE ALL UNDERGROUND ELECTRIC CONDUITS.

11- ALL CIRCUIT BREAKERS SHALL BE INVERSE TIME TYPE (THERMAL MAGNETIC). TWO AND THREE POLE CIRCUIT BREAKERS SHALL BE COMMON TRIP. NO TIE HANDLES PERMITTED.

12- ALL ELECTRICAL EQUIPMENT, DEVICES WIRE, ETC., SHALL BE LISTED FOR THE INTENDED USE, WITH (UNDERWRITER'S LABORATORIES, INC. (UL) WHERE STANDARDS HAVE BEEN ESTABLISHED BY UL.

13- ALL CONDUCTORS SHALL BE IN CONDUITS, ALL CONDUITS SHALL BE INTERMEDIATED (IMC) OR RIGID GALVANIZED STEEL (RGS) EXCEPT THAT: (A) POLY VINYL CHLORIDE (PVC) CONDUITS MAY BE USED IN CONCRETE SLABS AND UNDERGROUND PROVIDED ELBOWS AND RISERS ARE RGS; (B) LIQUID TIGHT FLEXIBLE CONDUIT WHERE REQUIRED; ALL CONDUITS SHALL MEET THE REQUIREMENT OF NEC.

14- COORDINATE ELECTRIC SERVICE WITH POWER COMPANY (GLADES ELECTRIC).

15- ELECTRICAL CONTRACTOR SHALL NOT SCALE DRAWINGS. CONTRACTOR SHALL REFER TO ARCHITECTURAL OR SURVEY PLANS AND ELEVATIONS FOR EXACT LOCATIONS OF ALL EQUIPMENT UNLESS NOTED OTHERWISE.

16- ELECTRICAL CONTRACTOR SHALL VISIT THE JOB SITE AND VERIFY ALL CONDITIONS, LOCATIONS, DIMENSIONS AND COUNTS AS SHOWN AND/OR NOTED ON THE DRAWINGS. THIS SHALL INCLUDE ANY AND ALL FABRICATIONS PRIOR TO INSTALLATION.

17- IT SHALL BE THE RESPONSIBILITY OF THE ELECTRICAL CONTRACTOR FOR THE ADVANCED ORDERING OF LONG LEAD ITEMS, AS NOT TO INTERFERE WITH THE PRODUCTION OF OTHER TRADES RESULTING IN ANY DOWN OR LAG TIME.

18- IT SHALL BE THE RESPONSIBILITY OF THE ELECTRICAL CONTRACTOR TO PROVIDE ALL LABOR, MATERIALS AND SUPERVISION NECESSARY TO ACCOMPLISH THE WORK AS SHOWN AND/OR NOTED ON THE DRAWINGS.

19- IT SHALL BE UNDERSTOOD THAT ALL WORK PERFORMED SHALL BE DONE BY A LICENSED ELECTRICAL CONTRACTOR AND IN A FIRST-CLASS WORKMANLIKE MANNER, SAID CONTRACTOR SHALL MEET ALL REQUIREMENTS SET FORTH BY ANY LOCAL ORDINANCE AND GOVERNING AUTHORITIES.

20- THE ELECTRICAL CONTRACTOR SHALL BE RESPONSIBLE TO REPAIR TO ORIGINAL CONDITIONS ANY AND ALL DAMAGED TO BUILDING SURFACES, EQUIPMENT AND FURNISHING CAUSED DURING PERFORMANCE OF WORK.

21- THE ELECTRICAL CONTRACTOR SHALL KEEP ALL AREAS IN WHICH WORK IS BEING PERFORMED, FREE FROM DEBRIS AT ALL TIMES.

22- IT SHALL NOT BE THE INTENT OF THESE PLANS AND/OR SPECIFICATION TO SHOW EVERY MINOR DETAIL OF CONSTRUCTION THE ELECTRICAL CONTRACTOR SHALL BE EXPECTED TO FURNISH AND INSTALL ALL ITEMS FOR A COMPLETE ELECTRICAL AND PROVIDE ALL REQUIREMENTS NECESSARY FOR EQUIPMENT TO BE PLACED IN PROPER WORKING ORDER.

23- WHERE CORE DRILLING OF FLOOR/WALLS IS REQUIRED, CONTRACTOR SHALL SEAL OPENING WATERTIGHT AFTER UTILITIES HAVE BEEN INSTALLED. LOCATION OF CORED HOLES SHALL COORDINATE WITH LOCATION OF EQUIPMENT IN A MANNER TO BE CLEAN AND FUNCTIONAL. THE CONTRACTOR SHALL INSTALL ONLY ONE CONDUIT PER HOLE AND SEAL THE OPENING AROUND THE CONDUIT AS SPECIFIED.

24- ELECTRICAL CONTRACTOR SHALL VERIFY CIRCUIT PROTECTIVE DEVICE RATING FOR EQUIPMENT PRIOR TO CONSTRUCTION.

25- ALL FUSES SHALL BE CURRENT LIMITING, PER U.L. RATED 600V. UON.

A- NONTIME DELAY FUSES IN MAIN SWITCHES AND SWITCHES FEEDING PANELS.

26- OUTLET BOXES SHALL BE PRESSED STEEL IN DRY LOCATIONS, CAST ALLOY WITH THREADED HUBS IN WET OR DAMP LOCATIONS AND SPECIAL ENCLOSURE FOR OTHER CLASSIFIED AREAS, AS REQUIRED BY NEC.

27- AS A MINIMUM, ALL EQUIPMENT SHALL MEET APPLICABLE STANDARDS, FOR THE TYPE OF EQUIPMENT AND INTENDED USE, OF THE FOLLOWING:
A. AMERICAN NATIONAL STANDARDS INSTITUTE (ANSI)
B. ILLUMINATING ENGINEERS SOCIETY (IES)
C. AMERICAN SOCIETY FOR TESTING AND MATERIALS (ASTM)
D. NATIONAL ELECTRICAL MANUFACTURER'S ASSOCIATES. (NEMA) NOTE: THESE STANDARDS ARE SUBORDINATE TO CODES AND STANDARDS SET BY U.L.

28- ELECTRICAL CONTRACTOR SHALL SUBMIT (6 COPIES) OF EQUIPMENT LAYOUT FOR ALL ELECTRICAL SPACES, ROOMS, ETC. LAYOUT SHALL CONSIST OF PLAN VIEWS (SCALED AT 1/2"=1'-0") AND ELEVATIONS (DIMENSIONED) FOR EACH SUCH SPACE, ROOM, ETC.

29- ALL CONNECTIONS TO GROUND RODS SHALL BE MADE WITH UL APPROVED WELDED CONNECTIONS, UNLESS NOTED OTHERWISE.

30- PROVIDE FIRE RETARDANT U.L. APPROVED SEALANT ON ALL PENETRATIONS OF FIRE RATED PARTITIONS, WALL AND STRUCTURAL SLABS. IT SHALL BE THE RESPONSIBILITY OF THE ELECTRICAL CONTRACTOR TO VERIFY, PRIOR TO SUBMITTING BID, LOCATION OF ALL SUCH FIRE RATED PARTITIONS, WALL AND STRUCTURAL SLABS.

31- CONTRACTOR TO VERIFY AVAILABLE SERVICE VOLTAGE AND PHASES WITH GLADES ELECTRIC PRIOR TO BID. AND PROVIDE BID ALLOWANCE FOR ALTERNATES.

32- METER CANS, HUBS, & LUGS FOR SAME ARE TO BE FURNISHED AND INSTALLED BY ELECTRICAL CONTRACTOR. ELECTRICAL CONTRACTOR TO VERIFY SPECIFIC TYPE OF METER CAN TO BE USED WITH GLADES ELECTRIC PRIOR TO BID.

33- CONTRACTOR SHALL PROVIDE A TYPE WRITTEN DIRECTORY OF EACH PANEL SCHEDULE, INSIDE EACH PANEL BOARD HAND WRITTEN DIRECTORY IS NOT ACCEPTABLE.

34- EMT, ENT, IMC OR PVC IS PERMITTED AS APPROVED BY LOCAL CODES UTILITY COMPANIES AND VENDOR SPECIFICATION.

35- ALL DISCONNECT SWITCHES INDICATED AS W.P. ARE NEMA 3R TYPE. ALL THE OTHER DISCONNECT SWITCHES LOCATED INSIDE THE BUILDING ARE NEMA 1 TYPE (TYP.)

CODING: 120/208V.

PHASE:
- A — BLACK
- B — RED
- C — BLUE
- N — WHITE
- G — GREEN

36- ALL CABLES IN OR BELOW GRADE SHALL BE SUITABLE FOR WET LOCATIONS AS PER NEC 310.8 (C).

37- PROVIDE PERMANENT SIGNAGE ON ALL EMERGENCY MAINS AND WHERE REQUIRED AS PER NEC. 700.8

38- EXISTING UTILITIES AND SYSTEMS PRIOR TO COMMENCING ANY EXCAVATION, CORE DRILLING, ETC... EMPLOY AN UNDERGROUND SERVICE LOCATOR FIRM TO ENSURE THAT EXISTING UTILITIES ARE ACCURATELY LOCATED AND THAT THEY WILL NOT BE DISTURBED. AT NO ADDITIONAL COST TO OWNER, CONTRACTOR SHALL REPAIR ANY DAMAGE TO EXISTING UTILITIES AND SYSTEMS WHICH OCCURS AS A RESULT OF OPERATIONS PERFORMED UNDER THIS CONTRACT. REPAIRS TO EXISTING SHALL BE MADE USING MATERIALS AND METHODS TO MATCH EXISTING CONSTRUCTION AND SHALL BE APPROVED BY THE ENGINEER PRIOR TO RE-COVERING.

39- THE CONTRACTOR SHALL SUPPLY AND INSTALL ALL THE REQUIRED GROUNDING CONDUCTORS, CONNECTORS AND RODS TO COMPLETE THE GROUNDING ELECTRODE SYSTEM AND GROUND RING AS PER NEC 250.50 THROUGH NEC 250.64 INCLUSIVE.

40- ALL ELECTRICAL WORK SHALL BE INSTALLED ABOVE BASE FLOOD ELEVATION.

LIGHTING FIXTURE SCHEDULE

TYPE	DESCRIPTION	MANUFACTURER	CATALOG NUMBER	WATTS	COLOR	SOURCE	VOLT	MOUNTING	REMARKS
A	6" DOWN LIGHT	PHILIPS	P6RD 20 N U VB 40 CC	21	840	LED	120	RECESSED	
A1	6" DOWN LIGHT	PHILIPS	P6RD 20 N U VB 40 CC	21	840	LED	120	RECESSED	WITH BATTERY PACK
B	CANOPY FIXTURE	LUMINAIRE	FFW1212 25W 40K OP	(2) 9	–	LED	120	SURFACE	
C	EXTERIOR WALLPACK	HE WILLIAMS	VWPV LED 32 740 T3	45	740	LED	120	WALL	WALL LOCATION LISTED
D	LED VAPORTITE	BEGHELLI	BS 100 45A 50WELD	–	–	–	120	UNIVERSAL	WITH BATTERY PACK
X1	EXIT SIGN	BEGHELLI	FME SA LR UM	3			120	UNIVERSAL	WITH BATTERY PACK

LIGHTING SCHEDULE NOTES:

MANUFACTURER AND CATALOG NUMBER LISTED ESTABLISHES THE MINIMUM LEVEL OF QUALITY ACCPTABLE. PROJECT MUST BE BID AS SPECIFIED. ANY ALTERNATE TO THE BASE BID MUST BE ACCOMPANED BY A CREDIT TO THE OWNER WHICH WILL BE EVALLUATED BY THE A/E.

1- IN THE EVENT OF ANY DISCREPANCY BETWEEN FIXTURE DESCRIPTION AND THE CATALOG NUMBER LISTED THE DESCRPTION WILL TAKE PRECEDENCE AND THE DISCREPANCY SHALL BE BROUGHT TO THE A/E'S ATTENTION PRIOR TO BIDDING.

2- ALL FIXTURES SHALL BE U.L. LISTED.

3- ALL FLUORESCENT FIXTURES SHALL BE PROVIDED WITH INTERNAL THERMAL PROTECTION AS PER NEC 430.73(E). ALL DOUBLE ENDED FLUORESCENT FIXTURES WILL ALSO BE PROVIDED WITH INTERNAL DISCONNECT AS PER NEC 410.73(G)

4- ALL EXIT SIGNS AND EMERGENCY LIGHTING ARE 90 MINUTES BATTERY BACK-UP.

SYMBOL LEGEND ELECTRICAL

LIGHTING FIXTURES

- 1'x4' FLUORESCENT LUMINAIRE, CEILING/WALL
- 1'x4' FLUORESCENT LUMINAIRE, BATTERY/EMERGENCY, CEILING/WALL
- DOWNLIGHT FIXTURE
- DOWNLIGHT FIXTURE, BATTERY/EMERGENCY
- P — PHOTOCELL
- SINGLE FACE EXIT LIGHT ARROW INDICATES DIRECTION OF EGRESS
- A — LIGHT FIXTURE TYPE, SEE LIGHTING FIXTURE SCHEDULE.

SWITCHES

- S — SINGLE POLE LIGHT SWITCH 120/277V MTD. @ 48" A.F.F.

LIGHTING CONTROL DEVICES

- OS — WATTSTOPPER DT-355 OCCUPANCY SENSOR DUAL TECHNOLOGY (PASSIVE INFRARED MICROPHONIC) CEILING MOUNTED. SET TIME 30 MIN.

POWER DISTRIBUTION

- DUPLEX WALL RECEPTACLE, SURFACE MOUNTED @ 18" A.F.F. U.O.N.
- GFI — DUPLEX RECEPTACLE SURFACE MOUNTED WITH GROUND FAULT CIRCUIT INTERRUPTER
- DISCONNECT SWITCH, NUMBER OF POLES AND RATING AS INDICATED ON PLANS
- JUNCTION BOX
- METERS
- 120/208V PANELBOARD
- UNDERGROUND CONDUIT
- CONDUIT AND WIRE RUN EXPOSED ON CEILING WALL.
- BRACH CIRCUIT HOMERUN: LONG HASHMARK WITH FLAG DENOTES GROUND WIRE. LONG HASHMARK WITHOUT FLAG DENOTES NEUTRAL WIRE. SHORT HASHMARK DENOTES PHASE WIRE.
- GFI — DUPLEX RECEPTACLE SURFACE MOUNTED WITH GROUND FAULT CIRCUIT INTERRUPTER

MISCELLANEOUS SYMBOL LEGEND

- XX — DETAIL NUMBER
- TITLE — DETAIL TITLE REFERENCE
- XX.XX SCALE: XX.XX — SHEET NUMBER WHERE DETAIL IS REFERENCED
- ADDITIONAL SHEET REFERENCES
- XX — DETAIL NUMBER
- XX.XX — SHEET NUMBER WHERE DETAIL IS REFERENCED

ABBREVIATIONS

A, AMP	AMPERES
A.F.F.	ABOVE FINISHED FLOOR
COND.	CONDUIT
CKT	CIRCUIT
CLG	CEILING
DISC	DISCONNECT(ING)
DWG	DRAWING(S)
EXIST	EXISTING
GND	GROUND
JB	JUNCTION BOX
KVA	KILO-VOLTS-AMPERES
MAX	MAXIMUM
MCB	MAIN CIRCUIT BREAKER
MIN	MINIMUM
MISC	MISCELLANEOUS
MTD	MOUNTED
MTG	MOUNTING
NEC	NATIONAL ELECTRICAL CODE
O.C.	ON CENTER
PNL	PANEL
PVC	POLYVINYL CHLORIDE
RGS	RIGID GALVANIZED STEEL
TYP	TYPICAL
UON	UNLESS OTHERWISE NOTED
V	VOLTS
W	WATTS
WP	WEATHER PROOF

WOLFBERG ALVAREZ
ARCHITECTURE · ENGINEERING
3225 AVIATION AVE., SUITE 400
MIAMI, FLORIDA 33133
V 305.666.5474
F 305.666.4994
WOLFBERGALVAREZ.COM
AA 002416 EB 002354

SEMINOLE AH-TAH-THI-KI VISITOR RESTROOM
34600 W BOUNDARY ROAD
CLEWISTON, FL 33440

SEAL

JULIO E. ALVAREZ, P.E.
ELECTRICAL ENGINEER
FLA. REG. NO. 14595

WA PROJECT NO.: 21524.00

ISSUE DATE
05/27/2016

NO.	REVISION DATE

DRAWING TITLE
LEGEND GENERAL NOTES

SHEET NUMBER
E1.01

P:\Seminoles Maintenance Building and Restrooms 2015\Drawings\CD\Visitor Restrooms\Electrical\E1.01-SHR.dwg Jun 02, 2016 - 5:33pm MTOLEDO

To the best of the Architect's or Engineer's knowledge, the plans and specifications comply with the applicable minimum codes and the applicable fire-safety standards as determined by the local authority in accordance with F.B.C. section 110.3.7.4.4 and Chapter 633, Florida Statutes.

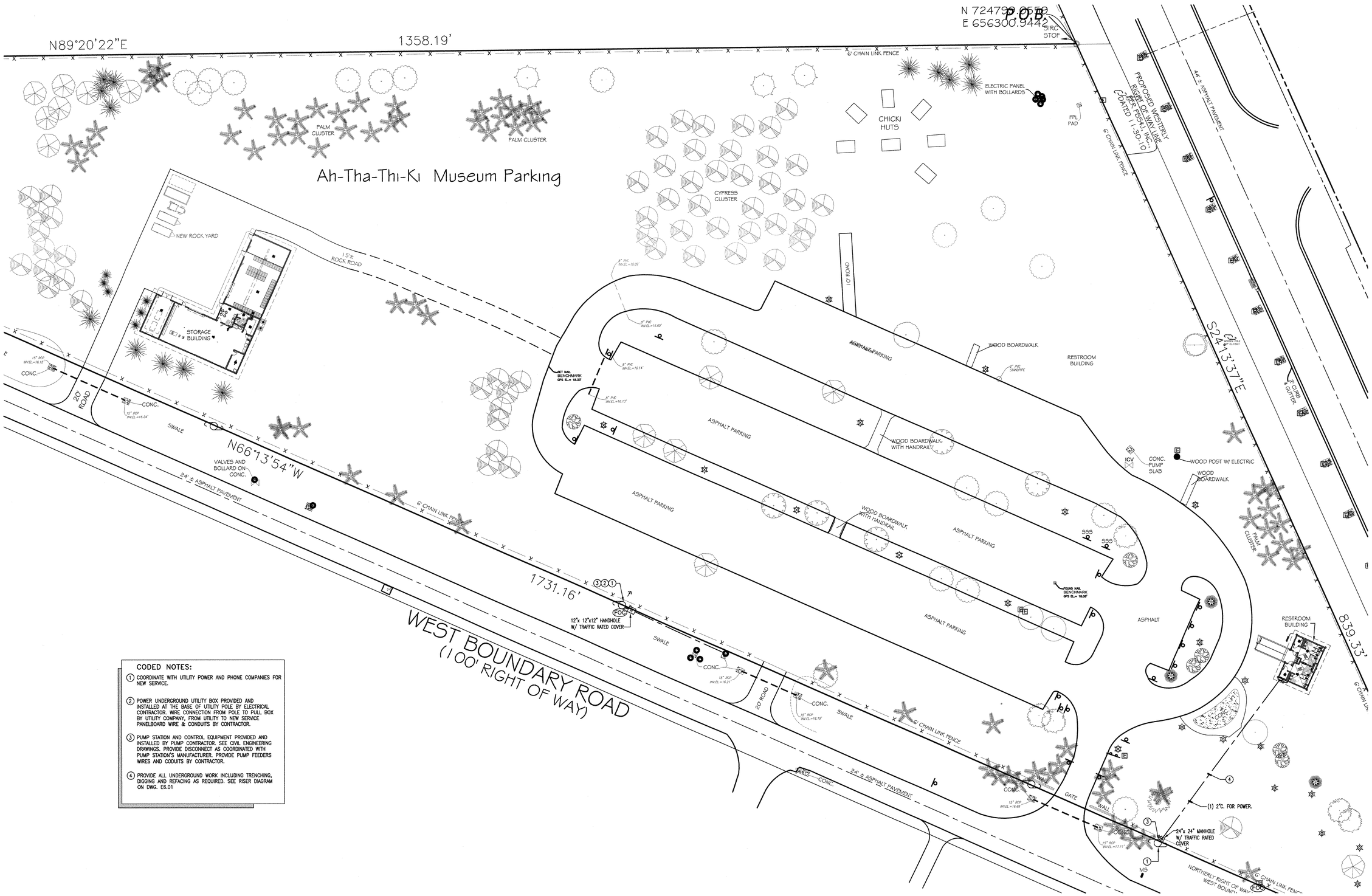

CODED NOTES:

1. COORDINATE WITH UTILITY POWER AND PHONE COMPANIES FOR NEW SERVICE.
2. POWER UNDERGROUND UTILITY BOX PROVIDED AND INSTALLED AT THE BASE OF UTILITY POLE BY ELECTRICAL CONTRACTOR. WIRE CONNECTION FROM POLE TO PULL BOX BY UTILITY COMPANY, FROM UTILITY TO NEW SERVICE PANELBOARD WIRE & CONDUITS BY CONTRACTOR.
3. PUMP STATION AND CONTROL EQUIPMENT PROVIDED AND INSTALLED BY PUMP CONTRACTOR. SEE CIVIL ENGINEERING DRAWINGS. PROVIDE DISCONNECT AS COORDINATED WITH PUMP STATION'S MANUFACTURER. PROVIDE PUMP FEEDERS WIRES AND CODUITS BY CONTRACTOR.
4. PROVIDE ALL UNDERGROUND WORK INCLUDING TRENCHING, DIGGING AND REFACING AS REQUIRED. SEE RISER DIAGRAM ON DWG. E8.01

1 / E1.02 OVERALL ELECTRICAL SITE PLAN
SCALE: 1"= 30'-0"

WOLFBERG ALVAREZ
ARCHITECTURE · ENGINEERING
3225 AVIATION AVE., SUITE 400
MIAMI, FLORIDA 33133
V 305.666.5474
F 305.666.4994
WOLFBERGALVAREZ.COM
AA 002416 EB 002354

SEMINOLE AH-TAH-THI-KI VISITOR RESTROOM

34600 W BOUNDARY ROAD
CLEWISTON, FL 33440

SEAL

JULIO E. ALVAREZ, P.E.
ELECTRICAL ENGINEER
FLA. REG. NO. 14595

WA PROJECT NO.: 21524.00

ISSUE DATE
05/27/2016

NO.	REVISION DATE

DRAWING TITLE
OVERALL ELECT. SITE PLAN

SHEET NUMBER
E1.02

P:\Seminoles Maintenance Building and Restrooms 2015\Drawings\CD\Visitor Restrooms\Electrical\E1.02-SVR.dwg Jun 02, 2016 - 6:18am MTOLEDO

To the best of the Architect's or Engineer's knowledge, the plans and specifications comply with the applicable minimum codes and the applicable fire-safety standards as determined by the local authority in accordance with F.B.C. section 110.3.7.4.4 and Chapter 633, Florida Statutes.

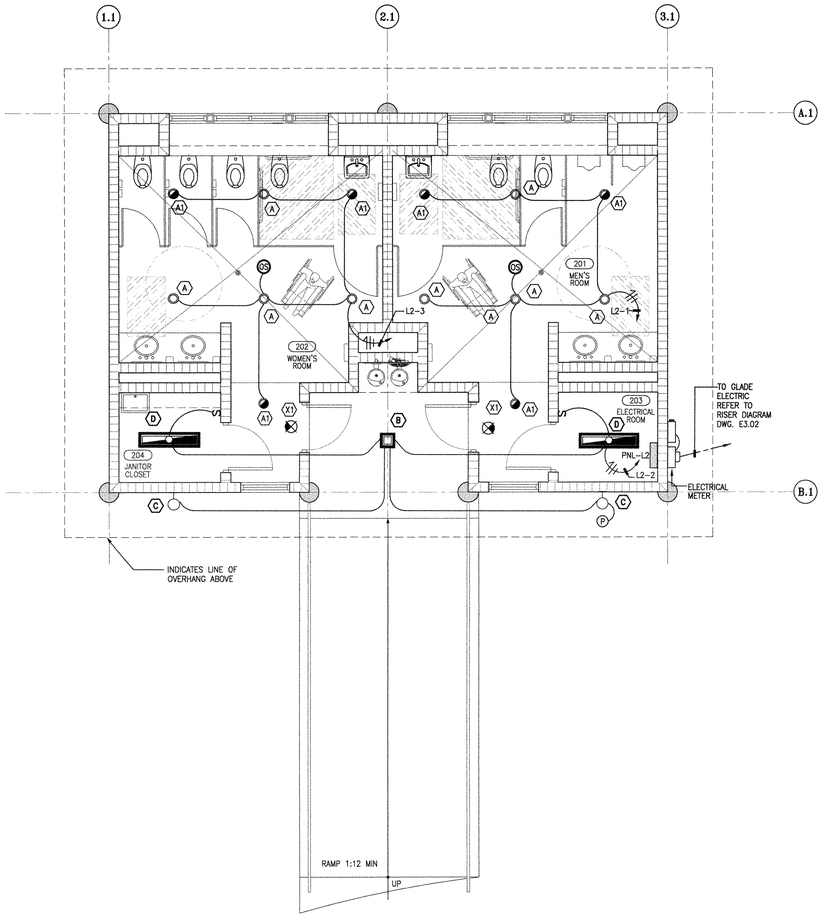

1 E3.01 RESTROOM BUILDING LIGHTING PLAN
SCALE: 1/4"=1'-0"

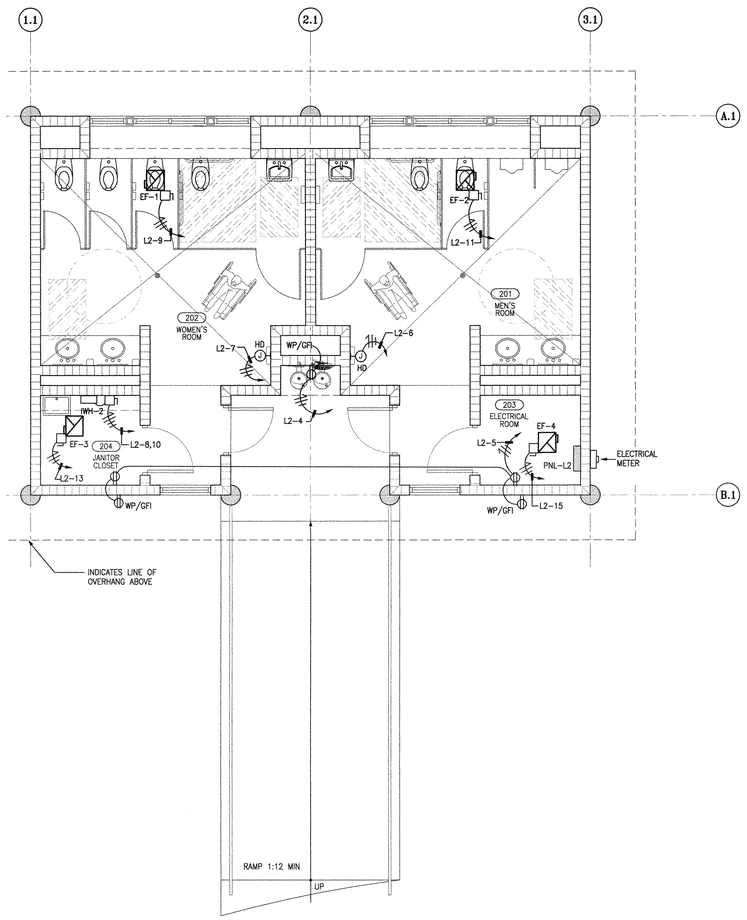

2 E3.01 RESTROOM BUILDING POWER & SYSTEMS PLAN
SCALE: 1/4"=1'-0"

WOLFBERG ALVAREZ
ARCHITECTURE ENGINEERING
3225 AVIATION AVE., SUITE 400
MIAMI, FLORIDA 33133
V 305.666.5474
F 305.666.4994
WOLFBERGALVAREZ.COM
AA 002416 EB 002354

SEMINOLE AH-TAH-THI-KI VISITOR RESTROOM

34600 W BOUNDARY ROAD
CLEWISTON, FL 33440

SEAL

JULIO E. ALVAREZ, P.E.
ELECTRICAL ENGINEER
FLA. REG. NO. 14595

WA PROJECT NO.: 21524.00

ISSUE DATE
05/27/2016

NO.	REVISION DATE

DRAWING TITLE
RESTROOM BUILDING PLANS

SHEET NUMBER
E3.01

P:\Seminoles Maintenance Building and Restrooms 2015\Drawings\CD\Visitor Restrooms\Electrical\E3.01-SYS.dwg Jun 02, 2016 - 5:55pm MTOLEDO

To the best of the Architect's or Engineer's knowledge, the plans and specifications comply with the applicable minimum codes and the applicable fire-safety standards as determined by the local authority in accordance with F.B.C. section 110.3.7.4.4 and Chapter 633, Florida Statutes.