INFINITY
REFRIGERATION

Refrigeration System
Installation & Operation Manual

IQUBE Packaged Refrigeration Unit (Top Mount)

January 2017

Contents : Installation Instructions , Controller Guide , Trouble Shooting / Maintenance , Wiring Diagram and Warranty

INFINITY
REFRIGERATION

9419 Ann Street, Santa Fe Springs, CA 90670 Ph : 1-888-328-9050

Page Intentionally Left Blank

Table of Contents

1. Installation Instructions

Inspection and Safety Information..... Pg. 4
Performance and Electrical Specifications..... Pg. 5
Dimensional Data..... Pg. 6-8
Unit Placement Requirement..... Pg. 8-12
Installation Procedure..... Pg. 13-15
Outdoor Kit Installation Guide..... Pg. 15-18
Sequence of Operation..... Pg. 19-21

2. Controller Guide

Controller Operation..... Pg. 21-28
Controller Settings/ Parameters..... Pg. 38-38

3. Service

Trouble Shooting..... Pg. 39-40
Maintenance..... Pg. 41-43
Wiring Diagrams..... Pg. 44-49

4. Warranty

Warranty Statement..... Pg. 50

Inspection

Important : Upon arrival of the equipment, please carefully check each shipment against the bill of lading. Before signing the delivery receipt (accepting the shipment), visually inspect the packaging for any signs of damage or if any equipment listed on the bill of lading is missing. If there are any damages or missing equipments, it should be noted on the delivery receipt and a claim should be filed directly with the freight carrier. Equipments should not be returned to the manufacturer before prior approval as any damages/losses become the responsibility of the freight carrier. After receiving the unit, unpack the equipment with care to avoid any damages. It is recommended to keep the equipment on its pallet until it is moved to its final destination.

General Safety Information

Installation and maintenance should only be performed by licensed contractor or technician.
Make sure to disconnect any power source to the unit before any service work is done.
Caution should be taken when moving or rigging the unit as the metal edges and coil surfaces may be sharp and are potential injury hazards (wearing gloves is recommended).
Do not run the fan motors if the fan guard is off to avoid injuries and electrical shock.
Remember to keep fingers away from any moving parts.
Avoid touching any refrigerant lines as they can be very hot and cause burns.
Avoid performing any service work in the rain (outdoor type) to prevent electrical shocks.
Make sure that the structural integrity of the walk in box can withstand the weight of the unit. (See page 5, Table 1-2 for weights).

Performance and Electrical Specifications

Table 1. Medium Temperature (Air Defrost)

Model	Voltage/ Phase/Hz	RLA/ LRA	MCA	MOPD	Unit Amps	Evap Fan Qty/CFM	NEMA Recept.	Power Cord Supplied	Refrigerant Charge R404A (Oz)	Fig.	Approx Net Weight
IQT031MRA	115/60/1	8.1/64	11.1	15	6.2	1/400	5-20R	YES	22.9	1	203 LB
IQT050MRA	115/60/1	10.9/64	14.5	20	11.4	1/400	5-20R	YES	33.5	2	265 LB
IQT050MRB	208-230/60/1	5/32.2	7.1	15	5.3	1/400	6-15R	YES	33.5	2	265 LB
IQT067MRB	208-230/60/1	6.2/32.5	9.1	15	6.4	2/800	6-15R	YES	35.3	2	274 LB
IQT075MRB	208-230/60/1	6.2/32.5	9.1	15	6.4	2/800	6-15R	YES	35.3	2	274 LB
IQT103MRB	208-230/60/1	8.3/51	12.7	20	9.2	3/1200	6-20R	YES	42.3	3	397 LB
IQT140MRB	208-230/60/1	10.9/49.3	15.9	20	11.4	3/1200	6-20R	YES	45.9	3	406 LB

Model	HP	Compressor	Capacity (BTUH) @ Ambient Temp 90˚F - 110˚F								Total Heat of Rejection (BTUH)
			90˚ F		95˚F		100˚F		110˚F		
			Holding / Room Temperature˚ F								
			35˚ F	38˚ F	35˚ F	38˚ F	35˚ F	38˚ F	35˚ F	38˚ F	
IQT031MRA	1/3	SC15MLX.2	3200	3400	3180	3380	3150	3350	3100	3300	12600
IQT050MRA/B	1/2	SC15MLX.2	5250	5540	5020	5350	4890	5210	4490	4790	16900
IQT067MRB	3/4	SC18MLX.2	7570	8030	6960	7390	6700	7110	5800	6160	16900
IQT075MRB	1	SC18MLX.2	8070	8700	7250	7800	6900	7420	5930	6390	16900
IQT103MRB	1.5	MTZ018-1VM	10530	11350	10340	11140	9580	10340	8460	9150	30700
IQT140MRB	2	MTZ022-1VM	16400	17760	15430	16740	14460	15730	13980	15220	30700

Table 2. Low Temperature (Electric Defrost)

Model	Voltage/ Phase/Hz	RLA/LRA	MCA	MOPD	Unit Amps	Evap Fan Qty/CFM	NEMA Recept.	Power Cord Supplied	Refrigerant Charge R404A (Oz)	Fig.	Approx Net Weight
IQT042LRB	208-230/60/1	4.4/43.7	6.8	15	9.5	2/800	6-20R	YES	28.2	2	296 LB
IQT066LRB	208-230/60/1	10.7/72	20	25	13	3/1200	6-20R	NO	38.8	3	415 LB
IQT100LRB	208-230/60/1	22.5/97	30.6	50	18.7	3/1200	6-30R	NO	77.6	4	463 LB

Model	HP	Compressor	Capacity (BTUH) @ Ambient Temp 90˚F - 110˚F											
			90˚ F			95˚F			100˚F			110˚F		
			Holding / Room Temperature˚ F											
			-20˚ F	-10˚F	0˚ F	-20˚ F	-10˚F	0˚ F	-20˚ F	-10˚F	0˚ F	-20˚ F	-10˚F	0˚ F
IQT042LRB	1.5	NTZ048-1VM	3330	4500	5740	3180	4170	5400	2930	3820	4940	2550	3310	4170
IQT066LRB	2	NTZ068-1VM	5150	7120	8540	4710	6510	7910	4270	5910	7130	3550	4850	6670
IQT100LRB	3	NTZ096-1VM	7965	11265	12706	6976	8998	11587	6223	9143	10291	4942	7106	10669

Model	Heat of Rejection (BTUH)
IQT042LRB	16900
IQT066LRB	30700
IQT100LRB	44100

Dimensional Data

Fig. 1 Indoor Unit Opening Size 15" x 21"

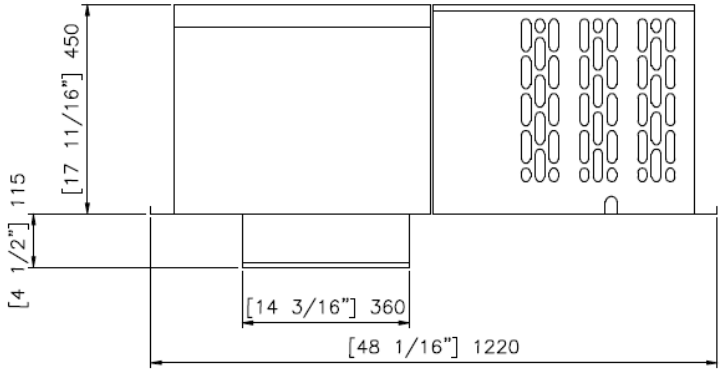

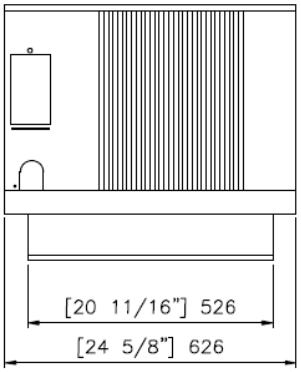

Fig. 2 Indoor Unit Opening Size 25" x 25"

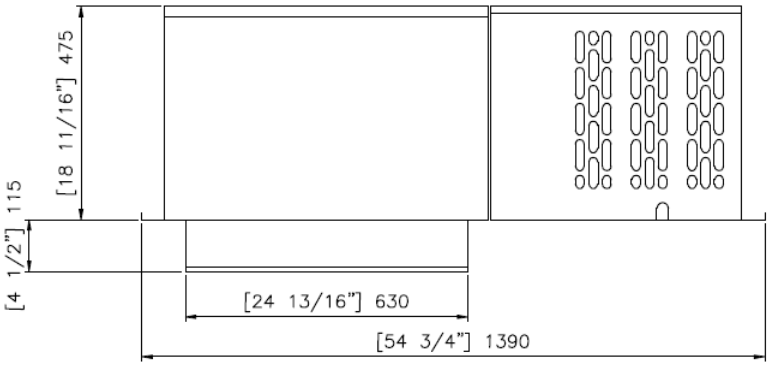

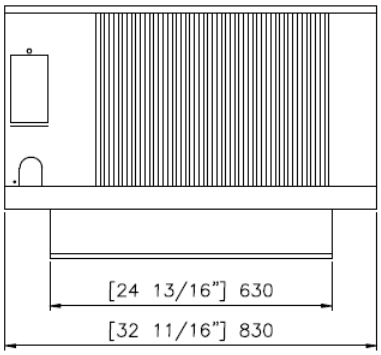

Fig. 3 Indoor Unit Opening Size 25" x 39"

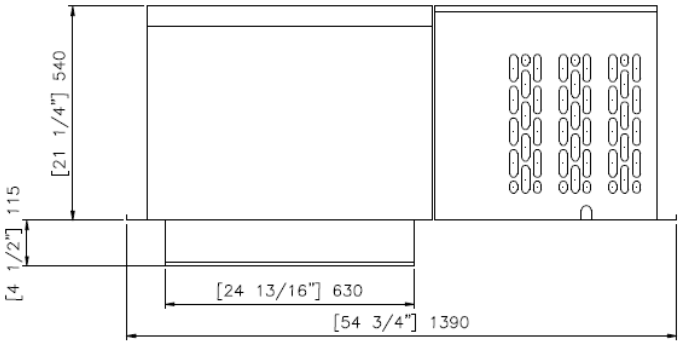

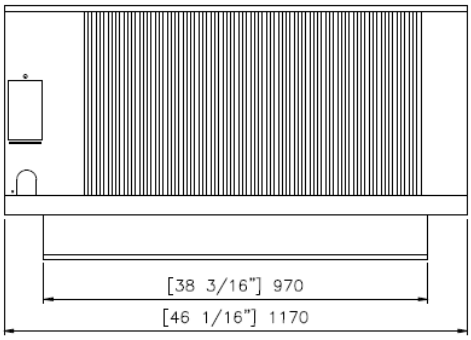

Fig. 4 Indoor Unit Opening Size 25" x 39"

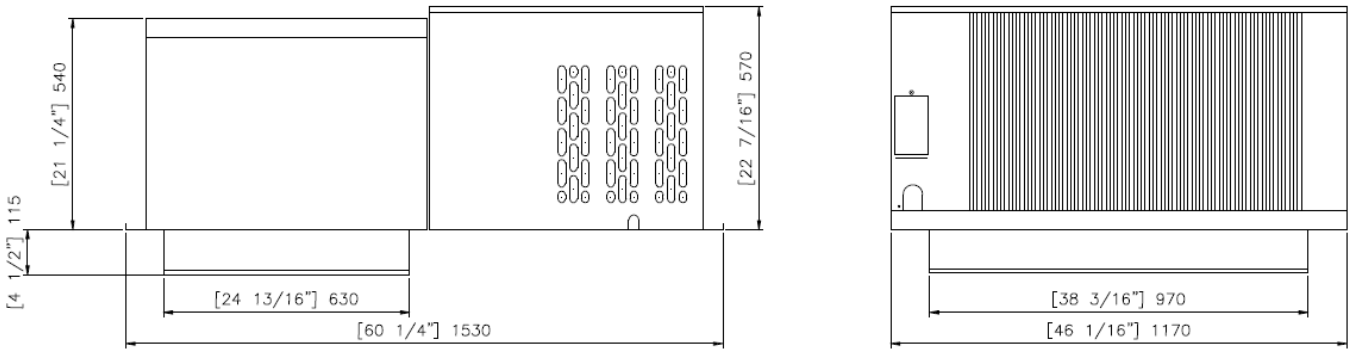

Fig. 2 With Outdoor Kit Opening Size 25" x 25"

(Fig. 2, Pg 6)

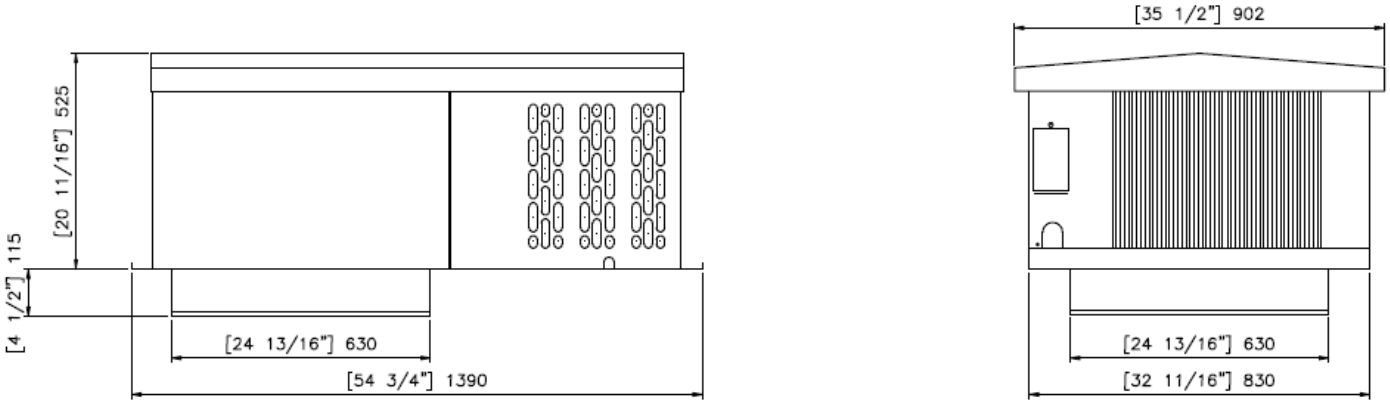

Fig. 3 With Outdoor Kit Opening Size 25" x 39"

(Fig. 3, Pg 6)

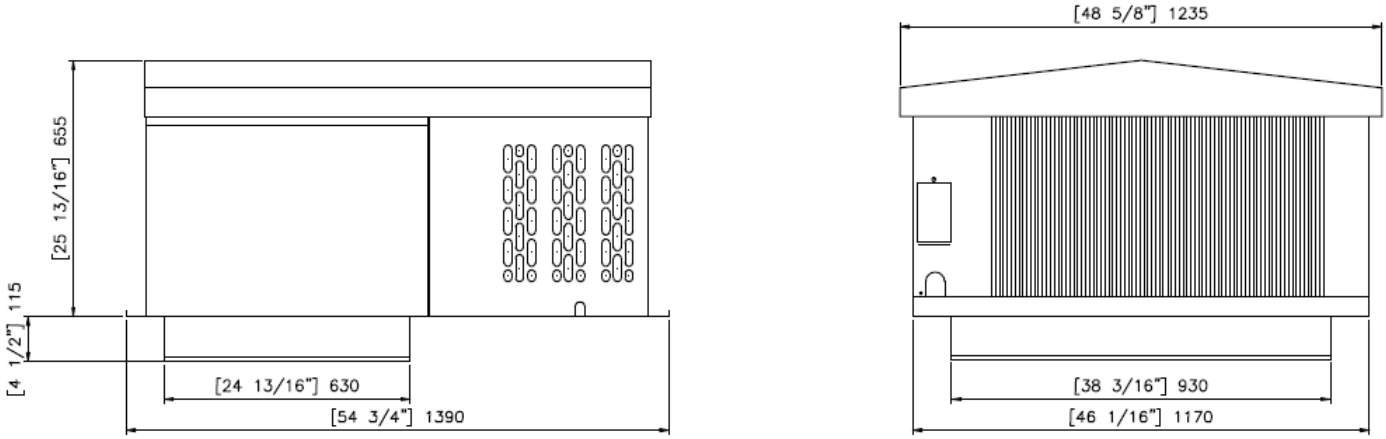

Fig. 4 With Outdoor Kit Opening Size 25" x 39

(Fig. 4, Pg 7)

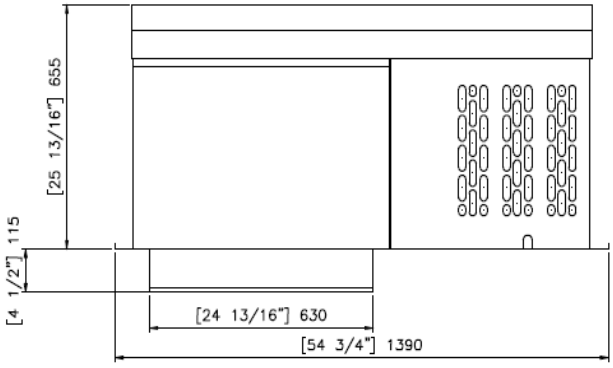

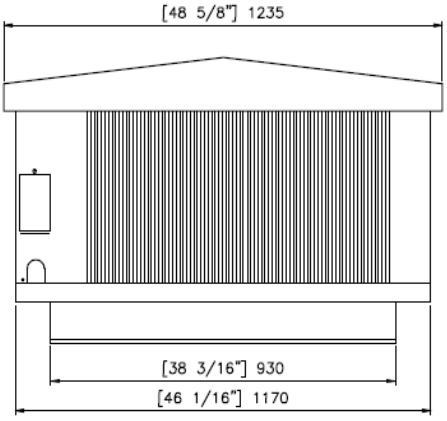

Unit Placement Requirement

General Information

Important: The following guidelines must be considered when deciding where to place the equipment. If these guidelines are not followed correctly, it can result in premature failure and may contribute to poor operation of the equipment. Improper installation will void the warranty of the equipment.

1. Confirm that the structural integrity of the box can withstand the weight of the unit(s).(Shown in Table 1 - 2, page 5).

2. Shipping skid should not be removed from the equipment until it is ready to be raised to the top of the walk-in box.

3. Air-Cooled Condensing equipment need adequate supply of ambient air to the condensing unit for optimal performance. The room where the unit will be installed will need proper ventilation or be large enough to sustain the heat rejection of the unit. (Refer to Table 1-2, page 5). Do not enclose the unit in an unventilated space as it will lead to poor operation of the equipment. Storage should not be allowed on top of the walk in box as it will impede the air flow required for the equipment. Do not place the unit in area of steam, hot air or fume exhaust.

4. Minimum clearance of 2FT above the unit is required for servicing.

5. Indoor units are designed to work in ambient temperatures of 50°F ~ 100°F. Outdoor units are designed to work in ambient temperatures of -30°F ~ 110°F

6. Indoor units should not be installed outdoors without an outdoor kit.

7. Unit should be located away from noise sensitive areas. Make sure the unit has adequate support to avoid excessive noise and vibration.

Recommended Unit Placement

Some general rules to be considered during placement of the units:

1. Again, make sure the structural integrity of the unit can support the weight of the unit. Do not attempt to install the unit with any of the panel cam locks unlocked or removed.

2. Air flow should cover the entire room. Airflow should not be hitting the walk-in wall directly. (Refer to Diagram 2, Side View). Stocking too high and close to the evaporator section will also cause poor air circulation.

3. NEVER locate the evaporator section of the unit over doors. This will cause issues with the system performance.

(Please refer to the following diagrams for minimum clearances for the unit)

Diagram 1. Top View

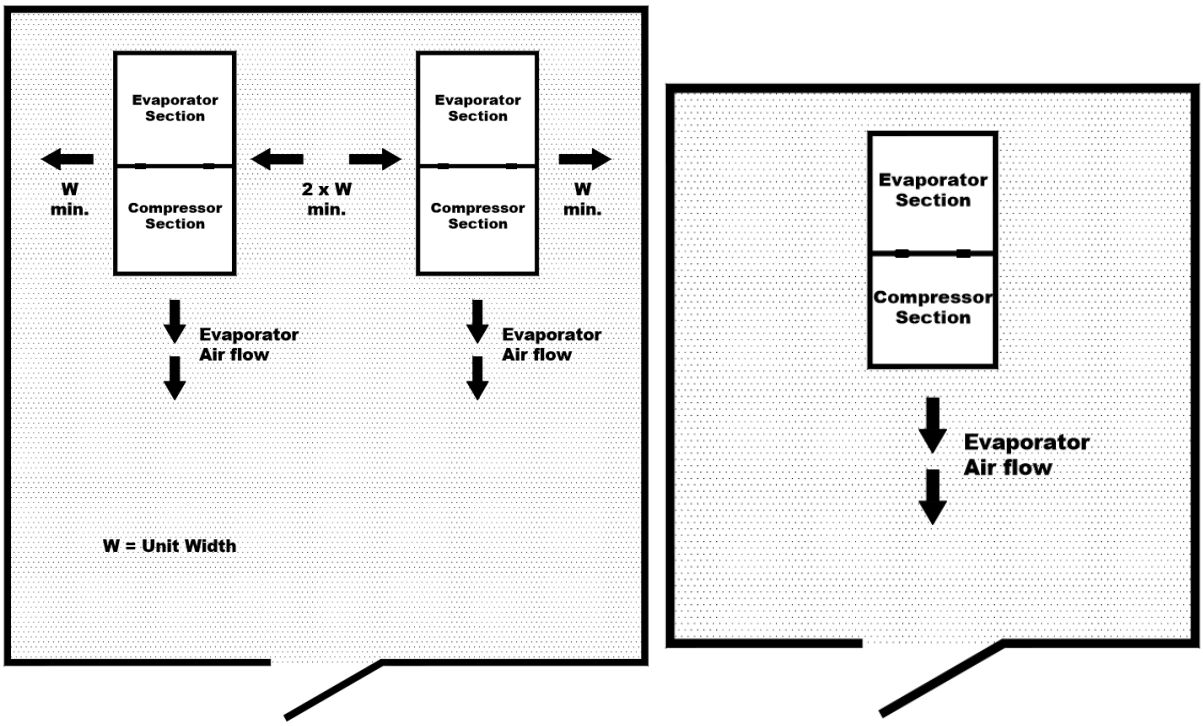

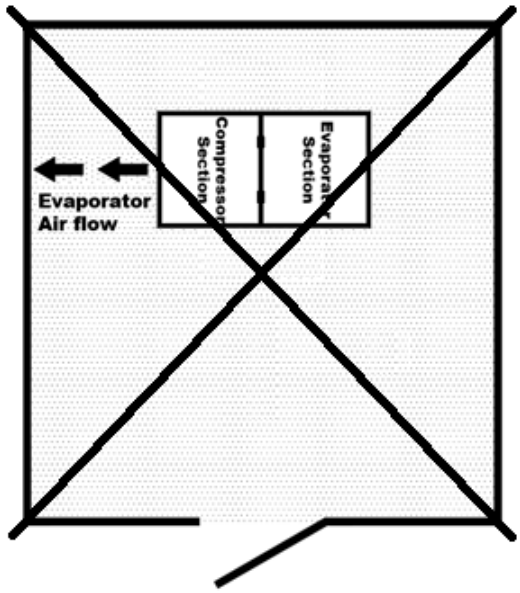

Note: Air flow should be directed towards the walk-in door. Avoid placing the unit sideways as shown in the diagram to the left. Placing the unit sideways will lead to uneven air flow distribution.

Diagram 2. Side View

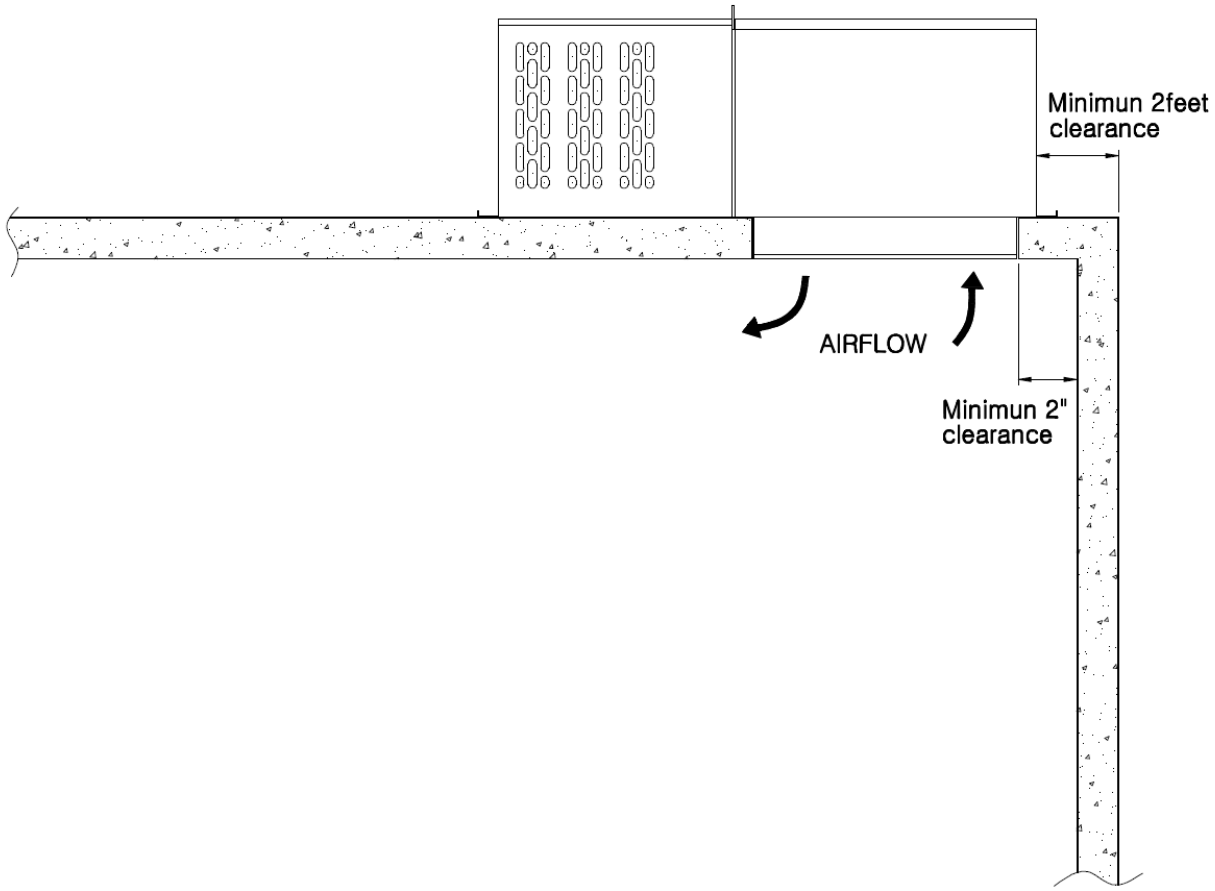

Cabinet Foot Print

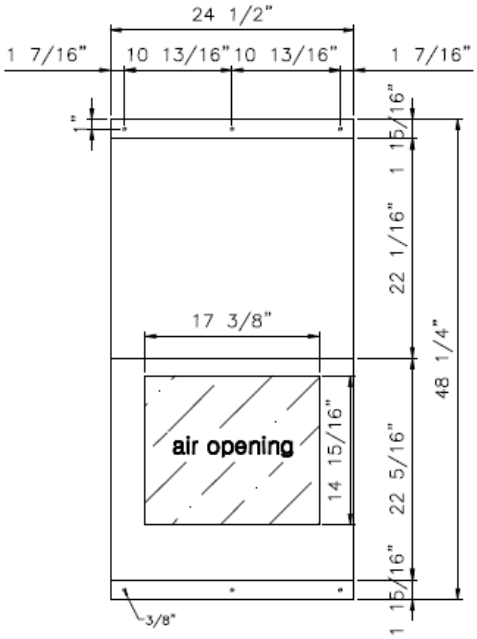

Fig.1

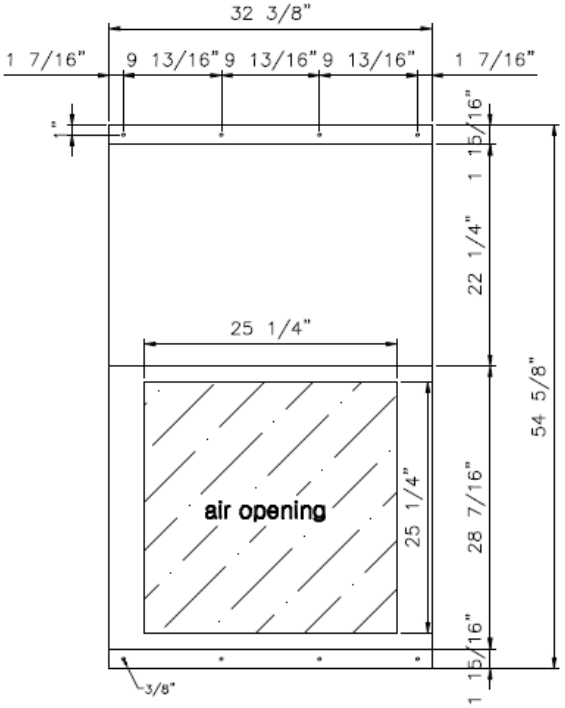

Fig.2

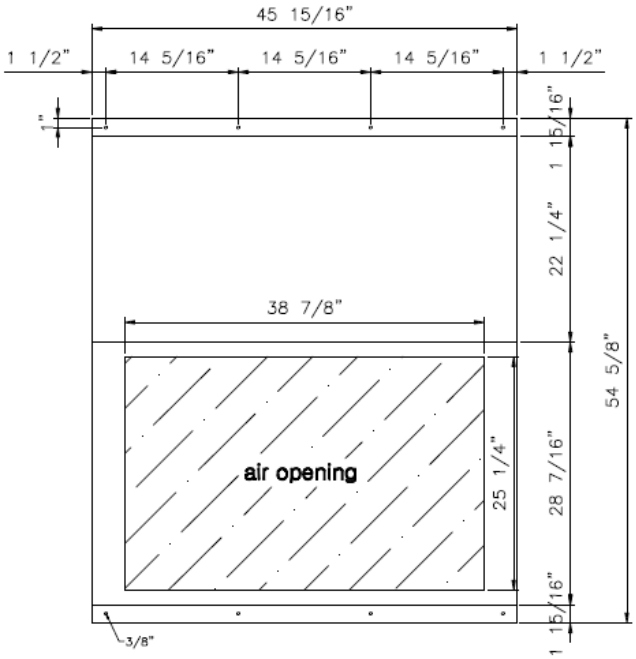

Fig.3

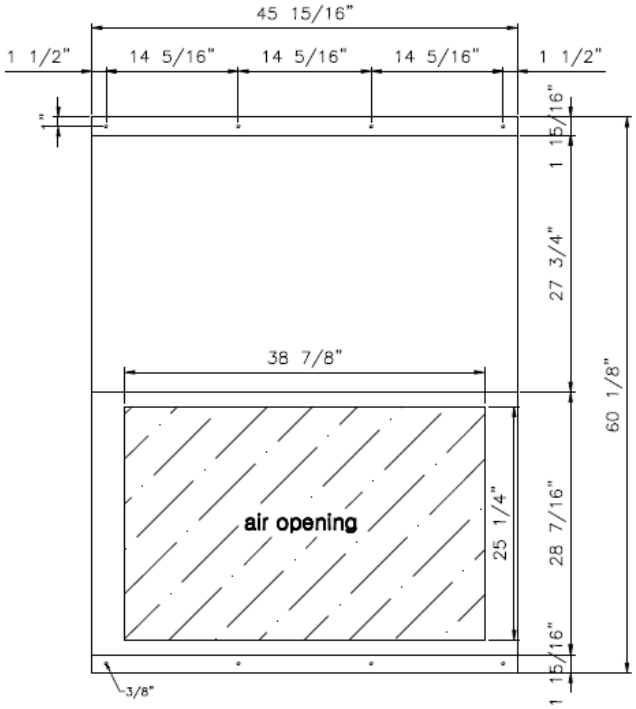

Fig.4

Outdoor Application with Outdoor Kit Only

Required to be curb mounted (curb supplied by others).

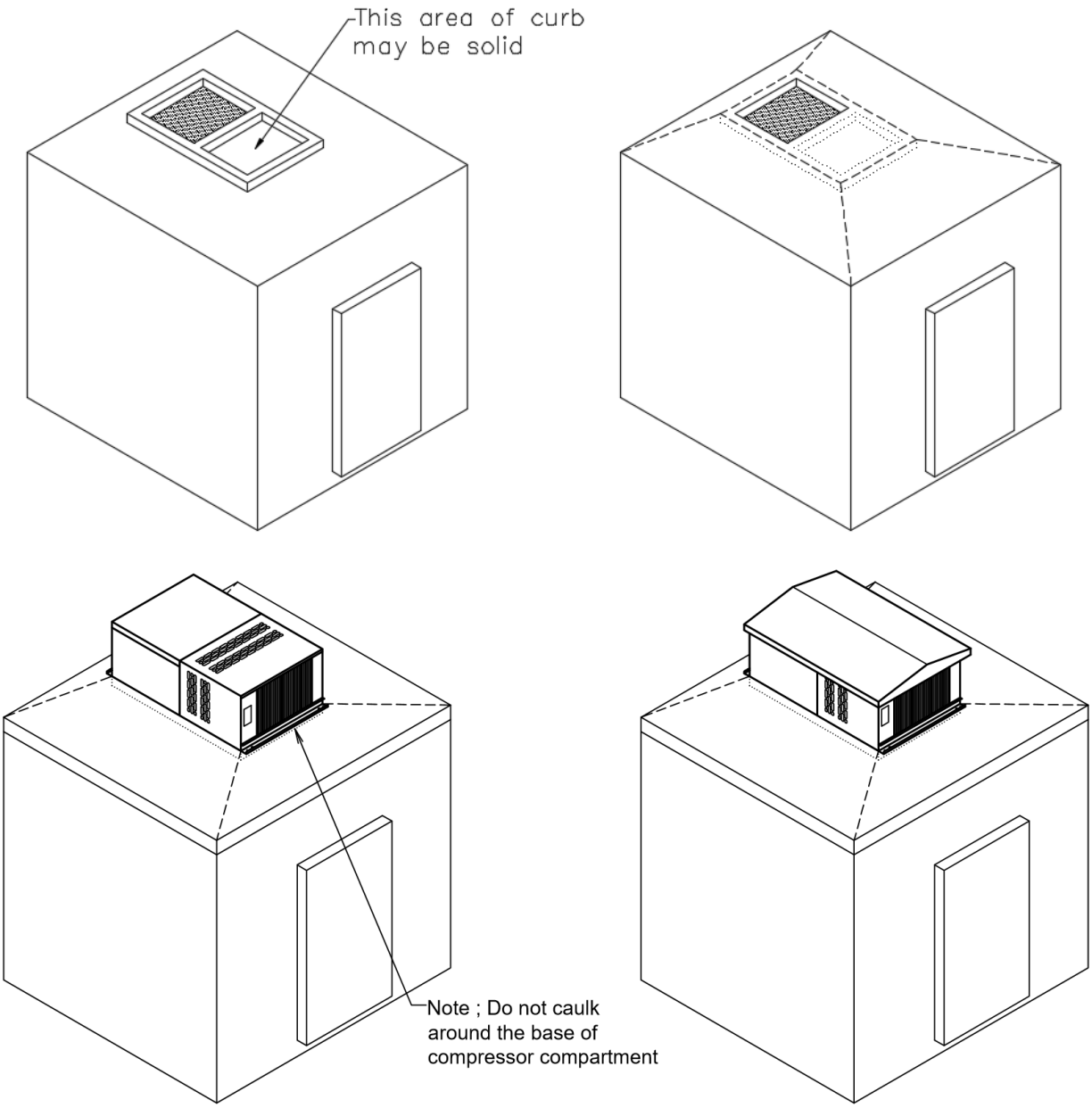

Installation Procedure

General Information

Important: Installation and maintenance should be performed by licensed contractors or technicians who are familiar with local regulations and commercial refrigeration. Please follow the General Safety Information on page 4.

Indoor Application

1. Inspect equipment for any shipping or concealed damages. At final destination before placing the unit on the walk-in box, remove shipping skid.
2. After removing the shipping skid, remove the grill of the unit to prevent damages during mounting. For outdoor application, the outdoor kit (roof&drain) should not be installed prior to rigging and mounting.
3. To locate the placement of the unit, please refer to pages 8-10.
4. A finished opening should be provided to the dimensions shown in cabinet foot print, page 11. Again, make sure to confirm the structural integrity of the box will withstand the weight of the unit with the cutout. Please refer to the Box Manufacturer's instructions for any necessary procedure to be taken for the exposed foam in the walk in panels.
5. Figure 1 (Page 6) can be set in place by hands. Figure 2, 3 and 4 (Page 6-7) have lifting eyes, a spread bar is recommended to prevent stress to the cabinet of the unit.
6. Do not remove or unlock any of the cam locks of the walk in panel for placement of the unit.
7. Top of the walk in should be clean to provide a good sealing surface.
8. When lifting the unit, condenser compartment should not have any parts removed.
9. Before dropping the unit into the cutout made, make sure to place the unit properly with airflow of the unit in mind. (Please refer to Diagram1&2, Page 9-10). Airflow should be towards the door, not directly to the walk in wall.
10. Gently drop the unit into the cut out. Before mounting, the unit needs to leveled, which should be no more than 1/8inch drop per foot or within 1˚. Bolts should be insulated or non conductive to prevent sweating.
11. After mounting, grill can be placed and the trim place should be installed around the inside opening (trim pieces provided with unit). You can also seal the around the trim pieces with silicone. Try not to seal the condenser part of the unit
12. Wire the power cord (if supplied) or hardwire. Make sure to consider any local code or regulations on electrical/wiring. Before powering the unit, make sure to have proper voltage to the unit and phase to the unit. Power should be wired to L1 & L2 of the contactor, not T1 & T2. **Important:** *Do not use extensions cords to power the unit. Do not remove the ground prong as it is required. It is not recommended to use generators to power the unit.*
13. Before powering the unit, check all the wiring in the unit to ensure that there were no wires loosened during transit. Also check any mechanical connections like bolts to make sure none of them are loose.

14. Drain lines are not required as any condensate is evaporated in the condenser drain pan the by liquid line of the condenser.

Outdoor Application

Installation procedure is the same as indoor application except the following.

1. With the use of an outdoor kit, the I QUBE can be easily converted to be used for
2. For outdoor application, the unit must be curb mounted. A roof membrane should be placed over the curb. The curb and membrane helps prevent water or snow from gathering on the roof. The curb also assists with sloping the drain line properly for good drainage.
3. Make sure weather hood and grill are off during rigging and placement of the unit.
4. Before placing the curb, make sure the space between the curb and walk in panel are sealed well. Make sure that water will not gather in the spaces between the curb. It should also be leveled at 1/8inch drop per foot or within 1˚. It is recommended to use low profile bolt heads to secure the curb to the roof panel to prevent contact with the unit.
5. Gently drop the unit in to the curb and mount onto the curbing. Screw heads should be sealed properly to prevent moisture under the roof membrane. Silicone can be used to seal the evaporator section. Please refrain from sealing the condensing unit side.
6. *Important: Before moving on to the next step, please refer to the IQUBE outdoor kit installation guide (page 15-18).*
7. With the outdoor kit installed, make sure the drain line is adequately sloped for proper drainage. A drain line heater will be required for the extension to prevent freezing, where applicable. The drain line in the unit itself is heated.
8. Reinstall weather hood and grill when finished, install trim pieces if necessary.

Important: Do not lift the unit with the weather hood on. IQUBEs, Indoor and outdoor, are not designed for mobile use.

Before Powering the Unit

When installation is complete (placement and wiring), double check all wiring for good connection and for any loose hardware. If any loose wiring or hardware is found, fasten them. Remove the controller cover found on the left side of the condenser coil.

Powering the Unit

Close the circuit breaker. Check if the Carel Controller has power (the display will light up). Make sure the switch is in the on position (I = On, O = Off). If the Carel Controller displays "OFF", hold the power button down on the controller itself to turn the controller on.

IQUBE Outdoor Kit Installation Guide

<u>NOTICE:</u> The Outdoor Kit must be installed on the IQUBE in order for outdoor applications. Drain installation should be done after placing the unit on top of the walk in box.

Outdoor Drain Pipe Installation

1. Remove the top cover of the CDU compartment

2. Remove the side cover of the CDU compartment

3. Using a flat head screwdriver, remove the clamp connecting the copper pipe to the aluminum pipe.

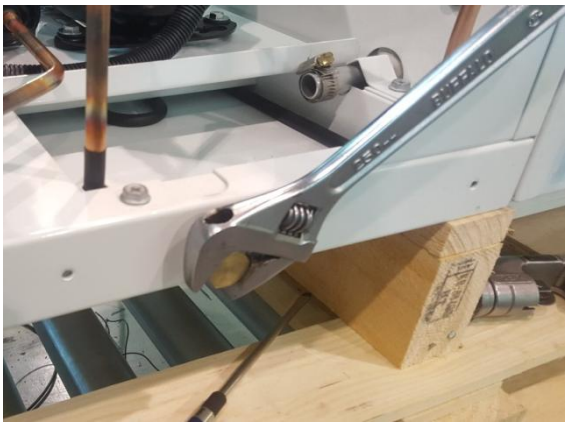

4. Using a adjustable wrench, remove the cap covering the drain outlet.

5. Connect the outdoor drain pipe to the aluminum pipe.

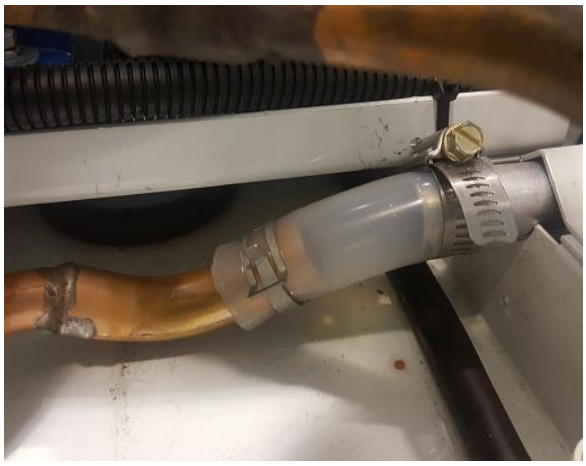

6. Using a flat head screwdriver, fasten the copper and aluminum pipes together.

Outdoor Roof/Cover Installation

Note: Outdoor roof installation should be done after placing the unit on top of the walk in box.

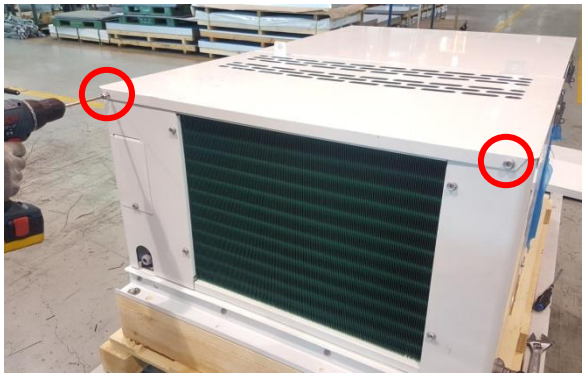

1. Remove the two bolts indicated in the picture above. *Save the bolts you have removed from this step*

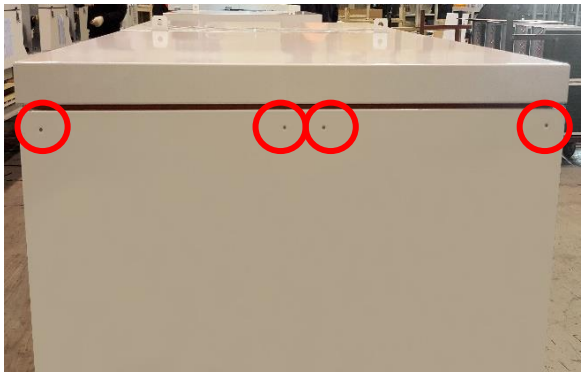

2. Locate the predrilled holes on the outside of the evaporator compartment .

3. Cover the unit with the outdoor roof/cover. Make sure to match the holes on their corresponding sides.

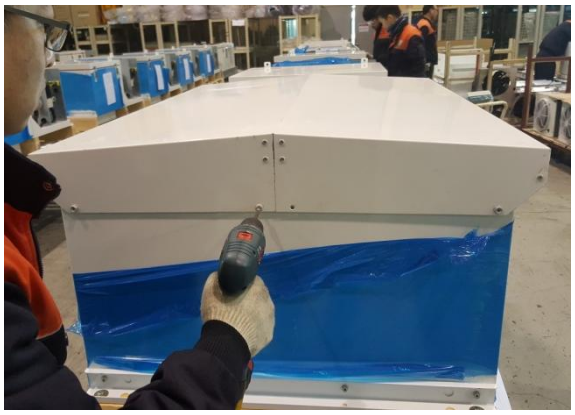

4. After aligning the roof/cover with their corresponding holes, use the bolts provided to fasten the roof/cover.

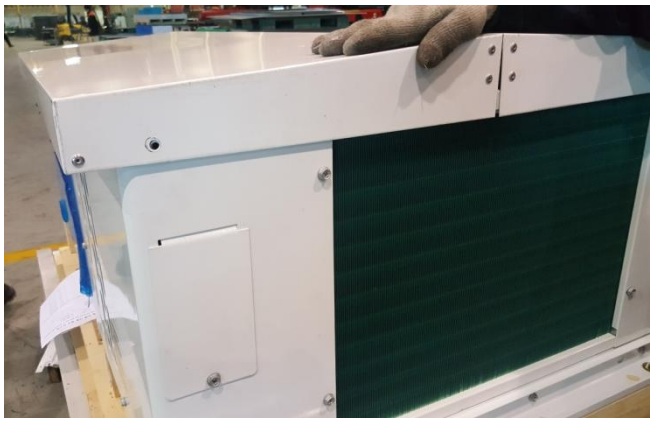

5. Using the same bolts you loosened and saved in step 1, fasten the roof/cover on to the top panel of the condensing unit compartment.

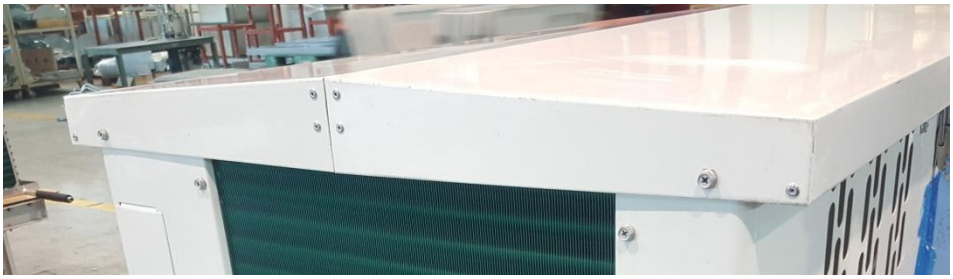

Outdoor Kit Installation Completed

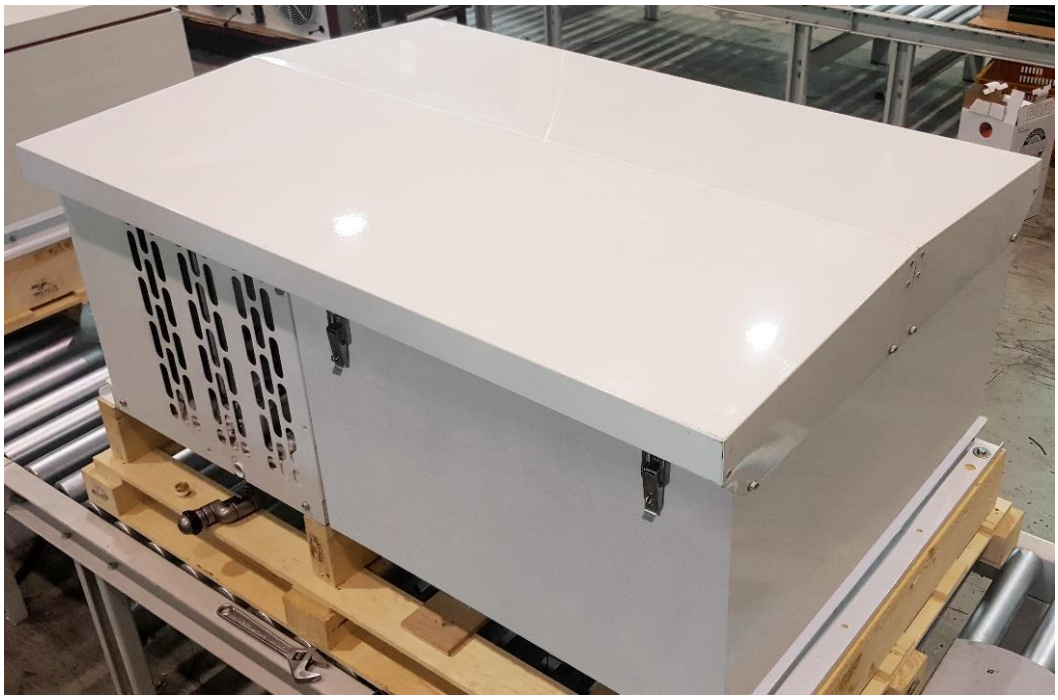

Sequence of Operation

IQUBEs are designed to be controlled with the CAREL (PJEZ) controller. The controller comes preprogrammed for medium to low temp applications. When power is applied to the unit, the controller should automatically be on. The switch underneath the controller must be switched on as the switch controls the compressor circuit. When the unit is powered on, the sequence of operation varies by model (sequence shown below per model).

Table 3. Medium Temp Models | EZY SETTING = 1

Intended for 38˚F application. Air defrost (off cycle defrost). Programmed to have 4 defrost cycles (every 6hours).

Controller Status		Compressor	Condenser Fans	Evaporator Fans	Defrost	Notes
Off	Controller Display alternates from "OFF" and room temperature.	Off	Off	Off	Off	Press and hold the "^" button for 3 seconds. This will turn the controller on.
On	lights are displayed on the left of the controller	Off	Off	On	On	If unit starts in a defrost sequence but there is no ice to be defrosted, press and hold "v" to terminate defrost.
On	lights are displayed on the left of the controller.	On	On	On	Off	Refrigeration Cycle begins, Defrost timer begins (every 6 hours). Unit cools until desired temperature is reached.
On	Controller displays desired temperature(around 38˚F).	Off	Off	On	Off	Evap. fans are on at all times.
On	Box temperature rises above 40˚F.	On	On	On	Off	There is a 2˚F differential. Compressor is off for a minimum of 4 minutes.
On	Defrost cycle is initiated after 6 hours or manually.	Off	Off	On	On	Air defrost sequence initiated every 6 hours. Setting can be changed (refer to controller setting)
On	Defrost sequence terminates after 40mins or when room temperature reaches 40˚F and are displayed	On	On	On	Off	Refrigeration cycle starts over after defrost cycle.

Power is provided to the controller, compressor and fan motors. When powered on and the controller calls for cooling, the controller closes and energizes the compressors contactor coils. This will start the compressor and all fan motors. When the desired boxed temperature is reached, the controller opens and de-energizes the

compressors contactor. Evaporator fan motors will be running at all times. When box temperature rises to 40˚F and minimum compressor off time has expired, the controller will re-energize the compressor contactor. Cycles begins again.

Table 4. Low Temperature Models | EZY SETTING = 2

Intended for -10˚F - 0˚F application. Electric defrost. Programmed to have 4 defrost cycles (every 6 hours).

Controller Status		Compressor	Condenser Fans	Evaporator Fans	Defrost	Notes
Off	Controller Display alternates from "OFF" and room temperature.	Off	Off	Off	Off	Press and hold the "^" button for 3 seconds. This will turn the controller on.
On	lights are displayed on the left of the controller. Automatic defrost initiated.	Off	Off	Off	On	If unit starts in a defrost sequence but there is no ice to be defrosted, press and hold "v" to terminate defrost.
On	Defrost is terminated after 60mins or after the defrost sensor reaches above 65˚F	Off	Off	Off	Off	Could be manually terminated.
On	lights are displayed on the left of the controller. Cooling cycle is initiated	Off	Off	Off	Off	Refrigeration cycle begins, defrost timer begins (every 6 hours). 2 minute drip time is initiated
On	2 minute drip time expires.	On	On	Off	Off	Compressor and condenser fan motor starts. Evaporator motors delayed for 2 minute to freeze coil.
On	Evaporator fan motors start	On	On	On	Off	Fan delay 2 mins.
On	Controller displays desired temperature(around -10˚F-0˚F, depends on setting temperature).	Off	Off	On	Off	
On	Box temperature rises above -8˚F - 2˚F. (depends on desired temperature setting	On	On	On	Off	There is a 2˚F differential. Compressor is off for a minimum of 4mins.
On	Defrost cycle is initiated after 6 hours or	Off	Off	Off	On	Electric defrost initiated.

	manually.					
On	Defrost sequence terminates after 60mins or when coil temperature reaches 65˚F and ⊖ ✠ are displayed	On	On	Off	Off	Refrigeration cycle starts over after defrost cycle. 2 min drip time begins.
On	Evaporator fan motors start	On	On	On	Off	Fan delay for 2mins.

Under normal operation, defrost sequence will be initiated after 6hour (or different) has passed. During defrost, the controller will de-energize the compressor and fan motors while energizing the defrost heaters. There is a heater relay in all controllers. When defrost sequence has completed itself (either by preset coil temperature or duration), the defrost heaters de-energize and drip time/fan delay sequence begins. During this sequence, the compressor and condenser fan motor will be energized. After drip time and fan delay has been satisfied, the evaporator fan motors will kick in. The evaporator fan motor may be delayed more than 2mins if the coil temperature is above 35˚F. Refrigeration cycle resumes.

Controller Operation

PJEZ Carel Controller

IQUBE units are controlled by the CAREL (PJEZ) controller. CAREL (PJEZ) controller can be fully configured for electronic refrigeration systems. The controller comes factory set and does not need to be changed, unless needed.

Installation and Removal of Controller

Installing the controller from the front using screws

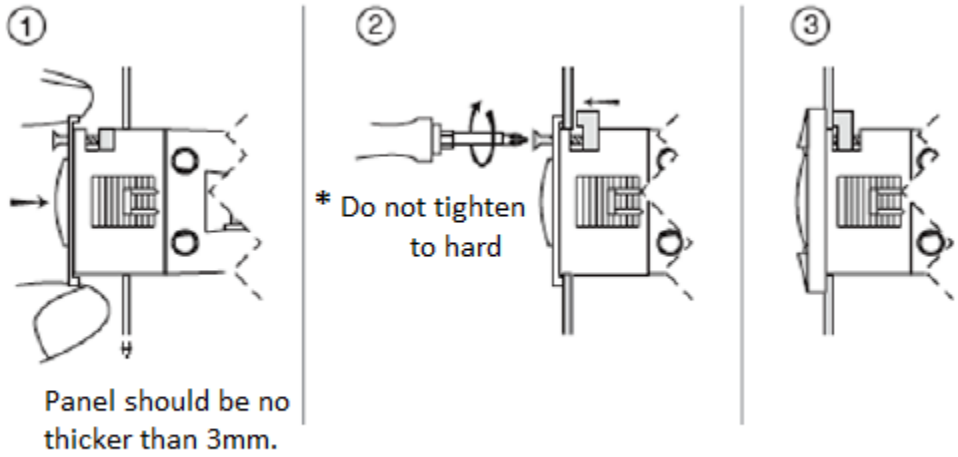

1. Remove front frame of the controller and double check for catch placement. Place controller into the slot. Unscrew the top screw a little bit. This screw must never fall off the face of the controller.
2. While holding the controller in place, use a screw driver to tighten until you hear the catch "click". If you do not hear the "click" sound, unscrew again and rescrew. Make sure not to tighten the screw so hard.

3. When mounted properly, replace the front panel of the controller.

Installing the controller by using rear brackets

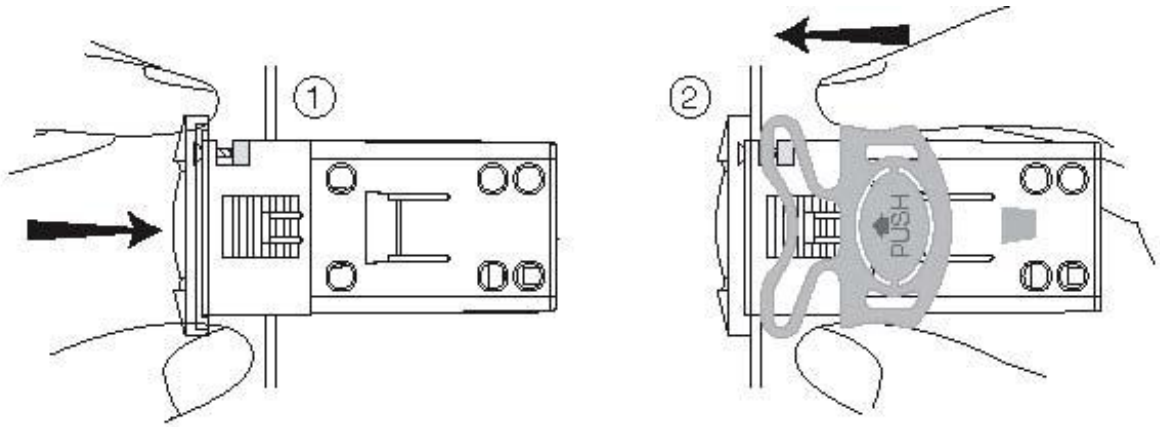

1. Insert the controller to the controller slot.
2. Secure the controller by sliding the brackets in the guide of the side of the controllers. Make sure direction of the bracket is like above. The bracket will be difficult to take out if they were inserted backwards. Slide the brackets in all the way to secure the controller.

General Safety of Electrical Connections

<u>WARNINGS:</u>

Electrical connections must only be completed by a licensed electrician.

Power supply that is different from specified may cause serious damage to the system. As much as possible, separate the probes and digital input signal cables from the cables carrying inductive loads and power cables to avoid possible electromagnetic disturbance. Never lay power cables (including the electrical cables) and probe signal cables in the same conduit. Do not install the probe cables in the immediate vicinity of power devices (circuit breakers, contactors and etc). Reduce the path of the probe and sensor cables as much as possible, and avoid spiral paths that enclose power devices. The probes must be connected using shielded cables (minimum cross section of each wire should be 0.5mm^2).

Avoid direct contact with internal electrical components.

Connection errors (and connections other than those indicated in this manual) may involve danger to the safety of users and cause faults on the controller and components connected.

Fit the unit will all the electromechanical safety devices required to guarantee correct operation and the complete safety of the user.

Display

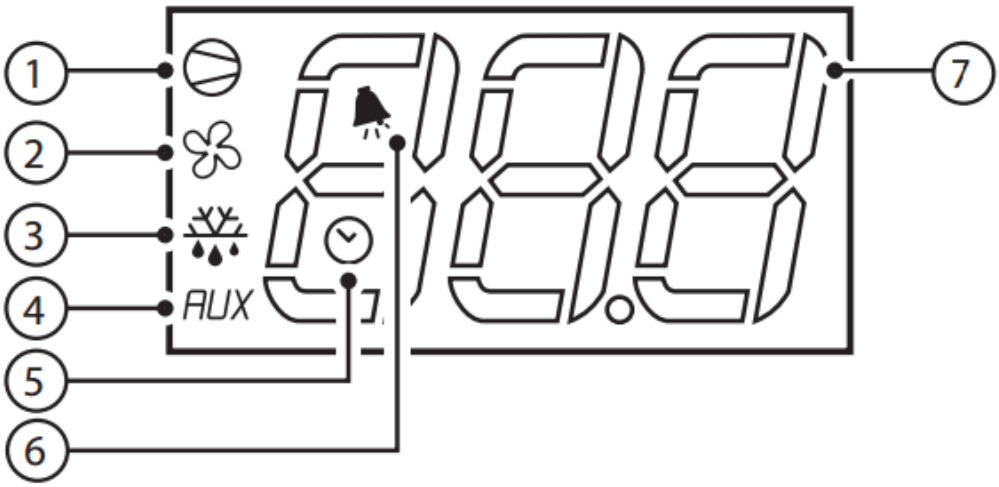

Button	Function	Normal Operation			Start Up
		On (solid)	Off	Flashing	
1	Compressor	On	Off	Calling	On
2	Fan	On	Off	Calling	On
3	Defrost	On	Off	Calling	On
4	AUX	Acitve Output	Non-Active Output	-	On
5	Clock	RTC available tEN=1 and at least one time band has been set.	RTC not available tEN=0 and no time band has been set		On)if tEN=1
6	Alarm	Alarm in progess	No alarm		On
7	Digits	3 Digits with decimal point and range of -199 - 999. Values in C˚or F˚ (See parametes /4, /5, /6 for type of probe displayed).			

Keypads

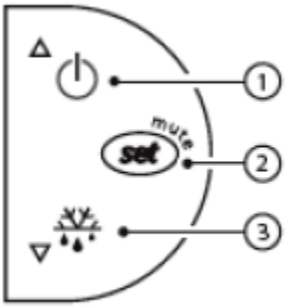

Button	Normal Operation		Start Up	
	Pressed alone	Pressed together with		
1	Press and hold for more than 3 seconds to power on/off. Up button (navigation)	Pressed together with 3 activates/deactivates the continuous cycle.	-	
2	Prese and hold for 1 second to change set point. Press and hold for 3 or more seconds to access EZY settings. Enter "22" as password for PS parameter to acess full settings. -Press button briefly to mute alarm.	-	For 1 second RESET current EZY set	Pressed together with (2 and 3) for more than 3 seconds will reset the parameters
3	Press and hold for more than 3 seconds to activate or deactivate defrost. Down button (navigation) Press and hold set after	Pressed together with 1 activates/deactivates the continuous cycle.	Displays firmware version if pressed for 1 second.	

	changing a paramet to save parameters permanantly.			

Typical Controller Wiring (refer to wiring diagrams on page x - x for more details)

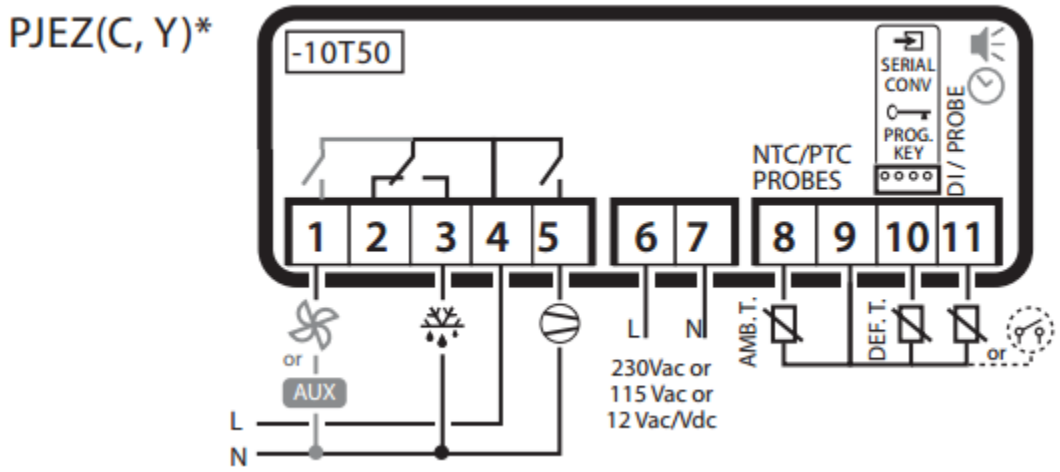

Preliminary Configurations

Once the electrical connections have been completed, simply power up the controller to make it operative.

Infinity Refrigeration recommends that the following parameters be checked at power up. Also check if the controller displays any alarm signals and fix accordingly.

Control Parameters		Defrost Parameters		Alarm Parameters	
st	Set Point	d0	Type of Defrost	Ad	Temperature Alarm Delay
rd	Set Point Differential	dI	Interval Between Defrost	AL	Low Temperature Threshold/Deviation
		dt	End Defrost Temperature	AH	High Temperature Threshold/Deviation
		dP	Maximum Defrost Duration		

Functions available from the keypad

On and Off

Switching the instrument ON : press UP for more than 3 s (when pressing the button, the display shows ON).

Switching the Instrument OFF : press UP for more than 3 s. The display shows the message "OFF", alternating with the temperature measured by the set probe.

In OFF status, the following functions are disabled (if featured by the model):

- Compressor control / duty setting / continuous cycle;
- Defrost;
- Fan control;
- Alarms : 'LO', 'HI', 'IA', 'cht', 'CHT';
- Door switch: A4=7/8
- Buzzer (when available).

While the following are enabled:

- Temperature display, alternating with the message "OFF";
- Parameter display and setting;
- Alarms: "E0", "E1", "E2";
- The internal timer relating to parameter 'dI' is updated. If 'dI' expires in OFF status, a defrost is performed when restarting;
- Auxiliary relay management, only in the following configurations:
    - H1= = 1/2 ("E0" alarm only);
    - H1= 3, A4= 6;

WARNINGS:

When first connected, easy is already on and ready to be used; the instrument can be switched on from a supervisor PC and via an external contact (setting A4 = 5). The latter has priority over the other modes.

Set Point Setting (desired temperature value)

The easy, easy compact devices control the desired temperature (set point) inside the cabinet or cold room directly and dynamically.

To view and modify the set point:

- press SET for 1 s, the set value will start flashing;
- increase or decrease the value using UP or DOWN;
- press SET to confirm the new value.

Manual Defrost

Press DOWN for more than 3 s (activated only if the temperature parameters are satisfied).

Continuous Cycle

Press UP+DOWN for more than 3 s (activated only if the temperature conditions are right and for easy split only when H6=0).

The continuous cycle is used to maintain refrigeration active in the cabinet or cold room, regardless of the temperature inside the unit. This may be useful for rapidly bringing the temperature below the set point value.

Rapid Display of the Temperature Read by the Other Probes

Press the DOWN button to scroll the temperatures read by the probes. Each time the DOWN button is pressed, the display will show the name of the probe Pr1, Pr2 or Pr3 (only on the models with 3 inputs and with multifunction input configured as a probe) and after 1 s the temperature measured by the selected probe will be displayed.

To display the other probes, press DOWN again.

To return to the normal display, wait 3 s without pressing any buttons (exit by timeout).

Saving New Parameter Values

<u>Important:</u> To save any changes to the parameter, you have to press and hold the set button(keypad button 2 above, set mute). If you do not save it, your changes to the parameter will be lost.

Controller Setting and Parameters

Rapid Parameter Set Selection (EZY Settings)

The easy controller features the EZY parameter which is used to quickly review a list of parameters, with corresponding values, for the control of the refrigeration system.

Medium Temp Models | EZY SETTING = 1

Intended for 38˚F application. Air defrost (off cycle defrost). Programmed to have 4 defrost cycles (every 6hours).

Parameter	Description	Min.	Max.	Factory Default
st	Set Point	0	50	38
r1	Minimum Set Point Value	-50	50	35
r2	Maximum Set Point Value	0	150	50
c2	Minimum Compressor Off Time	0	100	2
d0	Type of Defrost	0	4	4
dl	Interval Between Defrost	0	199	6
dt	End Defrost Temperature Set Point	-50	127	40
dP	Maximum Defrost Duration ALARM_ED	1	199	40
d4	Defrost on Power Up	0	1	0
dd	Dripping Time	0	15	0
f0	Enable Evaporator Fan Control	0	1	0
f2	Stop Evaporator During Defrost	0	1	0
f3	Evaporator Fan Status During Defrost	0	1	0
fd	Post-Dripping Time	0	15	0

Low Temp Models | EZY SETTING = 2

Intended for -10˚F - 0˚F application. Electric defrost. Programmed to have 4 defrost cycles (every 6 hours).

Parameter	Description	Min.	Max.	Factory Default
st	Set Point	-30	30	-10
r1	Minimum Set Point Value	-50	303	-30
r2	Maximum Set Point Value	-30	150	30
c2	Minimum Compressor Off Time	0	100	2

d0	Type of Defrost	0	4	4
dI	Interval Between Defrost	0	199	6
dt	End Defrost Temperature Set Point	-50	127	65
dP	Maximum Defrost Duration ALARM_ED	1	199	40
d4	Defrost on Power Up	0	1	0
dd	Dripping Time	0	15	4
f0	Enable Evaporator Fan Control	0	1	1
f2	Stop Evaporator During Defrost	0	1	0
f3	Evaporator Fan Status During Defrost	0	1	1
fd	Post-Dripping Time	0	15	2

Tables of Alarms and Signals

When something on the unit is malfunctioning, the controller will set of an alarm buzzer to notify that an alarm has been tripped. Pressing the set button will mute the alarm temporarily. However, muting the alarm will not resolve the issue until the cause of the alarm has been resolved. When the alarm is tripped, the light will be on. An alarm code will be alternating with the display temperature. All alarms have automatic reset, given that the cause of the alarm has been resolved, the alarm will reset on its own. However, alarm "CHt" will need to be manually reset. To reset the CHt alarm, simply turn off the controller by pressing the "^" button and holding for 3 seconds. Turning on the controller again will reset the CHt alarm.

Table 4. Alarm Codes

Alarm Code	Buzzer and Alarm Relay	LED	Description	Reset?	Parameters Involved with Alarm Cause
E0	active	on	probe 1 error = control	automatic	
E1	not active	on	probe 1 error = defrost	automatic	d0=0/1/4, F0=1
E2	not active	on	probe 1 error = condenser/product	automatic	A4=10
IA	active	on	external alarm	automatic	A4=1, +A7
dOr	active	on	open door alarm	automatic	A4=7/8, +A7
LO	active	on	low temperature alarm	automatic	AL, Ad

HI	active	on	high temperature alarm	automatic	AH, Ad
EE	not active	on	unit parameter error	not possible	
EF	not active	on	operating parameter error	manual	
Ed	not active	on	defrost running	on first defrost ended correctly	dP, dt, d4, A8
dF	not active	off	defrost running	automatic	d6=0
cht	not active	on	dirty condenser pre-alarm	automatic	A4=10
CHT	active	on	dirty condenser alarm	manual	A4=10
EtC	not active	on	clock alarm	by setting the time	if bands active

Detailed Description of Alarm

LED flashing

The activation of the corresponding function is delayed by a timer, awaiting an external signal or disabled by another procedure that is already in progress. e.g. if is a continuous cycle in progress and a defrost is called, the latter will remain pending until the end of the continuous cycle, and the corresponding LED (defrost) will flash.

E0 steady or flashing

Control probe error:

- Probe not working : the probe signal is interrupted or short-circuited;
- Probe not compatible with the instrument;

The alarm signal E0 is steady if it is the only active alarm (the temperature value is not displayed), while it flashes if other alarms are active or the second probe is displayed.

E1 flashing

Evaporator probe or food conservation probe error:

- Probe not working, the probe signal is interrupted or short-circuited;
- Probe not compatible with the instrument;

E2 flashing

Condenser probe or food conservation probe error:

- Probe not working, the probe signal is interrupted or short-circuited;

- Probe not compatible with the instrument;

IA flashing

Immediate or delayed alarm from multifunction digital input:

- Check the multifunction input and parameters A4 and A7.

dOr flashing

Open door alarm:

- Check the multifunction input and parameters A4 and A7.

LO flashing

Low temperature alarm. The probe has measured a temperature lower than the set point by a value that exceeds parameter AL:

- check parameters AL, Ad and A0.

The alarm is automatically reset when the temperature returns within the set limits (see parameter AL).

HI flashing

High temperature alarm. The probe has measured a temperature higher than the set point by a value that exceeds parameter AH.

- Check parameters AH, Ad and A0.

The alarm is automatically reset when the temperature returns within the set limits (see parameter AH).

EE displayed during operation or on power-up

Unit parameter reading error. See Data errors.

EF displayed during operation or on power-up

Operating parameter reading error. See Data errors.

Ed flashing

The last defrost ended after exceeding the maximum duration rather than when reaching the end defrost set point.

• check parameters dt, dP and d4;

• check the efficiency of the defrost.

The message disappears when the next defrost ends correctly.

dF flashing

Defrost running:

- This is not an alarm signal, but rather a message that the instrument is running a defrost. Only shown if d6= 0.

CHt flashing

Dirty condenser alarm:

- Check parameters A4, Ac, AE and Acd.

EtC flashing

Internal clock error.

Data error

In certain operating conditions, the instrument may detect errors in the data saved. These errors may compromise the correct operation of the instrument. If the microprocessor detects a data saving error, the display shows the message “EE”.

If the fault persists, the controller needs to be replaced. If, on the other hand, the message disappears, it can continue to be used. When “EE” error occurs frequently and/or remains for some time, the controller should be checked, as the original precision may not be guaranteed.

Controller Settings and Parameters

Parameter navigation

The operating parameters, modifiable using the keypad, are divided into two types: frequent (type F) and configuration (type C). Access to the latter is protected by password (default= 22) to prevent accidental or unauthorized modifications.

Accessing the type F parameters:

- Press the SET button for more than 3 s (if there are active alarms, mute the buzzer). The display shows the parameter code 'PS' (password);
- Use the UP and DOWN buttons to scroll the parameters. The LED corresponding to the category of parameters will be on (see Table 8);
- Press SET to display the value associated with the parameter
- Increase or decrease the value using the UP or DOWN button respectively;
- Press SET to temporarily save the new value and display the parameter again;
- Repeat the procedure for any other parameters that need to be modified;
- Press the SET button for more than 3 s to permanently save the parameters and exit the parameter setting procedure.

Accessing the type C parameters:

- Press the SET button for more than 3 s (if there are active alarms, mute the buzzer), the display shows the parameter code "PS" (password);
- Press the SET button to access the password setting;
- Use the UP and DOWN buttons to scroll the numbers until displaying "22" (password to access the parameters);
- Press the SET button to confirm the password;
- Use the UP and DOWN buttons to scroll the parameters. The LED corresponding to the category of parameters will be on (see Table 8);
- Press SET to display the value associated with the parameter;
- Increase or decrease the value using the UP or DOWN button respectively;
- Press SET to temporarily save the new value and display the parameter again;
- Repeat the procedure for any other parameters that need to be modified;
- Press the SET button for more than 3 s to permanently save the parameters and exit the parameter setting procedure.

WARNING:

If no button is pressed for 60's, all the changes made to the parameters, temporarily saved in the RAM, will be cancelled and the previous settings restored.
The dAY, hr, Min parameters are not restored, as these are saved instantly when entered.
If power is disconnected from the instrument before saving the settings (pressing the SET button for 3 s), all the changes made to the parameters and temporarily saved will be lost.

Table 5. Category of parameters.

Category	Initial	Icon
Probe parameters	/	-
Control parameters	r	-
Compressor parameters	c	
Defrost parameters	d	

Category	Initial	Icon
Alarm parameters	A	
Fan parameters	F	
AUX output configuration parameters	H1	AUX
RTC parameters	-	

Reset to Default Parameters

WARNING:

- *Running this procedure overwrites any custom parameter settings.*
- To reset the default parameters:
- Disconnect power from the instrument;
- Reconnect power while holding the SET and DOWN buttons;
- The display will show the message “CF”;
- After a few seconds the instrument starts operating with the default configuration. Any different parameter settings will need to be updated.

List of Controller Parameters

Codes	Description	Type	Min	Max	UOM	Defaults	
						Low temp.	Med temp.
PS	password	F	00	+199	-	22	22
/	**PROBE PARAMETERS**						
/2	probe measurement stability	C	1	15	-	4	4
/4	select probe displayed	F	1	3		1	1
/5	select ℃/°F (0=℃, 1=°F)	C	0	1	flag	1	1
/6	disable decimal point	C	0	1	flag	0	0
/7	enable probe 2 alarm (model M only)	C	0	1	0	0	0
/C1	probe 1 calibration	F	-50	+50	°F	0	0
/C2	probe 2 calibration	F	-50	+50	°F	0	0
/C3	probe 3 calibration	F	-50	+50	°F	0	0
r	**CONTROL PARAMETERS**						
St	control temperature set point	S	r1	r2	°F	-10	38
r1	minimum set point value	C	-50	r2	°F	-30	35
r2	maximum set point value	C	r1	150	°F	30	50
r3	select operating mode (0=direct+defrost , 1=direct , 2=reverse)	C	0	2	flag	0	0
r4	automatic night-time set point variation	C	-50	+50	°F	0	0
rd	control differential	F	0	19	°F	2	2
c	**COMPRESSOR PARAMETERS**						
c0	compressor and fan start delay on power-up	C	0	100	min	2	2
c1	minimum time between consecutive compressor starts	C	0	100	min	2	2

c2	minimum compressor off time	C	0	100	min	2	2
c3	minimum compressor on time	C	0	100	min	2	2
c4	compressor on time with duty setting	C	0	100	min	0	0
cc	continuous cycle duration	C	0	15	hours	0	0
c6	temperature alarm bypass after continuous cycle	C	0	15	hours	2	2
d	**DEFROST PARAMETERS**						
d0	type of defrost (0 = heater by probe, 1 = hot gas by probe, 2 = heater by time, 3 = hot gas by time, 4 = heater by time with temp. control)	C	0	4	flag	0	0
dI	interval between defrosts	F	0	199	hours	6	6
dt	end defrost temperature set point	F	-50	+130	°F	65	40
dP	maximum defrost duration	F	1	199	min	40	40
d4	defrost when the instrument is switched on (0=no, 1=yes)	C	0	1	flag	0	0
d5	defrost delay on power-up or when enabled by digital input	C	0	199	min	0	0
d6	disable temperature display during defrost (0=no, 1=yes)	C	0	1	flag	0	0
dd	dripping time	F	0	15	min	4	0
d8	alarm bypass time after defrost	F	0	15	hours	1	1
d9	defrost priority over compressor protectors (0=no, 1=yes)	C	0	1	flag	0	0
d/	display defrost probe temperature	F			°F		
dC	time base (for defrost only : 0 = hr/min , 1 = min/s)	C	0	1	flag	0	0
A	**ALARM PARAMETERS**						

A0	alarm and fan temperature diff erential	C	-20	+20	°F	0	0
AL	low temperature alarm threshold/deviation (AL= 0 : alarm disabled)	F	-50	+250	°F	-20	35
AH	high temperature alarm threshold/deviation (AH= 0 : alarm disabled)	F	-50	+250	°F	30	50
Ad	low and high temperature alarm delay	C	0	199	min	0	5
A4	digital input configuration 0 : input not active 1 : exter. alarm, instant (A7=0) or delayed (A7>0) 2 : enable defrost (open=disabled) 3 : start defrost on closing 4 : curtain switch or night-time operation (open=normal set point) 5 : remote ON/OFF (open=OFF) 6 : AUX output control [H1=3] (open=AUX de-energised) 7 : AUX output [H1=3]+FAN OFF control (closed)(open=AUX energised) 8 : AUX output [H1=3]+FAN OFF control (closed) + COMP. OFF control (closed) (open=AUX energised) 9 : select direct/reverse operation r3=0 → open=direct + defrost, closed=reverse r3=1/2 → open=direct, closed=reverse 10 : condenser probe 11 : product probe	C	0	11	-	5	5
A7	external alarm detection delay	C	0	199	Min	0	0
A8	enable alarm ”Ed” : end defrost by timeout (1 = enabled)	C	0	1	-	0	0
Ac	high condenser temperature alarm	C	-50	+250	°F	150	150

AE	high condenser temperature alarm differential	C	0.1	20.0	°F	5	10
Acd	high condenser temperature alarm delay	C	0	250	min	0	0
F	**FAN PARAMETERS**						
F0	fan management (0 = fans on, 1 = controlled based on parameter F1)	C	0	1	-	1	0
F1	evaporator fan control set point	F	-50	+130	℃/°F	32	5
F2	fans OFF when compressor OFF (0=ON , 1=OFF)	C	0	1	-	0	0
F3	evaporator fan status during defrost (0: FAN ON, 1: FAN OFF)	C	0	1	-	1	0
Fd	post-dripping time	F	0	+15	min	2	0
H	**OTHER SETTING**						
H0	serial address	C	0	199	-	1	1
H1	AUX output confi guration 0 : no function associated with the output 1 : alarm output usually energized 2 : alarm output usually de-energized 3 : auxiliary output driven by digital input [A4=6/7/8] digital input OPEN = AUX de-energised digital input CLOSED = AUX energised	C	0	1	flag	1	1
H2	enable keypad (0=disabled, 1=enabled, 2=enabled except for ON/OFF)	C	0	2	flag	1	1
H4	disable buzzer (0=enabled, 1=disabled)	C	0	1	-		
H5	key ID code from supervisor	F	-99	+99	-		
EZY	select Easy Set according to the model	C	0	4	-	2	1

Service

General System Troubleshooting Guide

Compressor will not run/start

- Main switch open. Check power to unit
  - Close switch or apply power
- Blown Fuse
  - Before replacing the fuse, diagnose the system for overloading. check for any shortages or grounds in the electrical circuit
- Check for any loose wires
  - Check all wire connections and secure/tighten connections if any are found loose.
- Check contactor or contactor coil
  - Replace the contatctor
- Check safety switches
  - Replace if switch is defective
- Thermal overload switch
  - Overload switches will automatically reset. Diagnose for problems after the switch automatically resets.
- Check for motor electrical issues
  - Check for locked rotors, grounds, shortages or burn outs.
- System does not require cooling
  - Wait until system to call for cooling

Compressor is noisy

- Wrong/reversed Phasing (Only 3 Phase)
  - Fix Phasing
- Crankcase flooded with refrigerant
  - Check the TXV
- Defective or worn compressor.
  - Replace the compressor

High Discharge/ Liquid Pressure

- Check the condenser fan motor
  - Test the electrical circuit. Replace motor if defective
- Condenser coil possibly dirty
  - Clean the condenser coil
- System is overcharged (refrigerant)
  - Reclaim and recharge proper amount of refrigerant
- Non condensables
  - Filter out non condensables.

Low Discharge/ Liquid Pressure

- System is low on refrigerant
  - Check for leaks in the system before adding refrigerant charge. Repair any leaks found
- Low Suction pressure
  - Check below for solutions to low suction pressure

High Suction Pressure

- Undersized equipment or excessive load
  - Add equipment or reduce load
- Expansion valve is overfeeding
  - Check location of remote bulb and regulate superheat

Low Suction Pressure

- Low on Refrigerant Charge
  - Check for leaks in the system before adding refrigerant charge. Repair any leaks found
- Expansion valve malfunction
  - Adjust for proper superheat or replace if defective
- Condensing temperature is too low
  - Check for function of fan cycle switches.
    - Refer to Low Discharge/Liquid Pressure for further assesment
- Non condensables
  - Filter out non condensables.

Fans are not running

- Defective fan motor
  - Replace fan motor
- Fan cycle switch (Condenser Fan Motor)
  - If ambient temperature below 50˚F, condenser fan cycles
- System is in defrost (Except for Air Defrost)
- Evaporator Coil is not cold enough to start (Electric Defrost)
  - Check controller fan delay settings
- Check if power is applied to T1 and T2 of the contactor
  - If power is applied to T1 and T2 of the contactor, remove and re-apply to L1 and L2 of the contactor
  - If main switch is open, close it
  - If fuse is blown, replace fuse. Before replacing fuse, check for shortages or overloading

Compressor Thermal Overload Tripped

- System Operating Outside Designed Conditions
  - Add equipment to recover design conditions
- System Overcharged
  - Reclaim some refrigerant to adjust to proper amount
- Condenser coil dirty
  - Clean coils

Room Temperature is too high

- Evaporator fan motor not running
  - Check electrical circuit. Replace fan motor if defective
- Evaporator coil dirty or iced up
  - Clean coils or defrost manually
- System low on refrigerant charge
  - Check for leaks in the system before adding refrigerant charge. Repair any leaks found
- Thermostat set too high
  - Adjust thermostat

Evaporator coil will not clear after defrost cycle

- Defective defrost controller
  - Replace defrost controller
- Not enough defrost cycles or short defrost duration
  - Adjust defrost duration or adjust controller for additional defrost cycles
- Defrost sensor defective or loose
  - Secure sensor if loose or replace if defective (open windings)

Frost forms on the ceilings around the vent and one the grille

- Too many defrost cycles or defrost duration is too long
  - Adjust defrost duration or adjust controller for additional defrost cycles
- Fan delay fails to delay fans after defrost cycle
  - Adjust fan delay setting in the controller or replace coil sensor if defective.
- Defrost sensor defective or loose
  - Secure coil sensor if loose or replace if defective (open windings)

Evaporator Drain Pan is Accumulating Ice

- Defective drain heater
  - Replace defrost controller
- Drain pipe is clogged
  - Adjust defrost duration or adjust controller for additional defrost cycles
- Defective defrost controller
  - Secure sensor if loose or replace if defective (open windings)
- Unit is not leveled properly
  - Refer to installation guide for proper leveling. Adjust level according to guide

IQUBE DRAIN PIPE MAINTENANCE GUIDE

Notice: Drain maintenance should be done every 3 months to prevent water leaks in the walk-in box.

Please note: Water leaks caused by poor maintenance of the drain is not covered by our 1 year labor warranty. It is the customers duty to maintain the drain pipe of the unit.

What you will need:

---

1. Test tube cleaning brush or a pipe brush (at least 12inches in minimum length and should be flexible)
   Can be obtained at any local supply hardware store (IE; Home Depot or Wal-Mart).

2. Disposable compressed air cans are just as effective in de clogging the drain pipe.
3. Cup of hot water or jug of hot water, if the evaporator drain pan is frozen.
4. Phillips screw driver or 8mm socket wrench.
5. Gloves are recommended as there are potentially dangerous sharp objects.

Please note: Before you begin, please disconnect the breaker to your unit to ensure there is no risk of electrical shocks. Also, give it about 5-10 mins before you begin your maintenance in case the unit was in defrost and the heaters are hot.

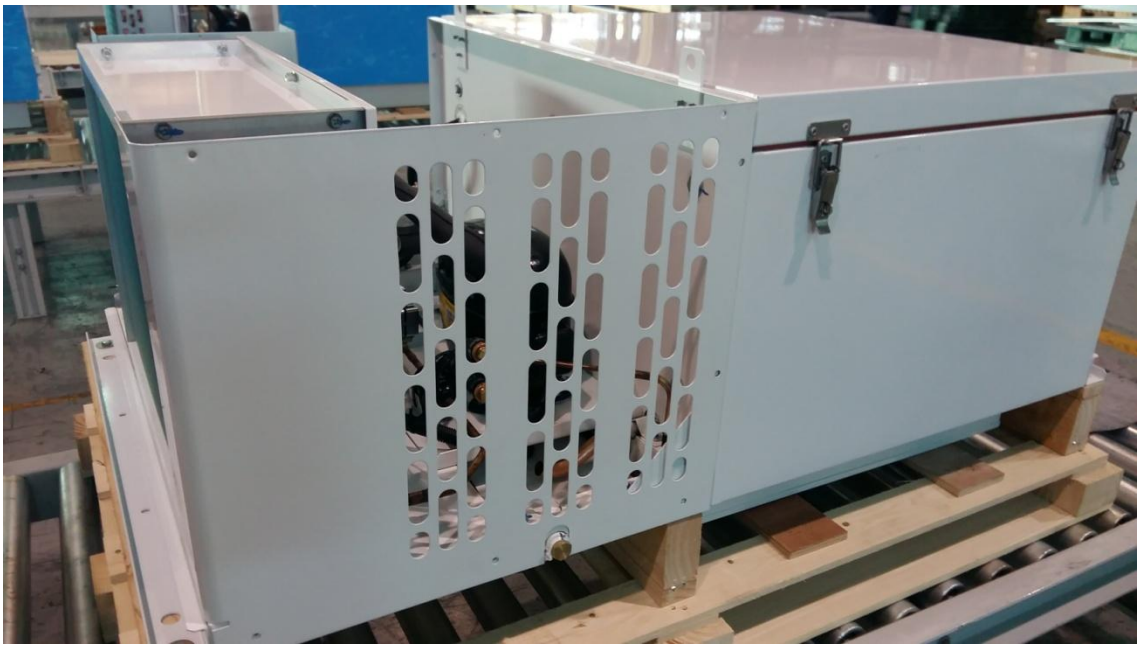

After waiting 5-10 minutes, proceed to step 1.

Step 1: Undo the top cover of the condensing unit. A Phillips screw driver can be used but we recommend to the use of an 8mm socket wrench or an 8mm socket with a drill.

Step 2: Undo the side panels. Remember to give the unit about 5-10 mins before opening the side panels. (The drain line heater may be hot!!!)

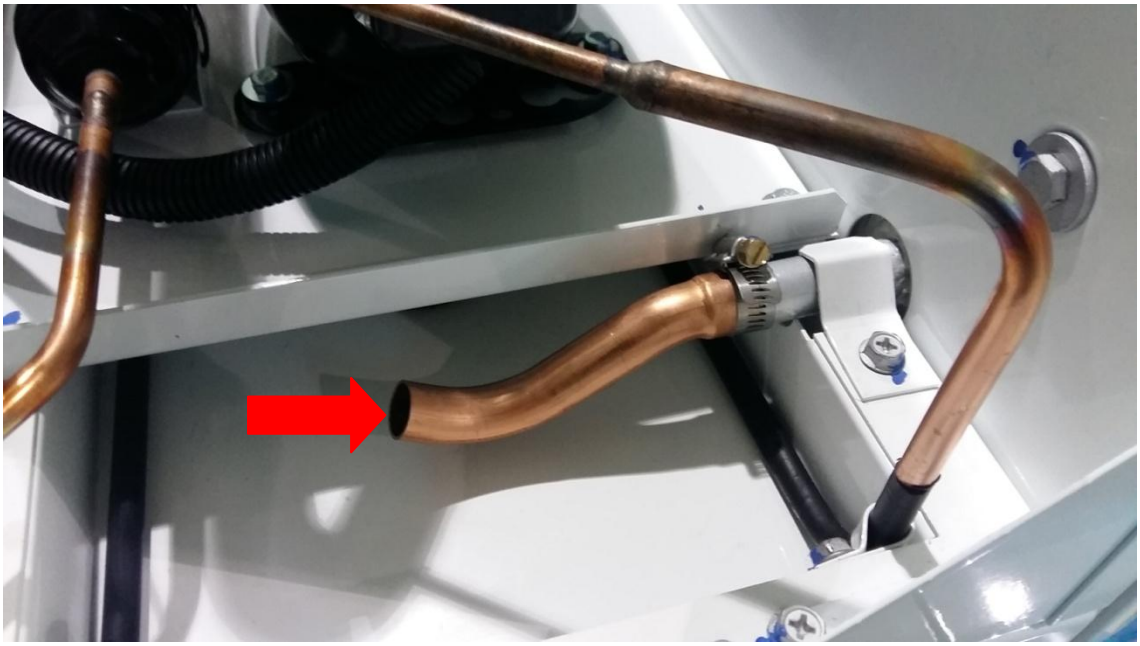

Step 3: Pipe cleaning brush: Insert the pipe cleaning brush through the pipe as seen above. Make sure the pipe cleaning brush is inserted enough to clear the full drain pipe length (about one foot). To ensure the pipes are clear, please repeat this process at least two times.

Please note: If the pipe cleaner brush or the compressed air does not clear the drain pipe due to a frozen drain line, please open the cover of the evaporator section to check if the drain pan is frozen. If frozen, use a cup or jug of hot water and pour over the drain pan like the picture below. Once melted, you may continue to clean the drain pipe with the compressed air or a pipe cleaning brush.

The drain pipe maintenance must be done quarterly (every 3 months) to ensure that there is no water leaks from the vent of the unit. For any assistance, please call 1-888-328-9050

Wiring Diagrams

IQUBE Medium Temp Model (110V/60Hz/1Ph) : IQT031MRA, IQT050MRA

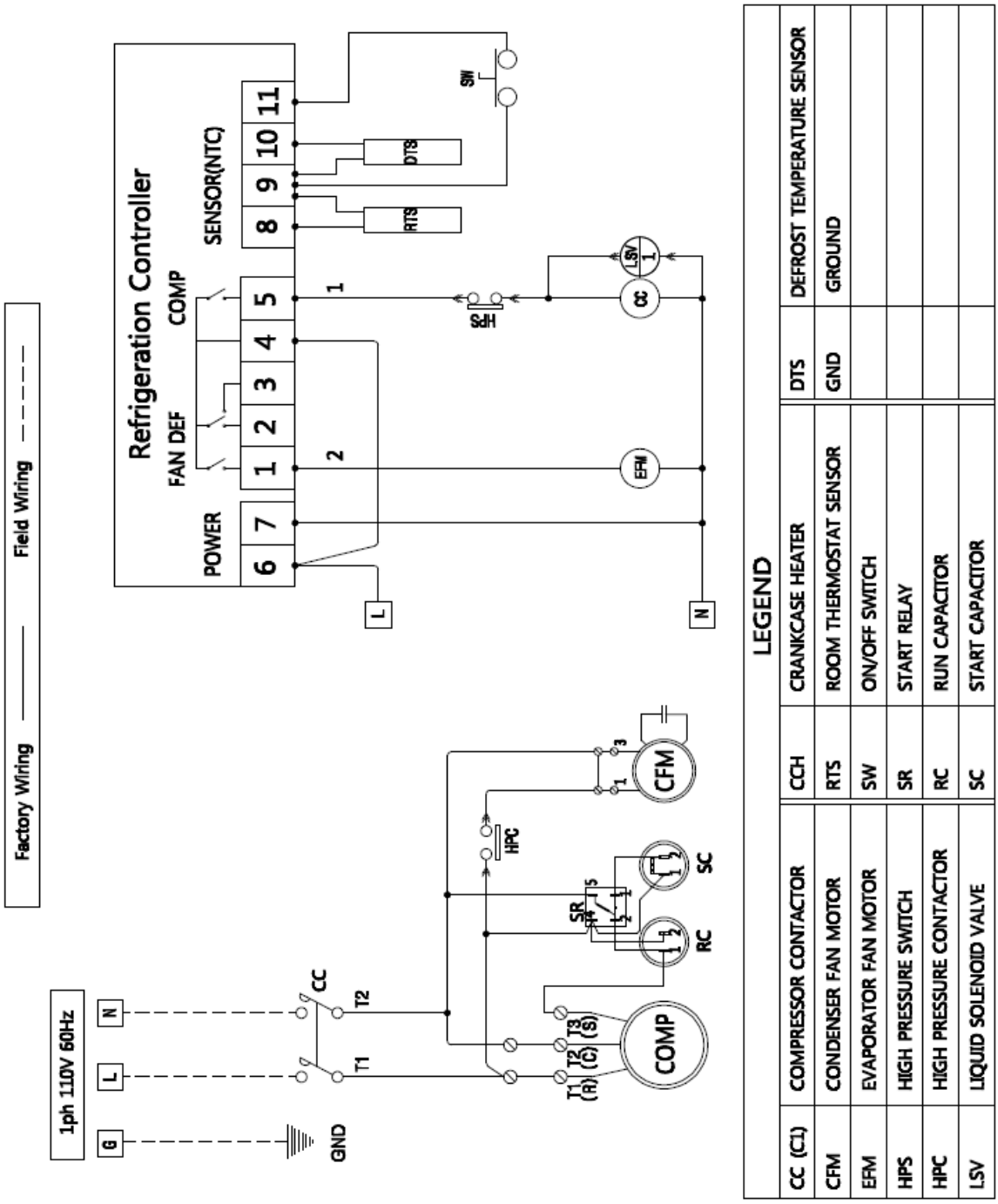

IQUBE Medium Temp Model (220V/60Hz/1Ph) : IQT050MRB

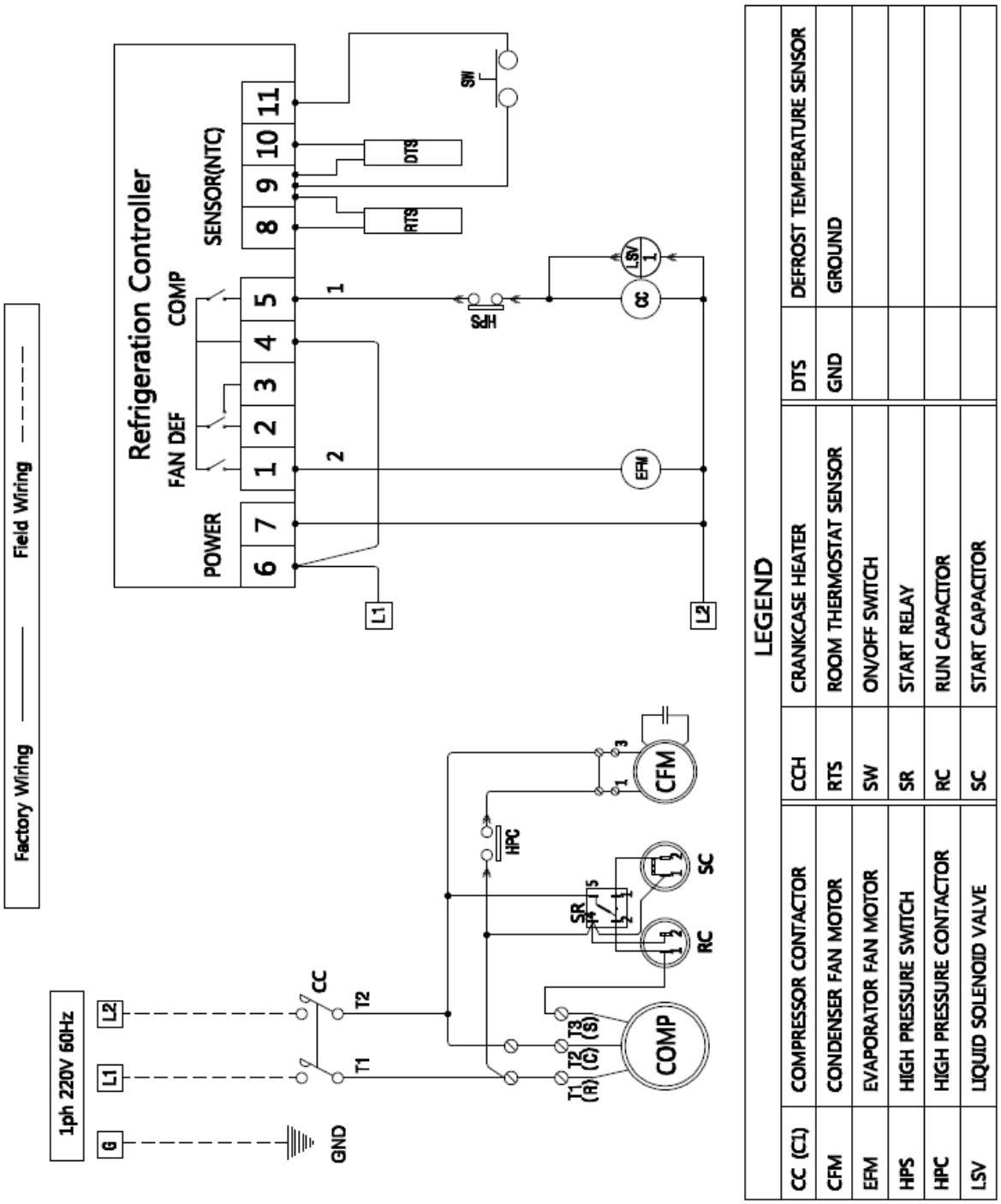

IQUBE Medium Temp Model (220V/60Hz/1Ph) : IQT067MRB, IQT075MRB

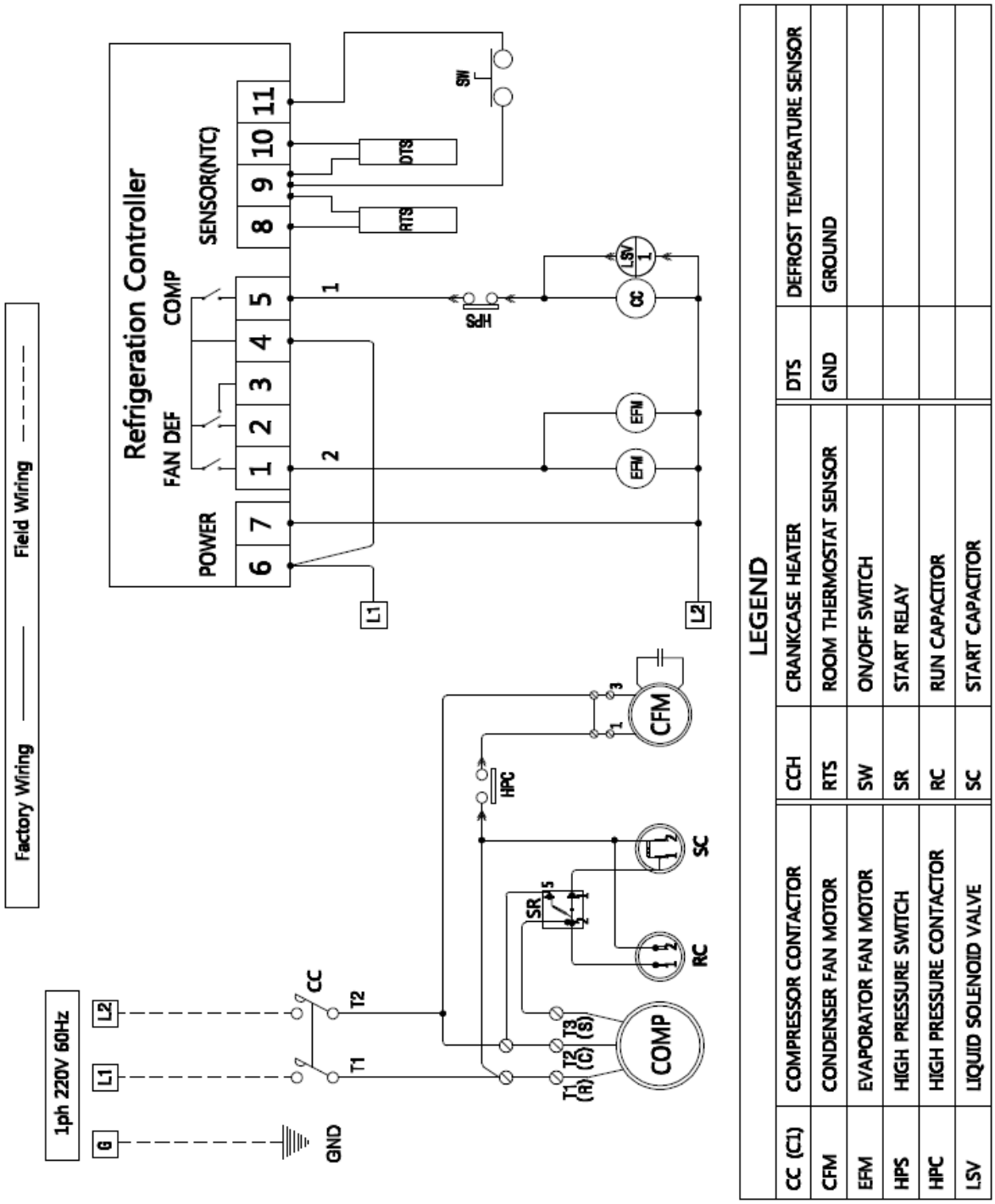

IQUBE Medium Temp Model (220V/60Hz/1Ph) : IQT103MRB, IQT140MRB

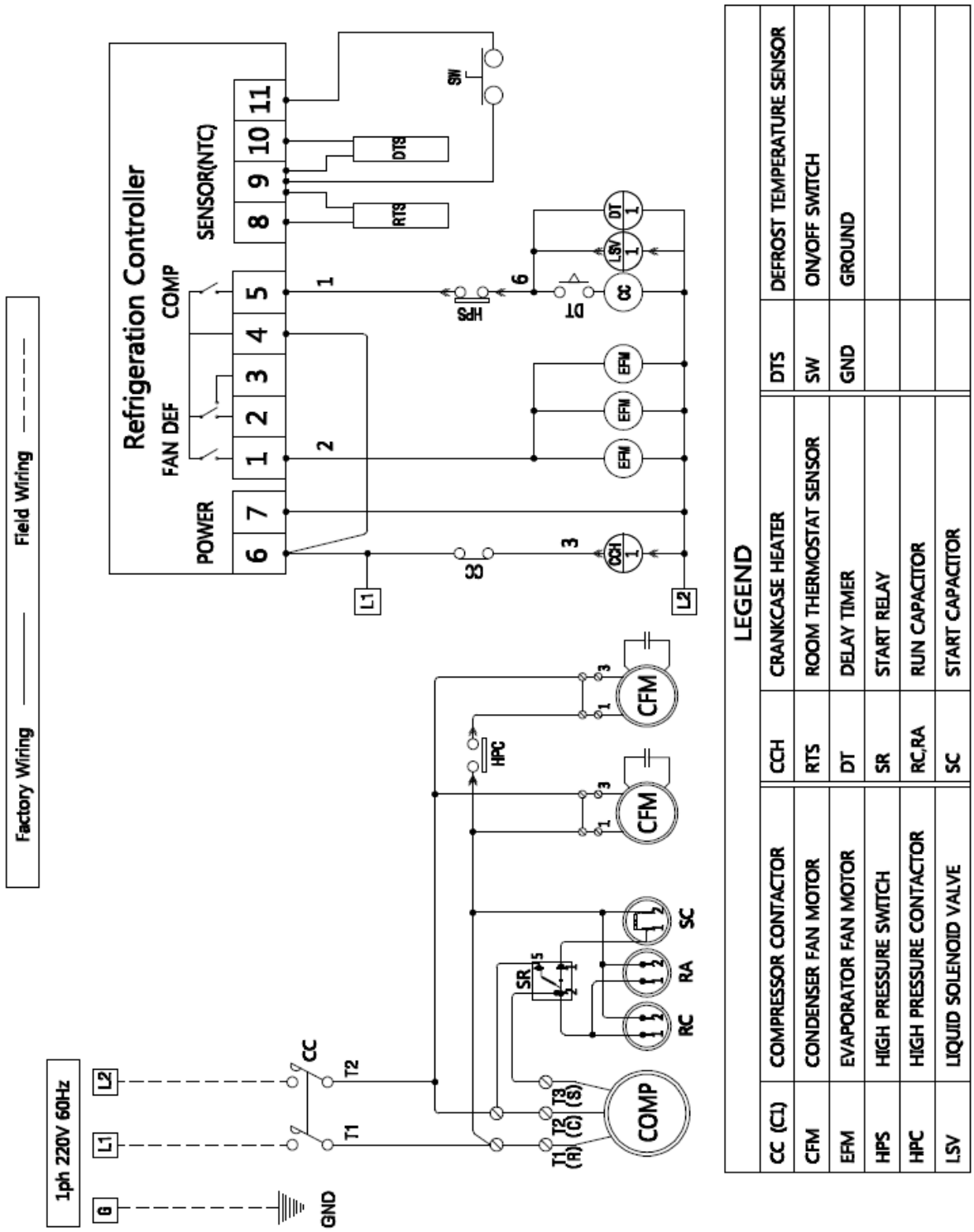

IQUBE Low Temp Model (220V/60Hz/1Ph) : IQT042LRB

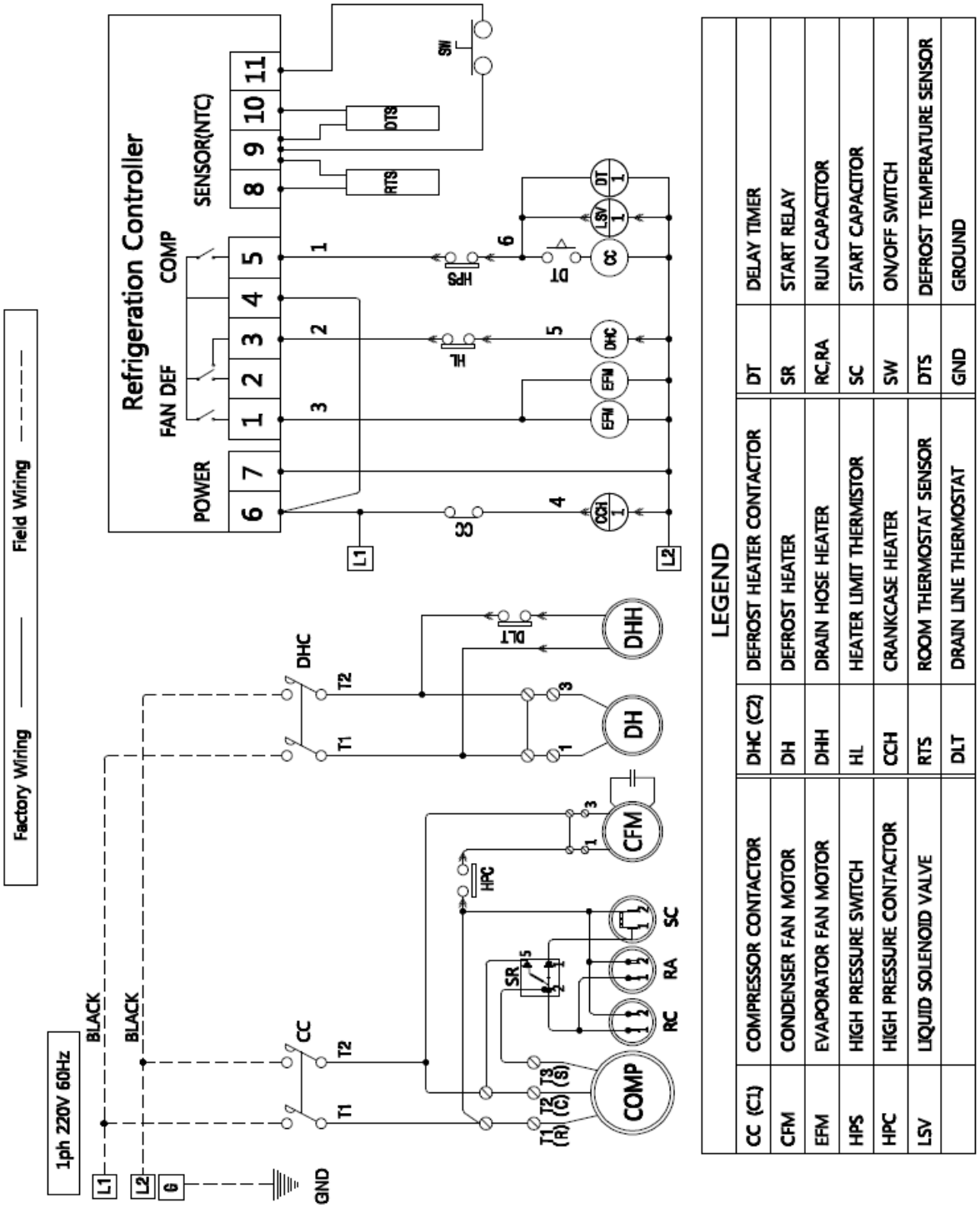

IQUBE Low Temp Model (220V/60Hz/1Ph) : IQT066LRB

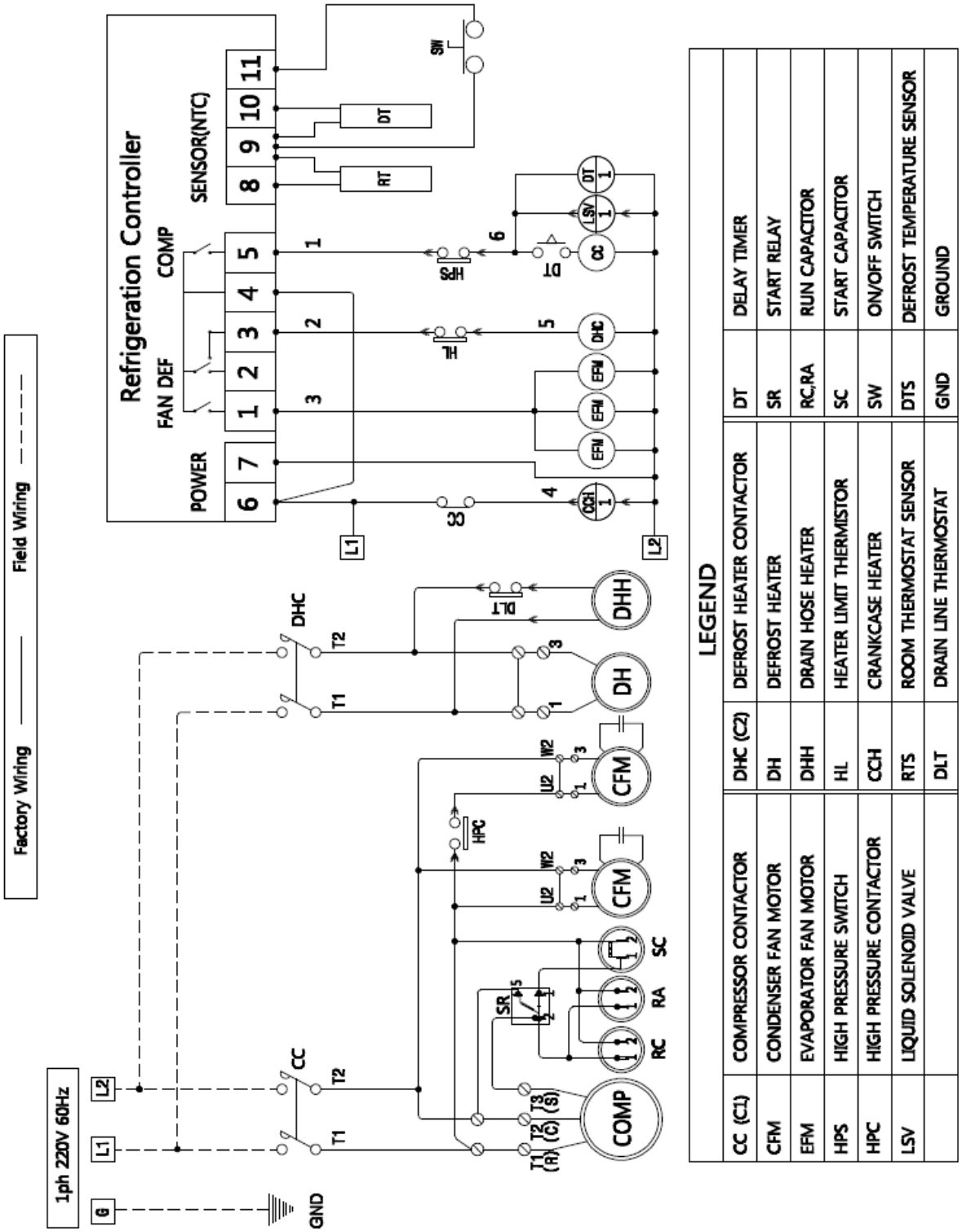

Warranty Statement

Infinity Refrigeration warrants to its purchasers that IQUBE, except service parts, will comply to the manufacturer's specification and will be free of defects in materials and workmanship. Should any defects occur, Infinity Refrigeration will correct the defects subject to the following terms.

Labor: For a period of **ONE YEAR (12 months)** from date of installation or **18 months** from the date of factory shipment, Infinity Refrigeration will cover by the limited labor warranty (stated in labor warranty statement).

Parts: For a period of **TWO YEARS (24 months)** from the date of installation or **30 months** from date of factory shipment, Infinity Refrigeration will supply new or at its option, rebuild replacement parts.

Compressor: For a period of **TWO YEARS (24 months)** from date of installation or **30 months** from date of factory shipment, Infinity refrigeration will supply a new compressor one time. The warranty period for the compressor can be **extended for 3 years** (can be purchased separately). Under the 3 year extended compressor warranty, Infinity Refrigeration will supply a new compressor one time.

THE WARRANTY DOES NOT COVER THE FOLLOWING:

- Freight/ shipping damage.
- Un-packaging/ removal of protective shipping material.
- Damage during installation/handling process.
- Operation exceeding manufacturer's limitations as specified in the owner's manual.
- Any owner other than the original purchaser/owner.
- Services required as a result of insufficient or incorrect AC supply voltage. (Voltage should be within 10% +/- of specified voltage on the name plate.
- Malfunction due to tampering with the manufacturer's controller settings.
- Modifications to factory wiring and incorporation of additional parts without written approval.
- Units purchased from non authorized dealers or not directly from Infinity Refrigeration
- Service performed by a non-authorized/qualified service technician.
- Indirect, consequential and special damages, except as required by Federal or State laws.
- Failure, loss, damage or personal injury due to; accident, neglect or abuse by the end user.
- Any maintenance required as stated in the installation/service manual.
- Damage from Act of God (IE: floods, storms and other natural disasters).

THE WARRANTY AND REMEDY STATED ABOVE ARE EXCLUSIVE AND IN LIEU OF ALL OTHER EXPRESS OR IMPLIED WARRANTIES INCLUDING, BUT NOT LIMITED TO, THE IMPLIED WARRANTIES OF MERCHANTABILITY OR FITNESS FOR A PARTICULAR PURPOSE. SOME LAWS DO NOT ALLOW EXCLUSION OF IMPLIED WARRANTY, THEREFORE THIS WARRANTY SHALL BE DEEMED MODIFIED TO BE CONSISTENT WITH SUCH LAWS.

Some states do not allow limitation on how long an implied warranty lasts; therefore these limitations or exclusions may not apply to you. This limited warranty gives you specific legal rights. You may also have other rights that may vary from state to state. This warranty applies to the United States, Canada.

Page Intentionally Left Blank

INFINITY
REFRIGERATION
9419 Ann Street

Santa Fe Springs, CA 90670

Toll Free : 888-328-9050

FAX : 562-287-8903

http://www.infinityref.com