Resource Manual

Installation Guide • Operating Procedures • Parts Breakdown

MODEL SS600

TRANSPORT HYDRAULIC COOLING SYSTEM

MODELS

SS600ER	***Electric Fan with Relief Valve***
SS600EV	***Electric Fan with Control Valve***
SS600HR	***Hydraulic Fan with Relief Valve***
SS600HV	***Hydraulic Fan with Control Valve***

Model #:_____

Serial #:_____

Installation Date:_____

INSTALLATION GUIDE , OPERATING PROCEDURES & PARTS BREAKDOWN

MODEL SS600

INDEX

INSTALLATION GUIDE , OPERATING PROCEDURES & PARTS BREAKDOWN

Please read this guide carefully before installing and operating your MODEL SS600 THERMAFLOW system.

The THERMAFLOW assembly is designed to cool and filter the oil required to operate your hydraulic system. The oil is cooled by forcing air across cooling fins on the heat exchanger. This system utilizes either an electric or hydraulic fan motor to force air across the fins. The fan motor options and control valve options are described below.

The Model SS600 has 2 fan motor options, Electric or Hydraulic. The Electric fan motor option has a 12VDC cooling fan which is operated with a manual, weather-tight toggle switch. This switch can be either wired hot or it can be wired with the ground wire connected to an air operated on/off switch. Wiring the fan switch through the air switch will give the operator automatic control. With the fan switch “ON” the fan will cycle on when the PTO is engaged and then cycle “OFF” when the PTO is disengaged. This option will also allow the operator to turn the fan off in cold weather to bring the oil temperature up quicker. If you choose to wire the fan switch hot you will run the risk of over-heating the hydraulic oil if you do not turn the fan “ON”. The Hydraulic fan motor option has a fixed pressure compensated flow control that automatically cycles the fan “ON” when the hydraulic system is running and “OFF” when not running. This option comes plumbed from the factory.

Models SS600(E)(H)R comes with a standard relief valve system. While Models SS600(E)(H)V have the optional control valve system installed. This control valve system will allow the operator to start, stop and change rotation of the product pump by simply shifting the control valve. This control valve is integrally mounted and plumbed within the cabinet to save frame rail space, lower installation times and to reduce hose and fitting costs.

Because different product pump applications require different speed and power requirements, your THERMAFLOW system was custom engineered for a particular application. If the system is operated beyond its designed capacity, overheating and/or component damage may result.

STEP 1 POSITIONING & MOUNTING

The Model SS600 is designed to mounted on the frame rail, either on the driver or passenger sides.

A) Follow Diagram A for proper mounting hole locations and shock mount assembly.

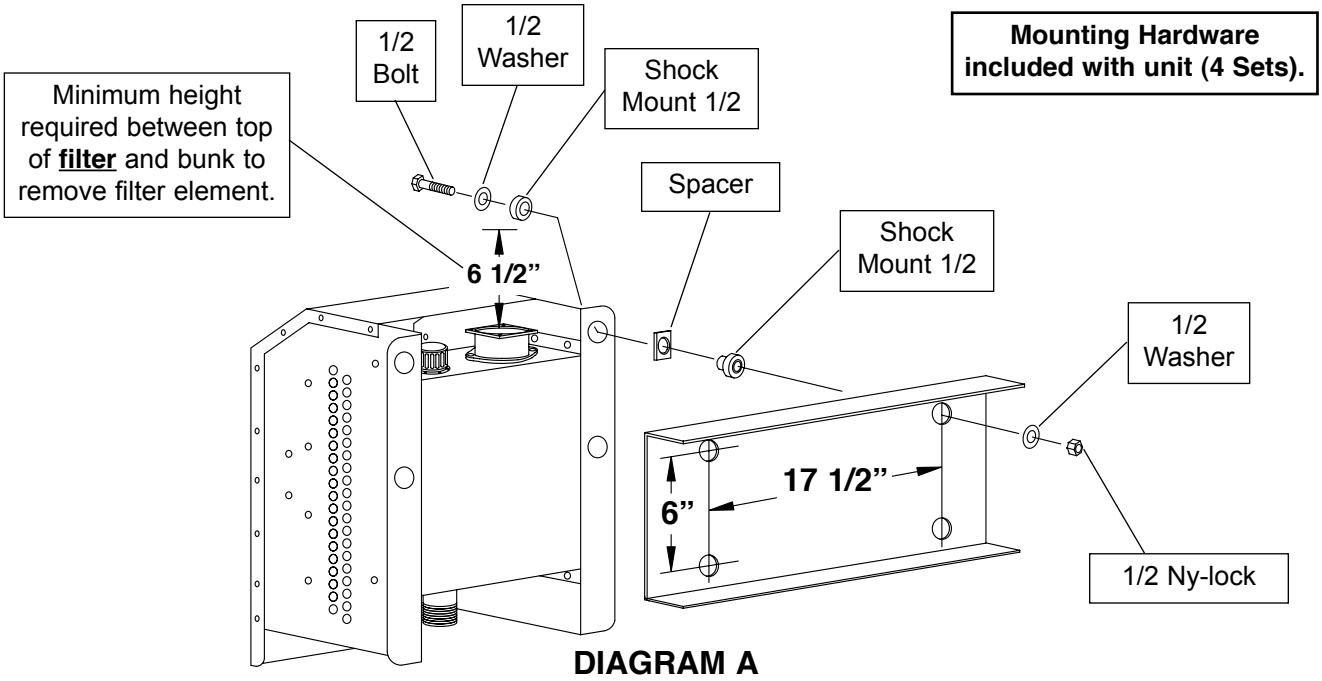

DIAGRAM A

STEP 2 INSTALLING THE PTO & HYDRAULIC PUMP

A) Install the PTO to the transmission and mount the hydraulic pump according to the instructions included with the PTO.

HELPFUL HINT: If you are using a direct mount hydraulic pump/PTO combination, be sure that the pump splines are well lubrication with a heavy grease. This grease will prevent premature spline wear on the PTO and pump shafts. A small packet of this grease is available through STAC Inc P/N 300980. Also available from both MUNCIE and CHELSEA is a new option for a greaseable shaft. This option allows you to grease these splines without pulling the pump off the PTO.

STEP 3 ELECTRICAL WIRING *(Models SS600ER & SS600EV)*

Models *SS600ER & SS600EV* have a 12 VDC fan motor and can be wired two different ways. Listed below are these options.

OPTION #1 - FAN SWITCH WIRED HOT

This option wires the fan switch so that you can turn the fan on at anytime regardless of whether the tractor is running or not.

ELECTRICAL CONNECTIONS

RED WIRE: ***Connect to the positive (+) 12VDC battery terminal (15 Amps) through circuit breaker (150153) provided in electrical kit (150525).***

BLACK WIRE: ***Connect to the truck frame or to the negative (-) battery terminal.***

For further illustration follow **DIAGRAM B** on Page 4.

NOTE: We recommend that the power supply be taken directly from a battery post or similar high current location.

OPTION #2 - FAN SWITCH GROUNDED THROUGH AN AIR SWITCH

This option wires the fan switch so that you will only be able to turn the fan on when the PTO is engaged. This option will allow you to leave the fan switch “ON” so that you have an automatic operation of the fan when the PTO is engaged. PTO disengaged fan “OFF”, PTO engaged fan “ON” via an air switch.

ELECTRICAL CONNECTIONS

RED WIRE: ***Connect to the positive (+) 12VDC battery terminal (15 Amps) through circuit breaker (150153) provided in electrical kit (150525).***

BLACK WIRE: ***Connect to air switch and frame ground.***

For further illustration follow **DIAGRAM C** on Page 4.

NOTE: We recommend that the power supply be taken directly from a battery post or similar high current location.

STEP 3 ELECTRICAL WIRING *(CONTINUED)*

Diagrams B & C below illustrated proper electrical wiring for Models **SS600ER & SS600EV**.

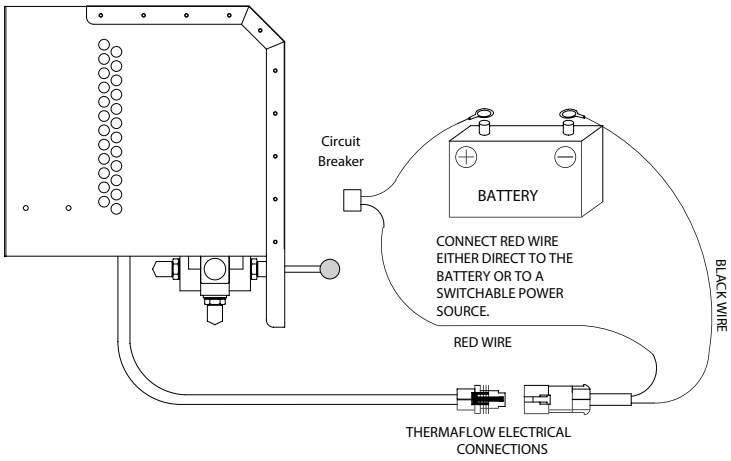

DIAGRAM B

Above electrical schematic illustrates the proper wiring for **OPTION #1** from Page 3.

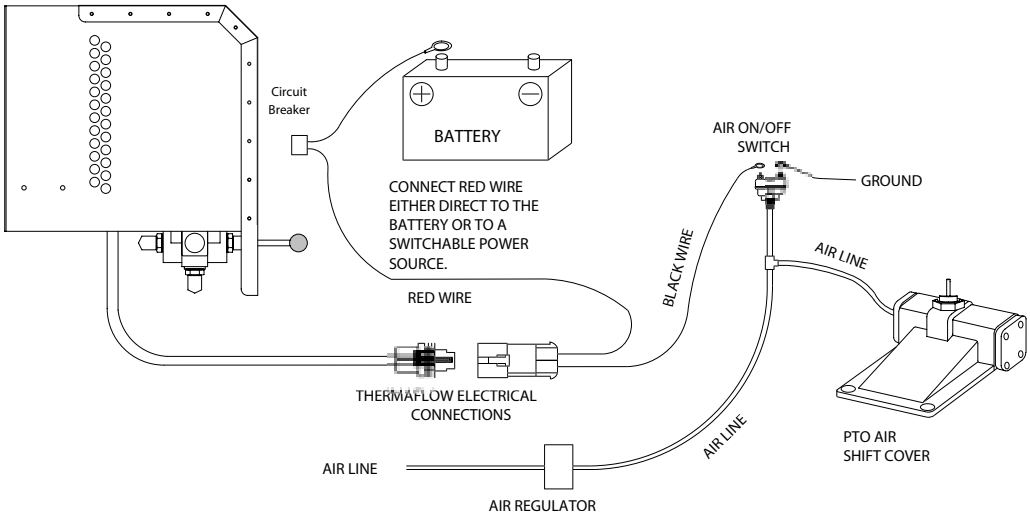

DIAGRAM C

Above electrical schematic illustrates the proper wiring for **OPTION #2** from Page 3.

STEP 4 HYDRAULIC PLUMBING

DIAGRAMS D & E show proper plumbing for Models SS600ER, SS600EV, SS600HR & SS600HV. Please carefully read the Helpful Hints and Notes listed below before beginning.

HELPFUL HINT: We recommend the use of 1 1/2" suction hose for all applications, especially if the THERMAFLOW Assembly will be operated in cold weather. If the suction hose is too small the hydraulic pump will cavitate and fail prematurely. 3/4" pressure hose recommended for flows up to 25 gpm. 1" pressure hose recommended for flows greater than 25 gpm.

NOTE*: Be careful not to over tighten NPT threads. It is very easy to crack these types of ports when tightening fittings.*

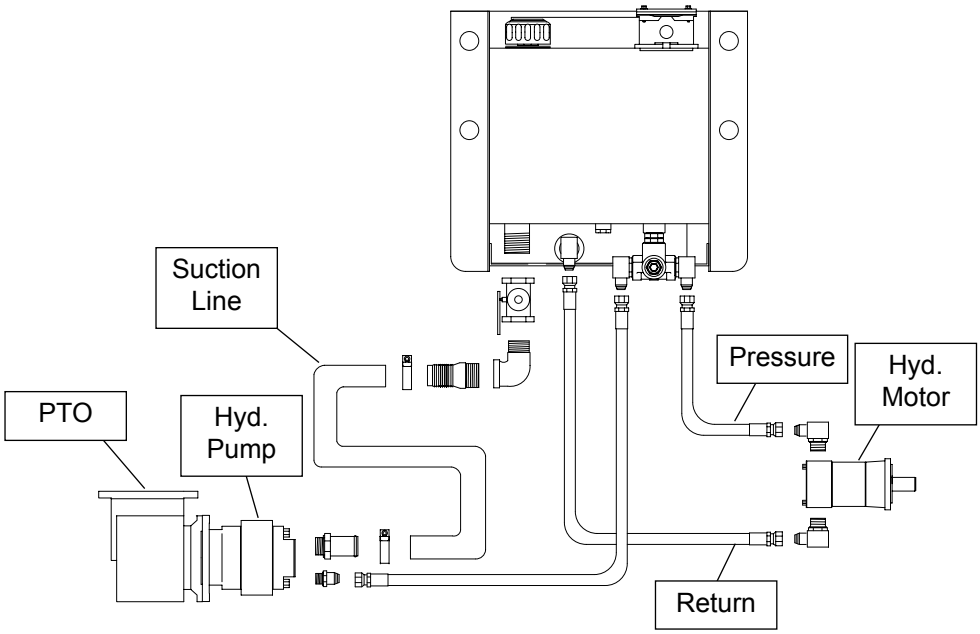

DIAGRAM D

Hydraulic plumbing diagram for THERMAFLOW MODEL **SS600ER & SS600HR**

STEP 4 HYDRAULIC PLUMBING (Continued)

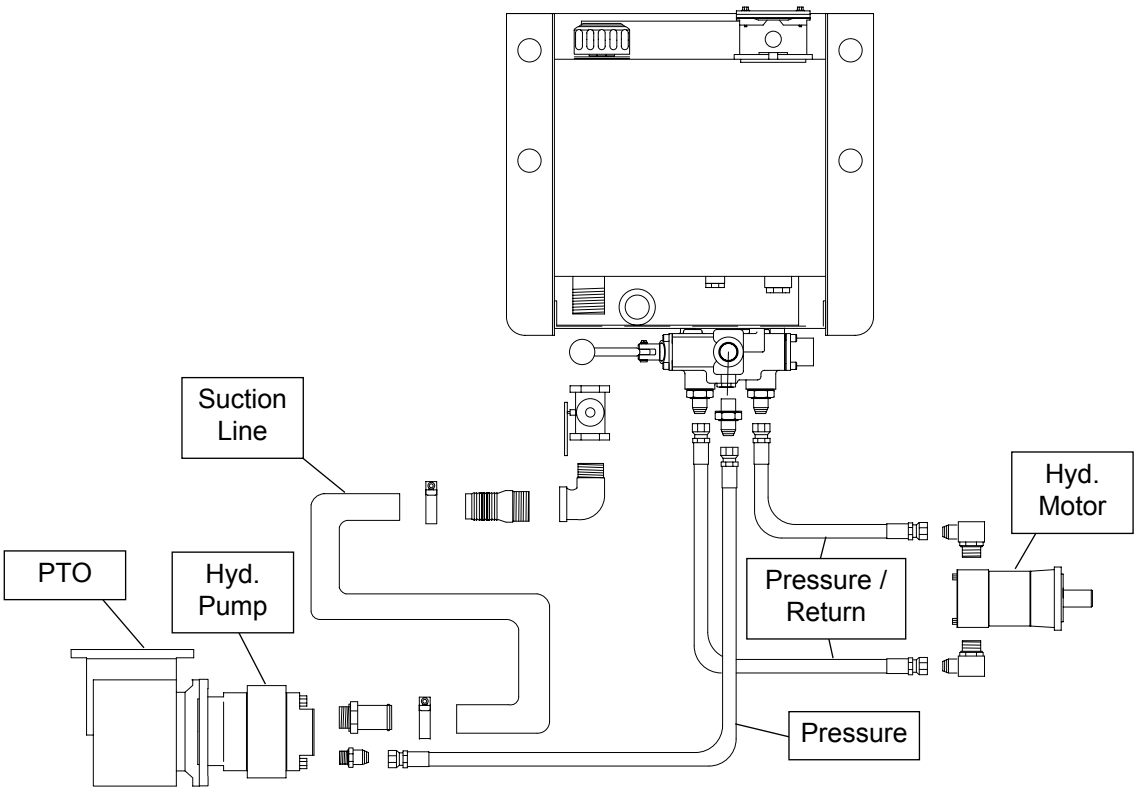

DIAGRAM E

Hydraulic plumbing diagram for THERMAFLOW MODEL **SS600EV & SS600HV**

STEP 5 Final Assembly

A) Complete all hydraulic plumbing.

B) Fill the reservoir until the oil level gets to the top black line on the site level gage.

NOTE*:* After the initial start up procedure you will need to add oil due to the hydraulic lines filling up to capacity.

NOTE*: Over-filling the reservoir will cause the oil to expand up through the breather assembly when the oil warms up.*

NOTE: We recommend using a high grade of hydraulic oil with a Pour Point of -50 F. This will ensure proper oil flow during extreme cold weather operation. Use of synthetic hydraulic oils is also recommended. Recommended Oil: MOBIL DTE13 or equivalent.

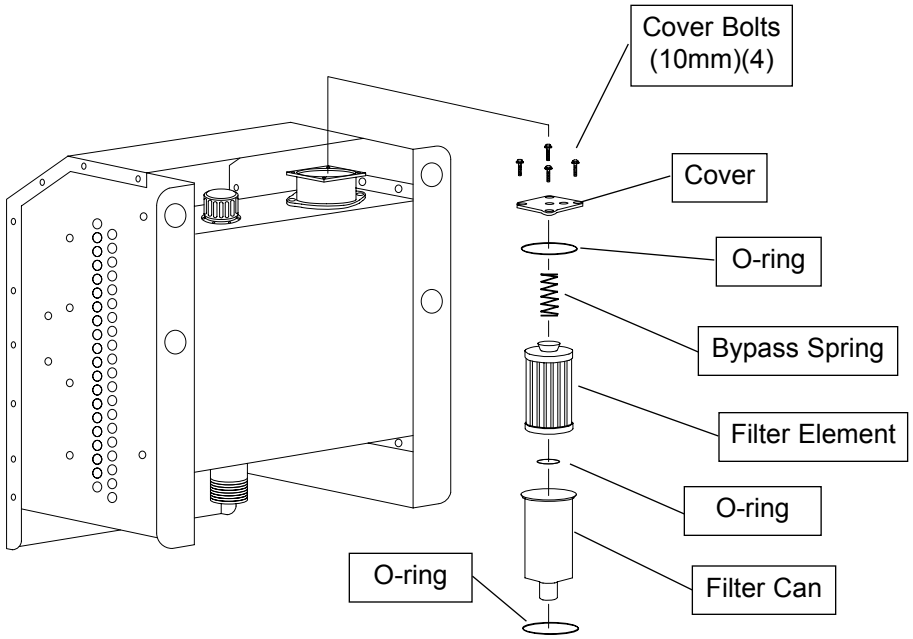

DIAGRAM F

Filter assembly procedures for all THERMAFLOW MODEL **SS600**

STEP 6 START-UP PROCEDURES

The following steps are to ensure that the THERMAFLOW assembly is operating properly.

NOTE*:* Before engaging the PTO, make sure that all hydraulic lines are plumbed and properly tightened.

1) Slowly engage the PTO with engine at idle speed.

NOTE: Watch the oil level in the reservoir. Be ready to add more oil as needed to maintain the oil level between the black and red lines on the site level gage.

2) Check for hydraulic leaks and fix as needed.

3) Check for fan operation (Electric & Hydraulic).

4) Carefully Tach the product pump speed.

5) Slowly increase the engine speed until desired product pump speed is obtained.

6) Run system for at least five minutes to ensure that system is sufficiently cooling the hydraulic oil. If you have a Hydraulic Flow Meter Kit set required pressure and flow rates as needed.

7) Slow engine to idle and disengage the PTO.

8) System is ready for operation.

System Maintenance

Hydraulic

Fluid:

- Drain and replace hydraulic oil every 6 to 12 months depending on use.
- Recommended Fluid: Mobil DTE 13 or Equivalent.

Filter:

- Remove 4 cap screws (10mm) on top of filter housing.
- Remove filter cartridge and spring.
- Replace with new filter cartridge and spring Part Number 300331
- Apply anti-seize to cap screws and tighten.

Pump:

- Inspect periodically for leaks.
- Check hoses for signs of wear.

Motor:

- Inspect periodically for leaks.
- Check hoses for signs of wear.

PTO

- Grease output shaft every 6 to 12 months depending on use.
- If PTO does not have a grease zerk on output shaft, remove direct mount hydraulic pump and grease the output shaft using a high quality gear lube.

Troubleshooting

Safety First!

Think about it before you do it. Our systems use controlled fluid pressure and converts it to rotational movement. This means that the system pressure operates around 2000 psi. A pin hole leak of fluid at this pressure can be dangerous. Use caution when loosening fittings, system pressure can be maintained for a period of time after shut-down.

Troubleshooting

Always inspect the things easiest to eliminate first. Look for faulty linkage or wiring that controls the PTO,pump or motor. Look at the fluid level and appearance of the oil. Check temperatures and pressures.

Excessive Heat:

- Clean air passages through heat exchanger
- Check fan operation
- Check setting of relief valve
- Check temperature of suction line vs outlet line temperature. If the outlet temperature is noticeably hotter, the pump is cavitating.
- Check for contamination in relief valve. Clean and replace.
- Check for added flow controls. If a flow control has been added to the system, excess heat can be generated by the added restriction to flow

Loss of Motor Speed:

- Check oil level.
- Ensure recommended engine idle speed is maintained.
- Check output pressure of the pump. If system pressure cannot be maintained, attempt to adjust the relief valve setting to max system pressure. If this does not make a noticeable change, make sure to return relief setting to original position and bring the pump and motor to a hydraulic specialist for bench testing and possible replacement.

Excessive Noise:

- Check oil level. Fill to proper level
- Ensure use of recommended oil type and weight
- Ensure suction line to pump is at least 1 1/2”
- Ensure there is no restriction in suction line.

Oil Discoloration:

- Ensure suction line connections are tight.
- Ensure oil is free from water and contaminants. Drain and refill with recommended oil and replace filter.
- Ensure use of recommended oil type and weight

Specifications

Max Flow Rate:	30 gpm
Max Pressure	5000 psi
Reservoir:	3.5 gal
Weight	79 lbs
Suction Line	1.5 Inch
Pressure Lines	3/4 Inch
Warranty	2 years

Oil - The recommended oil is Mobil BTE 13 or equivalent. Mobil DTE 13 is a supreme performance anti-wear hydraulic oil engineered for wide temperature range applications. It exhibits optimum flow characteristics at sub-zero temperatures and is resistant to shearing and viscosity loss so that system efficiency is maintained and internal pump leakage is minimized at high operating temperatures and pressures.

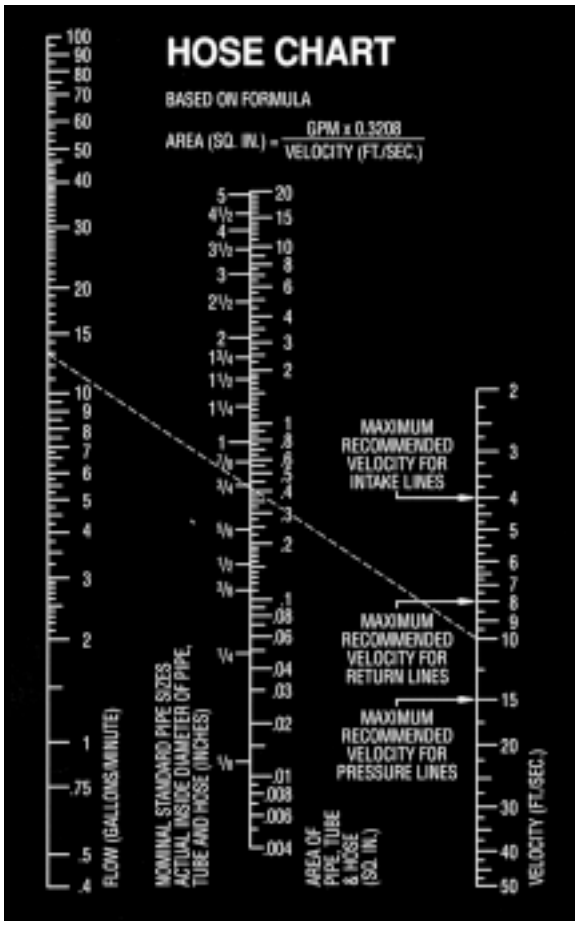

MODEL SS600ER

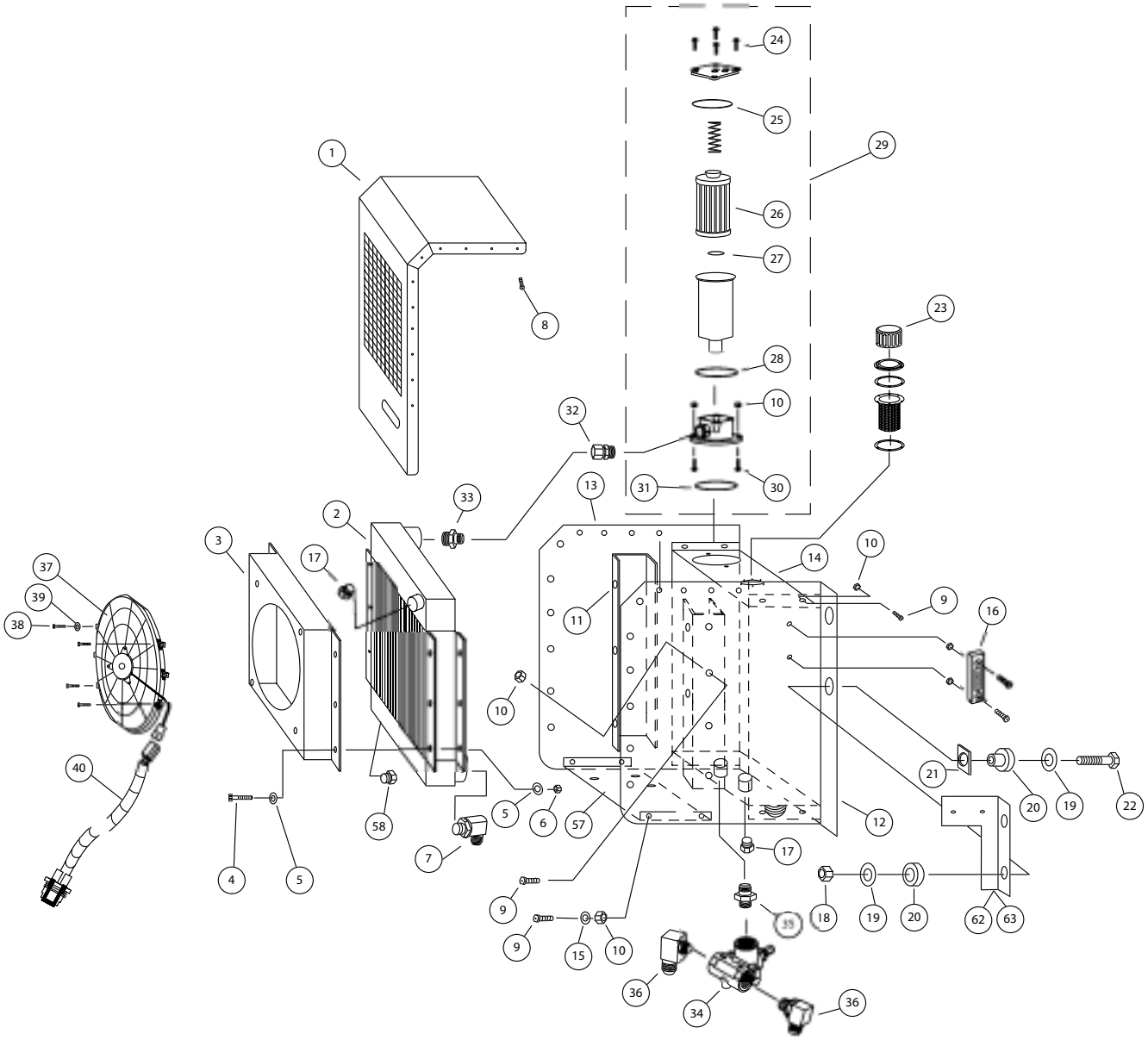

MODEL SS600EV

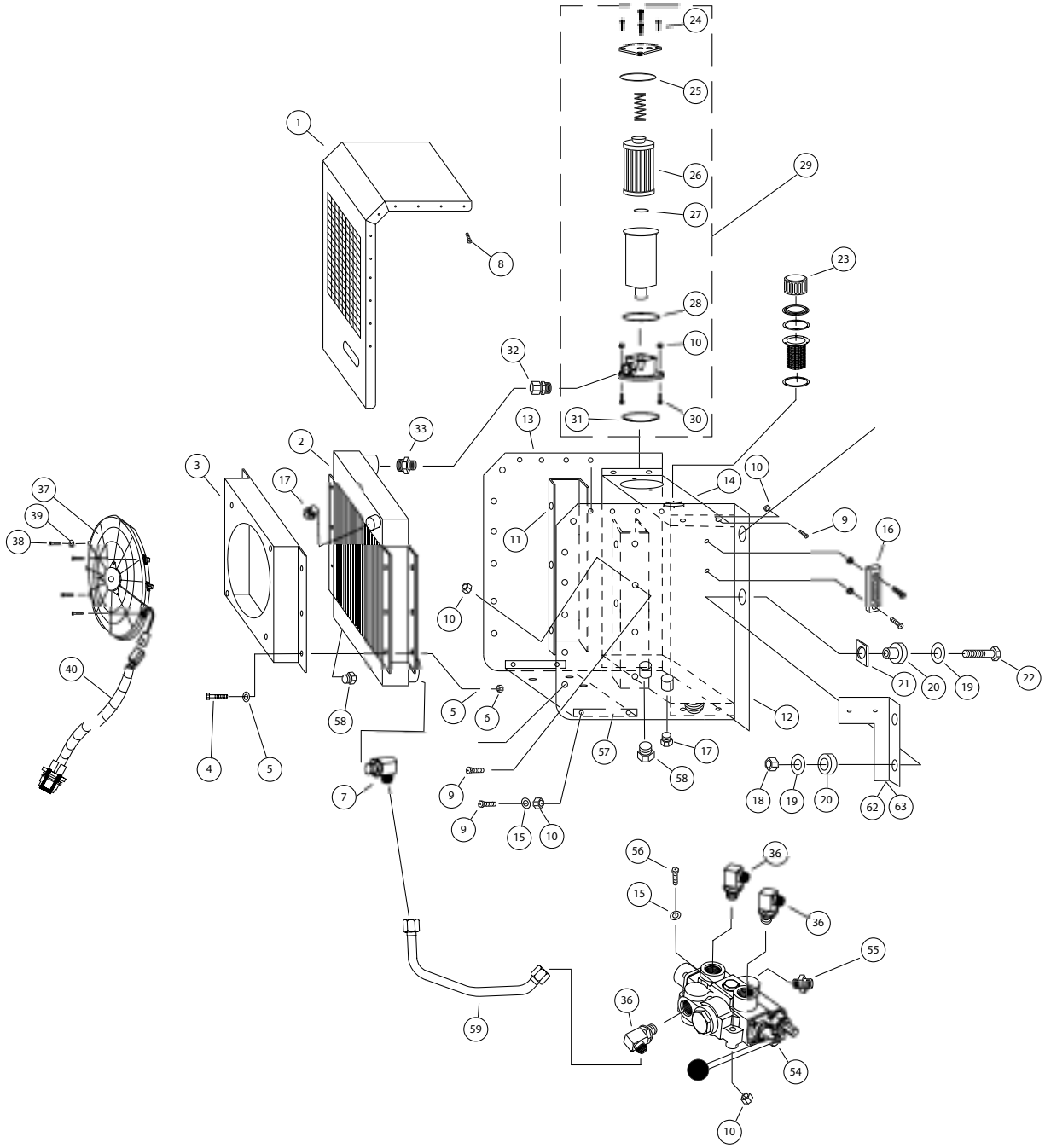

MODEL SS600HR

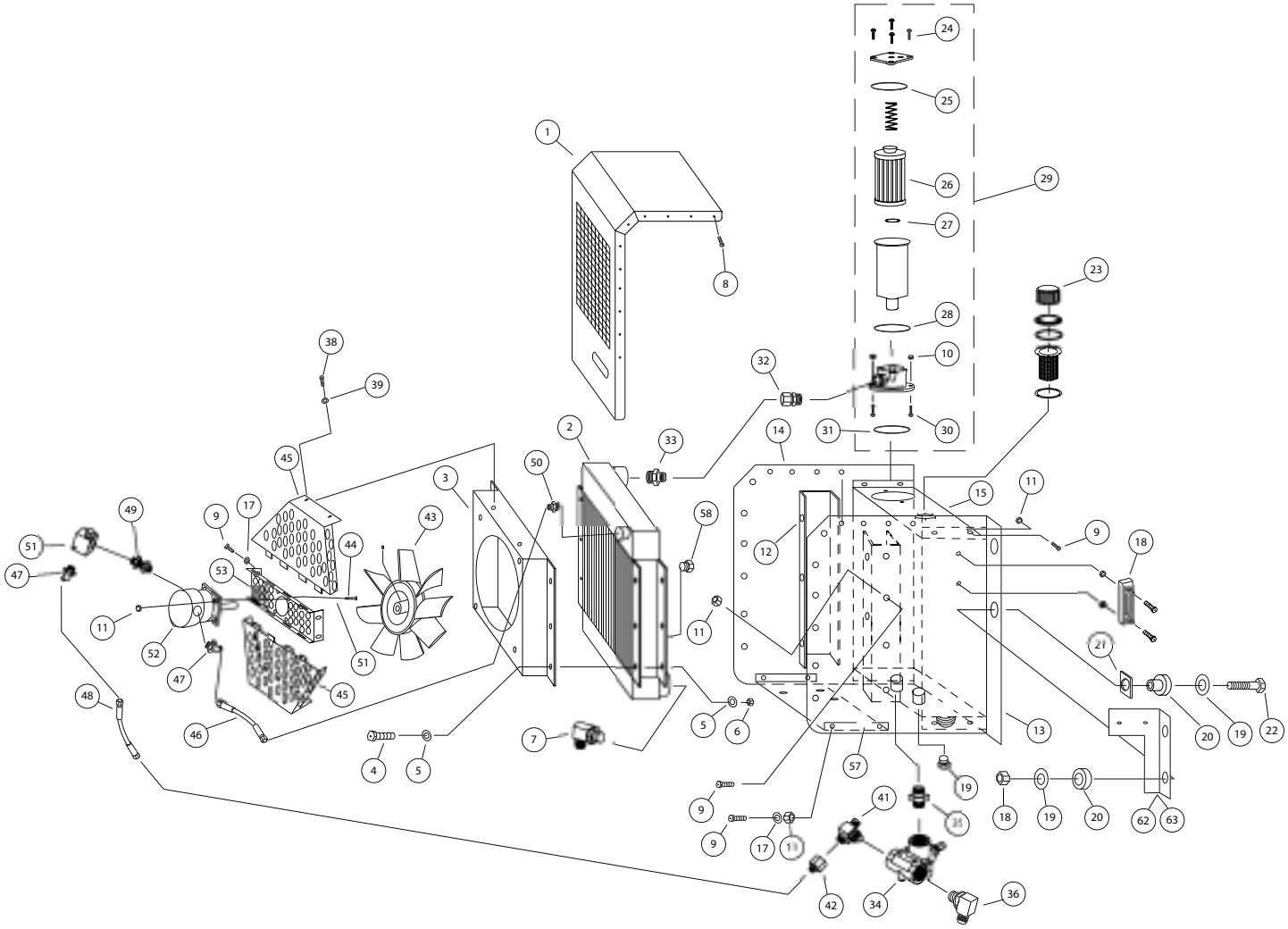

MODEL SS600HV

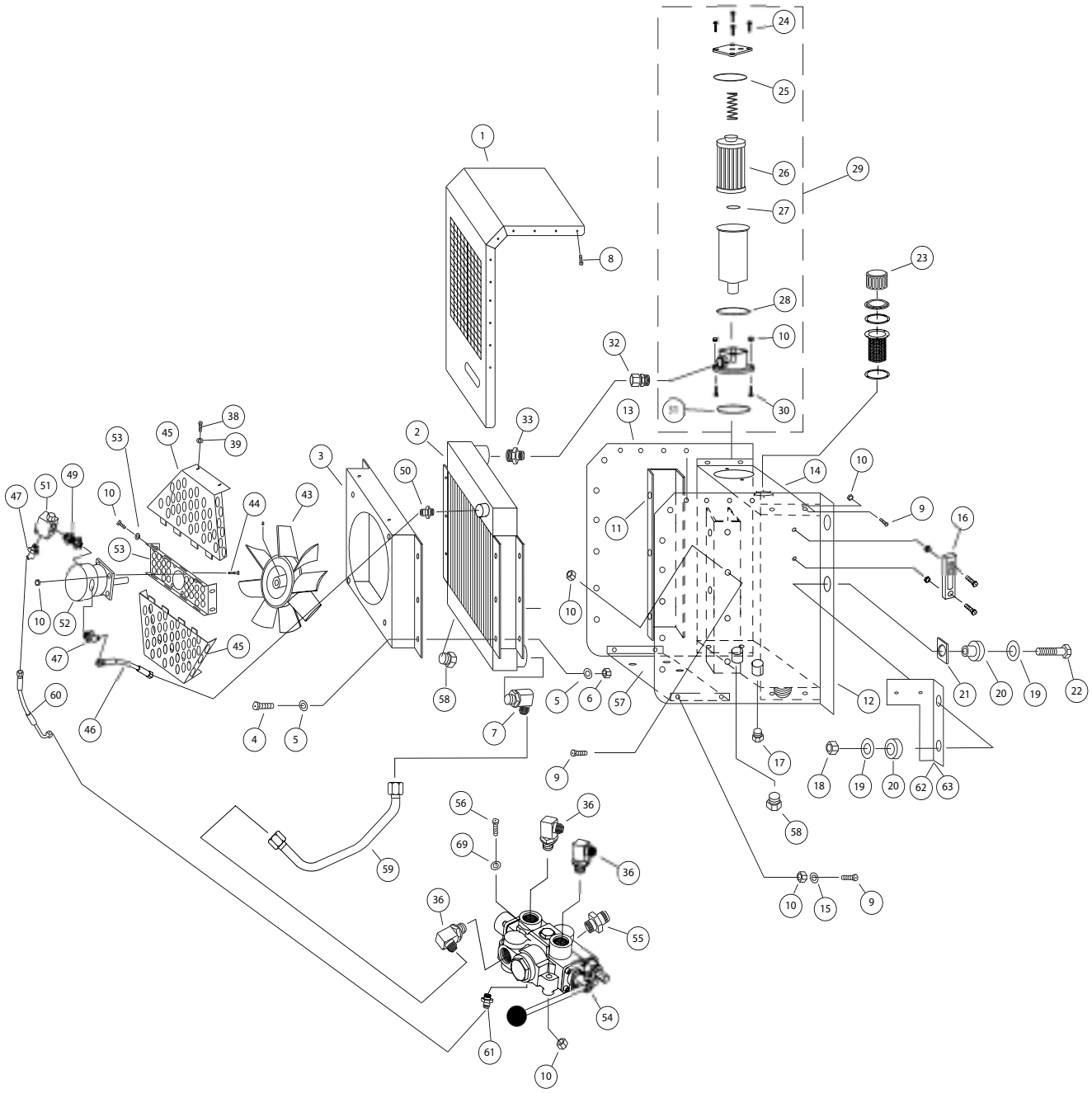

Parts List

Item #	Part #	Description
1	600040	Cover 600040
2	600300	Heat Exchanger
3	600030	Fan Shroud
4	3/8X3 1/2 HHCS	Bolt, Heat Exchanger
5	3/8 FW	3/8 Flat Washer
6	600254	3/8 Lock Nut
7	375419	Elbow, Core inlet
8	600238	10-32X1/2 BHSCSSS
9	600240	5/16-18x3/4 BHSCSSS
10	300254	5/16 Lock Nut
11	600012	Core Support
12	600020	Right Side Panel
13	600010	Left Side Panel
14	600000	Tank
15	300258	3/8 Flat Washer
16	300334	Site Glass
17	300410	Drain Plug
18	300268	1/2-13 Lock Nut
19	300270	1/2 Flat Washer
20	300200	Shock Mount
21	300032	Spacer
22	300266	1/2X3 1/2 Grd 8 Bolt
23	600332	Breather Assy
24	300330S	Cap Screw Filter Assy
25	300330ORC	O-ring #568-340, Filter Cover
26	300331	Filter Cartridge
27	300330ORE	O-ring #568-223, Element
28	300330OREC	O-Ring #568-151, Element Canister
29	300330	Filter Assy
30	300250	5/16-18X1 HHCSSS
31	300330ORH	O-Ring #568-341, Housing
32	150714	Fitting, Filter Housing
33	375418	Fitting, Core Outlet

Parts List

Item #	Part #	Description
34	300702	Relief Valve RV1H
35	300748	Fitting, Relief Valve to Tank
36	300708	Fitting, Relief Valve 6801-12
37	600306	Fan, 12V 150030101500
38	300238	10-32 X 1/2 SS Bolt, Fan
39	300242	#10 Flat Washer, Fan
40	600515	Wire Harness
41	6803-12	Branch Tee
42	150904	Reducer
43	600820	Hydraulic Fan
44	300250	Bolt, Fan Motor
45	600852	Fan Guard
46	600892	Hose, Fan Motor Return
47	600910	Fitting 6802-6-8
48	600894	Hose, Fan Motor Pressure
49	150908	Fitting
50	150912	Fitting
51	600830	Flow Control
52	150510	Hydraulic Fan Motor
53	600850	Hydraulic Fan Motor Mount/Guard
54	150722	Control Valve
55	300730	Fitting, Control Valve Inlet
56	300740	Bolt, Control Valve
57	600050	Valve Mnt. Brkt.
58	300412	Plug
59	600728	Valve Tube
60	600890	Hose, Fan Motor Pressure
61	600720	Fitting, Control Valve
62	600006	Spacer Brkt Left
63	600008	Spacer Brkt Right

Product Offering

Fans
Spal
Crowley

Fittings
Tompkins
Weatherhead
Faster

Heat Exchangers
Thermal Transfer
Flat Plate

Hydraulic Motors
Barnes
Eaton/Charlynn
Muncie
Permco
Rexroth

PTO's
Muncie

Pumps
Muncie
Parker
Permco
Rexroth

Notes

THERMAFLOW WARRANTY

The THERMAFLOW SS600 Series Hydraulic Cooler is warranted against any defect in material and workmanship which existed at the time of sale by STAC Inc. according to the following provisions, subject to the requirements that the Cooler must be used only in accordance with the catalogue and package instructions.

The Cooler is warranted for a period of TWO Years from the date of installation. If during the warranty period the cooler fails to operate to STAC's specifications due to a defect in any part in material or workmanship that existed at the time of sale by STAC Inc., the defective part will be repaired or replaced, at STAC Inc.'s discretion, at no charge, if the defective part is returned to STAC Inc. with transportation prepaid.

The above warranty shall terminate if any alterations or repairs are made to the System other than at an authorized dealer or if the cooler is used on any equipment other than the equipment upon which it is first installed.

THE FORGOING WARRANTIES ARE IN LIEU OF ALL OTHER OBLIGATIONS AND LIABILITIES, INCLUDING NEGLIGENCE AND ALL WARRANTIES OF MERCHANTABILITY AND SUITABILITY, EXPRESSED OR IMPLIED AND STATE STAC INC.'S ENTIRE AND EXCLUSIVE LIABILITY AND BUYER'S EXCLUSIVE REMEDY FOR ANY CLAIM OF DAMAGES IN CONNECTION WITH THE SALE, REPAIR OR REPLACEMENT OF THE ABOVE GOODS, THEIR DESIGN, INSTALLATION OR OPERATION. STAC INC. WILL IN NO EVENT BE LIABLE FOR ANY DIRECT, INDIRECT, SPECIAL, INCIDENTAL OR CONSEQUENTIAL DAMAGES WHATSOEVER, AND OUR LIABILITY UNDER NO CIRCUMSTANCES WILL EXCEED THE CONTRACT PRICE FOR THE GOODS FOR WHICH LIABILITY IS CLAIMED.

STAC Inc.

2785 Long Lake Rd. • St. Paul, MN 55113
800-334-7699 • 651-639-9605 Fax