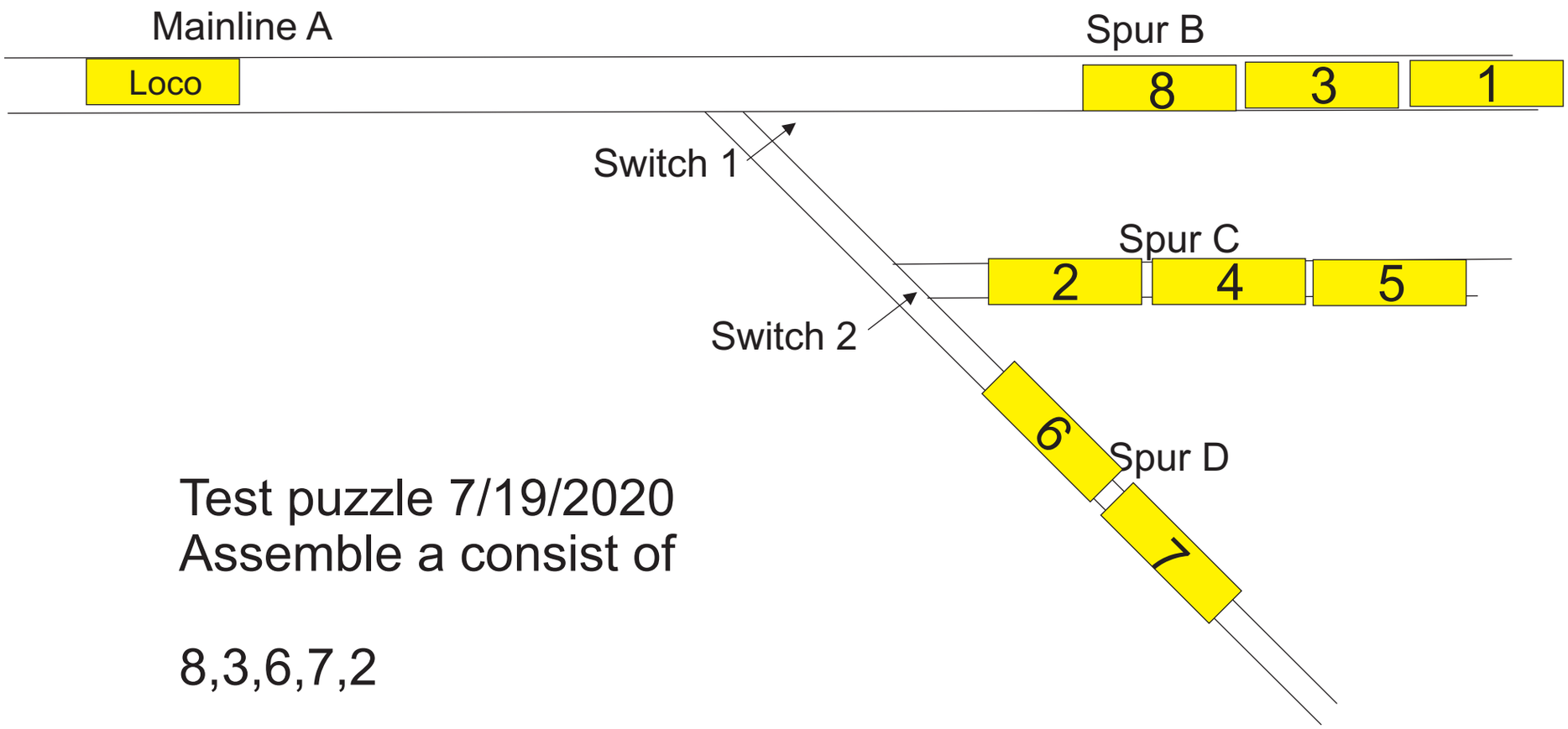

Test puzzle 7/19/2020
Assemble a consist of

8,3,6,7,2