WATSON WOODS SUBDIVISION

PARSONSFIELD, MAINE

APPLICATION

FOR

PRELIMINARY SUBDIVISION

SUBMITTED TO THE
TOWN OF PARSONSFIELD

May 22, 2018

Prepared By:

WALSH
ENGINEERING ASSOCIATES, INC.

WATSON WOODS SUBDIVISION

PARSONSFIELD, MAINE

Table of Contents

WALSH

ENGINEERING ASSOCIATES, INC.

File: 16149

May 22, 2018

Mr. David Bower, Code Enforcement Officer
Town of Parsonsfield
634 North Rd
Parsonsfield, ME 04047

RE: **PRELIMINARY REVIEW, WATSON WOODS**
ROUTE 160 (NORTH ROAD) / HUSSEY ROAD SUBDIVISION

Dear David,

We are pleased to submit the attached Sketch Plan for an 8-lot subdivision at the corner of Route 160, North Road and Hussey Road. This project is being developed by Nathan Wadsworth under Nate Sells Real Estate, LLC.

We have attached a Wetland Report and Soil Test Pit Logs with a Soils Report by Mark Hampton, SS, CSE. He has provided the technical data demonstrating that suitable soils are available on each lot for a septic system and a backup system. These will be coordinated with drilled wells for water supply. A well restriction zone has been included around each septic system.

The boundary survey by Maine Survey Consultants shows a parent lot of approximately 60 acres. The subdivision plan shows 8 lots being created, they average 2.46 acres in size, all are above the 2-acre minimum. The remaining 36.07 acres will be retained by the owner and is not included in the subdivision.

Attached are print outs from the U.S. Fish & Wildlife Service website detailing the rare and endangered species. It is noted that the long-eared bat is a concern. In dealings with the Army Corp, to protect these creatures, we have eliminated forestry practices in the months of June and July. This minimizes the possibility of disturbing a maturity tree where their young may be present. We have had the site reviewed by a biologist for the small whorled begonia. It is not present on this site.

We have a wetland complex that bisects the site. This wetland will remain undisturbed. Only one lot has wetlands on it and the wetland is at the rear of the lot out of the way of normal development. The building envelope has been modified to eliminate the wetland area.

This site is in the Watershed of Great Brook and the Ossipee River. It is not subject to phosphorus control standards. The extremely low density will minimize the stormwater impacts to downstream properties. A stormwater report is provided showing the peak flows.

We have talked to the Fire Chief to determine fire protection standards that we will use for the project. Attached is a letter from Chief Burbank stating that there is adequate fire protection in the area. Please note, all lots will be accessed from Route 160. We have MDOT entrance permits for all 8 locations.

We look forward to meeting with the Board and gaining a better understanding of the Town's concerns.

Respectfully,

Thomas S. Greer, P.E.
Walsh Engineering Associates, Inc.

cc: Nathan Wadsworth, Ralph Austin Esq., File

enc.

Appendix D

PARSONSFIELD PLANNING BOARD

SUBDIVISION APPROVAL APPLICATION FORM

APPLICANT INFORMATION

Name of Property Owner: NateSellsRealEstate, LLC

Address: PO Box 321
Cornish, ME 04020

Telephone: (207) 838 -7451

Name of Applicant: Same as Above

Address:

Telephone: (____)_____-_____

Name of applicant's authorized agent: Walsh Engineering Associates, Inc. (Thomas Greer P.E.)

Address: One Karen Drive, Suite 2A
Westbrook, ME 04092

Telephone: (207) 553 - 9898

Name of Land Surveyor, Engineer, Architect or others preparing plan:

Maine Survey Consultants , Inc.
Del Maxfield

Address: PO Box 485
Harrison, ME 04040

Telephone: (207) 583 -6159 Registration # 1177

Person and Address to which all correspondence regarding this application should be sent:

Walsh Engineering Associates, Inc. (Thomas Greer P.E.)
One Karen Drive, Suite 2A
Westbrook, ME 04092

What legal interest does the applicant have in the property to be developed?

☒ ownership ☐ option ☐ purchase and sales contract ☐ other _____

What interest does the applicant have in any abutting property? Ownership of remaining land

LAND INFORMATION

Location of Property (Street Location) Corner of Hussey Road and North Road (Rte 160)

(from County Registry of Deeds): Book 17309 Page 810

(from Tax Maps): Map R08 Lot(s) 37

Current zoning of property: Rural Residential Zone

Is any portion of the property within 250 feet of a great pond or river? Yes (No)

Is any portion of the property within the direct watershed of great pond? Yes (No)

If yes, which great pond? _____

Total Acreage of Parcel: 58.71 Acres

Acreage to be developed: 19.83 Acres

Indicate the nature of any restrictive covenants to be placed in the deeds:

None

Has this land been part of a prior approved subdivision? Yes (No)

Or other divisions within the past 5 years? (Yes) No

Identify existing use(s) of land (farmland, woodlot, etc.) Woodlot

Does the parcel include any waterbodies? Yes (No)

Does the parcel include any wetlands? (Yes) No

Is any portion of the property within a special flood hazard area as identified by the Federal Emergency Management Agency? Yes (No)

List below the names and mailing addresses of abutting property owners and owners across the road:

Name	Address
See Attached Abutters List	

GENERAL INFORMATION

Proposed name of development: Watson Woods

Number of lots or units: 8 Lots

Anticipated date for construction: No road construction is proposed.

Anticipated date of completion: Construction will commence as lots are sold. Complete when all lots are developed.

Does this development propose the extension of public infrastructure? Yes (No)

☐ roads ☐ storm drainage ☐ sidewalks ☐ fire protection equipment ☐ other

Estimated cost for infrastructure improvements $ 0.00

Identify method of water supply to the proposed development:

- [X] individual wells
- [ ] central well with distribution lines
- [ ] other, please state alternative _____

Identify method of sewage disposal to the proposed development:

- [X] individual septic tanks
- [ ] central on site disposal with distribution lines
- [ ] other, please state alternative _____

Identify method of fire protection for the proposed development:

- [ ] dry hydrants located on an existing pond or water body
- [ ] existing fire pond
- [X] other, please state alternative. See letter from Chief Burbank.

Does the applicant propose to dedicate to the public any streets, recreation or common lands?

street(s)	Yes	No	Estimated Length	_____
recreation area(s)	Yes	No	Estimated Acreage	_____
common land(s)	Yes	No	Estimated Acreage	_____

Does the applicant intend to request waivers of any of the subdivision submission requirements?

Yes No

If yes, list them and state reasons for the request.

_____

To the best of my knowledge, all the above stated information submitted in this application is correct.

Thomas D. [illegible] 5/22/18

(signature of Agent) (date)

Name1	Number	Road	Map Lot	Address1	Address2	Town	State	Zip	Name2
FARRINGTON, DONALD B	890	NORTH RD	R08-020	PO BOX 41		PARSONSFIELD	ME	04047	
MELLEN, STEVEN M	902	NORTH RD	R08-020-001		BOX 105	EAST PARSONSFIELD	ME	04028	MELLEN, CYNTHIA L
WHITE, BRADFORD G.	189	HUSSEY RD	R08-021	WHITE, R. A. AND B. A.	189 HUSSEY ROAD	PARSONSFIELD	ME	04047	WHITE, BARBARA A.
NORTON, KAREN		HUSSEY RD	R08-021-001		176 CARLSON STREET	WESTBROOK	ME	04092	EWING, CHARLES
RMB VENTURES LLC	253	HUSSEY RD	R08-021-A	298 CHESTER TURNPIKE		CANDLIA	NH	03034	
DAVIS HEIRS OF, LLOYD D	273	HUSSEY RD	R08-021-A-001	13218 WYE LANDING LA		WYE MILLS	MD	21679	C/O JENETTE MAGGIO
DAY, PHILIP THEODORE	221	HUSSEY RD	R08-021-A-002		PO BOX 121	PORTER	ME	04068	
GOULD, DANA L & DARLA J.	197	HUSSEY RD	R08-021-A-003	197 HUSSEY RD		PARSONSFIELD	ME	04047	
HENNESSEY, DANIEL F. & DOREEN A.	267	HUSSEY RD	R08-021-A-004	267 HUSSEY ROAD		PARSONSFIELD	ME	04047	
MATHEWS, K & E REALTY TRUST	156	HUSSEY RD	R08-022		7 PARK AVENUE	WAKEFIELD	MA	01880	
FROST, DONALD E	157	HUSSEY RD	R08-022-001	157 HUSSEY RD		PARSONSFIELD	ME	04047	ESTES, CIARAN M
NICKERSON, PETER R	173	HUSSEY RD	R08-022-002		38 NAVASOTA AVE	WORCESTER	MA	01602	NICKERSON, RUTH E
WHITE, WILLIAM R	170	HUSSEY RD	R08-022-003	170 HUSSEY RD		PARSONSFIELD	ME	04047	
SARGENT, KEITH A.	1038	NORTH RD	R08-035		942 PLYMOUTH ST	ABINGTON	MA	02351	AHLQUIST, MAIJA K.
PERKINS, BRIAN	1011	NORTH RD	R12-009	1011 NORTH RD		PARSONSFIELD	ME	04047	PERKINS, MARTHA
GARNETT RAYMOND TRUSTEE OF THE	993	NORTH RD	R12-009-001	1248 PORTLAND ROAD		ARUNDEL	ME	04046	993 NORTH ROAD REALTY TRUST
FARRINGTON, DONALD B		NORTH RD	R12-010	PO BOX 41		PARSONSFIELD	ME	04047	
EMC HOLDING, LLC		MERRILL HILL RD	R12-021	7 MASONS ISLAND ROAD SUIIT E		MYSTIC	CT	06355	
LEAVITT, JOSEPH R.		NORTH RD	R12-021-A		41 FALL RIDGE ROAD	WINDHAM	ME	04062	HEGARTY, COLETTE A.

Nate Sells Real Estate, LLC
P.O. Box 321
Cornish, ME 04020
(207) 838-7451

April 26, 2018

To whom it may concern:

This letter is to inform you that Thomas S. Greer, P.E. of Walsh Engineering Associates, Inc. (or any of his associates in that firm) and Ralph W. Austin, Esq. of Woodman Edmands Danylik Austin Smith & Jacques, P.A. (or any of his associates in that firm) are hereby authorized to represent me and my company throughout the approval process for the proposed Watson Woods subdivision located on Route 160 (North Road) in Parsonsfield.

This includes representing me and my company with the Town of Parsonsfield Planning Board and other Town officials and with the State of Maine Department of Environmental Protection, as well as with any other State or local agencies or boards who may become involved in the approval process.

Should you have any questions or concerns, please feel free to contact me.

Sincerely,

Nathan Wadsworth

Nathan Wadsworth

Appendix O

PRELIMINARY PLAN APPLICATION CHECKLIST FOR MAJOR SUBDIVISIONS

Subdivision Name Watson Woods Date 4/18/17

This checklist has been prepared to assist applicants in developing their applications. It should be used as a guide in assembling the information necessary for a complete application. However, the checklist does not substitute for the requirements of Article 7 of the Subdivision Regulations (or Ordinance). The Planning Board also will be using the checklist to make sure that your application is complete. Indicate if the information has been submitted or if it is requested to be waived. If you feel that information is not applicable to your project, please indicate in the second column.

Note that this checklist only covers the submission requirements for a preliminary plan for major subdivision. It does not address the standards that the preliminary plan must meet. There are two other checklists which address the performance standards and the design guidelines which the applicant may find of assistance.

Shaded boxes indicate that the action is not recommended to be taken by the Applicant.

SUBDIVISION REGULATIONS		Submitted by Applicant	Not Applicable	Applicant Requests to be Waived	Received by Planning Board	Waived by Planning Board
7.2.A.	**Seven copies of application plus accompanying information**	X				
7.2.B.	**LOCATION MAP**					
B.1.	Existing subdivisions in the proximity of proposed subdivision	C1.2				
B.2.	Locations and names of existing and proposed streets	C1.2				
B.3.	Zoning boundaries and designations	C1.2				
B.4.	Outline of proposed subdivision and owner's remaining contiguous land	C1.2				
7.2.C.	**PRELIMINARY PLAN**					
C.	Three copies of all maps and/or drawings printed or reproduced on paper					
C.	Scale not smaller than 1"= 100'; for subdivision more than 100 acres, not smaller than 1"= 200'	C1.1				
C.	Copies of the plans and drawings on 8.5" x 11" or 11" x 17" sheets plus all accompanying information for each Board member					
7.2.D.	**INFORMATION**					
D.1.	Name of subdivision, name of town and assessor's Map and Lot Number(s)	C1.1				
D.2.	Verification of right, title or interest in property	Deed				
D.3.	Standard boundary survey	C1.1				
D.4.	Copy of most recently recorded deed; all restrictions, easements, rights-of-way and other encumbrances	Deed				
D.5.	Deed restrictions on proposed new lots or dwellings	X				
D.6.	Type of sewage proposed	C1.1				
D.6.	Test pit analyses by Site Evaluator and test sites location map	C1.4				
D.7.	Type of water supply system(s)	C1.1				
SUBDIVISION REGULATIONS		Submitted		Applicant	Received by	Waived by

		by Applicant	Not Applicable	Requests to be Waived	Planning Board	Planning Board
D.7.	Water Company letter of capacity		X			
D.8.	Date plan prepared, north point and graphic map scale	X				
D.9.	Names and addresses of record owner, subdivider, plan preparer(s) and adjoining property owners	X				
D.10.	High intensity soil survey by Soil Scientist; all wetlands identified	C1.4				
D.11.	Total acres in subdivision; location of property lines, existing building(s), vegetative cover type and other essential physical features	C1.1				
D.11.	Location of trees more than 24" in diameter	C1.1				
D.11.	On wooded sites, clearings for lawns and structures	X				
D.12.	All rivers, streams and brooks within and adjacent to subdivision	C1.1				
D.13.	Topographic contour lines specified by Planning Board	C1.4, C1.3				
D.14.	Zoning District(s) and boundaries	C1.2				
D.15.	Location and size of existing and proposed sewers, water mains, culverts and drainageways on and adjacent to subdivision	C1.1				
D.16.	Location, name and widths of existing streets and highways	C1.1				
D.16.	Location, name and widths of existing and proposed easements, building lines, parks and open spaces on or adjacent to subdivision	C1.1				
D.17.	Location and dimensions of streets, public improvements and open space in subdivision as shown on the Official Map and the Comprehensive Plan	C1.1				
D.18.	Proposed lot lines, approximate dimensions and lot areas	C1.1				
D.19.	Parcels of land proposed to be dedicated to public use; condition of such dedication		X			
D.20.	Open space to be preserved; proposed ownership, improvements, management		X			
D.21.	Area of each lot permitting forest clearing and lawn planting	X				
D.22.	100-year flood elevations	X				
D.23.	Hydrogeologic assessment if subdivision not served by public sewer AND any part of subdivision is over a sand and gravel aquifer, OR average density is more than one dwelling unit per 100,000 sq. ft.		X			
D.23.	Hydrogeologic assessment if Board determines potential adverse impacts on ground water quality. Conduct assessment per Article 11.12.A.1		X			
D.24.	Vehicular trip generation rates	X				
D.25.	High or moderate value wildlife habitat within or adjacent to the subdivision	X				
D.26.	If the proposed subdivision is within the direct watershed of a great pond AND it qualifies, then the simplified phosphorus control review procedure is required, including a long term maintenance program for phosphorus control. See Article 11.11.A.2		X			
7.2.D	**ADDITIONAL INFORMATION**					
	Planning Board may require additional information where it is determined necessary by the Board to meet criteria of the State Subdivision Statute Title 30-A M.R.S.A., ¤4404.					

Review of Major Subdivision by:_____

Application Form and required documents	AGREE	DISAGREE

Location Map shall contain:

Existing subdivisions in the proximity of the proposed subdivision. Locations and names of existing and proposed streets. Boundaries and designations of zoning districts.	C1.2	
An outline of the proposed subdivision and any remaining portion of the owner's property if the preliminary plan submitted covers only a portion of the owner's entire contiguous holding.	C1.1	

Application shall contain:

Proposed name of the subdivision	X	
Verification of right, title or interest in the property.	DEED	
A standard boundary survey of the parcel		
A copy of the most recently recorded deed for the parcel.	X	
A copy of any deed restrictions intended to cover all or part of the lots or dwellings in the subdivision.	NA	
An indication of the type of sewage disposal to be used in the subdivision. When sewage disposal is to be accomplished by subsurface wastewater disposal systems, test pit analyses, prepared by a Licensed Site Evaluator or Certified Soil Scientist shall be provided. A map showing the location of all test pits dug on the site shall be submitted.	C1.4	
An indication of the type of water supply system(s) to be used in the subdivision.	C1.1	
The date the plan was prepared, north point, and graphic map scale.	X	
The names and addresses of the record owner, applicant, and individual or company who prepared the plan and adjoining property owners.	X	
A high intensity soil survey by a Certified Soil Scientist. Wetland areas shall be identified on the survey, regardless of size.	C1.4	
The number of acres within the proposed subdivision, location of property lines, existing buildings, vegetative cover type, and other essential existing physical features. The location of any trees larger than 24 inches in diameter at breast height shall be shown on the plan.	C1.1	

The location of all rivers, streams and brooks within or adjacent to the proposed subdivision. If any portion of the proposed subdivision is located in the direct watershed of a great pond, the application shall indicate which great pond.	C1.1	
Contour lines at the interval specified by the Board, showing elevations in relation to Mean Sea Level.	C1.3, C1.4 2' CTRS	
The zoning district in which the proposed subdivision is located and the location of any zoning boundaries affecting the subdivision.	C1.2	
The location and size of existing and proposed sewers, water mains, culverts, and drainage ways on or adjacent to the property to be subdivided.	C1.1 D1.0	
The location, names, and present widths of existing streets, highways, easements, building lines, parks and other open spaces on or adjacent to the subdivision.	C1.1	
The width and location of any streets, public improvements or open space shown upon the official map and the comprehensive plan, if any, within the subdivision.	NA	
The proposed lot lines with approximate dimensions and lot areas.	C1.1	
All parcels of land proposed to be dedicated to public use and the conditions of such dedication.	NA	
The location of any open space to be preserved and a description of proposed ownership, improvement and management.	NA	
The area on each lot where existing forest cover will be permitted to be removed and converted to lawn, structures or other cover and any proposed restrictions to be placed on clearing existing vegetation.	C1.1	
If any portion of the subdivision is in a flood-prone area, the boundaries of any flood hazard areas and the 100-year flood elevation, as depicted on the municipality's Flood Insurance Rate Map, shall be delineated on the plan.	NA	
A hydro geologic assessment prepared by a Certified Geologist or Registered Professional Engineer, experienced in hydrogeology, when the subdivision is not served by public sewer and any part of the subdivision is located over a sand and gravel aquifer, as shown on a map entitled "Hydrogeologic Data for Significant Sand and Gravel Aquifers," by the Maine Geological Survey, 1985, Map No. ___; or The subdivision has an average density of more than one dwelling unit per 100,000 square feet.	NA	

An estimate of the amount and type of vehicular traffic to be generated on a daily basis and at peak hours. Trip generation rates used shall be taken from Trip Generation Manual, 1991 edition, published by the Institute of Transportation Engineers.	TRAFFIC LETTER	
For subdivisions involving 40 or more parking spaces or projected to generate more than 400 vehicle trips per day, a traffic impact analysis, prepared by a Registered Professional Engineer with experience in traffic engineering, shall be submitted.	NA	
Areas within or adjacent to the proposed subdivision which have been identified as high or moderate value wildlife habitat by the Maine Department of Inland Fisheries and Wildlife or within the comprehensive plan.	NA	
If the proposed subdivision is in the direct watershed of a great pond, and qualifies for the simplified review procedure for phosphorus control, the plan shall indicate the location and dimensions of vegetative buffer strips or infiltration systems and the application shall include a long-term maintenance plan for all phosphorus control measures.	NA	

BK 17309 PGS 810 - 811
INSTR # 2016037151
RECEIVED YORK SS

08/30/2016 11:45:32 AM
DEBRA ANDERSON
REGISTER OF DEEDS

QUITCLAIM DEED WITH COVENANT

That **Thomas W. Watson**, whose mailing address is 59 Field Road, Harpswell, Maine 04079

For Consideration Paid, GRANTS with QUITCLAIM COVENANT to:

NateSellsRealEstate, LLC, a Maine Limited Liability Company with a principal place of business in the Town of Hiram, County of York and State of Maine, and a mailing address of P.O. Box 321, Cornish, ME 04020

A certain lot or parcel of land situated in said Parsonsfield, County of York and State of Maine, on the North side of the Road leading from North Parsonsfield to East Parsonsfield and bounded as follows:

Beginning at the Southeast corner of said lot of land now or formerly of Hardy Merrill as the Southwest corner of the orchard near the dwelling house now or formerly of George F. Chapman; thence running Westerly by said road to the Wentworth Road so-called; thence Northeasterly by said Wentworth Road to land now or formerly of James M. Elliott; thence Southerly and Easterly by said Elliott's land to land now or formerly of Hardy Merrill; thence Southerly by said Merrill's land to the Northeast corner of the field of said Merrill; thence Westerly and Southerly by said Merrill's field and the orchard first mentioned to the point begun at, containing seventy-five (75) acres, more or less.

Being the same premises conveyed to Grantor herein by deed of Sidney W. Watson dated March 12, 1979 and recorded in the York County Registry of Deeds in Book 2485, Page 96.

WITNESS my hand this 26 day of August, 2016.

Thomas W. Watson

Thomas W. Watson

Maine R.E. Transfer Tax Paid

2p → S&W Assoc Cumberland ME 04021

(3)

STATE OF MAINE

CUMBERLAND, SS. Date: August 26, 2016

Then personally appeared the above-named Thomas W. Watson acknowledged the foregoing instrument to be his free act and deed.

Before me,

Darcy L. Needham

~~Attorney at Law~~/Notary Public

Commission Expires:

DARCY L. NEEDHAM
NOTARY PUBLIC - State of Maine
My Commission Expires
January 26, 2023

After recording return to:
Heritage Law, PLLC
P.O. Box 338
Cornish, ME 04020

QUITCLAIM DEED

KNOW ALL PERSONS BY THESE PRESENTS, That **NateSellsRealEstate, LLC,** a Maine Limited Liability Company with a principal place of business in the Town of Hiram, County of York and State of Maine, with a mailing address of 29 Rock Crop Drive, Hiram, for consideration paid grants to **Keith A. Sargent and Maija K. Ahlquist**, both of 942 Plymouth Street, Arlington, Massachusetts 02351, as joint tenants with QUITCLAIM COVENANTS, the following:

A certain lot or parcel of land situated on the northerly side of the North Road, in the Town of Parsonsfield, County of York, Maine. Said parcel is a portion of the premises conveyed to this grantor as described in York County Registry of Deeds book 17309, page 810. All interest to a parcel of land situated easterly of the following described line:

Beginning at a point in a stonewall on the northerly side of the North Road. Said point being situated on the apparent northerly sideline of said North Road at the southwesterly corner of land of the Grantee as described in York County Registry of Deeds book 15786, page 263;

THENCE, North 21 degrees 02 minutes 06 seconds East, a distance of 387.87 feet along said stonewall and land of the grantee to a point;

THENCE, North 17 degrees 12 minutes 40 seconds East, a distance of 558.52 feet along said stonewall and land of the grantee to a stonewall intersection at land of the grantor;

THENCE, North 15 degrees 26 minutes 32 seconds East, a distance of 329.78 feet along said stonewall abutting a 6.5 acre parcel of land encompassed by stonewall and owned by the grantor as shown on a Standard Boundary Survey of a Portion of lands of Ruth Sargent dated November 26, 1996 surveyed by Metcalf Land Surveying, Inc. to an iron rod with cap #2055 found in a stonewall intersection at land of these grantees;

THENCE, North 09 degrees 44 minutes 08 seconds East, a distance of 96.87 feet along said stonewall and land of the grantee to a point;

THENCE, North 10 degrees 38 minutes 32 seconds East, a distance of 276.11 feet along said stonewall and land of the grantee to a point;

THENCE, North 11 degrees 56 minutes 40 seconds East, a distance of 362.93 feet to an iron rod with cap #2081 found at the southwesterly corner of land now or formerly of William White as described in York County Registry of Deeds book 9030, page 184.

The bearings herein used are referenced to Magnetic North observed in 1991.

The courses and distances used are derived from a Standard Boundary Survey of a Portion of lands of Ruth Sargent dated November 26, 1996, surveyed by Metcalf Land Surveying, Inc.

The above referenced plan recommended a boundary line agreement pertaining to a portion of the said above described line due to ambiguous deed descriptions between land of this Grantor and these Grantees. The intent herein is to release any interest the Grantor has in the 6.5 acre parcel shown on that plan as being owned by Heirs of Sidney W. Watson and to confirm the stonewall described above as the common boundary between remaining land of the Grantor and the Grantees.

Said parcel is a portion of the premises conveyed to NatesSellsRealEstate, LLC as described in York County Registry of Deeds Book 17309, Page 810 by Quitclaim Deed of Thomas W. Watson dated August 26, 2016, and recorded in the York County Registry of Deeds at Book 17309, Page 810."

EXECUTED THIS 26th day of May, 2017.

Nathan Wadsworth

STATE OF MAINE
COUNTY OF YORK

May 26th, **2017**

Personally appeared the above named Nathan Wadsworth, President of NateSellsRealEstate, LLC and acknowledged the foregoing instrument to be his free act and deed acting in said capacity.

Before me,

KATIE E. DESHAIES NOTARY PUBLIC MAINE

Katie E. Deshaies
Notary Public

KATIE E. DESHAIES
Notary Public, Maine
My Commission Expires 4/20/24

Kezar Falls Fire Department

Kezar Falls, Maine

BUSINESS MEETING FIRST THURSDAY IN EACH MONTH

To whom it may concern,

Ref. The subdivision in Parsonsfield off the Hussey

The Dry Hydrants that are in the close area are adequate to handle any fires in the area;

The first one is at Perry Pond intersection of Elm and Pendexter,

The second one is about ½ mile down on Pendexter road just after orchard road

Kezar Falls Fire Department

Kenneth A. Burbank

Chief Kenneth A. Burbank

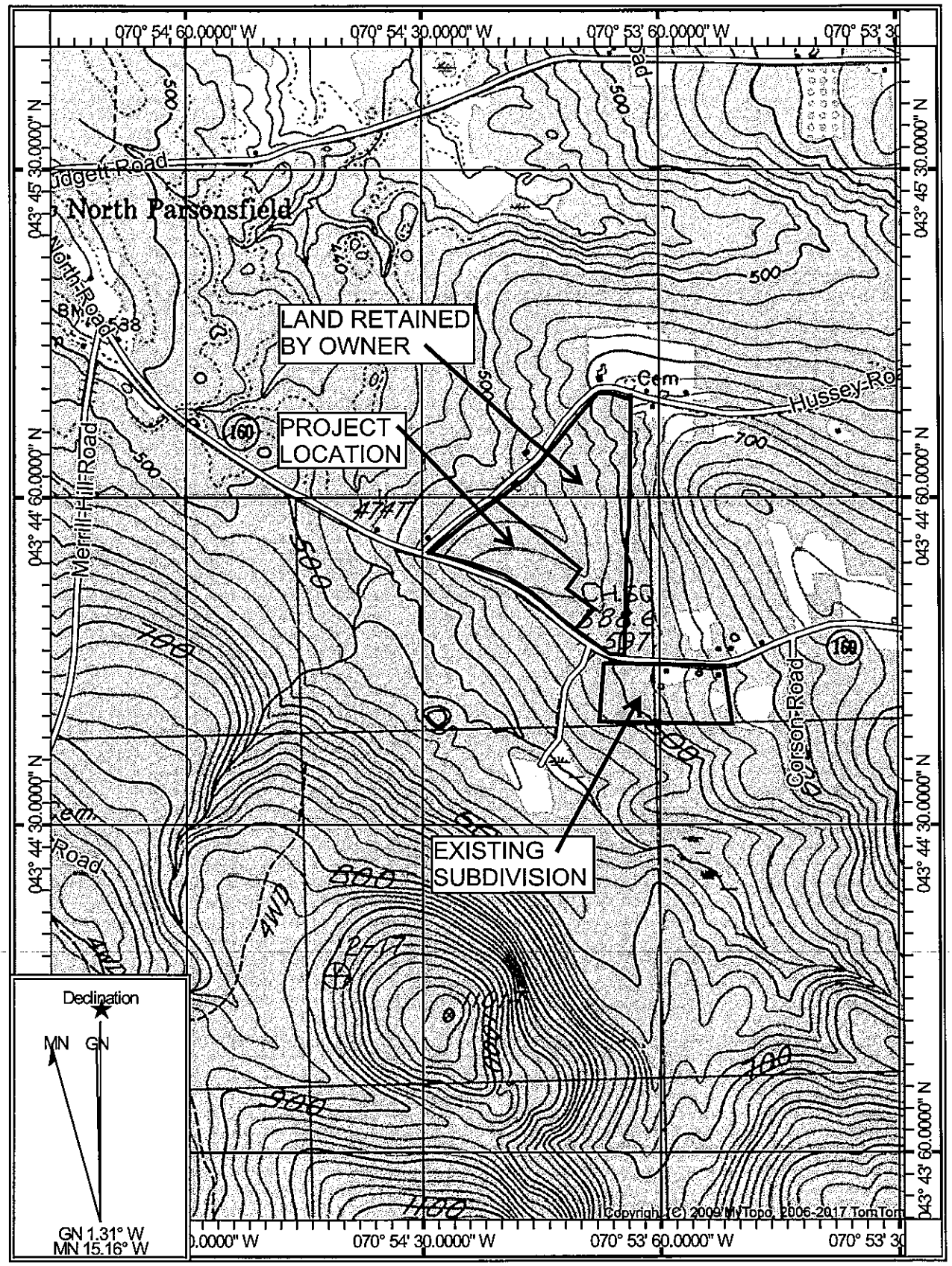

SCALE 1:16000

0 1000 2000 3000 4000

Feet

16149-Parsonsfield Subdivision
4/18/18

WALSH

ENGINEERING ASSOCIATES, INC.

File: 16149

April 19, 2018

Mr. David Bower, Code Enforcement Officer
Town of Parsonsfield
634 North Rd
Parsonsfield, ME 04047

RE: **Watson Woods, Parsonsfield, Maine - Traffic**
Reference: **Article 7.2D.24 of the Subdivision Regulations of the Town of Parsonsfield, Maine**

Dear David,

The Institute of Transportation Engineers (ITE) Trip Generation (6th Edition) predicts that each single family detached residence, land use code 210, will generate 9.57 vehicle trips per weekday, 0.77 vehicle trips in the AM peak hour and 1.02 vehicle trips in the PM peak hour. At 9.57 trips per lot, eight single-family residential lots will generate 77 trips per weekday, 6 trips in the peak AM hour and 8 trips in the peak PM hour. On a Saturday the manual lists the average vehicle trip ends vs dwelling units at 10.09 for a total of 81 and peak hour average vehicle trip ends at .94 per dwelling unit for a total of 8 trip ends in the peak hour.

Traffic typically will consist of passenger cars and pickup trucks for the most part and will include occasional delivery vehicles such as those used to deliver fuel oil, packages, school age children, and building materials.

Respectfully,

STATE OF MAINE
THOMAS S. GREER
No. 4206
LICENSED
PROFESSIONAL ENGINEER

Thomas S. Greer P.E.
Walsh Engineering Associates, Inc.

cc. Nathan Wadsworth, Ralph Austin Esq., File

enc.

MARK HAMPTON ASSOCIATES, INC.

SOIL EVALUATION • WETLAND DELINEATIONS • SOIL SURVEYS • WETLAND PERMITTING

4643

Watson Woods
Nathan Wadsworth
Parsonsfield, ME

Soil Narrative Report

DATE:	Soil Profiles observed on July 19, 2017 and August 21, 2017
BASE MAP:	Base plan provided by Walsh Engineering Associates, Inc. scale 1 inch equals 100 feet and two foot contours.
GROUND CONTROL:	Soil survey boundaries located by Mark Hampton Associates, Inc. for Class A Soil Survey in developed portion and Class C in undeveloped portion of project parcel.

Class A-High Intensity Soil Survey (Minimum Standards) Developed Portion of Project

Mapping units of 1/8 acre or less.
Scale of 1"= 100 feet or larger.
Up to 25% inclusions in mapping units of which no more than 15% may be dissimilar soils.
Ground Control –base line and test pits accurately located under the direction of a registered land surveyor or qualified engineer.
Base Map –2 foot contours with ground survey, or aerial survey with ground control

Provided:

Mapping units of 1/8 acre or less
Base map scale of 1"= 100 feet.
Up to 25 percent inclusions in mapping units of which no more than 15 percent is dissimilar soils.
Baseline information and test pits located by Mark Hampton Associates, Inc. under direction of Maine Survey Consultants, Inc.
Topographic survey with two foot contours and ground control provided.

P.O. BOX 1931 • PORTLAND, ME 04104-1931 • 207-756-2900 • mhampto1@maine.rr.com

Class C-Medium Intensity Soil Survey (Minimum Standards) Undeveloped portion of project

Mapping units of 3 acre or less.
Scale of 1"= 500 feet or larger.
Up to 25% inclusions in mapping units of which no more than 15% may be dissimilar soils.
Ground Control –as determined by mapper
Base Map –as determined by mapper

Provided:

Mapping units of 3 acre or less
Base map scale of 1"= 100 feet.
Up to 25 percent inclusions in mapping units of which no more than 15 percent is dissimilar soils.
Baseline information and test pits located by Mark Hampton Associates, Inc. under direction of Maine Survey Consultants, Inc.
Topographic survey with two foot contours.

The accompanying soil profile descriptions, soil map, and this soil narrative report were done in accordance with the standards adopted by the Maine Association of Professional Soil Scientists, and the Maine Board of Certification of Geologists and Soil Scientists.

Mark J. Hampton C.S.S. #216, L.S.E. #263 April 26, 2018
Mark J. Hampton Date

4643

PAGE ____ OF ____

FORM F Rev. 07/11

SOIL PROFILE / CLASSIFICATION INFORMATION

DETAILED DESCRIPTION OF SUBSURFACE CONDITIONS AT PROJECT SITES

Project Name: Watson Woods

Applicant Name: Nathan Wadsworth

Project Location (municipality): Parsippany

Exploration Symbol # SS1

■ Test Pit ☐ Boring ☐ Probe

____ " Organic horizon thickness Ground surface elev. ____

____ " Depth of exploration or to refusal

Depth below mineral soil surface (inches)	Texture	Consistency	Color	Redox Features
0	[illegible]	[illegible]	[illegible]	
10	[illegible]	[illegible]	[illegible]	[illegible]
20				[illegible]
30	[illegible]	[illegible]	[illegible]	
40				
50				
60				

Soil Details by S.E. ▸▸ / S.S. ▸▸

Soil Classification		Slope	Limiting Factor	
4	3	12	—	☐ Groundwater ☐ Restrictive Layer ☐ Bedrock
Profile	Condition	Percent	Depth	

Soil Series/Phase Name: Becket WD

☐ Hydric ■ Non-hydric

Hydrologic Soil Group: ____

Exploration Symbol # SS2

■ Test Pit ☐ Boring ☐ Probe

____ " Organic horizon thickness Ground surface elev. ____

____ " Depth of exploration or to refusal

Depth below mineral soil surface (inches)	Texture	Consistency	Color	Redox Features
0	[illegible]	[illegible]	[illegible]	
10	[illegible]	[illegible]	[illegible]	
20				[illegible]
30	[illegible]	[illegible]	[illegible]	
40				
50				
60				

Soil Details by S.E. ▸▸ / S.S. ▸▸

Soil Classification		Slope	Limiting Factor	
4	3	20	—	☐ Groundwater ☐ Restrictive Layer ☐ Bedrock
Profile	Condition	Percent	Depth	

Soil Series/Phase Name: Becket WD

☐ Hydric ■ Non-hydric

Hydrologic Soil Group: ____

Exploration Symbol # SS3

■ Test Pit ☐ Boring ☐ Probe

____ " Organic horizon thickness Ground surface elev. ____

____ " Depth of exploration or to refusal

Depth below mineral soil surface (inches)	Texture	Consistency	Color	Redox Features
0	[illegible]	[illegible]	[illegible]	
10	[illegible]	[illegible]	[illegible]	
20	[illegible]	[illegible]	[illegible]	Common [illegible]
30	[illegible]			
40				
50				
60				

Soil Details by S.E. ▸▸ / S.S. ▸▸

Soil Classification		Slope	Limiting Factor	
3	C	6	16	☐ Groundwater ■ Restrictive Layer ☐ Bedrock
Profile	Condition	Percent	Depth	

Soil Series/Phase Name: Skerry MWD

☐ Hydric ■ Non-hydric

Hydrologic Soil Group: ____

Exploration Symbol # SS4

■ Test Pit ☐ Boring ☐ Probe

____ " Organic horizon thickness Ground surface elev. ____

____ " Depth of exploration or to refusal

Depth below mineral soil surface (inches)	Texture	Consistency	Color	Redox Features
0	[illegible]	[illegible]	[illegible]	
10	[illegible]	[illegible]	[illegible]	
20	[illegible]	[illegible]	[illegible]	[illegible]
30				
40				
50				
60				

Soil Details by S.E. ▸▸ / S.S. ▸▸

Soil Classification		Slope	Limiting Factor	
3	C	10	13	■ Groundwater ☐ Restrictive Layer ☐ Bedrock
Profile	Condition	Percent	Depth	

Soil Series/Phase Name: Skerry MWD

☐ Hydric ☐ Non-hydric

Hydrologic Soil Group: ____

STATE OF NEW JERSEY MARK J. HAMPTON #216 CERTIFIED SOIL SCIENTIST

INVESTIGATOR INFORMATION AND SIGNATURE

Signature: Mark J. Hampton Date: 7/20/17

Name Printed: Mark J. Hampton Cert/Lic/Reg. #: 2135216

Title: ■ Licensed Site Evaluator ■ Certified Soil Scientist ☐ Certified Geologist ☐ Professional Engineer

PAGE ____ OF ____

4643

FORM F Rev. 07/11

SOIL PROFILE / CLASSIFICATION INFORMATION

DETAILED DESCRIPTION OF SUBSURFACE CONDITIONS AT PROJECT SITES

Project Name: Watson Woods

Applicant Name: Nathan Wadsworth

Project Location (municipality): Porsonsfield

Exploration Symbol # SS5 ☒ Test Pit ☐ Boring ☐ Probe

____ " Organic horizon thickness Ground surface elev. ____

____ " Depth of exploration or to refusal

Depth below mineral soil surface (inches)	Texture	Consistency	Color	Redox Features
0	Sandy loam	Friable	Brown	
10	Sandy loam	Firm	Gray	Common
20				
30				
40				
50				
60				

Soil Details by S.E. »: Soil Classification: Profile 3, Condition C; Slope: Percent 6; Limiting Factor: Depth 6 " ☒ Groundwater ☒ Restrictive Layer ☐ Bedrock

Soil Details by S.S. »: Soil Series/Phase Name: Brayton PD ■ Hydric ☐ Non-hydric; Hydrologic Soil Group

Exploration Symbol # SS6 ☒ Test Pit ☐ Boring ☐ Probe

____ " Organic horizon thickness Ground surface elev. ____

____ " Depth of exploration or to refusal

Depth below mineral soil surface (inches)	Texture	Consistency	Color	Redox Features
0	Sandy loam	Friable	Brown	
10	Sandy loam	Firm	Gray	Common
20				
30				
40				
50				
60				

Soil Details by S.E. »: Soil Classification: Profile 3, Condition E; Slope: Percent 6; Limiting Factor: Depth 6 " ☒ Groundwater ☒ Restrictive Layer ☐ Bedrock

Soil Details by S.S. »: Soil Series/Phase Name: Brayton PD ■ Hydric ☐ Non-hydric; Hydrologic Soil Group

Exploration Symbol # SS7 ☒ Test Pit ☐ Boring ☐ Probe

____ " Organic horizon thickness Ground surface elev. ____

____ " Depth of exploration or to refusal

Depth below mineral soil surface (inches)	Texture	Consistency	Color	Redox Features
0	Sandy loam	Friable	Dark Brown	
10	Sandy loam	Friable	Gray	
20	Sandy loam	Firm	Gray	Common
30	Stony			
40				
50				
60				

Soil Details by S.E. »: Soil Classification: Profile 3, Condition C; Slope: Percent 10; Limiting Factor: Depth 16 " ☒ Groundwater ☒ Restrictive Layer ☐ Bedrock

Soil Details by S.S. »: Soil Series/Phase Name: Skerry MWT ☐ Hydric ☒ Non-hydric; Hydrologic Soil Group

Exploration Symbol # SS8 ☒ Test Pit ☐ Boring ☐ Probe

____ " Organic horizon thickness Ground surface elev. ____

____ " Depth of exploration or to refusal

Depth below mineral soil surface (inches)	Texture	Consistency	Color	Redox Features
0	Sandy loam	Friable	Dark Brown	
10	Sandy loam	Friable	Gray	
20	Sandy loam	Firm	Gray	Dark Mottles
30	Stony			
40				
50				
60				

Soil Details by S.E. »: Soil Classification: Profile 4, Condition B; Slope: Percent 8; Limiting Factor: Depth — ☒ Groundwater ☐ Restrictive Layer ☐ Bedrock

Soil Details by S.S. »: Soil Series/Phase Name: ☐ Hydric ☒ Non-hydric; Hydrologic Soil Group

INVESTIGATOR INFORMATION AND SIGNATURE

Signature: Mark J. Hampton

Date: 7/29/17

Name Printed: Mark J. Hampton

Cert/Lic/Reg. #: SS-1216

Title: ☒ Licensed Site Evaluator ☒ Certified Soil Scientist ☐ Certified Geologist ☐ Professional Engineer

STATE OF MAINE MARK J. HAMPTON #216 CERTIFIED SOIL SCIENTIST

4643

FORM F Rev. 07/11

SOIL PROFILE / CLASSIFICATION INFORMATION

DETAILED DESCRIPTION OF SUBSURFACE CONDITIONS AT PROJECT SITES

Project Name: Watson Woods

Applicant Name: Nathan Wadsworth

Project Location (municipality): Pittsfield

Exploration Symbol # SS9

☒ Test Pit ☐ Boring ☐ Probe

____ " Organic horizon thickness Ground surface elev. ____

____ " Depth of exploration or to refusal

Depth below mineral soil surface (inches)	Texture	Consistency	Color	Redox Features
0	Sandy loam	Friable	Black	
10	Sandy loam	Firm	Gray	common
20				distinct
30				
40				
50				
60				

Soil Details by S.E. ▸▸ / S.S. ▸▸

Soil Classification		Slope	Limiting Factor	
3	C	0	60 "	☒ Groundwater ☒ Restrictive Layer ☐ Bedrock
Profile	Condition	Percent	Depth	

Soil Series/Phase Name: Brayton

☒ Hydric ☐ Non-hydric

Hydrologic Soil Group

Exploration Symbol # SS10

☒ Test Pit ☐ Boring ☐ Probe

____ " Organic horizon thickness Ground surface elev. ____

____ " Depth of exploration or to refusal

Depth below mineral soil surface (inches)	Texture	Consistency	Color	Redox Features
0	Sandy loam	Friable	Dark Brown	
10	Sandy loam	Friable	Brown	
20				common
30	Sandy loam	Firm	White	distinct
40				
50				
60				

Soil Details by S.E. ▸▸ / S.S. ▸▸

Soil Classification		Slope	Limiting Factor	
3	C	0	60 "	☒ Groundwater ☒ Restrictive Layer ☐ Bedrock
Profile	Condition	Percent	Depth	

Soil Series/Phase Name: Skerry Mud

☐ Hydric ☒ Non-hydric

Hydrologic Soil Group

Exploration Symbol # SS11

☒ Test Pit ☐ Boring ☐ Probe

____ " Organic horizon thickness Ground surface elev. ____

____ " Depth of exploration or to refusal

Depth below mineral soil surface (inches)	Texture	Consistency	Color	Redox Features
0	Sandy loam	Friable	Dark Brown	
10	Sandy loam	Friable	Brown	
20	Sandy loam	Firm	White	common
30				distinct
40				
50				
60				

Soil Details by S.E. ▸▸ / S.S. ▸▸

Soil Classification		Slope	Limiting Factor	
3	C	10	60 "	☒ Groundwater ☒ Restrictive Layer ☐ Bedrock
Profile	Condition	Percent	Depth	

Soil Series/Phase Name: Skerry Mud

☐ Hydric ☒ Non-hydric

Hydrologic Soil Group

Exploration Symbol # SS12

☒ Test Pit ☐ Boring ☐ Probe

____ " Organic horizon thickness Ground surface elev. ____

____ " Depth of exploration or to refusal

Depth below mineral soil surface (inches)	Texture	Consistency	Color	Redox Features
0	Sandy loam	Friable	Dark Brown	
10	Sandy loam	Friable	Brown	
20	Sandy loam	Firm	White	common
30				distinct
40				
50				
60				

Soil Details by S.E. ▸▸ / S.S. ▸▸

Soil Classification		Slope	Limiting Factor	
3	C	0	60 "	☒ Groundwater ☒ Restrictive Layer ☐ Bedrock
Profile	Condition	Percent	Depth	

Soil Series/Phase Name: Skerry Mud

☐ Hydric ☒ Non-hydric

Hydrologic Soil Group

STATE OF MAINE
MARK J. HAMPTON
#216
CERTIFIED SOIL SCIENTIST

INVESTIGATOR INFORMATION AND SIGNATURE

Signature: Mark J. Hampton

Date: 7/29/17

Name Printed: Mark J. Hampton

Cert/Lic/Reg. #: 2012216

Title: ☒ Licensed Site Evaluator ☒ Certified Soil Scientist ☐ Certified Geologist ☐ Professional Engineer

PAGE ___ OF ___

4643

FORM F Rev. 07/11

SOIL PROFILE / CLASSIFICATION INFORMATION

DETAILED DESCRIPTION OF SUBSURFACE CONDITIONS AT PROJECT SITES

Project Name: Westsin Woods

Applicant Name: Nathan Wadsworth

Project Location (municipality): Pewaukee

Exploration Symbol # 5515

☒ Test Pit ☐ Boring ☐ Probe

_____ " Organic horizon thickness Ground surface elev. _____

_____ " Depth of exploration or to refusal

Depth below mineral soil surface (inches)	Texture	Consistency	Color	Redox Features
0	Sandy loam	Friable	Dark Brown	
10	Sandy loam	Friable	Brown	
20	Sandy loam	Firm	Olive	Common Distinct
30				
40				
50				
60				

Soil Details by S.E. ▶▶ / S.S. ▶▶

Soil Classification		Slope	Limiting Factor	
3	C	8	17 "	☒ Groundwater ☒ Restrictive Layer ☐ Bedrock
Profile	Condition	Percent	Depth	

Soil Series/Phase Name: Skerry Mwd

☐ Hydric ☒ Non-hydric

Hydrologic Soil Group: _____

Exploration Symbol # 5514

☒ Test Pit ☐ Boring ☐ Probe

_____ " Organic horizon thickness Ground surface elev. _____

_____ " Depth of exploration or to refusal

Depth below mineral soil surface (inches)	Texture	Consistency	Color	Redox Features
0	Sandy loam	Friable	Dark Brown	
10	Sandy loam	Friable	Brown	
20	Sandy loam	Firm	Olive	Common Distinct
30				
40				
50				
60				

Soil Details by S.E. ▶▶ / S.S. ▶▶

Soil Classification		Slope	Limiting Factor	
3	C	14	18 "	☒ Groundwater ☒ Restrictive Layer ☐ Bedrock
Profile	Condition	Percent	Depth	

Soil Series/Phase Name: Skerry Mwd

☐ Hydric ☒ Non-hydric

Hydrologic Soil Group: _____

Exploration Symbol # 5516

☒ Test Pit ☐ Boring ☐ Probe

_____ " Organic horizon thickness Ground surface elev. _____

_____ " Depth of exploration or to refusal

Depth below mineral soil surface (inches)	Texture	Consistency	Color	Redox Features
0	Sandy loam	Friable	Dark Brown	
10	Sandy loam	Friable	Brown	
20	Sandy loam	Firm	Olive	Common Distinct
30				
40				
50				
60				

Soil Details by S.E. ▶▶ / S.S. ▶▶

Soil Classification		Slope	Limiting Factor	
3	C	6	21 "	☒ Groundwater ☒ Restrictive Layer ☐ Bedrock
Profile	Condition	Percent	Depth	

Soil Series/Phase Name: Skerry Mwd

☐ Hydric ☒ Non-hydric

Hydrologic Soil Group: _____

Exploration Symbol # 5516

☒ Test Pit ☐ Boring ☐ Probe

_____ " Organic horizon thickness Ground surface elev. _____

_____ " Depth of exploration or to refusal

Depth below mineral soil surface (inches)	Texture	Consistency	Color	Redox Features
0	Sandy loam	Friable	Dark Brown	
10	Sandy loam	Friable	Brown	
20	Sandy loam	Firm	Olive	Common Distinct
30				
40				
50				
60				

Soil Details by S.E. ▶▶ / S.S. ▶▶

Soil Classification		Slope	Limiting Factor	
3	C	12		☒ Groundwater ☒ Restrictive Layer ☐ Bedrock
Profile	Condition	Percent	Depth	

Soil Series/Phase Name: Skerry Mwd

☐ Hydric ☒ Non-hydric

Hydrologic Soil Group: _____

INVESTIGATOR INFORMATION AND SIGNATURE

Signature: Mark J. Hampton

Date: 3/1/18

Name Printed: Mark J. Hampton

Cert/Lic/Reg. #: 263/2216

Title: ☒ Licensed Site Evaluator ☒ Certified Soil Scientist ☐ Certified Geologist ☐ Professional Engineer

MARK J. HAMPTON #263 CERTIFIED SOIL SCIENTIST

Professional seal

PAGE ___ OF ___

FORM F Rev. 07/11

SOIL PROFILE / CLASSIFICATION INFORMATION

DETAILED DESCRIPTION OF SUBSURFACE CONDITIONS AT PROJECT SITES

Project Name: Watson Woods

Applicant Name: Nathan Wadsworth

Project Location (municipality): Pennsfield

Exploration Symbol # SS17

☒ Test Pit ☐ Boring ☐ Probe

_____ " Organic horizon thickness Ground surface elev. _____

_____ " Depth of exploration or to refusal

Depth below mineral soil surface (inches)	Texture	Consistency	Color	Redox Features
0	Sandy loam	Friable	Dark Brown	
10	Sandy loam	Friable	Brown	
20	Sandy loam	Firm	Dark	Common Distinct
30				
40				
50				
60				

Soil Details by S.E. ▸▸ / S.S. ▸▸

Soil Classification		Slope	Limiting Factor	
3	C	6	18 "	☐ Groundwater ☒ Restrictive Layer ☐ Bedrock
Profile	Condition	Percent	Depth	

Soil Series/Phase Name: Skerry Mud

☐ Hydric ☒ Non-hydric

Hydrologic Soil Group: _____

Exploration Symbol # SS18

☒ Test Pit ☐ Boring ☐ Probe

_____ " Organic horizon thickness Ground surface elev. _____

_____ " Depth of exploration or to refusal

Depth below mineral soil surface (inches)	Texture	Consistency	Color	Redox Features
0	Sandy loam	Friable	Dark Brown	
10	Sandy loam	Friable	Brown	
20	Sandy loam	Firm	Dark	Common Distinct
30				
40				
50				
60				

Soil Details by S.E. ▸▸ / S.S. ▸▸

Soil Classification		Slope	Limiting Factor	
3	C	6	20 "	☒ Groundwater ☒ Restrictive Layer ☐ Bedrock
Profile	Condition	Percent	Depth	

Soil Series/Phase Name: Skerry Mud

☐ Hydric ☒ Non-hydric

Hydrologic Soil Group: _____

Exploration Symbol # SS19

☒ Test Pit ☐ Boring ☐ Probe

_____ " Organic horizon thickness Ground surface elev. _____

_____ " Depth of exploration or to refusal

Depth below mineral soil surface (inches)	Texture	Consistency	Color	Redox Features
0	Sandy loam	Friable	Dark Brown	
10	Sandy loam	Friable	Brown	
20	Sandy loam	Firm	Dark	Common Distinct
30				
40				
50				
60				

Soil Details by S.E. ▸▸ / S.S. ▸▸

Soil Classification		Slope	Limiting Factor	
3	C	15	20 "	☐ Groundwater ☐ Restrictive Layer ☐ Bedrock
Profile	Condition	Percent	Depth	

Soil Series/Phase Name: Skerry Mud

☐ Hydric ☒ Non-hydric

Hydrologic Soil Group: _____

Exploration Symbol # SS20

☒ Test Pit ☐ Boring ☐ Probe

_____ " Organic horizon thickness Ground surface elev. _____

_____ " Depth of exploration or to refusal

Depth below mineral soil surface (inches)	Texture	Consistency	Color	Redox Features
0	Sandy loam	Friable	Dark Brown	
10	Sandy loam	Friable	Brown	
20	Sandy loam	Firm	Dark	Common Distinct
30				
40				
50				
60				

Soil Details by S.E. ▸▸ / S.S. ▸▸

Soil Classification		Slope	Limiting Factor	
3	C	4		
Profile	Condition	Percent	Depth	

Soil Series/Phase Name: Skerry Mud

☐ Hydric ☐ Non-hydric

Hydrologic Soil Group: _____

INVESTIGATOR INFORMATION AND SIGNATURE

Signature: Mary J. Hampton

Date: 3/1/16

Name Printed: Mary J. Hampton

Cert/Lic/Reg. #: 2003/236

Title: ☒ Licensed Site Evaluator ☒ Certified Soil Scientist ☐ Certified Geologist ☐ Professional Engineer

STATE OF MAINE HAMPTON #216 SOIL SCIENTIST

affix professional seal

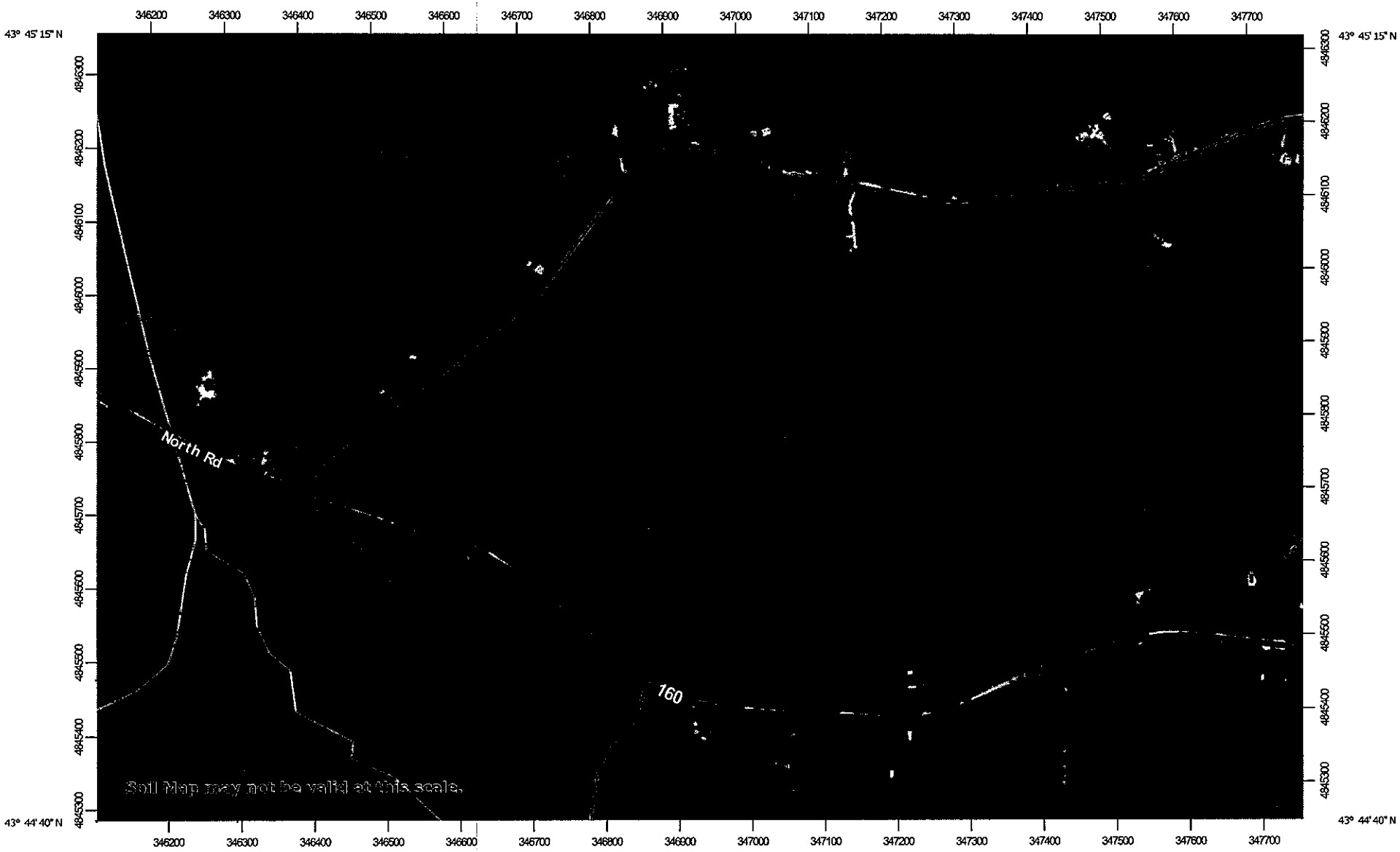

Map Scale: 1:7,550 if printed on A landscape (11" x 8.5") sheet.

N

Meters: 0 100 200 400 600

Feet: 0 350 700 1400 2100

Map projection: Web Mercator Corner coordinates: WGS84 Edge tics: UTM Zone 19N WGS84

MAP LEGEND

Area of Interest (AOI)

- Area of Interest (AOI)

Soils

- Soil Map Unit Polygons
- Soil Map Unit Lines
- Soil Map Unit Points

Special Point Features

- Blowout
- Borrow Pit
- Clay Spot
- Closed Depression
- Gravel Pit
- Gravelly Spot
- Landfill
- Lava Flow
- Marsh or swamp
- Mine or Quarry
- Miscellaneous Water
- Perennial Water
- Rock Outcrop
- Saline Spot
- Sandy Spot
- Severely Eroded Spot
- Sinkhole
- Slide or Slip
- Sodic Spot
- Spoil Area
- Stony Spot
- Very Stony Spot
- Wet Spot
- Other
- Special Line Features

Water Features

- Streams and Canals

Transportation

- Rails
- Interstate Highways
- US Routes
- Major Roads
- Local Roads

Background

- Aerial Photography

MAP INFORMATION

The soil surveys that comprise your AOI were mapped at 1:20,000.

Warning: Soil Map may not be valid at this scale.

Enlargement of maps beyond the scale of mapping can cause misunderstanding of the detail of mapping and accuracy of soil line placement. The maps do not show the small areas of contrasting soils that could have been shown at a more detailed scale.

Please rely on the bar scale on each map sheet for map measurements.

Source of Map: Natural Resources Conservation Service
Web Soil Survey URL:
Coordinate System: Web Mercator (EPSG:3857)

Maps from the Web Soil Survey are based on the Web Mercator projection, which preserves direction and shape but distorts distance and area. A projection that preserves area, such as the Albers equal-area conic projection, should be used if more accurate calculations of distance or area are required.

This product is generated from the USDA-NRCS certified data as of the version date(s) listed below.

Soil Survey Area: York County, Maine
Survey Area Data: Version 16, Sep 11, 2017

Soil map units are labeled (as space allows) for map scales 1:50,000 or larger.

Date(s) aerial images were photographed: Apr 29, 2012—Jun 26, 2016

The orthophoto or other base map on which the soil lines were compiled and digitized probably differs from the background imagery displayed on these maps. As a result, some minor shifting of map unit boundaries may be evident.

Map Unit Legend

Map Unit Symbol	Map Unit Name	Acres in AOI	Percent of AOI
AdC	Adams loamy sand, 8 to 15 percent slopes	2.8	1.5%
BcB	Becket fine sandy loam, 3 to 8 percent slopes	11.0	5.7%
BcC	Becket fine sandy loam, 8 to 15 percent slopes	18.7	9.7%
BcD	Becket fine sandy loam, 15 to 25 percent slopes	26.0	13.5%
BeC	Becket fine sandy loam, 8 to 15 percent slopes, very stony	8.0	4.2%
BsB	Brayton and Westbury very stony fine sandy loams, 0 to 8 percent slopes	25.3	13.2%
HmC	Hermon sandy loam, 8 to 15 percent slopes, very stony	6.8	3.5%
LyB	Lyman-Rock outcrop complex, 3 to 8 percent slopes	5.2	2.7%
LyC	Lyman-Rock outcrop complex, 8 to 15 percent slopes	2.1	1.1%
LyE	Lyman-Rock outcrop complex, 15 to 80 percent slopes	12.0	6.3%
SrB	Skerry fine sandy loam, 0 to 8 percent slopes, very stony	0.4	0.2%
SrC	Skerry fine sandy loam, 8 to 15 percent slopes, very stony	73.5	38.3%
Totals for Area of Interest		**191.7**	**100.0%**

Hydrologic Soil Group and Surface Runoff

This table gives estimates of various soil water features. The estimates are used in land use planning that involves engineering considerations.

Hydrologic soil groups are based on estimates of runoff potential. Soils are assigned to one of four groups according to the rate of water infiltration when the soils are not protected by vegetation, are thoroughly wet, and receive precipitation from long-duration storms.

The four hydrologic soil groups are:

Group A. Soils having a high infiltration rate (low runoff potential) when thoroughly wet. These consist mainly of deep, well drained to excessively drained sands or gravelly sands. These soils have a high rate of water transmission.

Group B. Soils having a moderate infiltration rate when thoroughly wet. These consist chiefly of moderately deep or deep, moderately well drained or well drained soils that have moderately fine texture to moderately coarse texture. These soils have a moderate rate of water transmission.

Group C. Soils having a slow infiltration rate when thoroughly wet. These consist chiefly of soils having a layer that impedes the downward movement of water or soils of moderately fine texture or fine texture. These soils have a slow rate of water transmission.

Group D. Soils having a very slow infiltration rate (high runoff potential) when thoroughly wet. These consist chiefly of clays that have a high shrink-swell potential, soils that have a high water table, soils that have a claypan or clay layer at or near the surface, and soils that are shallow over nearly impervious material. These soils have a very slow rate of water transmission.

If a soil is assigned to a dual hydrologic group (A/D, B/D, or C/D), the first letter is for drained areas and the second is for undrained areas.

Surface runoff refers to the loss of water from an area by flow over the land surface. Surface runoff classes are based on slope, climate, and vegetative cover. The concept indicates relative runoff for very specific conditions. It is assumed that the surface of the soil is bare and that the retention of surface water resulting from irregularities in the ground surface is minimal. The classes are negligible, very low, low, medium, high, and very high.

Report—Hydrologic Soil Group and Surface Runoff

Absence of an entry indicates that the data were not estimated. The dash indicates no documented presence.

Hydrologic Soil Group and Surface Runoff–York County, Maine			
Map symbol and soil name	**Pct. of map unit**	**Surface Runoff**	**Hydrologic Soil Group**
AdC—Adams loamy sand, 8 to 15 percent slopes			
Adams	85	—	A

Hydrologic Soil Group and Surface Runoff–York County, Maine			
Map symbol and soil name	**Pct. of map unit**	**Surface Runoff**	**Hydrologic Soil Group**
BcB—Becket fine sandy loam, 3 to 8 percent slopes			
Becket	85	—	C
BcC—Becket fine sandy loam, 8 to 15 percent slopes			
Becket	85	—	C
BcD—Becket fine sandy loam, 15 to 25 percent slopes			
Becket	85	—	C
BeC—Becket fine sandy loam, 8 to 15 percent slopes, very stony			
Becket, very stony	85	—	C
BsB—Brayton and Westbury very stony fine sandy loams, 0 to 8 percent slopes			
Brayton	60	—	D
Westbury	25	—	D
HmC—Hermon sandy loam, 8 to 15 percent slopes, very stony			
Hermon, very stony	85	—	A
LyB—Lyman-Rock outcrop complex, 3 to 8 percent slopes			
Lyman, very stony	65	—	D
Rock outcrop	20	—	—
LyC—Lyman-Rock outcrop complex, 8 to 15 percent slopes			
Lyman, very stony	62	—	D
Rock outcrop	25	—	—
LyE—Lyman-Rock outcrop complex, 15 to 80 percent slopes			
Lyman, very stony	60	—	D
Rock outcrop	30	—	—
SrB—Skerry fine sandy loam, 0 to 8 percent slopes, very stony			
Skerry, very stony	85	—	C/D
SrC—Skerry fine sandy loam, 8 to 15 percent slopes, very stony			
Skerry, very stony	85	—	C/D

Data Source Information

Soil Survey Area: York County, Maine
Survey Area Data: Version 16, Sep 11, 2017

MARK HAMPTON ASSOCIATES, INC.

SOIL EVALUATION • WETLAND DELINEATIONS • SOIL SURVEYS • WETLAND PERMITTING

4643

April 27, 2018

Mr. Tom Greer
Walsh Engineering Associates, Inc.
One Karen Drive Suite 2A
Westbrook, ME 04092

Re: Preliminary soil evaluation, Watson Woods Subdivision, Parsonsfield, ME

Dear Tom,

On April 26, 2018, I completed a preliminary soil evaluation on a proposed 8 lot subdivision located on Route 160 Parsonsfield, Maine. The parcel is proposed to be developed into 8 single family house lots. The soil evaluation was conducted in accordance with the Maine Subsurface Wastewater Disposal Rules dated August 2015, as amended. I evaluated two hand excavated soil test pits on each proposed lot. The soils found on the parcel are glacial till soils with a limiting factor at approximately 16 to 20 inches. I was able to find suitable soils and area for a septic system on each proposed lot. And in accordance with the Town of Parsonsfield zoning ordinance, I evaluated two test pits on each lot, one for the primary location and one for the reserve location.

The soils as evaluated meet the minimum requirements of the state rules and as such are suitable for the location of a septic system. The disposal bed for a 3 bedroom home would possibly be a 900 square feet stone bed, 20 feet wide and 45 feet long. In my opinion, there are suitable soils and area on each proposed lot for a septic system. A subsurface wastewater disposal design can be prepared at some future date.

If you have any questions or require additional information, please contact me.

Sincerely,

Mark J. Hampton L.S.E., C.S.S.
Licensed Site Evaluator #263
Certified Soil Scientist #216

P.O. BOX 1931 • PORTLAND, ME 04104-1931 • 207-756-2900 • mhampto1@maine.rr.com

Quality services that meet your deadline

PAGE ___ OF ___

4643

FORM F Rev. 07/11

SOIL PROFILE / CLASSIFICATION INFORMATION

DETAILED DESCRIPTION OF SUBSURFACE CONDITIONS AT PROJECT SITES

Project Name: Watson Woods

Applicant Name: Nathan Wadsworth

Project Location (municipality): Parsippany

Exploration Symbol # TP 1

■ Test Pit ☐ Boring ☐ Probe

_____ " Organic horizon thickness Ground surface elev. _____

_____ " Depth of exploration or to refusal

Depth below mineral soil surface (inches)	Texture	Consistency	Color	Redox Features
0	Sandy loam	Friable	Dark Brown	
10	Sandy loam	Friable	Brown	
20	Sandy loam	Firm	Olive	Common distinct
30				
40				
50				
60				

Soil Details by S.E. ▸▸ / S.S. ▸▸

Soil Classification		Slope	Limiting Factor	
3	C	2	16 "	■ Groundwater ■ Restrictive Layer ☐ Bedrock
Profile	Condition	Percent	Depth	

Soil Series/Phase Name: ☐ Hydric ☐ Non-hydric Hydrologic Soil Group

Exploration Symbol # TP 2

■ Test Pit ☐ Boring ☐ Probe

_____ " Organic horizon thickness Ground surface elev. _____

_____ " Depth of exploration or to refusal

Depth below mineral soil surface (inches)	Texture	Consistency	Color	Redox Features
0	Sandy loam	Friable	Dark Brown	
10	Sandy loam	Friable	Brown	
20	Sandy loam	Firm	Olive	Common distinct
30				
40				
50				
60				

Soil Details by S.E. ▸▸ / S.S. ▸▸

Soil Classification		Slope	Limiting Factor	
3	C	2	16 "	■ Groundwater ■ Restrictive Layer ☐ Bedrock
Profile	Condition	Percent	Depth	

Soil Series/Phase Name: ☐ Hydric ☐ Non-hydric Hydrologic Soil Group

Exploration Symbol # TP 3

■ Test Pit ☐ Boring ☐ Probe

_____ " Organic horizon thickness Ground surface elev. _____

_____ " Depth of exploration or to refusal

Depth below mineral soil surface (inches)	Texture	Consistency	Color	Redox Features
0	Sandy loam	Friable	Dark Brown	
10	Sandy loam	Friable	Brown	
20	Sandy loam	Firm	Olive	Common distinct
30				
40				
50				
60				

Soil Details by S.E. ▸▸ / S.S. ▸▸

Soil Classification		Slope	Limiting Factor	
3	C	2	18 "	■ Groundwater ■ Restrictive Layer ☐ Bedrock
Profile	Condition	Percent	Depth	

Soil Series/Phase Name: ☐ Hydric ☐ Non-hydric Hydrologic Soil Group

Exploration Symbol # TP 4

■ Test Pit ☐ Boring ☐ Probe

_____ " Organic horizon thickness Ground surface elev. _____

_____ " Depth of exploration or to refusal

Depth below mineral soil surface (inches)	Texture	Consistency	Color	Redox Features
0	Sandy loam	Friable	Dark Brown	
10	Sandy loam	Friable	Brown	
20	Sandy loam	Firm	Olive	Common distinct
30				
40				
50				
60				

Soil Details by S.E. ▸▸ / S.S. ▸▸

Soil Classification		Slope	Limiting Factor	
3	C	2	18 "	■ Groundwater ■ Restrictive Layer ☐ Bedrock
Profile	Condition	Percent	Depth	

Soil Series/Phase Name: ☐ Hydric ☐ Non-hydric Hydrologic Soil Group

INVESTIGATOR INFORMATION AND SIGNATURE

Signature: Mark J. Hampton Date: 4/27/18

Name Printed: MARK J. Hampton Cert/Lic/Reg. #: 263/216

Title: ■ Licensed Site Evaluator ■ Certified Soil Scientist ☐ Certified Geologist ☐ Professional Engineer

affix professional seal

PAGE ___ OF ___

4643

FORM F Rev. 07/11

SOIL PROFILE / CLASSIFICATION INFORMATION

DETAILED DESCRIPTION OF SUBSURFACE CONDITIONS AT PROJECT SITES

Project Name: Watson Woods

Applicant Name: Nathan Wadsworth

Project Location (municipality): Parsonsfield

Exploration Symbol # TP5

■ Test Pit ☐ Boring ☐ Probe

_____ " Organic horizon thickness Ground surface elev. _____

_____ " Depth of exploration or to refusal

Depth below mineral soil surface (inches)	Texture	Consistency	Color	Redox Features
0	Sandy loam	Friable	Dark brown	
10	Sandy loam	Friable	Brown	
20	Sandy loam	Firm	Olive	Common distinct
30				
40				
50				
60				

Soil Details by S.E. ▸▸ / S.S. ▸▸

Soil Classification: Profile 3 / Condition C

Slope: Percent 2

Limiting Factor: Depth 20 " ☑ Groundwater ☑ Restrictive Layer ☐ Bedrock

Soil Series/Phase Name: ☐ Hydric ☐ Non-hydric

Hydrologic Soil Group

Exploration Symbol # TP6

■ Test Pit ☐ Boring ☐ Probe

_____ " Organic horizon thickness Ground surface elev. _____

_____ " Depth of exploration or to refusal

Depth below mineral soil surface (inches)	Texture	Consistency	Color	Redox Features
0	Sandy loam	Friable	Dark brown	
10	Sandy loam	Friable	Brown	
20	Sandy loam	Firm	Olive	Common distinct
30				
40				
50				
60				

Soil Details by S.E. ▸▸ / S.S. ▸▸

Soil Classification: Profile 3 / Condition C

Slope: Percent 2

Limiting Factor: Depth 20 " ☑ Groundwater ☑ Restrictive Layer ☐ Bedrock

Soil Series/Phase Name: ☐ Hydric ☐ Non-hydric

Hydrologic Soil Group

Exploration Symbol # TP7

■ Test Pit ☐ Boring ☐ Probe

_____ " Organic horizon thickness Ground surface elev. _____

_____ " Depth of exploration or to refusal

Depth below mineral soil surface (inches)	Texture	Consistency	Color	Redox Features
0	Sandy loam	Friable	Dark brown	
10	Sandy loam	Friable	Brown	
20	Sandy loam	Firm	Olive	Common distinct
30				
40				
50				
60				

Soil Details by S.E. ▸▸ / S.S. ▸▸

Soil Classification: Profile 3 / Condition C

Slope: Percent 2

Limiting Factor: Depth 18 " ☑ Groundwater ☑ Restrictive Layer ☐ Bedrock

Soil Series/Phase Name: ☐ Hydric ☐ Non-hydric

Hydrologic Soil Group

Exploration Symbol # TP8

■ Test Pit ☐ Boring ☐ Probe

_____ " Organic horizon thickness Ground surface elev. _____

_____ " Depth of exploration or to refusal

Depth below mineral soil surface (inches)	Texture	Consistency	Color	Redox Features
0	Sandy loam	Friable	Dark brown	
10	Sandy loam	Friable	Brown	
20	Sandy loam	Firm	Olive	Common distinct
30				
40				
50				
60				

Soil Details by S.E. ▸▸ / S.S. ▸▸

Soil Classification: Profile 3 / Condition C

Slope: Percent 2

Limiting Factor: Depth 20 " ☑ Groundwater ☑ Restrictive Layer ☐ Bedrock

Soil Series/Phase Name: ☐ Hydric ☐ Non-hydric

Hydrologic Soil Group

INVESTIGATOR INFORMATION AND SIGNATURE

Signature: Mark J. Hampton

Date: 4/27/18

Name Printed: MARK J. Hampton

Cert/Lic/Reg. #: 263/216

Title: ■ Licensed Site Evaluator ☑ Certified Soil Scientist ☐ Certified Geologist ☐ Professional Engineer

affix professional seal

PAGE ___ OF ___

4643

FORM F Rev. 07/11

SOIL PROFILE / CLASSIFICATION INFORMATION

DETAILED DESCRIPTION OF SUBSURFACE CONDITIONS AT PROJECT SITES

Project Name: Watson Woods

Applicant Name: Nathan Wadsworth

Project Location (municipality): Parsonsfield

Exploration Symbol # TP9

☒ Test Pit ☐ Boring ☐ Probe

_____ " Organic horizon thickness Ground surface elev. _____

_____ " Depth of exploration or to refusal

Depth below mineral soil surface (inches)	Texture	Consistency	Color	Redox Features
0	Sandy loam	Friable	Dark Brown	
10	Sandy loam	Friable	Brown	
20	Sandy loam	Firm	Olive	Common Distinct
30				
40				
50				
60				

Soil Details by S.E. ▸▸ / S.S. ▸▸

Soil Classification		Slope	Limiting Factor	
3	C	2	18 "	☒ Groundwater ☒ Restrictive Layer ☐ Bedrock
Profile	Condition	Percent	Depth	

Soil Series/Phase Name: ☐ Hydric ☐ Non-hydric

Hydrologic Soil Group

Exploration Symbol # TP10

☒ Test Pit ☐ Boring ☐ Probe

_____ " Organic horizon thickness Ground surface elev. _____

_____ " Depth of exploration or to refusal

Depth below mineral soil surface (inches)	Texture	Consistency	Color	Redox Features
0	Sandy loam	Friable	Dark Brown	
10	Sandy loam	Friable	Brown	
20	Sandy loam	Firm	Olive	Common Distinct
30				
40				
50				
60				

Soil Details by S.E. ▸▸ / S.S. ▸▸

Soil Classification		Slope	Limiting Factor	
3	C	2	18 "	☒ Groundwater ☒ Restrictive Layer ☐ Bedrock
Profile	Condition	Percent	Depth	

Soil Series/Phase Name: ☐ Hydric ☐ Non-hydric

Hydrologic Soil Group

Exploration Symbol # TP11

☒ Test Pit ☐ Boring ☐ Probe

_____ " Organic horizon thickness Ground surface elev. _____

_____ " Depth of exploration or to refusal

Depth below mineral soil surface (inches)	Texture	Consistency	Color	Redox Features
0	Sandy loam	Friable	Dark Brown	
10	Sandy loam	Friable	Brown	
20	Sandy loam	Firm	Olive	Common Distinct
30				
40				
50				
60				

Soil Details by S.E. ▸▸ / S.S. ▸▸

Soil Classification		Slope	Limiting Factor	
3	C	4	16 "	☒ Groundwater ☒ Restrictive Layer ☐ Bedrock
Profile	Condition	Percent	Depth	

Soil Series/Phase Name: ☐ Hydric ☐ Non-hydric

Hydrologic Soil Group

Exploration Symbol # TP12

☒ Test Pit ☐ Boring ☐ Probe

_____ " Organic horizon thickness Ground surface elev. _____

_____ " Depth of exploration or to refusal

Depth below mineral soil surface (inches)	Texture	Consistency	Color	Redox Features
0	Sandy loam	Friable	Dark Brown	
10	Sandy loam	Friable	Brown	
20	Sandy loam	Firm	Olive	Common Distinct
30				
40				
50				
60				

Soil Details by S.E. ▸▸ / S.S. ▸▸

Soil Classification		Slope	Limiting Factor	
3	C	4	16 "	☒ Groundwater ☒ Restrictive Layer ☐ Bedrock
Profile	Condition	Percent	Depth	

Soil Series/Phase Name: ☐ Hydric ☐ Non-hydric

Hydrologic Soil Group

INVESTIGATOR INFORMATION AND SIGNATURE

Signature: Mary J. Hampton

Date: 4/27/18

Name Printed: Mary J. Hampton

Cert/Lic/Reg. # 263/216

Title: ☒ Licensed Site Evaluator ☒ Certified Soil Scientist ☐ Certified Geologist ☐ Professional Engineer

affix professional seal

PAGE ___ OF ___

4643

FORM F Rev. 07/11

SOIL PROFILE / CLASSIFICATION INFORMATION

DETAILED DESCRIPTION OF SUBSURFACE CONDITIONS AT PROJECT SITES

Project Name: Watson Woods

Applicant Name: Nathan Wadsworth

Project Location (municipality): Parsmsfield

Exploration Symbol # TP13

■ Test Pit ☐ Boring ☐ Probe

_____ " Organic horizon thickness Ground surface elev. _____

_____ " Depth of exploration or to refusal

Depth below mineral soil surface (inches)

Depth	Texture	Consistency	Color	Redox Features
0	Sandy loam	Friable	Dark Brown	
10	Sandy loam	Friable	Brown	
20	Sandy loam Stony	Firm	Olive	Common & Distinct
30				
40				
50				
60				

Soil Details by S.E. ▸▸ / S.S. ▸▸

Soil Classification		Slope	Limiting Factor	
3	C	2	18 "	☑ Groundwater ☑ Restrictive Layer ☐ Bedrock
Profile	Condition	Percent	Depth	

Soil Series/Phase Name: ☐ Hydric ☐ Non-hydric

Hydrologic Soil Group: _____

Exploration Symbol # TP14

■ Test Pit ☐ Boring ☐ Probe

_____ " Organic horizon thickness Ground surface elev. _____

_____ " Depth of exploration or to refusal

Depth below mineral soil surface (inches)

Depth	Texture	Consistency	Color	Redox Features
0	Sandy loam	Friable	Dark Brown	
10	Sandy loam	Friable	Brown	
20	Sandy loam Stony	Firm	Olive	Common & Distinct
30				
40				
50				
60				

Soil Details by S.E. ▸▸ / S.S. ▸▸

Soil Classification		Slope	Limiting Factor	
3	C	2	18 "	☑ Groundwater ☑ Restrictive Layer ☐ Bedrock
Profile	Condition	Percent	Depth	

Soil Series/Phase Name: ☐ Hydric ☐ Non-hydric

Hydrologic Soil Group: _____

Exploration Symbol # TP15

■ Test Pit ☐ Boring ☐ Probe

_____ " Organic horizon thickness Ground surface elev. _____

_____ " Depth of exploration or to refusal

Depth below mineral soil surface (inches)

Depth	Texture	Consistency	Color	Redox Features
0	Sandy loam	Friable	Dark Brown	
10	Sandy loam	Friable	Brown	
20	Stony Sandy loam	Firm	Olive	Common & Distinct
30				
40				
50				
60				

Soil Details by S.E. ▸▸ / S.S. ▸▸

Soil Classification		Slope	Limiting Factor	
3	C	2	26 "	☑ Groundwater ☑ Restrictive Layer ☐ Bedrock
Profile	Condition	Percent	Depth	

Soil Series/Phase Name: ☐ Hydric ☐ Non-hydric

Hydrologic Soil Group: _____

Exploration Symbol # TP16

■ Test Pit ☐ Boring ☐ Probe

_____ " Organic horizon thickness Ground surface elev. _____

_____ " Depth of exploration or to refusal

Depth below mineral soil surface (inches)

Depth	Texture	Consistency	Color	Redox Features
0	Sandy loam	Friable	Dark Brown	
10	Sandy loam	Friable	Brown	
20	Stony Sandy loam	Firm	Olive	Common & Distinct
30				
40				
50				
60				

Soil Details by S.E. ▸▸ / S.S. ▸▸

Soil Classification		Slope	Limiting Factor	
3	C	6	20 "	☑ Groundwater ☑ Restrictive Layer ☐ Bedrock
Profile	Condition	Percent	Depth	

Soil Series/Phase Name: ☐ Hydric ☐ Non-hydric

Hydrologic Soil Group: _____

INVESTIGATOR INFORMATION AND SIGNATURE

Signature: Mark J. Hampton

Date: 4/27/18

Name Printed: MARK J. Hampton

Cert/Lic/Reg. #: 263/216

Title: ■ Licensed Site Evaluator ■ Certified Soil Scientist ☐ Certified Geologist ☐ Professional Engineer

affix professional seal

MARK HAMPTON ASSOCIATES, INC.

SOIL EVALUATION • WETLAND DELINEATIONS • SOIL SURVEYS • WETLAND PERMITTING

4643

March 1, 2018

Planning Board Chairman and Planning Board Members
Town of Parsonsfield
Parsonsfield, ME

Re: Evaluation of Test Pits for Subsurface Wastewater Disposal and High Intensity Soil Surveys

Dear Chairman and Members of the Planning Board,

I have been an active practicing Licensed Site Evaluator and Certified Soil Scientist for almost 30 years. I worked for a civil engineering company in Westbrook for 11 years before opening my own company in 1999. I am past president of both the Maine Association of Site Evaluators and the Maine Association of Professional Soil Scientists and continue to be active in both organizations.

I have attached to this letter sections from the Maine Subsurface Wastewater Disposal Rules, dated 8/15 as amended and the Maine Association of Professional Soil Scientists, Standards for Soil Survey. Each of these sections talk to the use of soil auger, hand shovels and backhoes for the evaluation of soil test pits. As you read each section you see that it is left up to the discretion of the professional to determine the means of observing and evaluating the test pits.

I hope this helps the board understand the reason why a backhoe is not required to evaluate the soils a parcel for either subsurface wastewater disposal or mapping the soil.

If I can be of anymore help, please don't hesitate to let me know.

Sincerely,

Mark J. Hampton, C.S.S., L.S.E.
Certified Soil Scientist #216
Licensed Site Evaluator #263

Enc.

P.O. BOX 1931 • PORTLAND, ME 04104-1931 • 207-756-2900 • mhampto1@maine.rr.com

Quality services that meet your deadline

MAINE ASSOCIATION OF PROFESSIONAL SOIL SCIENTISTS

GUIDELINES FOR MAINE CERTIFIED SOIL SCIENTISTS FOR SOIL IDENTIFICATION AND MAPPING

FEBRUARY 1995

1. Map units may contain dissimilar limiting individual inclusions larger than 5 acres provided that each dissimilar limiting inclusion is smaller than the minimum map unit size utilized. Dissimilar inclusions within a map unit may total more than the minimum map unit size, in the aggregate, if not contiguous.

2. Scale of 1 inch equals 2,000 feet or larger (e.g. 1" = 1320').

3. Ground control—as determined by the mapper.

4. Base map—as determined by the mapper.

3. Map Units and Soils Classification

The soil survey map units shall be designed according to the standards of the National Cooperative Soil Survey, and the soils shall be classified at the series level according to the current Keys to Soil Taxonomy. Soil map units are phases of soil series.

4. Map Preparation by a Maine Certified Soil Scientist

All soil surveys submitted for the public record, with the exception of Natural Resources Conservation Service soil surveys, shall be stamped and signed by a Maine Certified Soil Scientist licensed by the Maine Board of Certification for Geologists and Soil Scientists.

5. Soil Test Pit Exploration and Observations Logs

All soil survey reports shall include soil observation logs for those test pits or borings described by the soil scientist while gathering data to prepare soil maps. As a minimum, one detailed soil observation log is required for each series and

miscellaneous area named in the soil map legend. The location and number of test pits needed to properly identify and map an area of soils can vary significantly, depending on the complexity of the landscape and the purpose of the soil survey. The depth of the test pits to be logged should also be adequate to allow for complete examination and classification of the soil profiles, particularly if depth to limitations such as restrictive layers or bedrock is relevant. Test pits dug with a backhoe or by similar means are often necessary to verify subsoil and substratum characteristics.

Soil observation logs are not required for those test pits or borings that are used to verify consistency within a map unit for which detailed information is not generally gathered.

6. Accurate Soil Boundary Placement

Soil boundaries are observed throughout their length and their placement corresponds to changes in soils and/or land forms. Map unit boundary placement shall be based on soil characteristics, using observations of vegetation, landforms, and other site features as indications of changes in soil conditions.

7. Map Unit Purity

The soil(s) within an area enclosed by a map unit boundary will have a minimum of 75 percent of the soil(s) that provide the name of that map unit or similar soils. No one similar soil is greater than the named soil(s). The total amount of dissimilar soils shall not exceed 25 percent of the map unit.

8. Map Legend and Map Unit Description

The soil map legend shall include a symbol for each map unit, and the name of the map unit. Special and ad hoc symbols are used to indicate areas that will affect use and management of the soil(s), but are too small to be delineated at the mapping

10-144

Chapter 241

STATE OF MAINE

SUBSURFACE WASTEWATER DISPOSAL RULES

DEPARTMENT OF HEALTH & HUMAN SERVICES
MAINE CENTER FOR DISEASE CONTROL & PREVENTION
DIVISION OF ENVIRONMENTAL HEALTH
11 STATE HOUSE STATION
AUGUSTA, MAINE 04333

EFFECTIVE DATE: August 3, 2015

Appropriation 014-10A-2426-012-2658

SECTION 4
DESIGN CRITERIA

A. SITE EVALUATION REQUIREMENTS

1. General: The selection of a site for each system is based upon a licensed site evaluator's evaluation of those site characteristics that may affect the location and functioning of the system. Each system (and every part thereof) must be sited and designed so that, with adequate installation and maintenance, it will function in a satisfactory manner and will not create a nuisance or source of foulness, pose a threat to public health or safety or to the environment, or otherwise adversely affect the quality of surface water or groundwater.

2. When a site evaluation is required: The completion of a HHE-200 Form is required in order to obtain a permit for the following:

   (a) All first-time subsurface wastewater disposal systems;

   (b) All replacement subsurface wastewater disposal systems;

   (c) All expanded subsurface wastewater disposal systems;

   (d) The installation of any new subsurface wastewater disposal system component; or

   (e) The replacement or modification of any components of an existing subsurface wastewater disposal area. Treatment tanks and other system components located outside the disposal area may be replaced in kind without a site evaluation, upon approval of page one of an HHE-200 (and all other applicable forms) by the LPI.

3. Suitable soil conditions: A disposal field must be located upon soils with the following minimum depths to limiting factors:

   (a) All systems located outside the shoreland area of major water bodies/courses must be located on soils with a minimum depth to seasonal groundwater table or hydraulically restrictive horizon of 9 inches and a minimum depth to bedrock of 9 inches.

   (b) All systems located within the shoreland area of major water bodies/courses must be located on soils with a minimum depth to seasonal groundwater table or hydraulically restrictive horizon of 15 inches and a minimum depth to bedrock of 15 inches, except as allowed in Sections 7(B) and 7(C).

4. Setback distances: For disposal system setback distances, see Sections 7 and 8, for first-time and replacement systems.

5. Soil profile and condition: The soil profile and condition used for the design of a disposal field must be based upon original soils at the site, except when the fill is considered as equivalent to original soils, as provided for in Sections 4(B)(4) and 4(B)(5). The soil profile and condition used for the design of a disposal field must be representative of the most limiting conditions beneath all disposal fields. In addition, the soil conditions beneath the down slope fill material extensions for engineered disposal areas must be evaluated and reported.

6. Location of the system: A system must be located entirely on property owned or controlled by the owner of the system.

   (a) Private property: The owner of a system may locate the system or components partially or completely on other private property, provided the property owners execute an easement in perpetuity for the construction, operation, replacement, and maintenance of the system, giving the system's owner authorization to cross any land or right-of-way between the two parcels. The easement must be filed and cross-referenced in the Registry of Deeds and the municipality's office prior to issuance of a disposal system permit. The easement must provide sufficient buffer around the disposal field and fill material extensions for future replacement and maintenance of the system.

(b) Public property: The owner of the proposed system may locate the system or components partially or completely on abutting public property, provided the entity controlling access to the property executes a letter of no objection giving the system's owner authorization for the construction, operation, replacement, and maintenance of the system.

7. Slope: The slope beneath a disposal field must not exceed 20 percent, interpreted as constant/average slope, unless approved by variance by the Department. The fill extension must reach the existing ground before an existing ground slope of 3:1 (33 percent) or greater, or within 100 feet horizontal distance of the disposal field.

8. Surface runoff: The disposal field and fill shoulders must not be subject to the accumulation of surface runoff. The property owner may utilize surface water diversions, provided they are installed as prescribed by the site evaluator. Surface water diversions cannot result in additional runoff on to abutting properties.

9. Existing subsurface groundwater drains: Ground that contains subsurface ground water drainage systems or the remnants of abandoned subsurface groundwater drainage systems may be unsuitable for the installation of a disposal field. If determined to be a problem this may be corrected by removing the ground water drains or permanently sealing the outlets of the groundwater drainage system.

10. Work Adjacent to or Within Wetlands and Waterbodies: Designs for subsurface wastewater disposal systems adjacent to or within wetlands and waterbodies, each as defined in Section 14 of these Rules, must conform to provisions of Section 12 of these Rules.

B. SOIL PROFILE DESCRIPTIONS

1. General: Observation holes are used to determine the soil and site characteristics important for subsurface wastewater disposal.

2. Soil profile description: For each observation hole used for design purposes, the site evaluator must describe each recognizable soil property and /or parent material, not including bedrock, critical for disposal system design. For each observation hole, the site evaluator must provide this description and document the upper and lower limits within the profile of each of the following soil properties:

   (a) Soil texture: Soil Textural Classification;

   (b) Soil color: Soil color name per the Munsell soil color charts or Department-approved equivalent;

   (c) Soil consistency: Soil resistance to penetration;

   (d) Soil profile: Soil Profile Description (1-12; See Table 4D);

   (e) Soil conditions: Soil drainage, Limiting Factor, Hydraulically Restrictive Horizons, and Bedrock Limiting Factor (See Table 4E)

   (f) Ground Slope: Magnitude and direction of the maximum ground slope at the observation hole.

3. Reporting: The site evaluator must report soil profile data on a standardized application form for a disposal system permit provided by the Department.

4. Filled sites: Where the surface of the ground has been raised by the addition of fill material over the original soil, the disposal field sizing factor is to be determined according to the closest matching soil profile in Table 4E. If the fill is less than 4 feet in thickness, the sizing factor is to be based upon the texture of fill or on the original soil, whichever is finer, and the depth to the most limiting soil horizon. Measurements of depths of soil layers and limiting factors are to be taken from the original ground surface except as provided for in Section 4(B)(5). If the requirements of 4(Q)(7) are satisfied, the disposal area may be sized as described in 4(Q)(7).

i. Original ground surface with notes for site preparation including scarification and transitional horizon;

ii. Height and width of disposal field stone or proprietary devices with dimensions;

iii. Pipes and on-center spacing with dimensions;

iv. Depths of fill material required;

v. Fill crown slope and shoulders with dimensions;

vi. Limits of all fill extensions with dimensions:

5. Proprietary Products: To reduce the appearance of an impropriety, the Site Evaluator shall clearly indicate on the HHE-200 form or on an attachment to same, his or her relationship with a company or concern that sells or distributes proprietary devices. The intent of this Section is to ensure disclosure to the homeowner.

6. Applicable Laws, Ordinances, and Regulations: The completed HHE-200 Form must conform to all provisions of applicable laws, ordinances, and regulations, including those administered by public water systems.

7. The LPI may authorize changes to the location(s) of treatment tanks, lift stations, building sewers, distribution boxes, drop boxes, and force mains provided that applicable minimum setback distances are maintained. Such alterations must be documented by the LPI.

B. LOCATION, DEPTH, AND MINIMUM NUMBER OF OBSERVATION HOLES

1. General: Because Maine soil conditions can change dramatically within a few feet, more than one observation hole is often necessary to allow a site evaluator to better define the true soil conditions beneath a proposed disposal field. Observation holes used for design purposes must be located at representative points clearly within the footprints of proposed non-engineered subsurface wastewater disposal fields.

2. Minimum number of observation holes: The number of observation holes must be sufficient to determine the soil and site characteristics beneath the entire disposal field.

3. Minimum depth of observation holes: The minimum depth of observation holes is based upon the soil horizons and conditions present at the site of a proposed disposal field, as follows:

   (a) Hydraulically restrictive horizons: Observation holes must extend at least 12 inches into the hydraulically restrictive horizon to check for bedrock except that no excavation is required greater than 48 inches in depth.

   (b) Seasonal ground water table: Observation holes must extend at least 12 inches below the seasonal ground water table to check for bedrock except no excavation is required greater than 48 inches in depth.

4. Dig Safe Law: The "Dig Safe Law" requires notification if other than hand tools are utilized to dig observation holes (See 23 M.R.S. § 3360-A).

MARK HAMPTON ASSOCIATES, INC.

SOIL EVALUATION • WETLAND DELINEATIONS • SOIL SURVEYS • WETLAND PERMITTING

4643
September 14, 2016

Mr. Tom Greer
Pinkham & Greer Civil Engineers
28 Vannah Avenue
Portland, ME 04103

Re: Wetland Delineation, 58 acre parcel Hussey Road Parsonsfield, ME

Dear Tom,

Today, I completed a wetland delineation on an 58 acre parcel located on Hussey Road Parsonsfield, ME. The wetland delineation was completed in accordance with the 1987 U.S. Army Corps of Engineers Wetland Delineation Manual and the Regional Supplement to the Corps of Engineers Wetland Delineation Manual for the Northcentral and Northeast Regions dated January 2012. These manuals require the presence of three parameters for a wetland to be present, wetland hydrology, hydrophytic vegetation, and hydric soils.

The wetlands I found on the parcel were flagged with yellow flagging. The flagging was labeled in an alphanumeric sequence. The wetland flags were located by gps equipment capable of locating a point to within three feet. The wetland data has been forwarded to your office. The wetlands found onsite are forested wetlands. The wetlands on the parcel are related to drainage moving across the site from southeast to northwest. The wetlands on the parcel located adjacent to the stream will meet the definition of wetlands of special significance as defined by Maine Department of Environmental Protection.

If you have any questions or require additional information, please contact me.

Sincerely,

Mark J. Hampton C.S.S., L.S.E.
Certified Soil Scientist #216
Licensed Site Evaluator #263

P.O. BOX 1931 • PORTLAND, ME 04104-1931 • 207-756-2900 • mhampto1@maine.rr.com

Quality services that meet your deadline

United States Department of the Interior

FISH AND WILDLIFE SERVICE
Maine Ecological Services Field Office
306 HATCHERY ROAD
EAST ORLAND, ME 04431
PHONE: (207)469-7300 FAX: (207)902-1588
URL: www.fws.gov/mainefieldoffice/index.html

Consultation Code: 05E1ME00-2017-SLI-0346 February 24, 2017
Event Code: 05E1ME00-2017-E-00573
Project Name: Parsonsfield Subdivision

Subject: List of threatened and endangered species that may occur in your proposed project location, and/or may be affected by your proposed project

To Whom It May Concern:

The enclosed species list identifies the threatened, endangered, candidate, and proposed species and designated or proposed critical habitat that may occur within the boundary of your proposed project or may be affected by your proposed project. This species list fulfills the requirements of the U.S. Fish and Wildlife Service (Service) under section 7(c) of the Endangered Species Act (Act) of 1973, as amended (16 U.S.C. 1531 et seq.).

New information based on updated surveys, changes in the abundance and distribution of species, changed habitat conditions, or other factors could change this list. Please feel free to contact us if you need more current information or assistance regarding the potential impacts to federally proposed, listed, and candidate species and federally designated and proposed critical habitat. Please note that under 50 CFR 402.12(e) of the regulations implementing section 7 of the Act, the accuracy of this species list should be verified after 90 days. This verification can be
completed formally or informally as desired. The Service recommends that verification be completed by visiting the ECOS-IPaC Web site at regular intervals during project planning and implementation for updates to species lists and information. An updated list may be requested through the ECOS-IPaC system by completing the same process used to receive the enclosed list.

The purpose of the Act is to provide a means whereby threatened and endangered species and the ecosystems upon which they depend may be conserved. Under sections 7(a)(1) and 7(a)(2) of the Act and its implementing regulations (50 CFR 402 et seq.), Federal agencies are required to utilize their authorities to carry out programs for the conservation of threatened and endangered species and to determine whether projects may affect threatened and endangered species and/or designated critical habitat.

A Biological Assessment is required for construction projects (or other undertakings having similar physical impacts) that are major Federal actions significantly affecting the quality of the human environment as defined in the National Environmental Policy Act (42 U.S.C. 4332(2)(c)). For projects other than major construction activities, the Service suggests that a biological evaluation similar to a Biological Assessment be prepared to determine whether the project may affect listed or proposed species and designated or proposed critical habitat. Recommended contents of a Biological Assessment are described at 50 CFR 402.12.

If a Federal agency determines, based on the Biological Assessment or biological evaluation, that listed species or designated critical habitat may be affected by the proposed project, the agency is required to consult with the Service pursuant to 50 CFR 402. In addition, the Service recommends that candidate species, proposed species and proposed critical habitat be addressed within the consultation. More information on the regulations and procedures for section 7 consultation, including the role of permit or license applicants, can be found in the Endangered Species Consultation Handbook at:
http://www.fws.gov/endangered/esa-library/pdf/TOC-GLOS.PDF

This species list also identifies candidate species under review for listing and those species that the Service considers species of concern. Candidate species have no protection under the Act but are included for consideration because they could be listed prior to completion of your project. Species of concern are those taxa whose conservation status is of concern to the Service (i.e., species previously known as Category 2 candidates), but for which further information is needed.

If a proposed project may affect only candidate species or species of concern, you are not required to prepare a Biological Assessment or biological evaluation or to consult with the Service. However, the Service recommends minimizing effects to these species to prevent future conflicts. Therefore, if early evaluation indicates that a project will affect a candidate species or species of concern, you may wish to request technical assistance from this office to identify appropriate minimization measures.

Please be aware that bald and golden eagles are not protected under the Endangered Species Act but are protected under the Bald and Golden Eagle Protection Act (16 U.S.C. 668 et seq.). Projects affecting these species may require development of an eagle conservation plan: http://www.fws.gov/windenergy/eagle_guidance.html Information on the location of bald eagle nests in Maine can be found on the Maine Field Office Web site:
http://www.fws.gov/mainefieldoffice/Project%20review4.html

Additionally, wind energy projects should follow the wind energy guidelines:
http://www.fws.gov/windenergy/ for minimizing impacts to migratory birds and bats. Projects may require development of an avian and bat protection plan.

Migratory birds are also a Service trust resource. Under the Migratory Bird Treaty Act, construction activities in grassland, wetland, stream, woodland, and other habitats that would result in the take of migratory birds, eggs, young, or active nests should be avoided. Guidance for minimizing impacts to migratory birds for projects including communications towers (e.g., cellular, digital television, radio, and emergency broadcast) can be found at:
http://www.fws.gov/migratorybirds/CurrentBirdIssues/Hazards/towers/towers.htm and at:

http://www.towerkill.com; and at:
http://www.fws.gov/migratorybirds/CurrentBirdIssues/Hazards/towers/comtow.html

We appreciate your concern for threatened and endangered species. The Service encourages Federal agencies to include conservation of threatened and endangered species into their project planning to further the purposes of the Act. Please include the Consultation Tracking Number in the header of this letter with any request for consultation or correspondence about your project that you submit to our office.

Attachment

United States Department of Interior
Fish and Wildlife Service

Project name: Parsonsfield Subdivision

Official Species List

Provided by:

Maine Ecological Services Field Office
P. O. BOX A
EAST ORLAND, ME 04431
(207) 469-7300
http://www.fws.gov/mainefieldoffice/index.html

Consultation Code: 05E1ME00-2017-SLI-0346
Event Code: 05E1ME00-2017-E-00573

Project Type: ** OTHER **

Project Name: Parsonsfield Subdivision
Project Description: Corner of Route 160 and Hussey Rd, Parsonsfield, ME

Please Note: The FWS office may have modified the Project Name and/or Project Description, so it may be different from what was submitted in your previous request. If the Consultation Code matches, the FWS considers this to be the same project. Contact the office in the 'Provided by' section of your previous Official Species list if you have any questions or concerns.

United States Department of Interior
Fish and Wildlife Service

Project name: Parsonsfield Subdivision

Project Location Map:

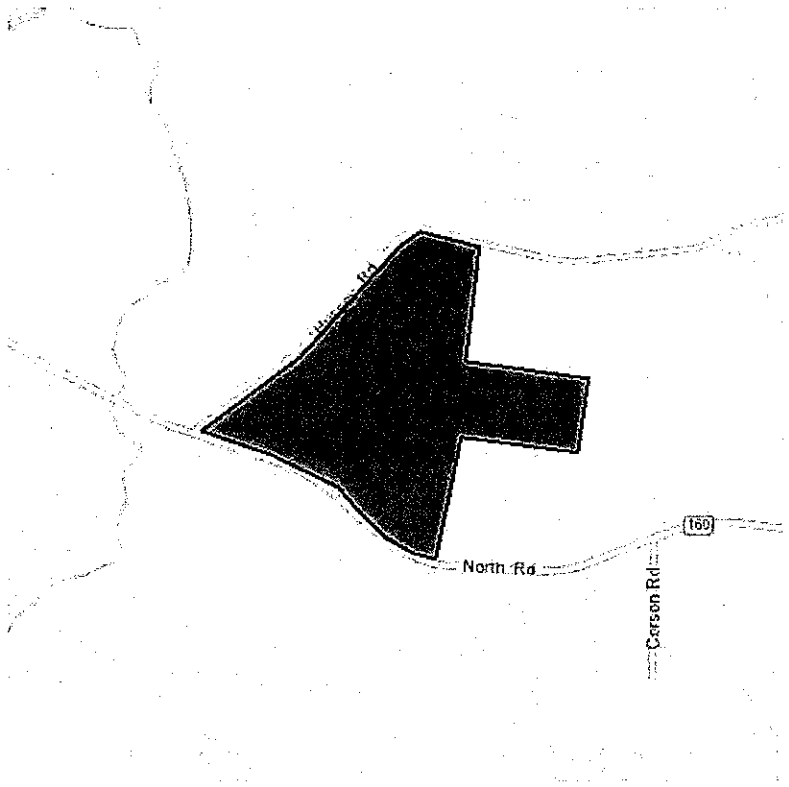

Project Coordinates: MULTIPOLYGON (((-70.9002470970154 43.7486066586007, -70.89692115783693 43.74829664560014, -70.89662075042726 43.7498466945462, -70.90009689331056 43.75020320012573, -70.89973211288454 43.75254368402187, -70.90138435363771 43.752884674036565, -70.90202808380128 43.752574683194396, -70.90486049652101 43.750280701057676, -70.90771436691286 43.748746163927116, -70.9057402610779 43.74825014351157, -70.90378761291505 43.74759911047809, -70.90318679809572 43.74707207855039, -70.90243577957155 43.74654504198231, -70.90164184570314 43.746219517077925, -70.90095520019533 43.74609550712489, -70.9002470970154 43.7486066586007)))

Project Counties: York, ME

United States Department of Interior
Fish and Wildlife Service

Project name: Parsonsfield Subdivision

Endangered Species Act Species List

There are a total of 2 threatened or endangered species on your species list. Species on this list should be considered in an effects analysis for your project and could include species that exist in another geographic area. For example, certain fish may appear on the species list because a project could affect downstream species. Critical habitats listed under the **Has Critical Habitat** column may or may not lie within your project area. See the **Critical habitats within your project area** section further below for critical habitat that lies within your project. Please contact the designated FWS office if you have questions.

Flowering Plants	**Status**	**Has Critical Habitat**	**Condition(s)**
Small Whorled pogonia *(Isotria medeoloides)* Population: Wherever found	Threatened		
Mammals			
Northern long-eared Bat *(Myotis septentrionalis)* Population: Wherever found	Threatened		

United States Department of Interior
Fish and Wildlife Service

Project name: Parsonsfield Subdivision

Critical habitats that lie within your project area

There are no critical habitats within your project area.

STATE OF MAINE
DEPARTMENT OF AGRICULTURE, CONSERVATION & FORESTRY
93 STATE HOUSE STATION
AUGUSTA, MAINE 04333

PAUL R. LEPAGE
GOVERNOR

WALTER E. WHITCOMB
COMMISSIONER

Tom Greer
Pinkham and Greer, Civil Engineers

September 29, 2017

Re: Watson Woods – Small Whorled Pogonia Survey

Dear Mr. Greer:

As per your request, on September 28, 2017, Don Cameron, staff botanist with the Maine Natural Areas Program, surveyed the proposed Watson Woods subdivision site in the Town of Parsonsfield for Small Whorled Pogonia (*Isotria medeoloides*). Don is a recognized expert on the identification and ecology of this rare species.

The site is a 57 acre parcel located northeast of the intersection Rt. 160 and Hussey Road in the central part of the town. The site has been somewhat recently harvested for timber, with harvesting being heaviest in the northern portion where there was a large multi-acre clearing, and less intensive in other areas where some smaller patches of trees remained. The areas which had the highest potential for small whorled pogonia and received the most detailed survey were 1) the broad drainage that crossed the parcel from ~ the south corner toward the northwest boundary and 2) the parcel margin along the road frontage on Hussey Road. These areas still supported sufficient tree cover to provide the degree of shade that would be required by the rare small whorled pogonia as well as other common forest herbs. Other scattered patches within the harvested matrix also provided shade. These areas were mostly 50 – 100 feet in diameter and were also surveyed as part of the traverse through the site.

No small whorled pogonia was observed during the survey. See Map 1 on page 2 for GPS data showing survey effort. Areas with few or no GPS points were areas were no habitat was present that could have supported small whorled pogonia, i.e., the aforementioned large cleared section on the north side of the site.

Please let me know if you have any questions. Note that an invoice for services rendered will be sent under separate cover.

Sincerely,

Don Cameron, Botanist/Ecologist
Maine Natural Areas Program
#93 State House Station
Augusta, ME 04333-0093
(phone - 207-287-8041 / fax - 207-287-8040)

MOLLY DOCHERTY, DIRECTOR
MAINE NATURAL AREAS PROGRAM

DEPARTMENT OF Agriculture Conservation & Forestry

PHONE: (207) 287-8044
FAX: (207) 287-8040
WWW.MAINE.GOV/DACF/MNAP

Map 1 – Survey Area – Watson Woods

Yellow dots are GPS waypoints representing survey effort from the survey performed on 9/28/2017. Areas with the highest concentration of survey effort correspond to areas at the site where there was sufficient shade to potentially support small whorled pogonia. Note that areal imagery used here is not representative of current site conditions.

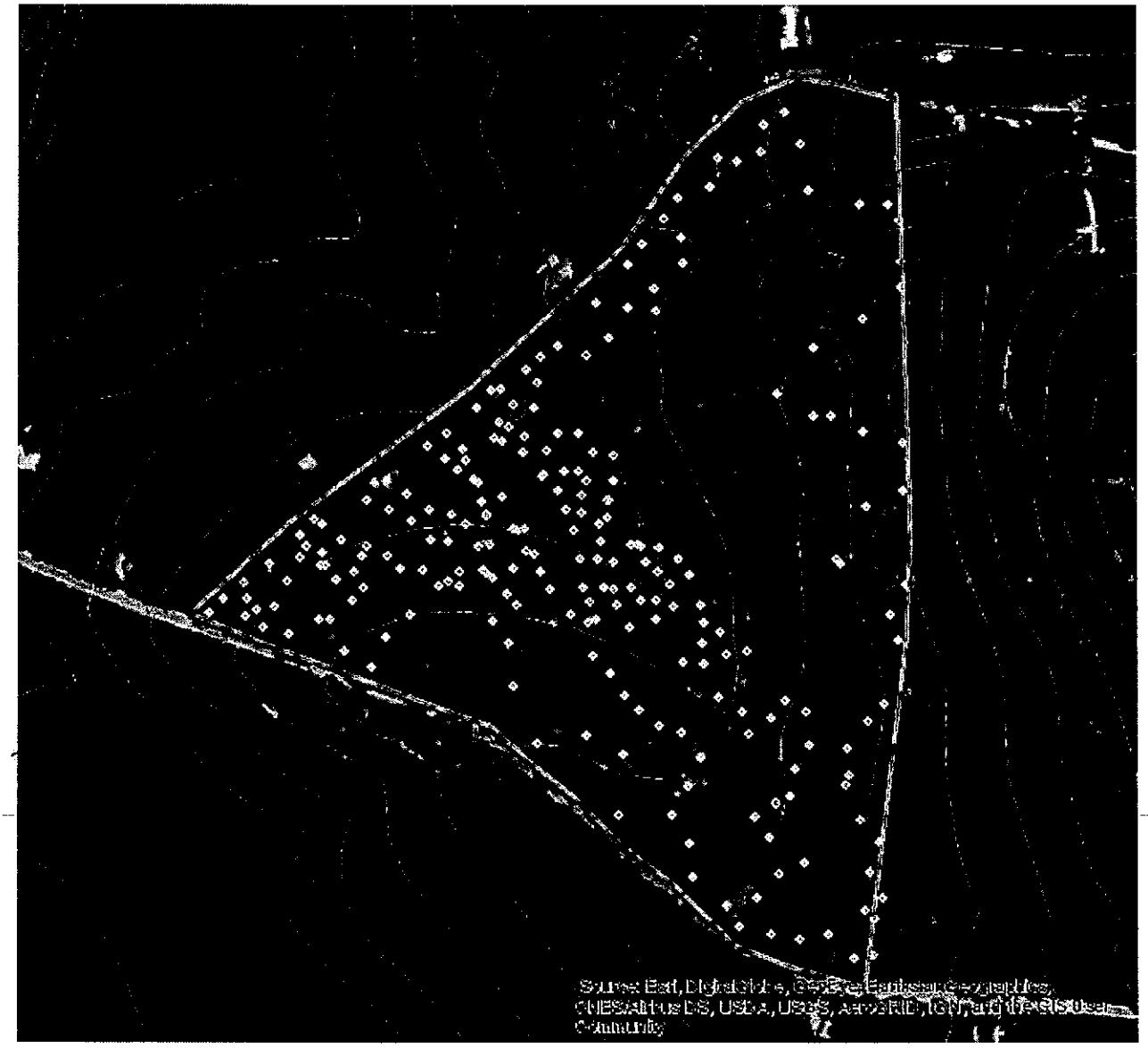

STATE OF MAINE
DEPARTMENT OF AGRICULTURE, CONSERVATION & FORESTRY
93 STATE HOUSE STATION
AUGUSTA, MAINE 04333

PAUL R. LEPAGE
GOVERNOR

WALTER E. WHITCOMB
COMMISSIONER

August 21, 2017

Thomas Greer
Pinkham & Greer Civil Engineers
28 Vannah Ave.
Portland, ME 04103

Via email: pgce@pinkhamandgreer.com

Re: Rare and exemplary botanical features in proximity to: #16149, Watson Woods Residential Subdivision, Parsonsfield, Maine

Dear Mr. Greer:

I have searched the Natural Areas Program's Biological and Conservation Data System files in response to your request received August 21, 2017 for information on the presence of rare or unique botanical features documented from the vicinity of the project in Parsonsfield, Maine. Rare and unique botanical features include the habitat of rare, threatened, or endangered plant species and unique or exemplary natural communities. Our review involves examining maps, manual and computerized records, other sources of information such as scientific articles or published references, and the personal knowledge of staff or cooperating experts.

Our official response covers only botanical features. For authoritative information and official response for zoological features you must make a similar request to the Maine Department of Inland Fisheries and Wildlife, 284 State Street, Augusta, Maine 04333.

According to the information currently in our Biological and Conservation Data System files, there are no rare botanical features documented specifically within the project area. This lack of data may indicate minimal survey efforts rather than confirm the absence of rare botanical features. You may want to have the site inventoried by a qualified field biologist to ensure that no undocumented rare features are inadvertently harmed.

If a field survey of the project area is conducted, please refer to the enclosed supplemental information regarding rare and exemplary botanical features documented to occur in the vicinity of the project site. The list may include information on features that have been known to occur historically in the area as well as recently field-verified information. While historic records have not been documented in several years, they may persist in the area if suitable habitat exists. The enclosed list identifies features with potential to occur in the area, and it should be considered if you choose to conduct field surveys.

This finding is available and appropriate for preparation and review of environmental assessments, but it is not a substitute for on-site surveys. Comprehensive field surveys do not exist for all natural areas in Maine, and in the absence of a specific field investigation, the Maine Natural Areas Program cannot provide a definitive statement on the presence or absence of unusual natural features at this site.

MOLLY DOCHERTY, DIRECTOR
MAINE NATURAL AREAS PROGRAM

DEPARTMENT OF Agriculture Conservation & Forestry

PHONE: (207) 287-8044
FAX: (207) 287-8040
WWW.MAINE.GOV/DACF/MNAP

The Natural Areas Program is continuously working to achieve a more comprehensive database of exemplary natural features in Maine. We would appreciate the contribution of any information obtained should you decide to do field work. The Natural Areas Program welcomes coordination with individuals or organizations proposing environmental alteration, or conducting environmental assessments. If, however, data provided by the Natural Areas Program are to be published in any form, the Program should be informed at the outset and credited as the source.

The Natural Areas Program has instituted a fee structure of $75.00 an hour to recover the actual cost of processing your request for information. You will receive an invoice for $150.00 for two hours of our services.

Thank you for using the Natural Areas Program in the environmental review process. Please do not hesitate to contact me if you have further questions about the Natural Areas Program or about rare or unique botanical features on this site.

Sincerely,

Kristen Puryear | Ecologist | Maine Natural Areas Program
207-287-8043 | kristen.puryear@maine.gov

Rare and Exemplary Botanical Features within 4 miles of
Project: #16149, Watson Woods Residential Subdivision, Parsonsfield, Maine

Common Name	State Status	State Rank	Global Rank	Date Last Observed	Occurrence Number	Habitat
merican Ginseng						
	E	S3	G3G4	2000-09-16	30	Hardwood to mixed forest (forest, upland)
	E	S3	G3G4	2001-08-07	23	Hardwood to mixed forest (forest, upland)
	E	S3	G3G4	1930	14	Hardwood to mixed forest (forest, upland)
	E	S3	G3G4	2002-09-01	26	Hardwood to mixed forest (forest, upland)
utumn Coral-root						
	E	S1	G5	2013-09-15	4	Hardwood to mixed forest (forest, upland)
lunt-lobed Woodsia						
	T	S1	G5	2006-07-08	7	Rocky summits and outcrops (non-forested, upland),Hardwood to mixed forest (forest, upland)
	T	S1	G5	2000-06-28	9	Rocky summits and outcrops (non-forested, upland),Hardwood to mixed forest (forest, upland)
ottlebrush Grass						
	SC	S3	G5	2010-07-18	1	Hardwood to mixed forest (forest, upland)
	SC	S3	G5	2001-08-07	15	Hardwood to mixed forest (forest, upland)
	SC	S3	G5	2000-06-28	18	Hardwood to mixed forest (forest, upland)
	SC	S3	G5	2010-06-30	14	Hardwood to mixed forest (forest, upland)
road Beech Fern						
	SC	S2	G5	2001-08-07	29	Hardwood to mixed forest (forest, upland)
reeping Spike-moss						
	E	S2	G5	2014-06-12	7	Open wetland, not coastal nor rivershore (non-forested, wetland),Old field/roadside (non-forested, wetland or upland)
ouglas' Knotweed						
	SC	S2	G5	2001-08-07	6	Rocky summits and outcrops (non-forested, upland)
	SC	S2	G5	2000-06-28	9	Rocky summits and outcrops (non-forested, upland)

Rare and Exemplary Botanical Features within 4 miles of
Project: #16149, Watson Woods Residential Subdivision, Parsonsfield, Maine

Common Name	State Status	State Rank	Global Rank	Date Last Observed	Occurrence Number	Habitat
	SC	S2	G5	2002-09-06	8	Rocky summits and outcrops (non-forested, upland)
	SC	S2	G5	2010-06-30	2	Rocky summits and outcrops (non-forested, upland)
Dry Land Sedge						
	SC	S2	G5	2000-05-21	7	Old field/roadside (non-forested, wetland or upland)
Early Crowfoot						
	T	S1	G5	2001-05-09	2	Rocky summits and outcrops (non-forested, upland),Hardwood to mixed forest (forest, upland)
Ebony Spleenwort						
	SC	S2	G5	2000-06-28	18	Rocky summits and outcrops (non-forested, upland),Hardwood to mixed forest (forest, upland)
	SC	S2	G5	2002-09-01	24	Rocky summits and outcrops (non-forested, upland),Hardwood to mixed forest (forest, upland)
	SC	S2	G5	2000-07-21	16	Rocky summits and outcrops (non-forested, upland),Hardwood to mixed forest (forest, upland)
Enriched Northern Hardwoods Forest						
	<null>	S3	GNR	2001-08-07	1	Hardwood to mixed forest (forest, upland)
Fern-leaved False Foxglove						
	SC	S3	G5	2010-06-30	17	Dry barrens (partly forested, upland),Hardwood to mixed forest (forest, upland)
	SC	S3	G5	2010-06-07	16	Dry barrens (partly forested, upland),Hardwood to mixed forest (forest, upland)
Fogg's Goosefoot						
	T	S1	G3Q	2010-06-30	1	<null>
Hairy Wood Brome-grass						
	SC	S2	G5	2010-06-30	9	Hardwood to mixed forest (forest, upland),Non-tidal rivershore (non-forested, seasonally wet)
	SC	S2	G5	2010-07-18	8	Hardwood to mixed forest (forest, upland),Non-tidal rivershore (non-forested, seasonally wet)

Rare and Exemplary Botanical Features within 4 miles of
Project: #16149, Watson Woods Residential Subdivision, Parsonsfield, Maine

Common Name	State Status	State Rank	Global Rank	Date Last Observed	Occurrence Number	Habitat
	SC	S2	G5	2000-06-28	10	Hardwood to mixed forest (forest, upland),Non-tidal rivershore (non-forested, seasonally wet)
Hemlock Forest						
	<null>	S4	G4G5	2001-08-07	18	Conifer forest (forest, upland),Hardwood to mixed forest (forest, upland)
Missouri Rockcress						
	T	S1	G5?Q	2000-06-28	6	Rocky summits and outcrops (non-forested, upland),Hardwood to mixed forest (forest, upland)
	T	S1	G5?Q	2000-05-26	4	Rocky summits and outcrops (non-forested, upland),Hardwood to mixed forest (forest, upland)
	T	S1	G5?Q	2010-06-30	3	Rocky summits and outcrops (non-forested, upland),Hardwood to mixed forest (forest, upland)
Nodding Pogonia						
	T	S2	G3G4	2013-08-18	7	Hardwood to mixed forest (forest, upland)
Oak - Ash Woodland						
	<null>	S3	G3G5	2000-05-26	4	Rocky summits and outcrops (non-forested, upland),Dry barrens (partly forested, upland)
	<null>	S3	G3G5	2001-08-07	6	Rocky summits and outcrops (non-forested, upland),Dry barrens (partly forested, upland)
	<null>	S3	G3G5	2000-06-28	13	Rocky summits and outcrops (non-forested, upland),Dry barrens (partly forested, upland)
	<null>	S3	G3G5	2010-07-01	2	Rocky summits and outcrops (non-forested, upland),Dry barrens (partly forested, upland)
Pocket Swamp						
	<null>	S2	G5	2000-05-05	17	Forested wetland,Hardwood to mixed forest (forest, upland)
Shining Ladies'-tresses						
	T	S1	G5	1941	15	Non-tidal rivershore (non-forested, seasonally wet),Open wetland, not coastal nor rivershore (non-forested, wetland)
Small Whorled Pogonia						

Rare and Exemplary Botanical Features within 4 miles of
Project: #16149, Watson Woods Residential Subdivision, Parsonsfield, Maine

Common Name	State Status	State Rank	Global Rank	Date Last Observed	Occurrence Number	Habitat
	E	S2	G2	1987-07-15	14	Hardwood to mixed forest (forest, upland)
	E	S2	G2	1986-08-22	23	Hardwood to mixed forest (forest, upland)
	E	S2	G2	2015-06-17	21	Hardwood to mixed forest (forest, upland)
	E	S2	G2	2013-06-13	27	Hardwood to mixed forest (forest, upland)
	E	S2	G2	2001-07-18	29	Hardwood to mixed forest (forest, upland)
	E	S2	G2	2013-06-13	33	Hardwood to mixed forest (forest, upland)
Smooth Rockcress						
	T	S1	G5	2000-06-28	6	Rocky summits and outcrops (non-forested, upland),Hardwood to mixed forest (forest, upland)
Smooth Winterberry Holly						
	SC	S3	G5	2008-10-02	17	Forested wetland
Spotted Wintergreen						
	E	S2	G5	2002-08-22	19	Conifer forest (forest, upland),Hardwood to mixed forest (forest, upland)
	E	S2	G5	1987-07-15	5	Conifer forest (forest, upland),Hardwood to mixed forest (forest, upland)
Summer Grape						
	T	S2	G5T5	2000-06-28	5	Hardwood to mixed forest (forest, upland),Rocky summits and outcrops (non-forested, upland)
Tall Sedge Fen						
	<null>	S4	G4G5	2009-07-16	5	Open wetland, not coastal nor rivershore (non-forested, wetland),Coastal non-tidal wetland (non-forested, wetland)
Three-seeded Mercury						
	PE	SH	G5	1902-08	1	Dry barrens (partly forested, upland),Old field/roadside (non-forested, wetland or upland)

STATE RARITY RANKS

S1 Critically imperiled in Maine because of extreme rarity (five or fewer occurrences or very few remaining individuals or acres) or because some aspect of its biology makes it especially vulnerable to extirpation from the State of Maine.
S2 Imperiled in Maine because of rarity (6-20 occurrences or few remaining individuals or acres) or because of other factors making it vulnerable to further decline.
S3 Rare in Maine (20-100 occurrences).
S4 Apparently secure in Maine.
S5 Demonstrably secure in Maine.
SU Under consideration for assigning rarity status; more information needed on threats or distribution.
SNR Not yet ranked.
SNA Rank not applicable.
S#? Current occurrence data suggests assigned rank, but lack of survey effort along with amount of potential habitat create uncertainty (e.g. S3?).

Note: **State Rarity Ranks** are determined by the Maine Natural Areas Program for rare plants and rare and exemplary natural communities and ecosystems. The Maine Department of Inland Fisheries and Wildlife determines State Rarity Ranks for animals.

GLOBAL RARITY RANKS

G1 Critically imperiled globally because of extreme rarity (five or fewer occurrences or very few remaining individuals or acres) or because some aspect of its biology makes it especially vulnerable to extinction.
G2 Globally imperiled because of rarity (6-20 occurrences or few remaining individuals or acres) or because of other factors making it vulnerable to further decline.
G3 Globally rare (20-100 occurrences).
G4 Apparently secure globally.
G5 Demonstrably secure globally.
GNR Not yet ranked.

Note: **Global Ranks** are determined by NatureServe.

STATE LEGAL STATUS

Note: State legal status is according to 5 M.R.S.A. § 13076-13079, which mandates the Department of Conservation to produce and biennially update the official list of Maine's **Endangered** and **Threatened** plants. The list is derived by a technical advisory committee of botanists who use data in the Natural Areas Program's database to recommend status changes to the Department of Conservation.

E ENDANGERED; Rare and in danger of being lost from the state in the foreseeable future; or federally listed as Endangered.
T THREATENED; Rare and, with further decline, could become endangered; or federally listed as Threatened.

NON-LEGAL STATUS

SC SPECIAL CONCERN; Rare in Maine, based on available information, but not sufficiently rare to be considered Threatened or Endangered.
PE Potentially Extirpated; Species has not been documented in Maine in past 20 years or loss of last known occurrence has been documented.

Visit our website for more information on rare, threatened, and endangered species!
http://www.maine.gov/dacf/mnap

ELEMENT OCCURRENCE RANKS - EO RANKS

Element Occurrence ranks are used to describe the quality of a rare plant population or natural community based on three factors:

- **Size**: Size of community or population relative to other known examples in Maine. Community or population's viability, capability to maintain itself.
- **Condition**: For communities, condition includes presence of representative species, maturity of species, and evidence of human-caused disturbance. For plants, factors include species vigor and evidence of human-caused disturbance.
- **Landscape context**: Land uses and/or condition of natural communities surrounding the observed area. Ability of the observed community or population to be protected from effects of adjacent land uses.

These three factors are combined into an overall ranking of the feature of **A**, **B**, **C**, or **D**, where **A** indicates an **excellent** example of the community or population and **D** indicates a **poor** example of the community or population. A rank of **E** indicates that the community or population is **extant** but there is not enough data to assign a quality rank. The Maine Natural Areas Program tracks all occurrences of rare (S1-S3) plants and natural communities as well as A and B ranked common (S4-S5) natural communities.

Note: **Element Occurrence Ranks** are determined by the Maine Natural Areas Program for rare plants and rare and exemplary natural communities and ecosystems. The Maine Department of Inland Fisheries and Wildlife determines Element Occurrence ranks for animals.

Visit our website for more information on rare, threatened, and endangered species!
http://www.maine.gov/dacf/mnap

Beginning With Habitat

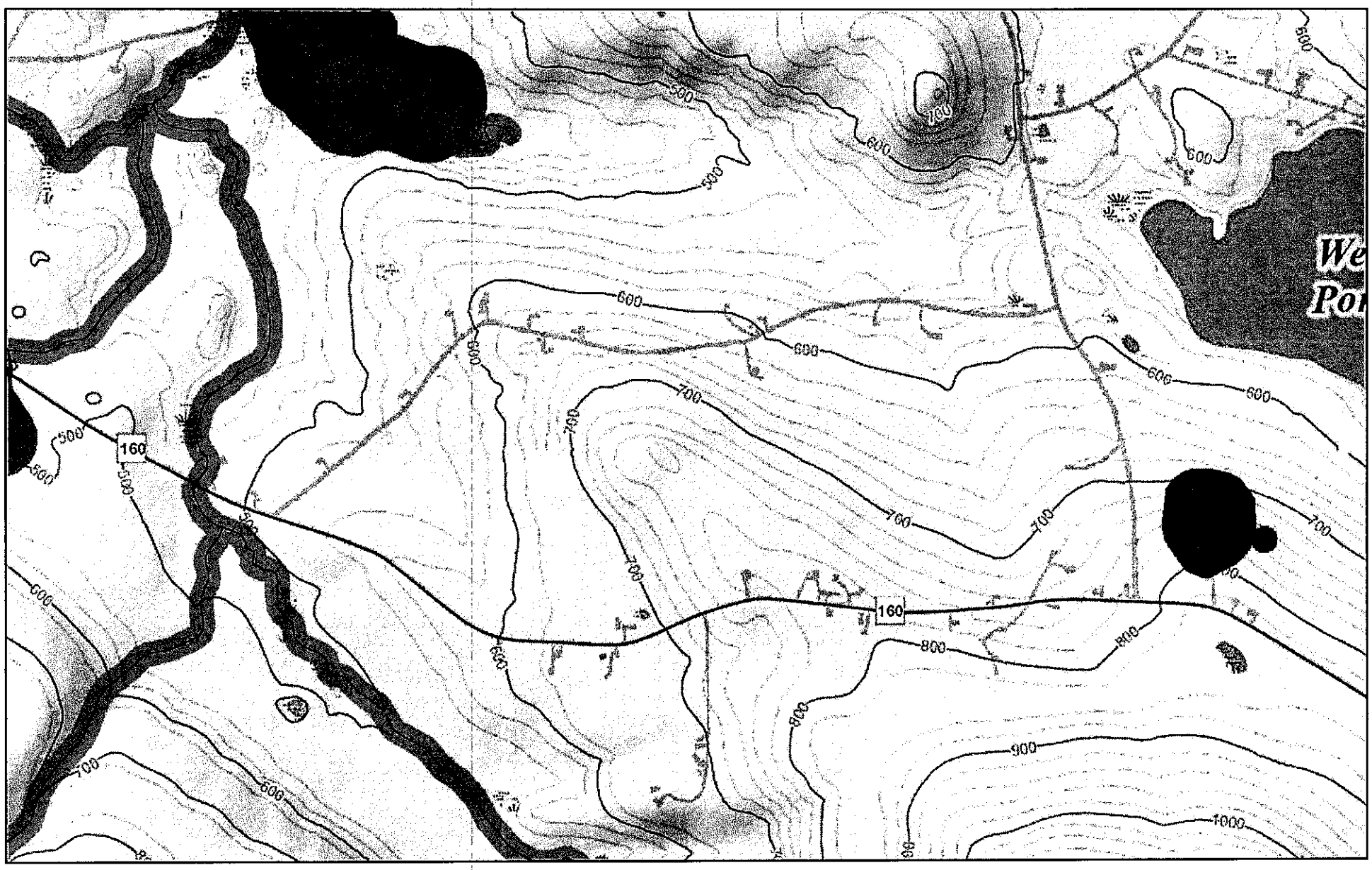

August 23, 2017

- Rare Plant Locations
- Natural Communities
- Inland Wading Bird and Waterfowl Habitat
- btrout

1:18,056

0 0.15 0.3 0.6 mi

0 0.175 0.35 0.7 km

State of Maine
Department of Transportation

Entrance / Driveway Details

PLAN

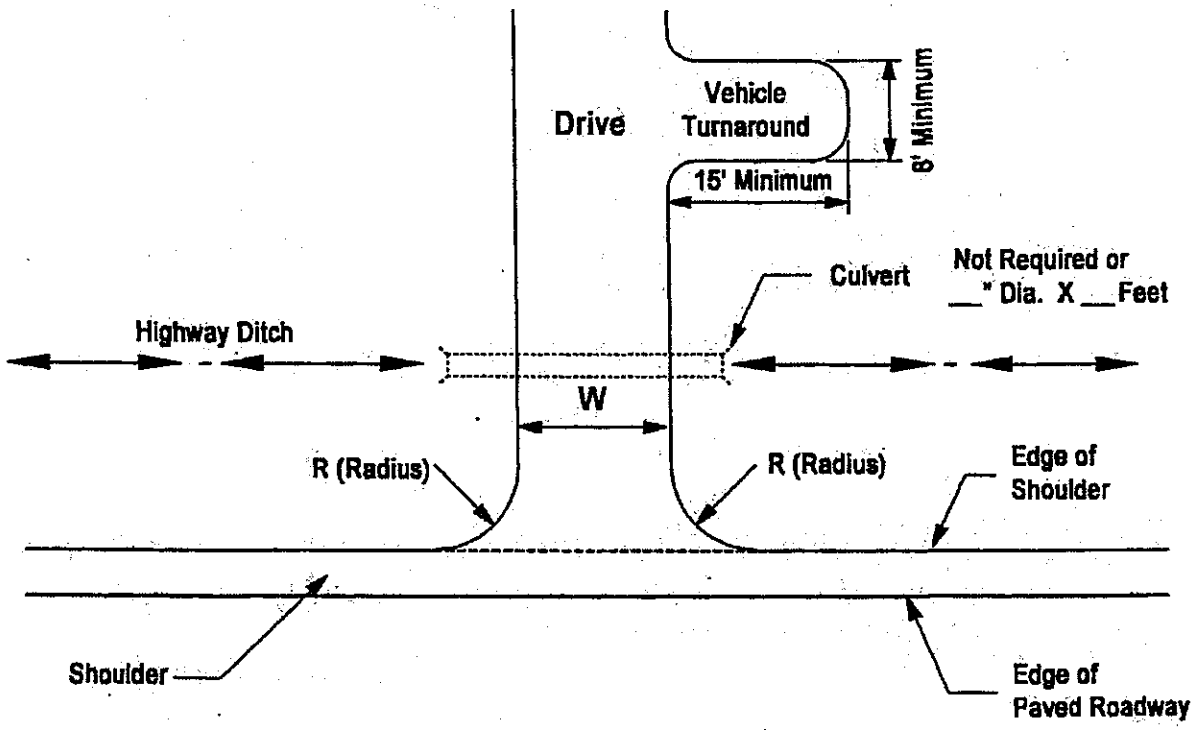

GENERAL NOTES -

1. ALL RESIDENTAL OR COMMERCIAL DRIVES WITH 10% GRADE OR MORE SLOPING DOWN TOWARDS THE HIGHWAY SHALL BE PAVED TO THE RIGHT OF WAY LINE, AS A MINIMUM, INCUDING SHOULDER, IF GRAVEL AND HAVE DITCHES TO CONTROL RUNOFF.
2. DRIVES SLOPING TO THE HIGHWAY SHALL BE CROWNED (1/2" PER FT. MINIMUM).
3. TO THE MAXIMUM EXTENT PRACTICAL, THE ENTRANCE MUST BE CONSTRUCTED PERPENDICULAR TO THE HIGHWAY AT THE POINT OF ACCESS. EXCEPT WHERE CURBING EXISTS OR IS PROPOSED, THE MINIMUM RADIUS ON THE EDGES OF THE ENTRANCE MUST BE 10 FEET OR AS OTHERWISE REQUIRED AS SHOWN.
4. ENTRANCES/DRIVEWAYS WILL BE BUILT WITH AN ADEQUATE TURN-AROUND AREA ON SITE TO ALLOW ALL VEHICLES TO MANUVER AND PARK WITHOUT BACKING ONTO THE HIGHWAY. THIS TURN-AROUND SHALL BE AT LEAST 8 FEET WIDE BY 15 FEET LONG.
5. ENTRANCES/DRIVEWAYS AND OTHER ASSOCIATED SITE WORK WHICH DIRECTS WATER (RUNOFF) TOWARD THE HIGHWAY MUST BE CONSTRUCTED, CROWNED STABILIZED AND MAINTAINED WITH MATERIALS AND APPROPRIATE TEMPORARY/PERMANENT EROSION CONTROL MATERIALS IN ACCORDANCE WITH MDOT BEST MANAGEMENT PRACTICES.
6. THE PROFILE OF THE ENTRANCES MUST COMPLY WITH THE DETAILS SHOWN ON PAGE 2.

Maine Department of Transportation

Paul R. LePage
Governor

Driveway/Entrance Permit

David Bernhardt, P.E,
Commissioner

Permit Number: 25574 - Entrance ID: 1

OWNER

Name: NATESELLSREALESTATE, LLC
Address: P.O. Box 321
Cornish, ME 04020
Telephone:

Date Printed: January 25, 2018

LOCATION

Route:	0160X, North Road
Municipality:	Parsonsfield
County:	York
Tax Map:	R08 Lot Number: 37
Culvert Size:	15 inches
Culvert Type:	plastic
Culvert Length:	26 feet
Date of Permit:	January 25, 2018
Approved Entrance Width:	15 feet

In accordance with rules promulgated under 23 M.R.S.A., Chapter 13, Subchapter I, Section 704, the Maine Departme of Transportation (MaineDOT) approves a permit and grants permission to perform the necessary grading to construct, in accordance with sketch or attached plan, **a Driveway to Two Single Family Dwellings** at a point **1495** feet **East** fro **Hussey Road**, subject to the Chapter 299 Highway Driveway and Entrance Rules, standard conditions and special conditions (if any) listed below.

Conditions of Approval:

This Permittee acknowledges and agrees to comply with the Standard Conditions and Approval attached hereto and to any Specific Conditions of Approval shown here.

(G = GPS Location; W = Waiver; S = Special Condition)

G - THE ENTRANCE SHALL BE LOCATED AT GPS COORDINATES: 43.746770N, -70.902850W.

S - In the town of Parsonsfield on the northerly side of Route 160 / North Road, the centerline being approximately 1495 feet easterly of the centerline of Hussey Road and approximately 26 feet westerly of utility pole 105.

S - The culvert shall be HDPE smoothbore plastic pipe. Ditching on either side of the pipe is likely required but will need to be determined after snow melt. The Property Owner must contact MaineDOT at (207) 324-5322 prior to driveway and culvert installation to discuss ditching requirements and arrange an inspection.

Approved by: Anthony Fontaine Date: 1-25-2018

STANDARD CONDITIONS AND APPROVAL

1. Provide, erect and maintain all necessary barricades, lights, warning signs and other devices as directed by MaineDOT to properly safeguard traffic while the construction is in progress.

2. At no time cause the highway to be closed to traffic

3. Where the driveway is located within a curb, curb and gutter, and/or sidewalk section, completely remove the existing curb, curb and gutter, and/or sidewalk as may be required to create the driveway and restore drainage. All driveways abutting sidewalk sections shall meet the requirements set forth in the Americans with Disabilities Act of 1990, 42 U.S.C. Sec. 12131 et seq.

4. Obtain, have delivered to the site, and install any culverts and/or drainage structures which may be necessary for drainage, the size, type and length as called for in the permit pursuant to 23 M.R.S.A. Sec. 705. All culverts and/or drainage structures shall be new.

5. Start construction of the proposed driveway within twenty-four (24) months of the date of permit issuance and substantially complete construction of the proposed driveway within twelve months of commencement of construction.

6. Comply with all applicable federal, state and municipal regulations and ordinances.

7. Do not alter, without the express written consent of the MaineDOT, any culverts or drainage swales within the MaineDOT right of way.

8. File a copy of the approved driveway permit with the affected municipality or LURC, as appropriate within 5 business days of receiving the MaineDOT approval.

9. Construct and maintain the driveway side slopes to be no steeper than the adjacent roadway side slopes, but in no case to be steeper than 3 horizontal to 1 vertical, unless the side slope is behind existing roadway guardrail, in which case it shall be no steeper than 2 horizontal to 1 vertical.

10. Notify the MaineDOT of a proposed change of use served by the driveway when increase in traffic flow is expected to occur. This does no exempt the need for obtaining a Traffic Movement Permit (TMP) if trip generation meets or exceeds 100 passenger car equivalents (PCE) dur the peak hour of the day.

11. Construct or implement and maintain erosion and sedimentation measures sufficient to protect MaineDOT facilities.

12. Driveways shall be designed such that all maneuvering and parking of any vehicles will take place outside the highway right-of-way and where vehicles will exit the premises without backing onto the highway traveled way or shoulders. All driveways will have a turnaround area accomodate vehicles using the premises.

FURTHER CONDITION OF THE PERMIT

The owner shall assume, the defense of, and pay all damages, fines, and penalties for which he/she shall become liable, and shall indemnify an safe harmless said Department, its representatives, agents and employees from liability, actions against all suits, claims, damages for wrongful death, personal injuries or property damage suffered by any person or association which results from the willful or negligent action or inactior the owner/applicant (agent) and in proceedings of every kind arising out of the construction and maintenance of said entrance(s), including sn removal.

Nothing herein shall, nor is intended to, waive any defense, immunity or limitation of liability which may be available to the MaineDOT, the officers, agents or employees under the Maine Tort Claims Act or any other privileges and/or immunities provided by law. It is a further condition that the owner will agree to keep the right of way inviolate for public highway purposes and no signs (other than traffic signs and signals), posters, billboards, roadside stands, culvert end walls or private installations shall be permitted within Right of Way limits.

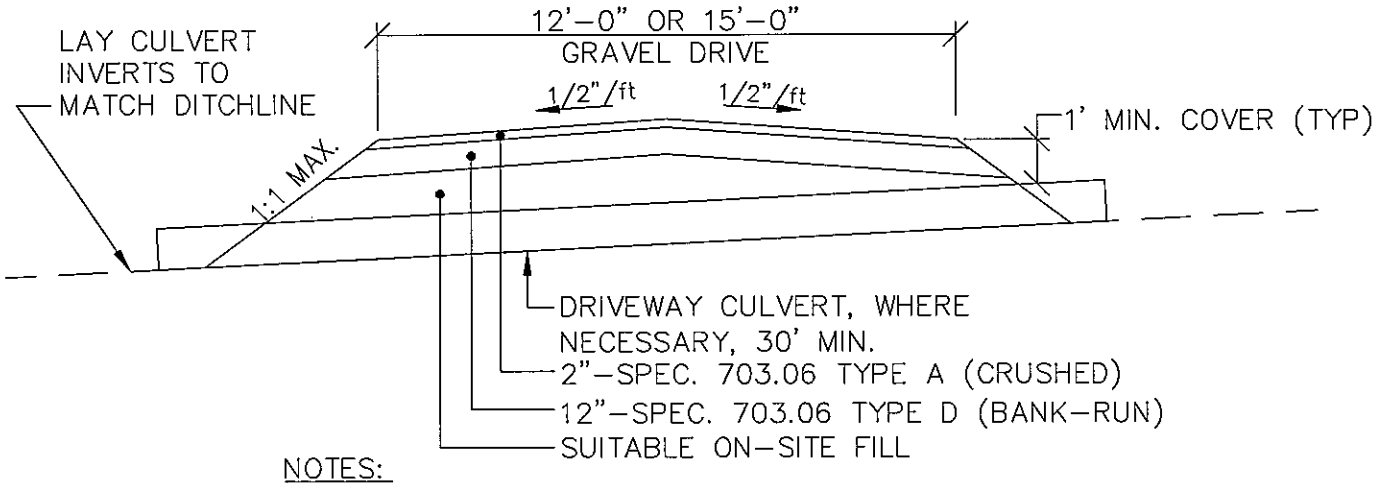

NOTES:

1. SINGLE-FAMILY DRIVEWAY TO BE 12' MIN. WIDTH.
2. COMMON / SHARED DRIVEWAY TO BE 15' MIN. WIDTH.

1 TYPICAL DRIVEWAY W/ CULVERT DETAIL

NOT TO SCALE

WALSH
ENGINEERING ASSOCIATES, INC.
One Karen Dr., Suite 2A | Westbrook, Maine 04092
ph: 207.553.9898 | www.walsh-eng.com

WATSON WOODS SUBDIVISION

NORTH ROAD & HUSSEY ROAD
PARSONSFIELD, MAINE

Sheet Title:	TYPICAL DRIVEWAY
Job No.:	16149
Date:	4/19/18
Scale:	AS SHOWN
Drawn:	JWG
Checked:	

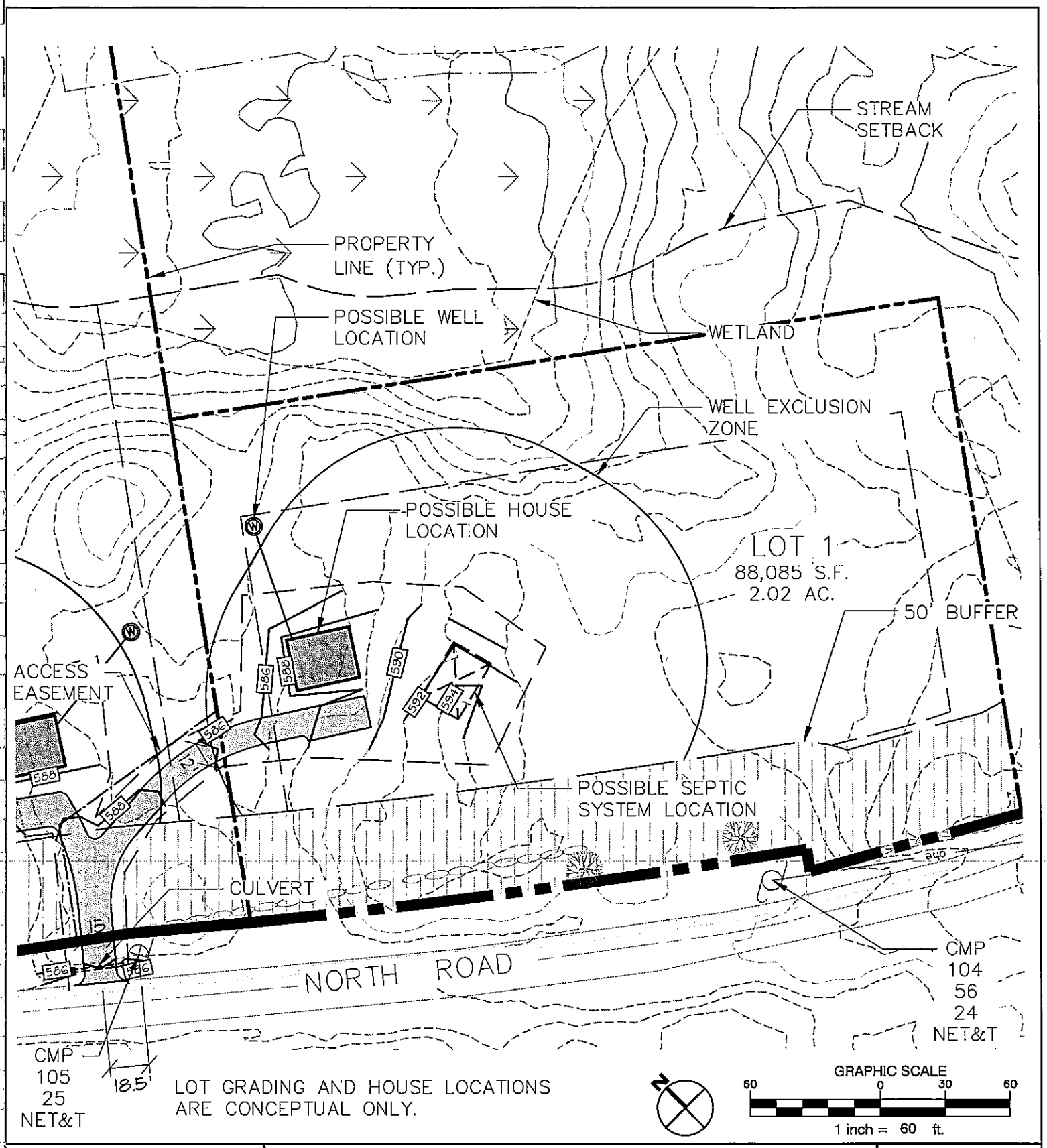

WALSH
ENGINEERING ASSOCIATES, INC.

One Karen Dr., Suite 2A | Westbrook, Maine 04092
ph: 207.553.9898 | www.walsh-eng.com

WATSON WOODS SUBDIVISION

NORTH ROAD & HUSSEY ROAD
PARSONSFIELD, MAINE

Sheet Title: **LOT 1**

Job No.:	16149
Date:	4/19/18
Scale:	AS SHOWN
Drawn:	JWG
Checked:	

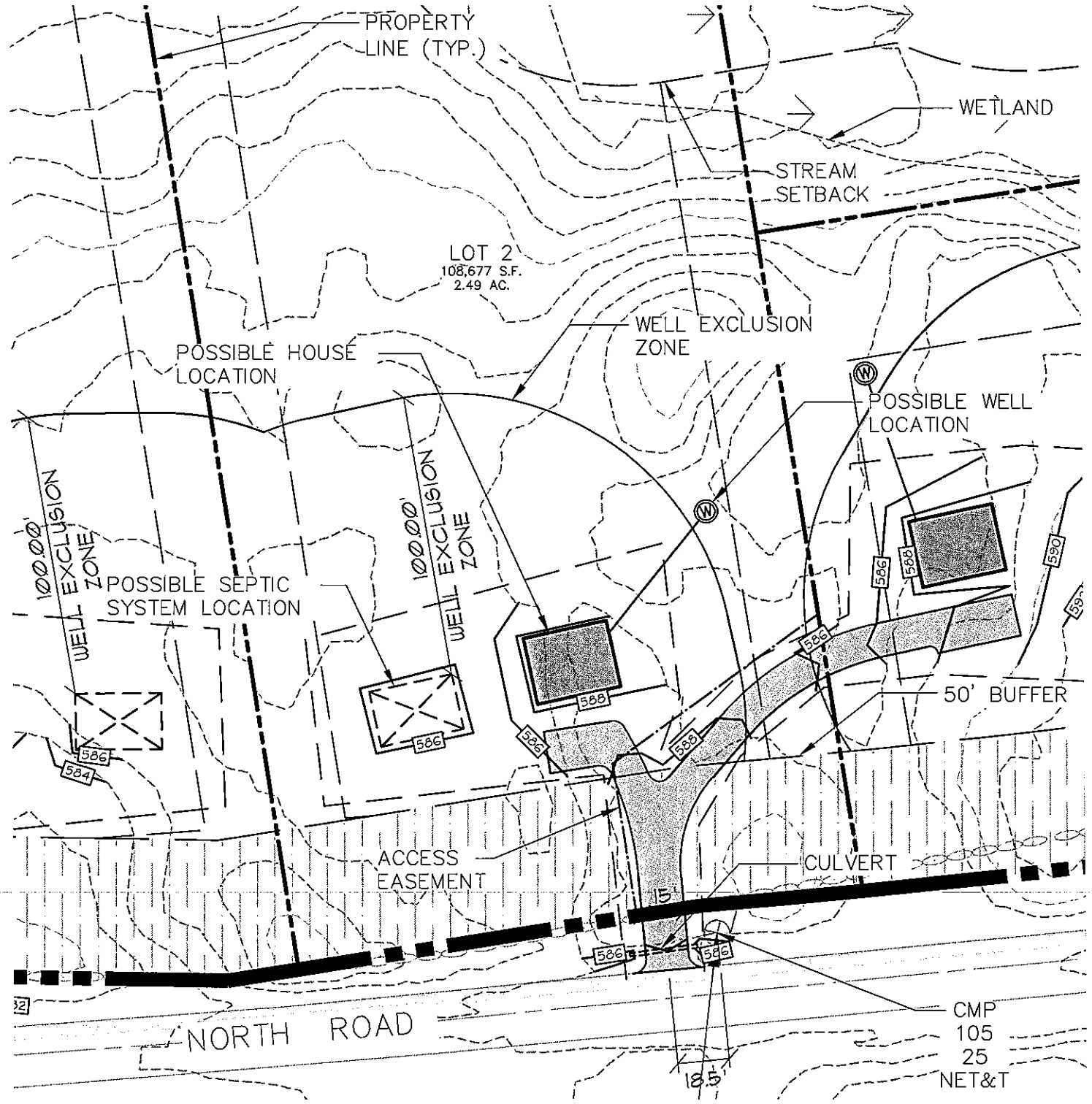

LOT GRADING AND HOUSE LOCATIONS ARE CONCEPTUAL ONLY.

WALSH
ENGINEERING ASSOCIATES, INC.
One Karen Dr., Suite 2A | Westbrook, Maine 04092
ph: 207.553.9898 | www.walsh-eng.com

WATSON WOODS SUBDIVISION

NORTH ROAD & HUSSEY ROAD
PARSONSFIELD, MAINE

Sheet Title:	LOT 2
Job No.:	16149
Date:	4/19/18
Scale:	AS SHOWN
Drawn:	JWG
Checked:	

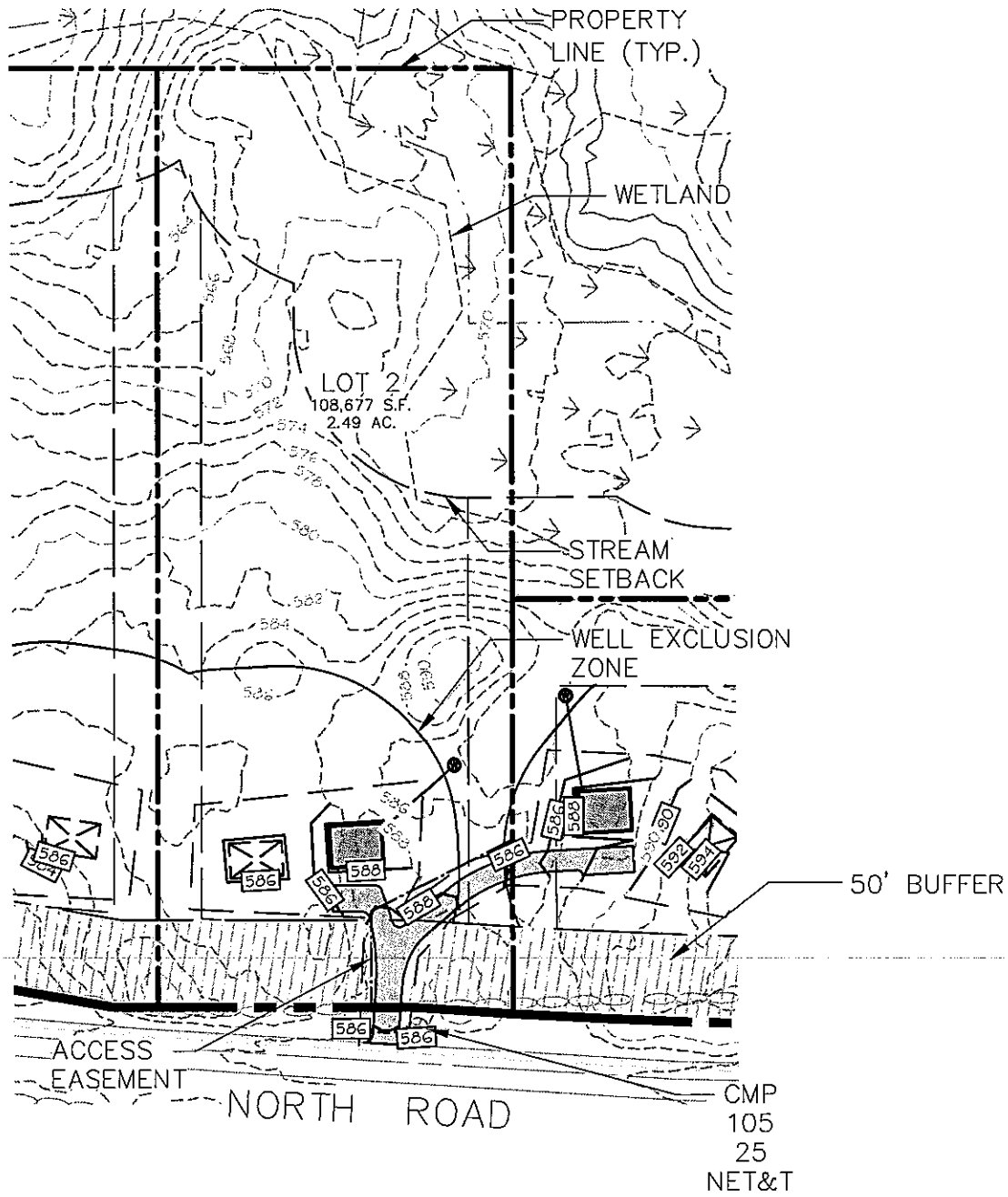

LOT GRADING AND HOUSE LOCATIONS ARE CONCEPTUAL ONLY.

GRAPHIC SCALE

50 0 25 50

1 inch = 50 ft.

WALSH
ENGINEERING ASSOCIATES, INC.

One Karen Dr., Suite 2A | Westbrook, Maine 04092
ph: 207.553.9898 | www.walsh-eng.com

WATSON WOODS SUBDIVISION

NORTH ROAD & HUSSEY ROAD
PARSONSFIELD, MAINE

Sheet Title:	LOT 2
Job No.:	16149
Date:	4/19/18
Scale:	AS SHOWN
Drawn:	JWG
Checked:	

Maine Department of Transportation

Paul R. LePage
Governor

Driveway/Entrance Permit

David Bernhardt, P.E,
Commissioner

Permit Number: 25575 - Entrance ID: 1

OWNER

Name: **NATESELLSREALESTATE, LLC**
Address: **P.O. Box 321**
Cornish, ME 04020
Telephone:

Date Printed: **January 25, 2018**

LOCATION

Route:	**0160X, North Road**
Municipality:	**Parsonsfield**
County:	**York**
Tax Map:	**R08 Lot Number: 37**
Culvert Size:	**15 inches**
Culvert Type:	**plastic**
Culvert Length:	**24 feet**
Date of Permit:	**January 25, 2018**
Approved Entrance Width:	**12 feet**

In accordance with rules promulgated under 23 M.R.S.A., Chapter 13, Subchapter I, Section 704, the Maine Departme of Transportation (MaineDOT) approves a permit and grants permission to perform the necessary grading to construct, in accordance with sketch or attached plan, **a Driveway** to **Single Family Dwelling** at a point **1199** feet **East** from **Hussey Road**, subject to the Chapter 299 Highway Driveway and Entrance Rules, standard conditions and special conditions (if any) listed below.

Conditions of Approval:

This Permittee acknowledges and agrees to comply with the Standard Conditions and Approval attached hereto and to any Specific Conditions of Approval shown here.

(G = GPS Location; W = Waiver; S = Special Condition)

G - THE ENTRANCE SHALL BE LOCATED AT GPS COORDINATES: 43.747340N, -70.903790W.

S - In the town of Parsonsfield on the northerly side of Route 160 / North Road, the centerline being approximately 1199 feet easterly of the centerline of Hussey Road and approximately 15 feet westerly of utility pole 106.

S - The culvert shall be HDPE smoothbore plastic pipe. Ditching on either side of the pipe is likely required but will need to be determined after snow melt. The Property Owner must contact MaineDOT at (207) 324-5322 prior to driveway and culvert installation to discuss ditching requirements and arrange an inspection.

S -

Approved by: Anthony Fontaine Date: 1-25-2018

STANDARD CONDITIONS AND APPROVAL

1. Provide, erect and maintain all necessary barricades, lights, warning signs and other devices as directed by MaineDOT to properly safeguard traffic while the construction is in progress.

2. At no time cause the highway to be closed to traffic

3. Where the driveway is located within a curb, curb and gutter, and/or sidewalk section, completely remove the existing curb, curb and gutter, and/or sidewalk as may be required to create the driveway and restore drainage. All driveways abutting sidewalk sections shall meet the requirements set forth in the Americans with Disabilities Act of 1990, 42 U.S.C. Sec. 12131 et seq.

4. Obtain, have delivered to the site, and install any culverts and/or drainage structures which may be necessary for drainage, the size, type and length as called for in the permit pursuant to 23 M.R.S.A. Sec. 705. All culverts and/or drainage structures shall be new.

5. Start construction of the proposed driveway within twenty-four (24) months of the date of permit issuance and substantially complete construction of the proposed driveway within twelve months of commencement of construction.

6. Comply with all applicable federal, state and municipal regulations and ordinances.

7. Do not alter, without the express written consent of the MaineDOT, any culverts or drainage swales within the MaineDOT right of way.

8. File a copy of the approved driveway permit with the affected municipality or LURC, as appropriate within 5 business days of receiving the MaineDOT approval.

9. Construct and maintain the driveway side slopes to be no steeper than the adjacent roadway side slopes, but in no case to be steeper than 3 horizontal to 1 vertical, unless the side slope is behind existing roadway guardrail, in which case it shall be no steeper than 2 horizontal to 1 vertical.

10. Notify the MaineDOT of a proposed change of use served by the driveway when increase in traffic flow is expected to occur. This does no exempt the need for obtaining a Traffic Movement Permit (TMP) if trip generation meets or exceeds 100 passenger car equivalents (PCE) dur the peak hour of the day.

11. Construct or implement and maintain erosion and sedimentation measures sufficient to protect MaineDOT facilities.

12. Driveways shall be designed such that all maneuvering and parking of any vehicles will take place outside the highway right-of-way and where vehicles will exit the premises without backing onto the highway traveled way or shoulders. All driveways will have a turnaround area accomodate vehicles using the premises.

FURTHER CONDITION OF THE PERMIT

The owner shall assume, the defense of, and pay all damages, fines, and penalties for which he/she shall become liable, and shall indemnify an safe harmless said Department, its representatives, agents and employees from liability, actions against all suits, claims, damages for wrongful death, personal injuries or property damage suffered by any person or association which results from the willful or negligent action or inaction the owner/applicant (agent) and in proceedings of every kind arising out of the construction and maintenance of said entrance(s), including sn removal.

Nothing herein shall, nor is intended to, waive any defense, immunity or limitation of liability which may be available to the MaineDOT, the officers, agents or employees under the Maine Tort Claims Act or any other privileges and/or immunities provided by law. It is a further condition that the owner will agree to keep the right of way inviolate for public highway purposes and no signs (other than traffic signs and signals), posters, billboards, roadside stands, culvert end walls or private installations shall be permitted within Right of Way limits.

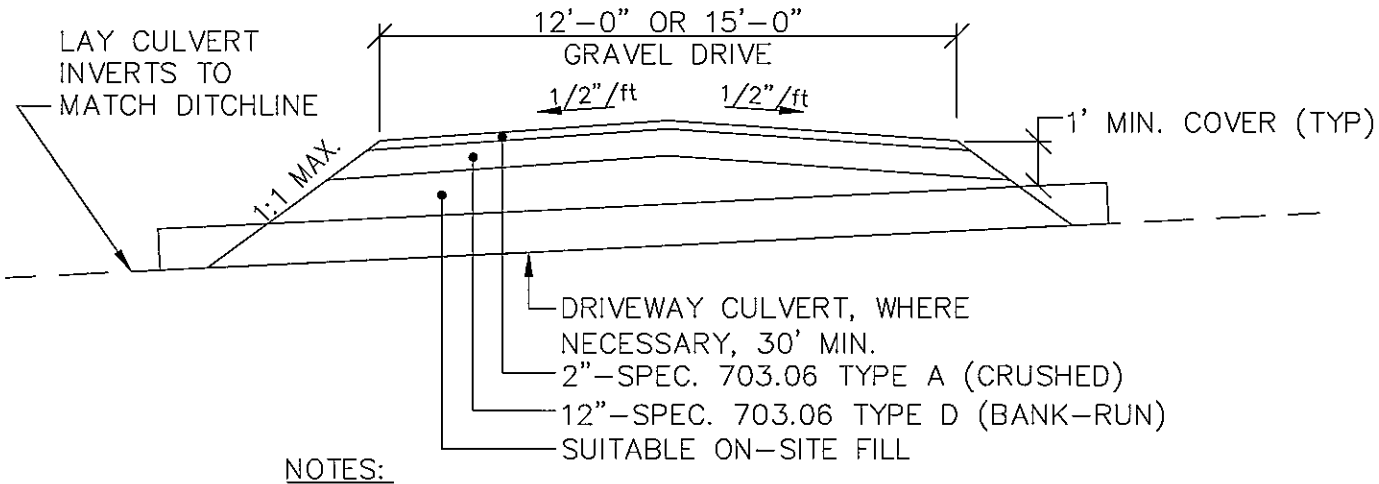

NOTES:

1. SINGLE-FAMILY DRIVEWAY TO BE 12' MIN. WIDTH.
2. COMMON / SHARED DRIVEWAY TO BE 15' MIN. WIDTH.

1 TYPICAL DRIVEWAY W/ CULVERT DETAIL

NOT TO SCALE

WALSH
ENGINEERING ASSOCIATES, INC.
One Karen Dr., Suite 2A | Westbrook, Maine 04092
ph: 207.553.9898 | www.walsh-eng.com

WATSON WOODS SUBDIVISION

NORTH ROAD & HUSSEY ROAD
PARSONSFIELD, MAINE

Sheet Title:	TYPICAL DRIVEWAY
Job No.:	16149
Date:	4/19/18
Scale:	AS SHOWN
Drawn:	JWG
Checked:	

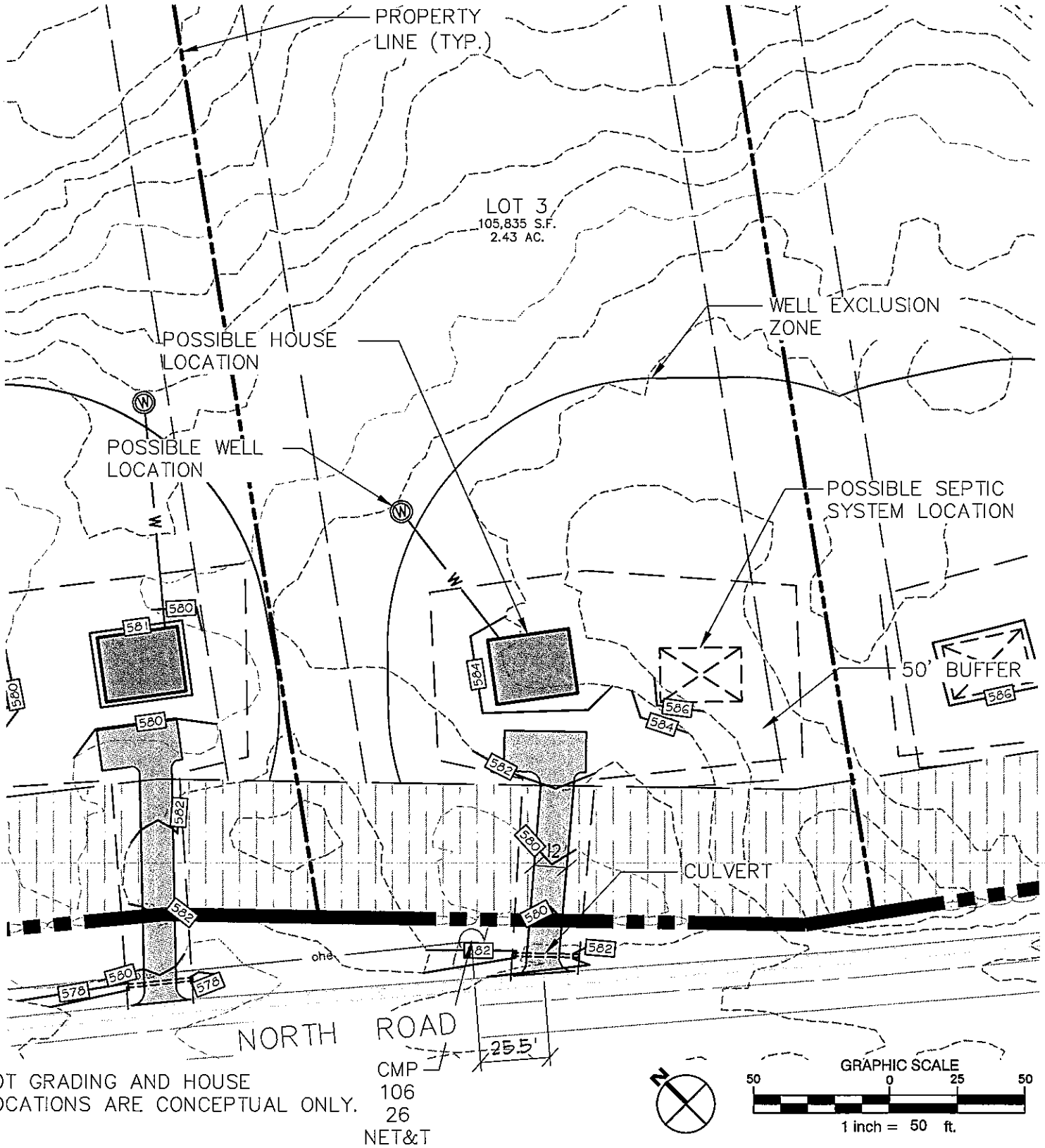

LOT GRADING AND HOUSE LOCATIONS ARE CONCEPTUAL ONLY.

WALSH
ENGINEERING ASSOCIATES, INC.
One Karen Dr., Suite 2A | Westbrook, Maine 04092
ph: 207.553.9898 | www.walsh-eng.com

WATSON WOODS SUBDIVISION

NORTH ROAD & HUSSEY ROAD
PARSONSFIELD, MAINE

Sheet Title: **LOT 3**

Job No.:	16149
Date:	4/19/18
Scale:	AS SHOWN
Drawn:	JWG
Checked:	

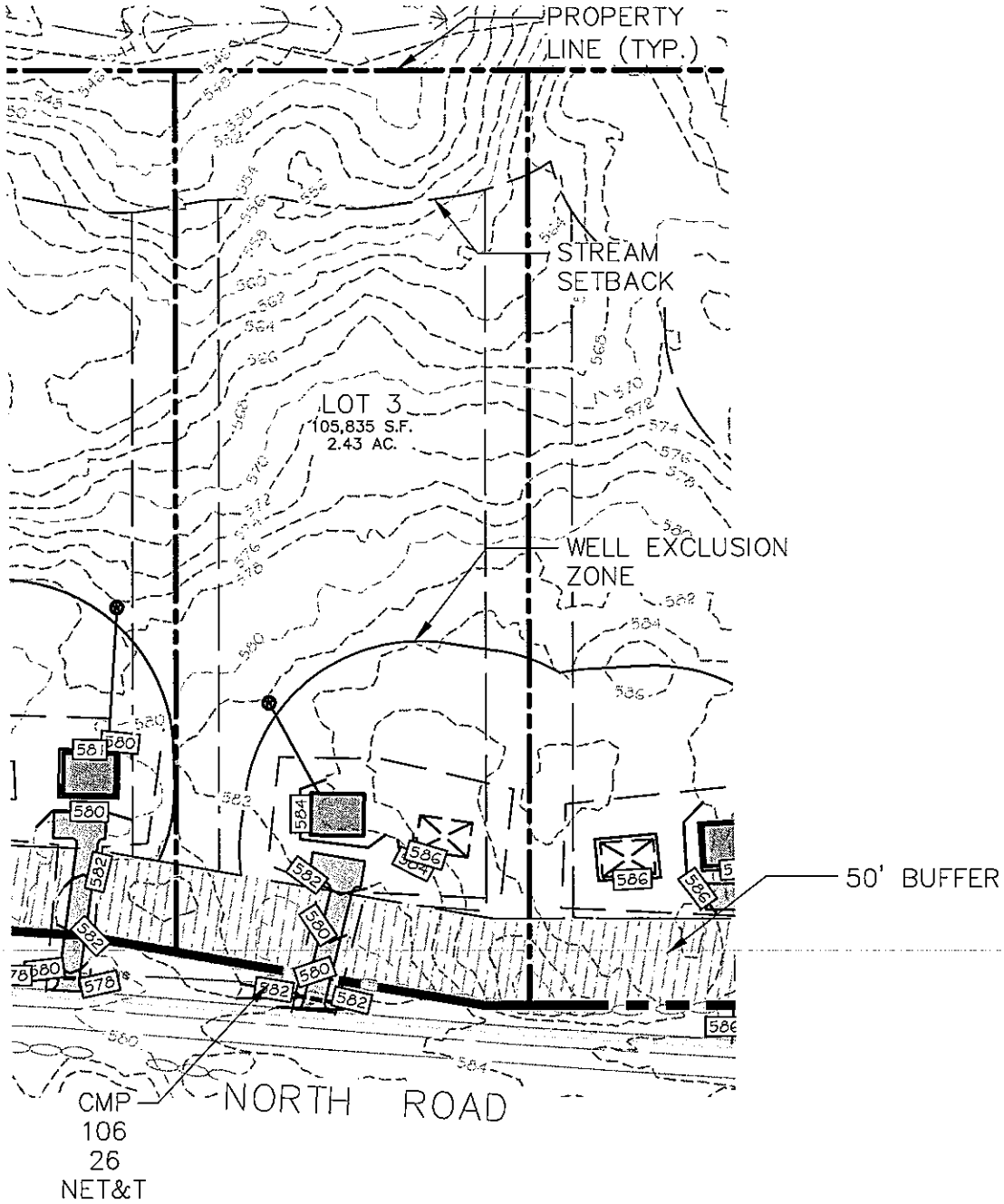

LOT GRADING AND HOUSE LOCATIONS ARE CONCEPTUAL ONLY.

GRAPHIC SCALE

50 0 25 50

1 inch = 50 ft.

WALSH
ENGINEERING ASSOCIATES, INC.

One Karen Dr., Suite 2A | Westbrook, Maine 04092
ph: 207.553.9898 | www.walsh-eng.com

WATSON WOODS SUBDIVISION

NORTH ROAD & HUSSEY ROAD
PARSONSFIELD, MAINE

Sheet Title:	LOT 3
Job No.:	16149
Date:	4/19/18
Scale:	AS SHOWN
Drawn:	JWG
Checked:	

Maine Department of Transportation

Paul R. LePage
Governor

Driveway/Entrance Permit

David Bernhardt, P.E,
Commissioner

Permit Number: 25576 - Entrance ID: 1

OWNER

Name: **NATESELLSREALESTATE, LLC**
Address: **P.O. Box 321**
Cornish, ME 04020
Telephone:

Date Printed: **January 25, 2018**

LOCATION

Route:	**0160X, North Road**
Municipality:	**Parsonsfield**
County:	**York**
Tax Map:	**R08 Lot Number: 37**
Culvert Size:	**15 inches**
Culvert Type:	**plastic**
Culvert Length:	**24 feet**
Date of Permit:	**January 25, 2018**
Approved Entrance Width:	**12 feet**

In accordance with rules promulgated under 23 M.R.S.A., Chapter 13, Subchapter I, Section 704, the Maine Departme of Transportation (MaineDOT) approves a permit and grants permission to perform the necessary grading to construct, in accordance with sketch or attached plan, **a Driveway** to **Single Family Dwelling** at a point **1104** feet **East** from **Hussey Road**, subject to the Chapter 299 Highway Driveway and Entrance Rules, standard conditions and special conditions (if any) listed below.

Conditions of Approval:

This Permittee acknowledges and agrees to comply with the Standard Conditions and Approval attached hereto and to any Specific Conditions of Approval shown here.

(G = GPS Location; W = Waiver; S = Special Condition)

G - THE ENTRANCE SHALL BE LOCATED AT GPS COORDINATES: 43.747520N, -70.904100W.

S - In the town of Parsonsfield on the northerly side of Route 160 / North Road, the centerline being approximately 1104 feet easterly of the centerline of Hussey Road and approximately 189 feet easterly of utility pole 107.

S - The culvert shall be HDPE smoothbore plastic pipe. Ditching on either side of the pipe is likely required but will need to be determined after snow melt. The Property Owner must contact MaineDOT at (207) 324-5322 prior to driveway and culvert installation to discuss ditching requirements and arrange an inspection.

Approved by: Anthony Fontaine Date: 1-25-2018

STANDARD CONDITIONS AND APPROVAL

1. Provide, erect and maintain all necessary barricades, lights, warning signs and other devices as directed by MaineDOT to properly safeguard traffic while the construction is in progress.

2. At no time cause the highway to be closed to traffic

3. Where the driveway is located within a curb, curb and gutter, and/or sidewalk section, completely remove the existing curb, curb and gutter, and/or sidewalk as may be required to create the driveway and restore drainage. All driveways abutting sidewalk sections shall meet the requirements set forth in the Americans with Disabilities Act of 1990, 42 U.S.C. Sec. 12131 et seq.

4. Obtain, have delivered to the site, and install any culverts and/or drainage structures which may be necessary for drainage, the size, type and length as called for in the permit pursuant to 23 M.R.S.A. Sec. 705. All culverts and/or drainage structures shall be new.

5. Start construction of the proposed driveway within twenty-four (24) months of the date of permit issuance and substantially complete construction of the proposed driveway within twelve months of commencement of construction.

6. Comply with all applicable federal, state and municipal regulations and ordinances.

7. Do not alter, without the express written consent of the MaineDOT, any culverts or drainage swales within the MaineDOT right of way.

8. File a copy of the approved driveway permit with the affected municipality or LURC, as appropriate within 5 business days of receiving the MaineDOT approval.

9. Construct and maintain the driveway side slopes to be no steeper than the adjacent roadway side slopes, but in no case to be steeper than 3 horizontal to 1 vertical, unless the side slope is behind existing roadway guardrail, in which case it shall be no steeper than 2 horizontal to 1 vertical.

10. Notify the MaineDOT of a proposed change of use served by the driveway when increase in traffic flow is expected to occur. This does no exempt the need for obtaining a Traffic Movement Permit (TMP) if trip generation meets or exceeds 100 passenger car equivalents (PCE) dur the peak hour of the day.

11. Construct or implement and maintain erosion and sedimentation measures sufficient to protect MaineDOT facilities.

12. Driveways shall be designed such that all maneuvering and parking of any vehicles will take place outside the highway right-of-way and where vehicles will exit the premises without backing onto the highway traveled way or shoulders. All driveways will have a turnaround area accomodate vehicles using the premises.

FURTHER CONDITION OF THE PERMIT

The owner shall assume, the defense of, and pay all damages, fines, and penalties for which he/she shall become liable, and shall indemnify an safe harmless said Department, its representatives, agents and employees from liability, actions against all suits, claims, damages for wrongful death, personal injuries or property damage suffered by any person or association which results from the willful or negligent action or inactior the owner/applicant (agent) and in proceedings of every kind arising out of the construction and maintenance of said entrance(s), including sn removal.

Nothing herein shall, nor is intended to, waive any defense, immunity or limitation of liability which may be available to the MaineDOT, the officers, agents or employees under the Maine Tort Claims Act or any other privileges and/or immunities provided by law. It is a further condition that the owner will agree to keep the right of way inviolate for public highway purposes and no signs (other than traffic signs and signals), posters, billboards, roadside stands, culvert end walls or private installations shall be permitted within Right of Way limits.

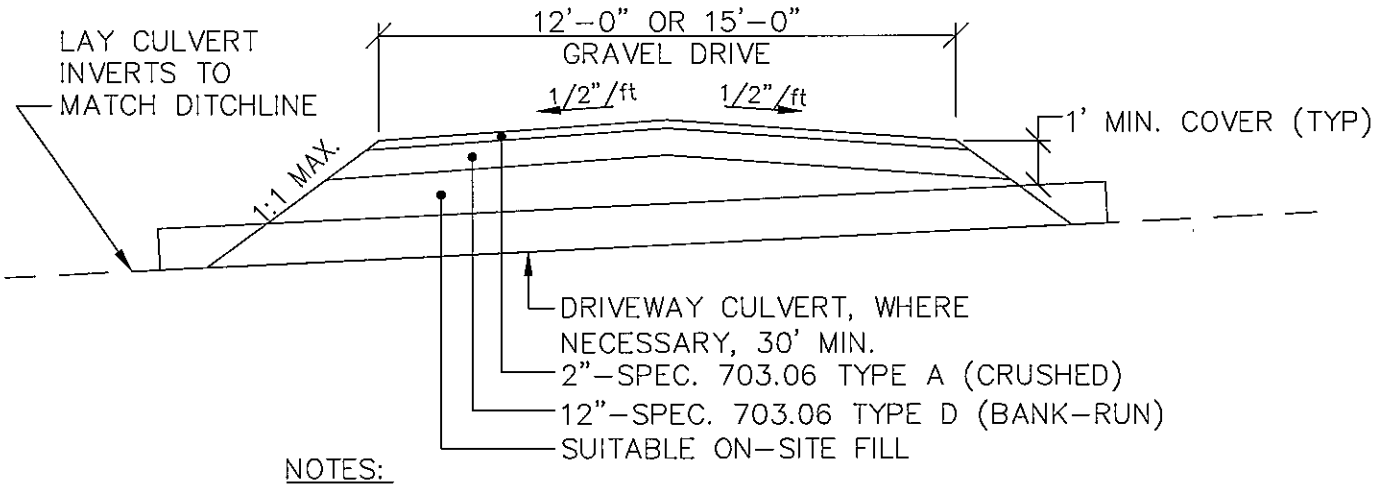

NOTES:

1. SINGLE-FAMILY DRIVEWAY TO BE 12' MIN. WIDTH.
2. COMMON / SHARED DRIVEWAY TO BE 15' MIN. WIDTH.

1 TYPICAL DRIVEWAY W/ CULVERT DETAIL

NOT TO SCALE

WALSH
ENGINEERING ASSOCIATES, INC.
One Karen Dr., Suite 2A | Westbrook, Maine 04092
ph: 207.553.9898 | www.walsh-eng.com

WATSON WOODS SUBDIVISION

NORTH ROAD & HUSSEY ROAD
PARSONSFIELD, MAINE

Sheet Title: TYPICAL DRIVEWAY

Job No.:	16149
Date:	4/19/18
Scale:	AS SHOWN
Drawn:	JWG
Checked:	

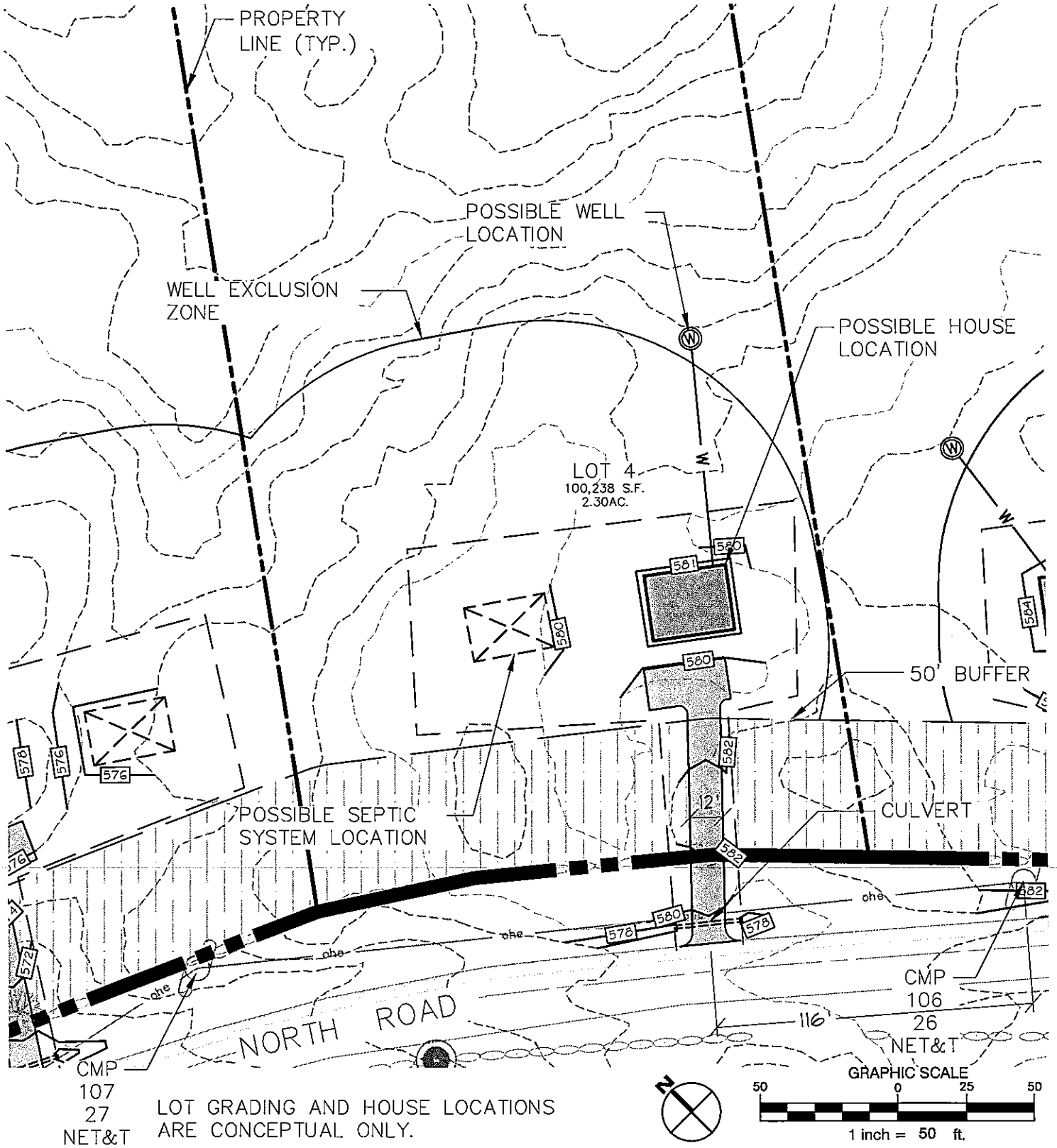

WALSH
ENGINEERING ASSOCIATES, INC.
One Karen Dr., Suite 2A | Westbrook, Maine 04092
ph: 207.553.9898 | www.walsh-eng.com

WATSON WOODS SUBDIVISION

NORTH ROAD & HUSSEY ROAD
PARSONSFIELD, MAINE

Sheet Title: **LOT 4**

Job No.:	16149
Date:	4/19/18
Scale:	AS SHOWN
Drawn:	JWG
Checked:	

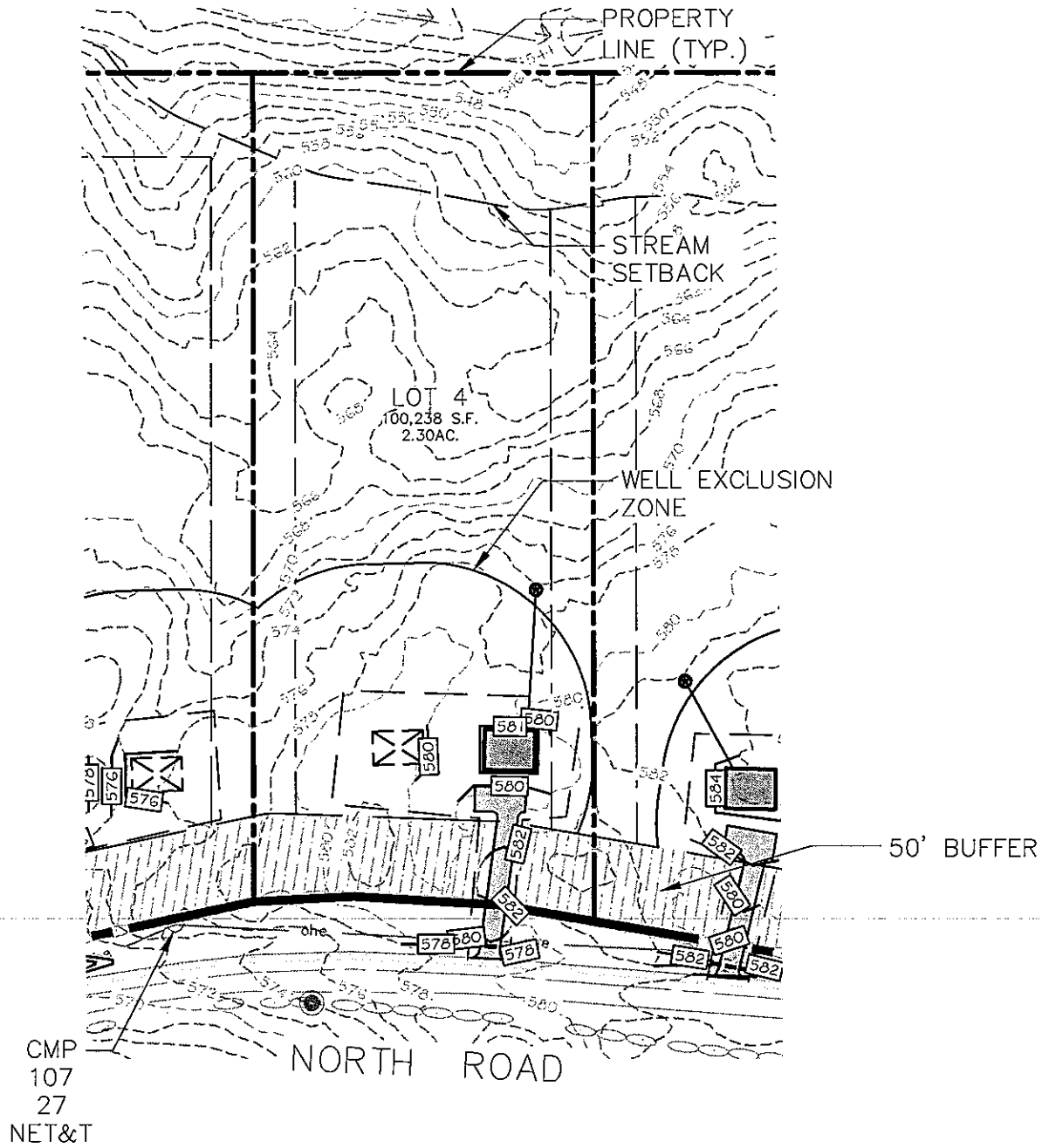

LOT GRADING AND HOUSE LOCATIONS ARE CONCEPTUAL ONLY.

GRAPHIC SCALE

50 0 25 50

1 inch = 50 ft.

WALSH
ENGINEERING ASSOCIATES, INC.

One Karen Dr., Suite 2A | Westbrook, Maine 04092
ph: 207.553.9898 | www.walsh-eng.com

WATSON WOODS SUBDIVISION

NORTH ROAD & HUSSEY ROAD
PARSONSFIELD, MAINE

Sheet Title: **LOT 4**

Job No.:	16149
Date:	4/19/18
Scale:	AS SHOWN
Drawn:	JWG
Checked:	

Maine Department of Transportation

Paul R. LePage
Governor

Driveway/Entrance Permit

David Bernhardt, P.E,
Commissioner

Permit Number: 25577 - Entrance ID: 1

OWNER

Name: NATESELLSREALESTATE, LLC
Address: P.O. Box 321
Cornish, ME 04020
Telephone:

Date Printed: January 25, 2018

LOCATION

Route:	0160X, North Road
Municipality:	Parsonsfield
County:	York
Tax Map:	R08 Lot Number: 37
Culvert Size:	15 inches
Culvert Type:	plastic
Culvert Length:	24 feet
Date of Permit:	January 25, 2018
Approved Entrance Width:	12 feet

In accordance with rules promulgated under 23 M.R.S.A., Chapter 13, Subchapter I, Section 704, the Maine Departme of Transportation (MaineDOT) approves a permit and grants permission to perform the necessary grading to construct, in accordance with sketch or attached plan, **a Driveway** to **Single Family Dwelling** at a point **844** feet **East** from **Hussey Road**, subject to the Chapter 299 Highway Driveway and Entrance Rules, standard conditions and special conditions (if any) listed below.

Conditions of Approval:

This Permittee acknowledges and agrees to comply with the Standard Conditions and Approval attached hereto and to any Specific Conditions of Approval shown here.

(G = GPS Location; W = Waiver; S = Special Condition)

G - THE ENTRANCE SHALL BE LOCATED AT GPS COORDINATES: 43.747880N, -70.904910W.

S - In the town of Parsonsfield on the northerly side of Route 160 / North Road, the centerline being approximately 844 feet easterly of the centerline of Hussey Road and approximately 70 feet westerly of utility pole 107.

S - The culvert shall be HDPE smoothbore plastic pipe. Ditching on either side of the pipe is likely required but will need to be determined after snow melt. The Property Owner must contact MaineDOT at (207) 324-5322 prior to driveway and culvert installation to discuss ditching requirements and arrange an inspection.

Approved by: Anthony Fontaine Date: 1-25-2018

STANDARD CONDITIONS AND APPROVAL

1. Provide, erect and maintain all necessary barricades, lights, warning signs and other devices as directed by MaineDOT to properly safeguard traffic while the construction is in progress.

2. At no time cause the highway to be closed to traffic

3. Where the driveway is located within a curb, curb and gutter, and/or sidewalk section, completely remove the existing curb, curb and gutter, and/or sidewalk as may be required to create the driveway and restore drainage. All driveways abutting sidewalk sections shall meet the requirements set forth in the Americans with Disabilities Act of 1990, 42 U.S.C. Sec. 12131 et seq.

4. Obtain, have delivered to the site, and install any culverts and/or drainage structures which may be necessary for drainage, the size, type and length as called for in the permit pursuant to 23 M.R.S.A. Sec. 705. All culverts and/or drainage structures shall be new.

5. Start construction of the proposed driveway within twenty-four (24) months of the date of permit issuance and substantially complete construction of the proposed driveway within twelve months of commencement of construction.

6. Comply with all applicable federal, state and municipal regulations and ordinances.

7. Do not alter, without the express written consent of the MaineDOT, any culverts or drainage swales within the MaineDOT right of way.

8. File a copy of the approved driveway permit with the affected municipality or LURC, as appropriate within 5 business days of receiving the MaineDOT approval.

9. Construct and maintain the driveway side slopes to be no steeper than the adjacent roadway side slopes, but in no case to be steeper than 3 horizontal to 1 vertical, unless the side slope is behind existing roadway guardrail, in which case it shall be no steeper than 2 horizontal to 1 vertical.

10. Notify the MaineDOT of a proposed change of use served by the driveway when increase in traffic flow is expected to occur. This does no exempt the need for obtaining a Traffic Movement Permit (TMP) if trip generation meets or exceeds 100 passenger car equivalents (PCE) duri the peak hour of the day.

11. Construct or implement and maintain erosion and sedimentation measures sufficient to protect MaineDOT facilities.

12. Driveways shall be designed such that all maneuvering and parking of any vehicles will take place outside the highway right-of-way and where vehicles will exit the premises without backing onto the highway traveled way or shoulders. All driveways will have a turnaround area accomodate vehicles using the premises.

FURTHER CONDITION OF THE PERMIT

The owner shall assume, the defense of, and pay all damages, fines, and penalties for which he/she shall become liable, and shall indemnify an safe harmless said Department, its representatives, agents and employees from liability, actions against all suits, claims, damages for wrongful death, personal injuries or property damage suffered by any person or association which results from the willful or negligent action or inaction the owner/applicant (agent) and in proceedings of every kind arising out of the construction and maintenance of said entrance(s), including sn removal.

Nothing herein shall, nor is intended to, waive any defense, immunity or limitation of liability which may be available to the MaineDOT, thei officers, agents or employees under the Maine Tort Claims Act or any other privileges and/or immunities provided by law. It is a further condition that the owner will agree to keep the right of way inviolate for public highway purposes and no signs (other than traffic signs and signals), posters, billboards, roadside stands, culvert end walls or private installations shall be permitted within Right of Way limits.

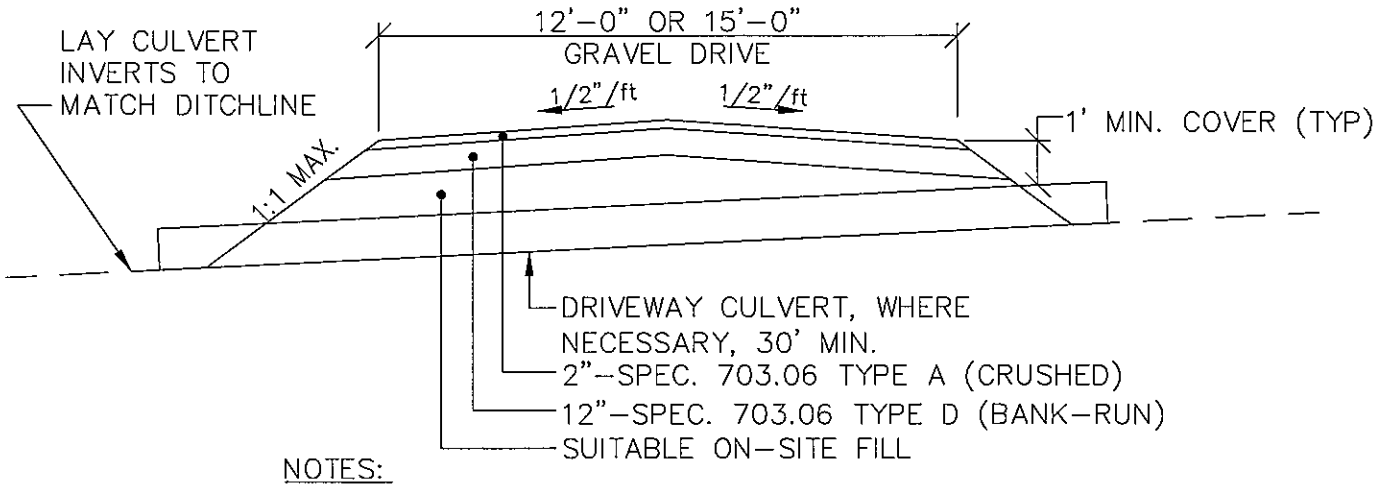

NOTES:

1. SINGLE-FAMILY DRIVEWAY TO BE 12' MIN. WIDTH.
2. COMMON / SHARED DRIVEWAY TO BE 15' MIN. WIDTH.

1 TYPICAL DRIVEWAY W/ CULVERT DETAIL

NOT TO SCALE

WALSH
ENGINEERING ASSOCIATES, INC.
One Karen Dr., Suite 2A | Westbrook, Maine 04092
ph: 207.553.9898 | www.walsh-eng.com

WATSON WOODS SUBDIVISION

NORTH ROAD & HUSSEY ROAD
PARSONSFIELD, MAINE

Sheet Title:	TYPICAL DRIVEWAY
Job No.:	16149
Date:	4/19/18
Scale:	AS SHOWN
Drawn:	JWG
Checked:	

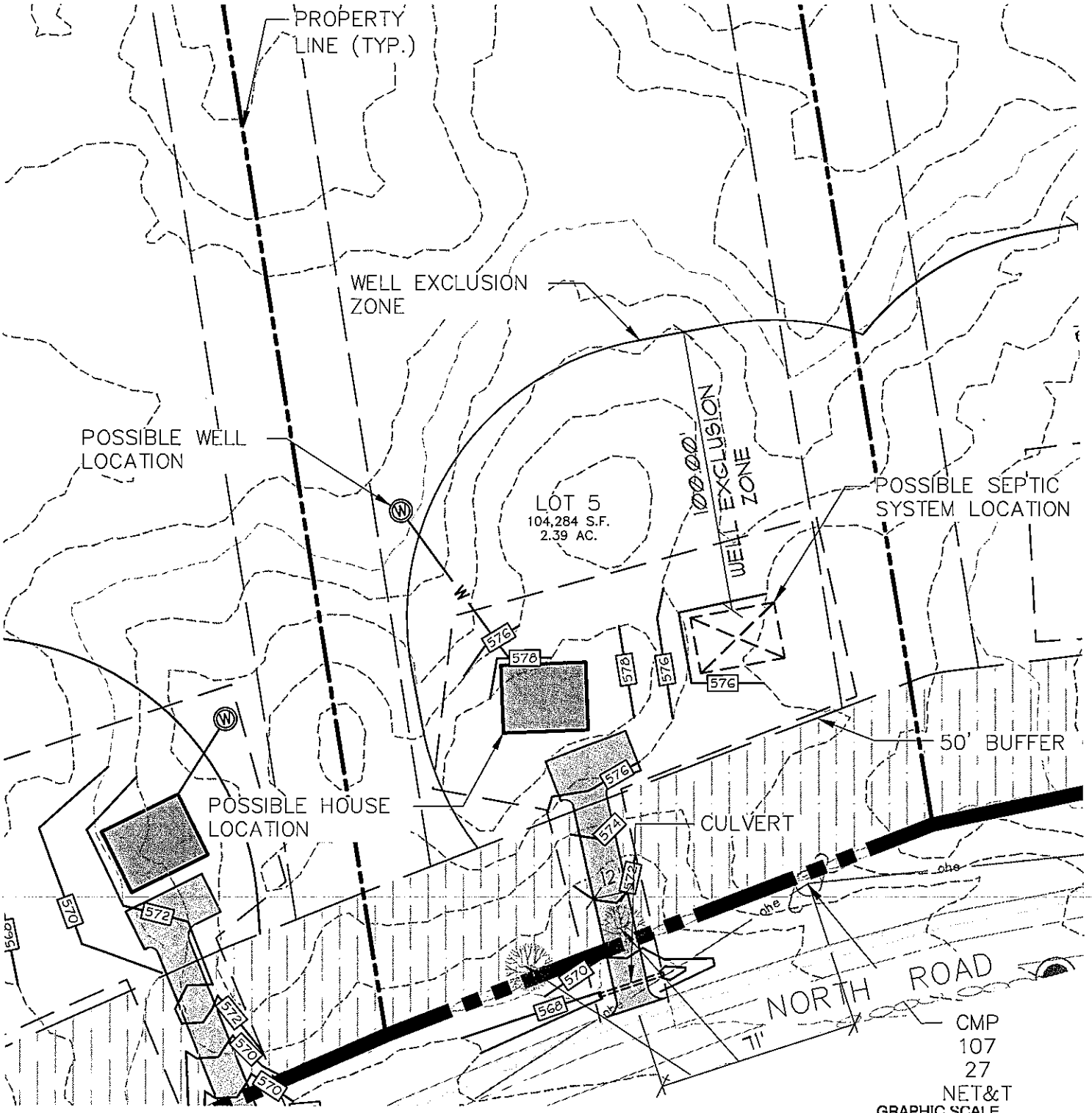

LOT GRADING AND HOUSE LOCATIONS ARE CONCEPTUAL ONLY.

WALSH
ENGINEERING ASSOCIATES, INC.
One Karen Dr., Suite 2A | Westbrook, Maine 04092
ph: 207.553.9898 | www.walsh-eng.com

WATSON WOODS SUBDIVISION

NORTH ROAD & HUSSEY ROAD
PARSONSFIELD, MAINE

Sheet Title:	LOT 5
Job No.:	16149
Date:	4/19/18
Scale:	AS SHOWN
Drawn:	JWG
Checked:	

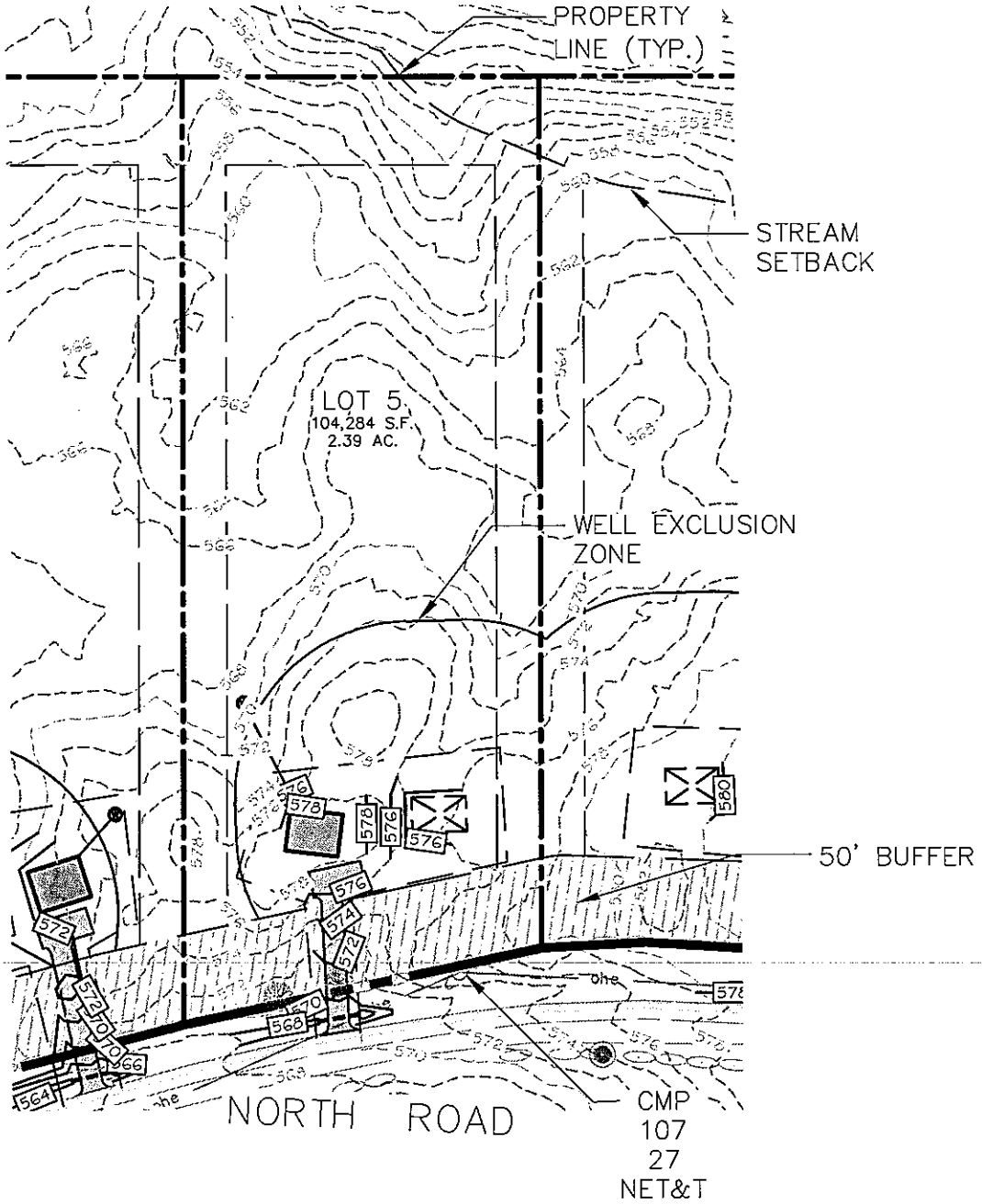

LOT GRADING AND HOUSE LOCATIONS ARE CONCEPTUAL ONLY.

GRAPHIC SCALE

50 0 25 50

1 inch = 50 ft.

WALSH
ENGINEERING ASSOCIATES, INC.

One Karen Dr., Suite 2A | Westbrook, Maine 04092
ph: 207.553.9898 | www.walsh-eng.com

WATSON WOODS SUBDIVISION

NORTH ROAD & HUSSEY ROAD
PARSONSFIELD, MAINE

Sheet Title:	LOT 5
Job No.:	16149
Date:	4/19/18
Scale:	AS SHOWN
Drawn:	JWG
Checked:	

Maine Department of Transportation

Paul R. LePage
Governor

Driveway/Entrance Permit

David Bernhardt, P.E,
Commissioner

Permit Number: 25795 - **Entrance ID:** 1

OWNER

Name: **NATESELLSREALESTATE, LLC**
Address: **P.O. Box 321**
Cornish, ME 04020
Telephone:

Date Printed: **May 09, 2018**

LOCATION

Route:	**0160X, North Road**
Municipality:	**Parsonsfield**
County:	**York**
Tax Map:	**R8** Lot Number: **37**
Culvert Size:	**15 inches**
Culvert Type:	**plastic**
Culvert Length:	**20 feet**
Date of Permit:	**May 09, 2018**
Approved Entrance Width:	**12 feet**

In accordance with rules promulgated under 23 M.R.S.A., Chapter 13, Subchapter I, Section 704, the Maine Department of Transportation (MaineDOT) approves a permit and grants permission to perform the necessary grading to construct, in accordance with sketch or attached plan, **a Driveway** to **Single Family Dwelling** at a point **542** feet **East** from **Hussey Road**, subject to the Chapter 299 Highway Driveway and Entrance Rules, standard conditions and special conditions (if any) listed below.

Conditions of Approval:

This Permittee acknowledges and agrees to comply with the Standard Conditions and Approval attached hereto and to any Specific Conditions of Approval shown here.

(G = GPS Location; W = Waiver; S = Special Condition)

G - THE ENTRANCE SHALL BE LOCATED AT GPS COORDINATES: 43.748230N, -70.906180W.

S - In the town of Parsonsfield on the northerly side of Route 160 / North Road, the centerline being approximately 542 feet easterly of the centerline of Hussey Road and approximately 120 feet westerly of utility pole 108.

S - The culvert shall be HDPE smoothbore plastic pipe. Ditching is required on both ends of the pipe of sufficient depth and length so as to provide smooth flow into the pipe, leave no standing water on the outlet end of the pipe, and provide adequate cover per the manufacturer's recommendation. The Property Owner must contact MaineDOT at (207) 324-5322 prior to driveway and culvert installation to arrange for an inspection.

Approved by: Anthony Fontaine Date: 5-9-2018

COPY

SCANNED
DATE 05/11/2018
DOCUMENT #: 1710264

STANDARD CONDITIONS AND APPROVAL

1. Provide, erect and maintain all necessary barricades, lights, warning signs and other devices as directed by MaineDOT to properly safeguard traffic while the construction is in progress.

2. At no time cause the highway to be closed to traffic

3. Where the driveway is located within a curb, curb and gutter, and/or sidewalk section, completely remove the existing curb, curb and gutter, and/or sidewalk as may be required to create the driveway and restore drainage. All driveways abutting sidewalk sections shall meet the requirements set forth in the Americans with Disabilities Act of 1990, 42 U.S.C. Sec. 12131 et seq.

4. Obtain, have delivered to the site, and install any culverts and/or drainage structures which may be necessary for drainage, the size, type and length as called for in the permit pursuant to 23 M.R.S.A. Sec. 705. All culverts and/or drainage structures shall be new.

5. Start construction of the proposed driveway within twenty-four (24) months of the date of permit issuance and substantially complete construction of the proposed driveway within twelve months of commencement of construction.

6. Comply with all applicable federal, state and municipal regulations and ordinances.

7. Do not alter, without the express written consent of the MaineDOT, any culverts or drainage swales within the MaineDOT right of way.

8. File a copy of the approved driveway permit with the affected municipality or LURC, as appropriate within 5 business days of receiving the MaineDOT approval.

9. Construct and maintain the driveway side slopes to be no steeper than the adjacent roadway side slopes, but in no case to be steeper than 3 horizontal to 1 vertical, unless the side slope is behind existing roadway guardrail, in which case it shall be no steeper than 2 horizontal to 1 vertical.

10. Notify the MaineDOT of a proposed change of use served by the driveway when increase in traffic flow is expected to occur. This does not exempt the need for obtaining a Traffic Movement Permit (TMP) if trip generation meets or exceeds 100 passenger car equivalents (PCE) during the peak hour of the day.

11. Construct or implement and maintain erosion and sedimentation measures sufficient to protect MaineDOT facilities.

12. Driveways shall be designed such that all maneuvering and parking of any vehicles will take place outside the highway right-of-way and where vehicles will exit the premises without backing onto the highway traveled way or shoulders. All driveways will have a turnaround area to accomodate vehicles using the premises.

FURTHER CONDITION OF THE PERMIT

The owner shall assume, the defense of, and pay all damages, fines, and penalties for which he/she shall become liable, and shall indemnify and safe harmless said Department, its representatives, agents and employees from liability, actions against all suits, claims, damages for wrongful death, personal injuries or property damage suffered by any person or association which results from the willful or negligent action or inaction of the owner/applicant (agent) and in proceedings of every kind arising out of the construction and maintenance of said entrance(s), including snow removal.

Nothing herein shall, nor is intended to, waive any defense, immunity or limitation of liability which may be available to the MaineDOT, their officers, agents or employees under the Maine Tort Claims Act or any other privileges and/or immunities provided by law. It is a further condition that the owner will agree to keep the right of way inviolate for public highway purposes and no signs (other than traffic signs and signals), posters, billboards, roadside stands, culvert end walls or private installations shall be permitted within Right of Way limits.

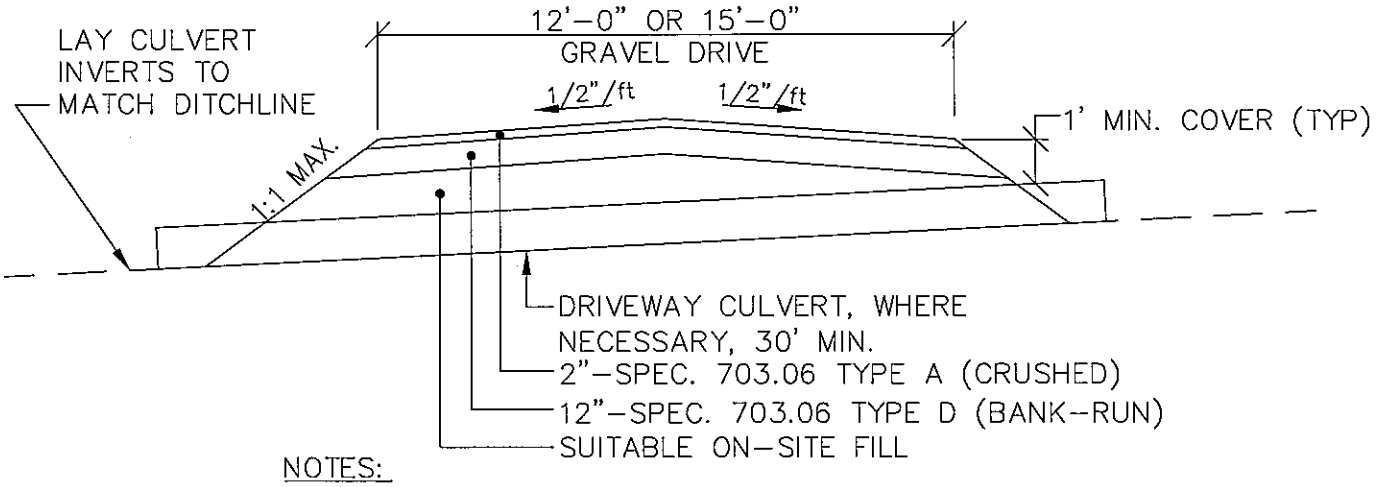

NOTES:

1. SINGLE-FAMILY DRIVEWAY TO BE 12' MIN. WIDTH.
2. COMMON / SHARED DRIVEWAY TO BE 15' MIN. WIDTH.

1 TYPICAL DRIVEWAY W/ CULVERT DETAIL

NOT TO SCALE

WALSH
ENGINEERING ASSOCIATES, INC.
One Karen Dr., Suite 2A | Westbrook, Maine 04092
ph: 207.553.9898 | www.walsh-eng.com

WATSON WOODS SUBDIVISION

NORTH ROAD & HUSSEY ROAD
PARSONSFIELD, MAINE

Sheet Title:	TYPICAL DRIVEWAY
Job No.:	16149
Date:	4/19/18
Scale:	AS SHOWN
Drawn:	JWG
Checked:	

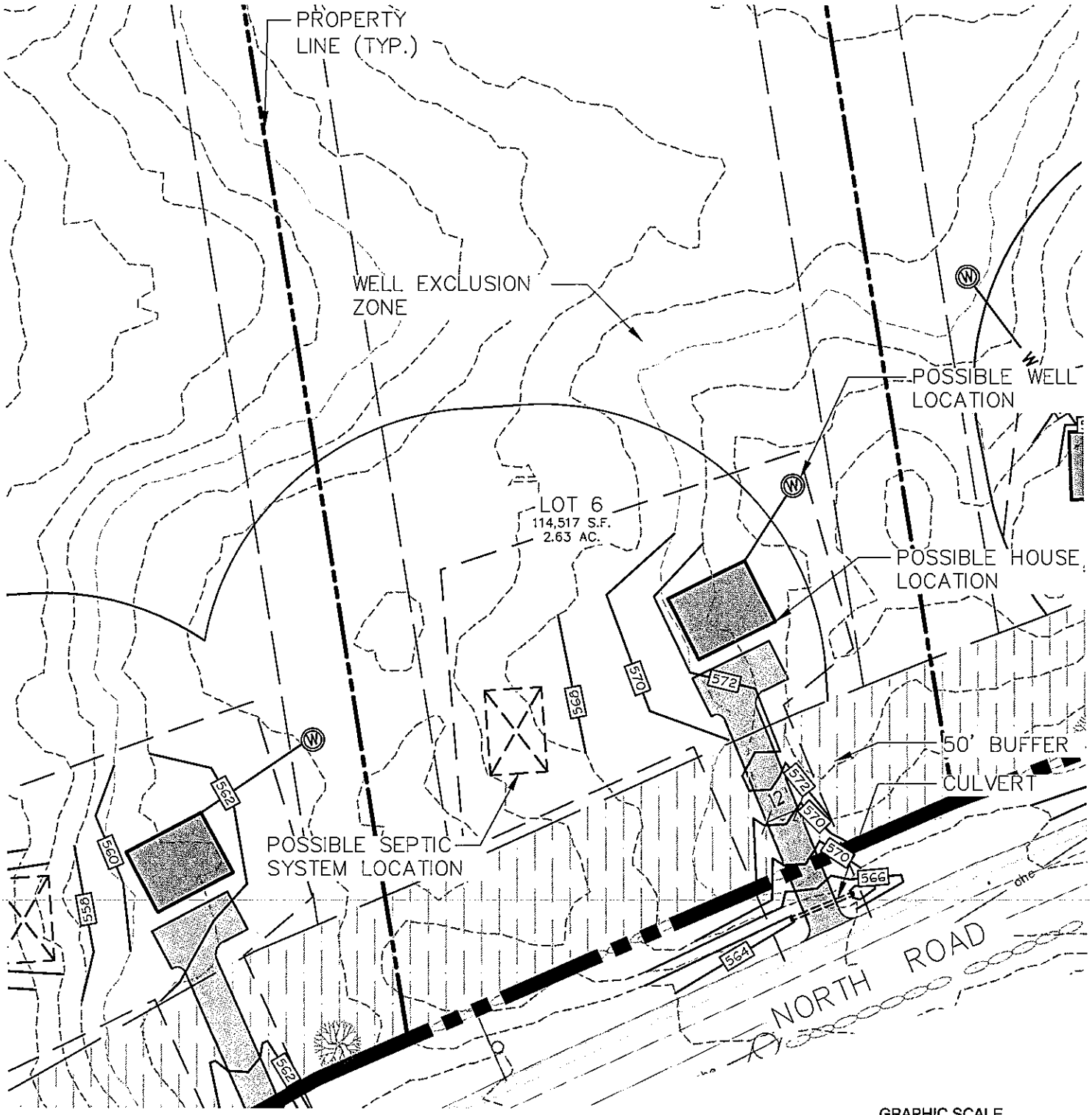

LOT GRADING AND HOUSE LOCATIONS ARE CONCEPTUAL ONLY.

WALSH
ENGINEERING ASSOCIATES, INC.
One Karen Dr., Suite 2A | Westbrook, Maine 04092
ph: 207.553.9898 | www.walsh-eng.com

WATSON WOODS SUBDIVISION

NORTH ROAD & HUSSEY ROAD
PARSONSFIELD, MAINE

Sheet Title:	LOT 6
Job No.:	16149
Date:	4/19/18
Scale:	AS SHOWN
Drawn:	JWG
Checked:	

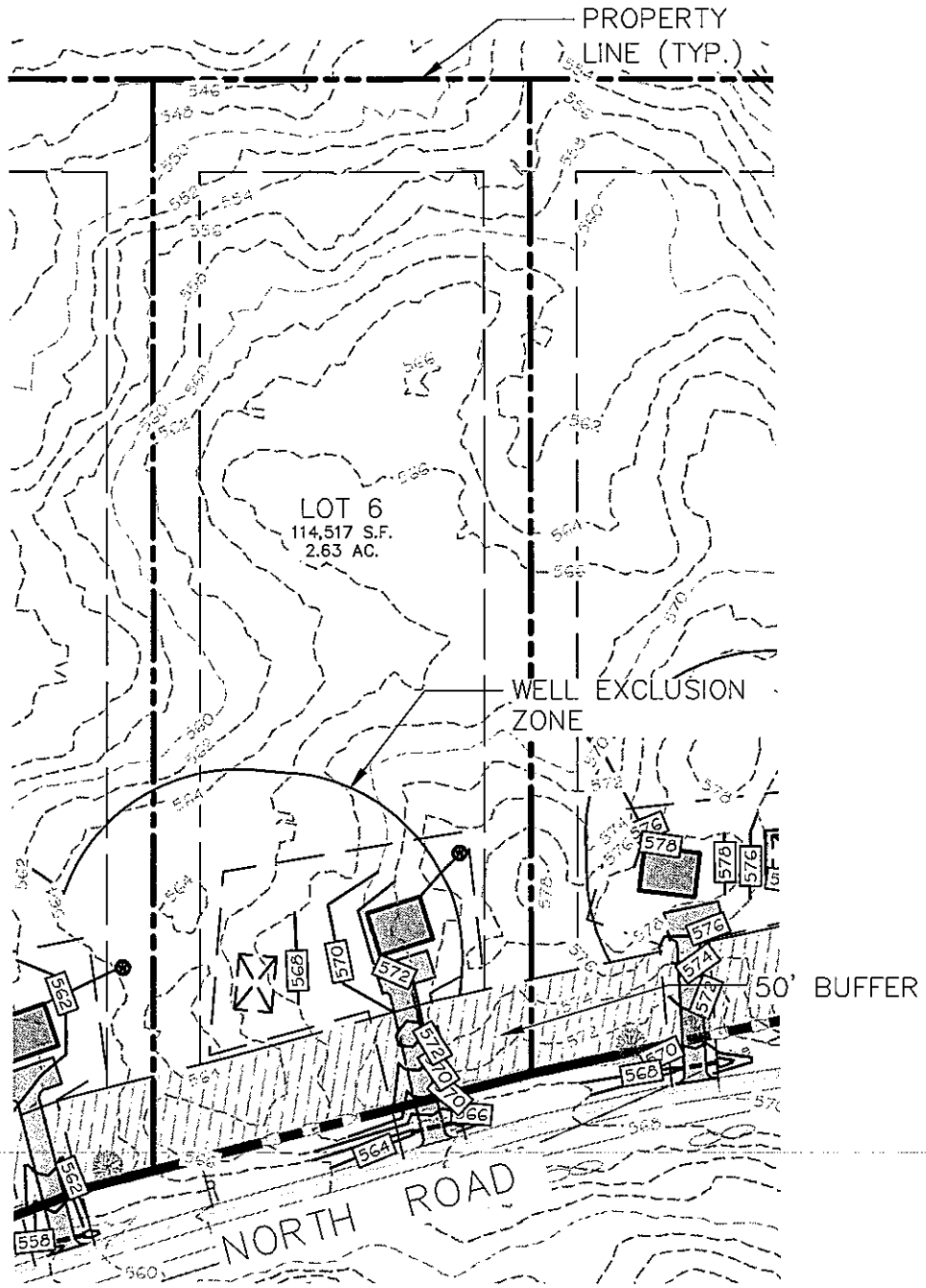

LOT GRADING AND HOUSE LOCATIONS ARE CONCEPTUAL ONLY.

GRAPHIC SCALE

50 0 25 50

1 inch = 50 ft.

WALSH
ENGINEERING ASSOCIATES, INC.

One Karen Dr., Suite 2A | Westbrook, Maine 04092
ph: 207.553.9898 | www.walsh-eng.com

WATSON WOODS SUBDIVISION

NORTH ROAD & HUSSEY ROAD
PARSONSFIELD, MAINE

Sheet Title:	LOT 6
Job No.:	16149
Date:	4/19/18
Scale:	AS SHOWN
Drawn:	JWG
Checked:	

Maine Department of Transportation

Paul R. LePage
Governor

Driveway/Entrance Permit

David Bernhardt, P.E,
Commissioner

Permit Number: 25796 - **Entrance ID:** 1

OWNER

Name: **NATESELLSREALESTATE, LLC**
Address: **P.O. Box 321**
Cornish, ME 04020
Telephone:

Date Printed: **May 09, 2018**

LOCATION

Route:	**0160X, North Road**
Municipality:	**Parsonsfield**
County:	**York**
Tax Map:	**R8** Lot Number: **37**
Culvert Size:	**15 inches**
Culvert Type:	**plastic**
Culvert Length:	**20 feet**
Date of Permit:	**May 09, 2018**
Approved Entrance Width:	**12 feet**

In accordance with rules promulgated under 23 M.R.S.A., Chapter 13, Subchapter I, Section 704, the Maine Department of Transportation (MaineDOT) approves a permit and grants permission to perform the necessary grading to construct, in accordance with sketch or attached plan, **a Driveway** to **Single Family Dwelling** at a point **490** feet **East** from **Hussey Road**, subject to the Chapter 299 Highway Driveway and Entrance Rules, standard conditions and special conditions (if any) listed below.

Conditions of Approval:

This Permittee acknowledges and agrees to comply with the Standard Conditions and Approval attached hereto and to any Specific Conditions of Approval shown here.

(G = GPS Location; W = Waiver; S = Special Condition)

G - THE ENTRANCE SHALL BE LOCATED AT GPS COORDINATES: 43.748230N, -70.906200W.

S - In the town of Parsonsfield on the northerly side of Route 160 / North Road, the centerline being approximately 490 feet easterly of the centerline of Hussey Road and approximately 164 feet easterly of utility pole 109.

S - The culvert shall be HDPE smoothbore plastic pipe. Ditching is required on both ends of the pipe of sufficient depth and length so as to provide smooth flow into the pipe, leave no standing water on the outlet end of the pipe, and provide adequate cover per the manufacturer's recommendation. The Property Owner must contact MaineDOT at (207) 324-5322 prior to driveway and culvert installation to arrange for an inspection.

Approved by: Anthony Fontaine Date: 5-9-2018

STANDARD CONDITIONS AND APPROVAL

1. Provide, erect and maintain all necessary barricades, lights, warning signs and other devices as directed by MaineDOT to properly safeguard traffic while the construction is in progress.

2. At no time cause the highway to be closed to traffic

3. Where the driveway is located within a curb, curb and gutter, and/or sidewalk section, completely remove the existing curb, curb and gutter, and/or sidewalk as may be required to create the driveway and restore drainage. All driveways abutting sidewalk sections shall meet the requirements set forth in the Americans with Disabilities Act of 1990, 42 U.S.C. Sec. 12131 et seq.

4. Obtain, have delivered to the site, and install any culverts and/or drainage structures which may be necessary for drainage, the size, type and length as called for in the permit pursuant to 23 M.R.S.A. Sec. 705. All culverts and/or drainage structures shall be new.

5. Start construction of the proposed driveway within twenty-four (24) months of the date of permit issuance and substantially complete construction of the proposed driveway within twelve months of commencement of construction.

6. Comply with all applicable federal, state and municipal regulations and ordinances.

7. Do not alter, without the express written consent of the MaineDOT, any culverts or drainage swales within the MaineDOT right of way.

8. File a copy of the approved driveway permit with the affected municipality or LURC, as appropriate within 5 business days of receiving the MaineDOT approval.

9. Construct and maintain the driveway side slopes to be no steeper than the adjacent roadway side slopes, but in no case to be steeper than 3 horizontal to 1 vertical, unless the side slope is behind existing roadway guardrail, in which case it shall be no steeper than 2 horizontal to 1 vertical.

10. Notify the MaineDOT of a proposed change of use served by the driveway when increase in traffic flow is expected to occur. This does not exempt the need for obtaining a Traffic Movement Permit (TMP) if trip generation meets or exceeds 100 passenger car equivalents (PCE) during the peak hour of the day.

11. Construct or implement and maintain erosion and sedimentation measures sufficient to protect MaineDOT facilities.

12. Driveways shall be designed such that all maneuvering and parking of any vehicles will take place outside the highway right-of-way and where vehicles will exit the premises without backing onto the highway traveled way or shoulders. All driveways will have a turnaround area to accomodate vehicles using the premises.

FURTHER CONDITION OF THE PERMIT

The owner shall assume, the defense of, and pay all damages, fines, and penalties for which he/she shall become liable, and shall indemnify and safe harmless said Department, its representatives, agents and employees from liability, actions against all suits, claims, damages for wrongful death, personal injuries or property damage suffered by any person or association which results from the willful or negligent action or inaction of the owner/applicant (agent) and in proceedings of every kind arising out of the construction and maintenance of said entrance(s), including snow removal.

Nothing herein shall, nor is intended to, waive any defense, immunity or limitation of liability which may be available to the MaineDOT, their officers, agents or employees under the Maine Tort Claims Act or any other privileges and/or immunities provided by law. It is a further condition that the owner will agree to keep the right of way inviolate for public highway purposes and no signs (other than traffic signs and signals), posters, billboards, roadside stands, culvert end walls or private installations shall be permitted within Right of Way limits.

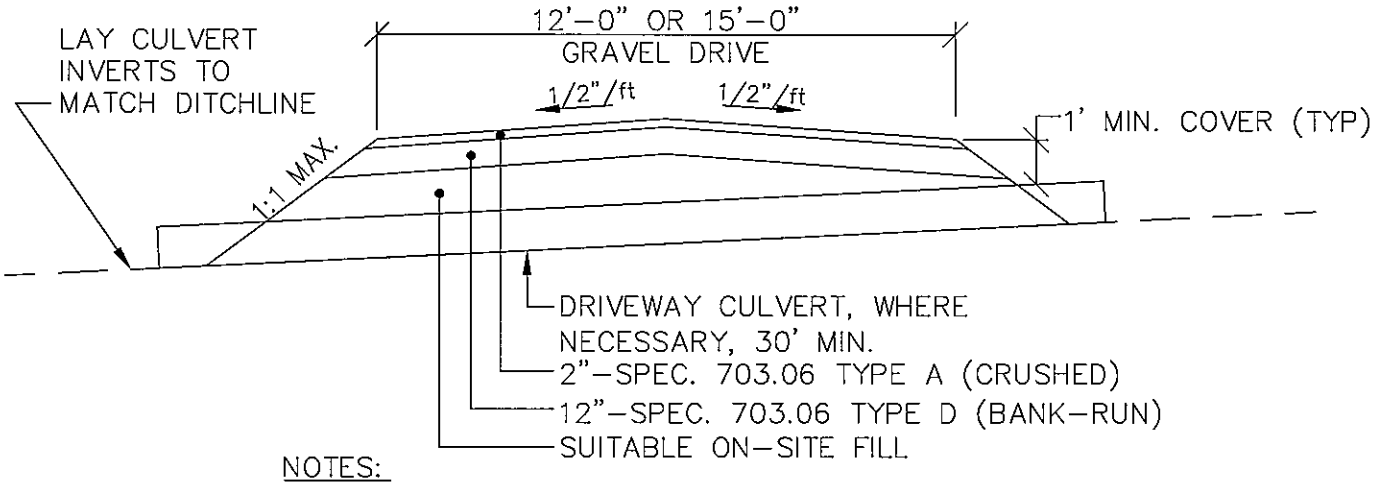

NOTES:

1. SINGLE-FAMILY DRIVEWAY TO BE 12' MIN. WIDTH.
2. COMMON / SHARED DRIVEWAY TO BE 15' MIN. WIDTH.

1 TYPICAL DRIVEWAY W/ CULVERT DETAIL

NOT TO SCALE

WALSH
ENGINEERING ASSOCIATES, INC.
One Karen Dr., Suite 2A | Westbrook, Maine 04092
ph: 207.553.9898 | www.walsh-eng.com

WATSON WOODS SUBDIVISION

NORTH ROAD & HUSSEY ROAD
PARSONSFIELD, MAINE

Sheet Title:	TYPICAL DRIVEWAY
Job No.:	16149
Date:	4/19/18
Scale:	AS SHOWN
Drawn:	JWG
Checked:	

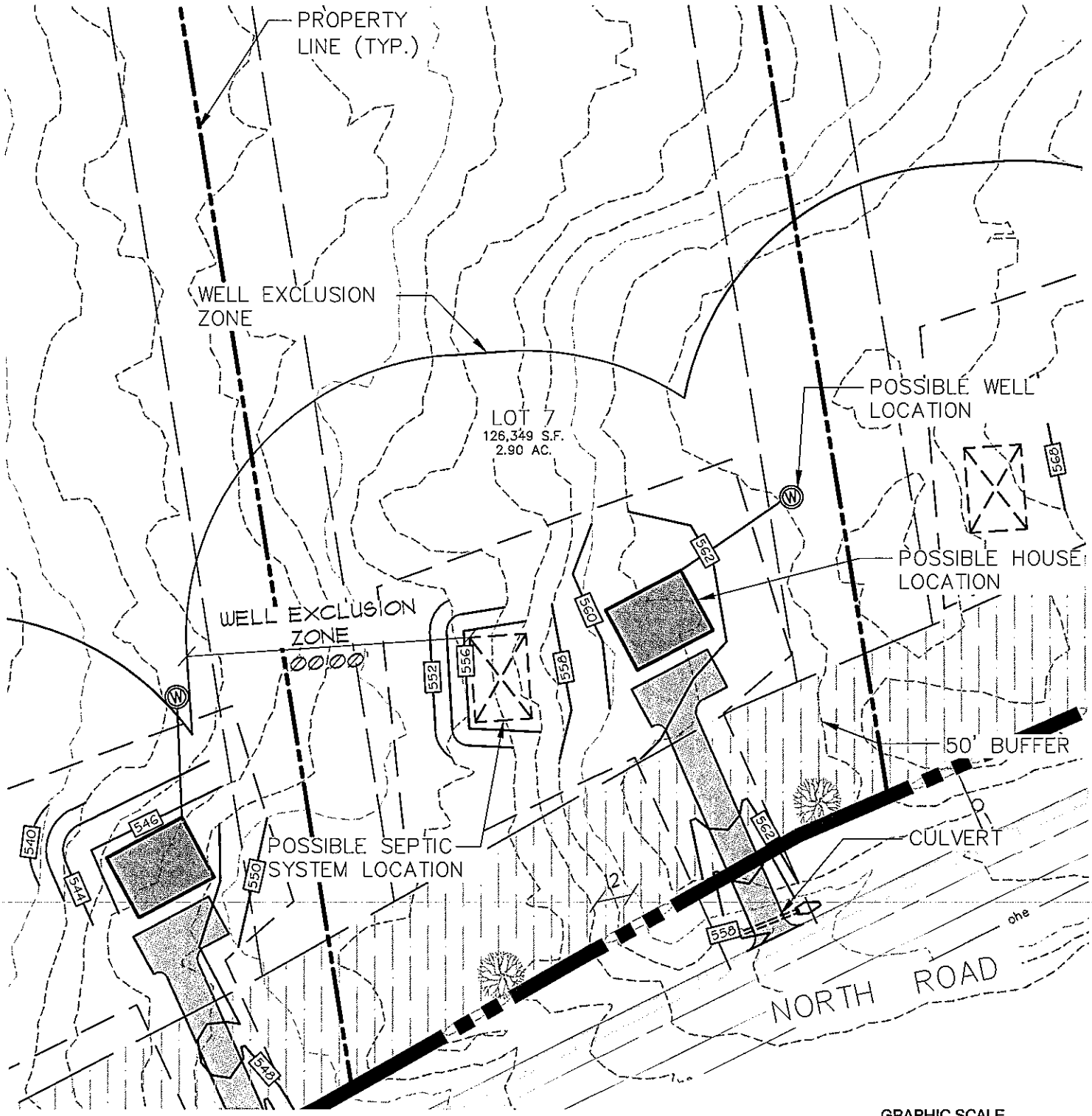

LOT GRADING AND HOUSE LOCATIONS ARE CONCEPTUAL ONLY.

GRAPHIC SCALE
50 0 25 50
1 inch = 50 ft.

WALSH
ENGINEERING ASSOCIATES, INC.
One Karen Dr., Suite 2A | Westbrook, Maine 04092
ph: 207.553.9898 | www.walsh-eng.com

WATSON WOODS SUBDIVISION

NORTH ROAD & HUSSEY ROAD
PARSONSFIELD, MAINE

Sheet Title: LOT 7

Job No.:	16149
Date:	4/19/18
Scale:	AS SHOWN
Drawn:	JWG
Checked:	

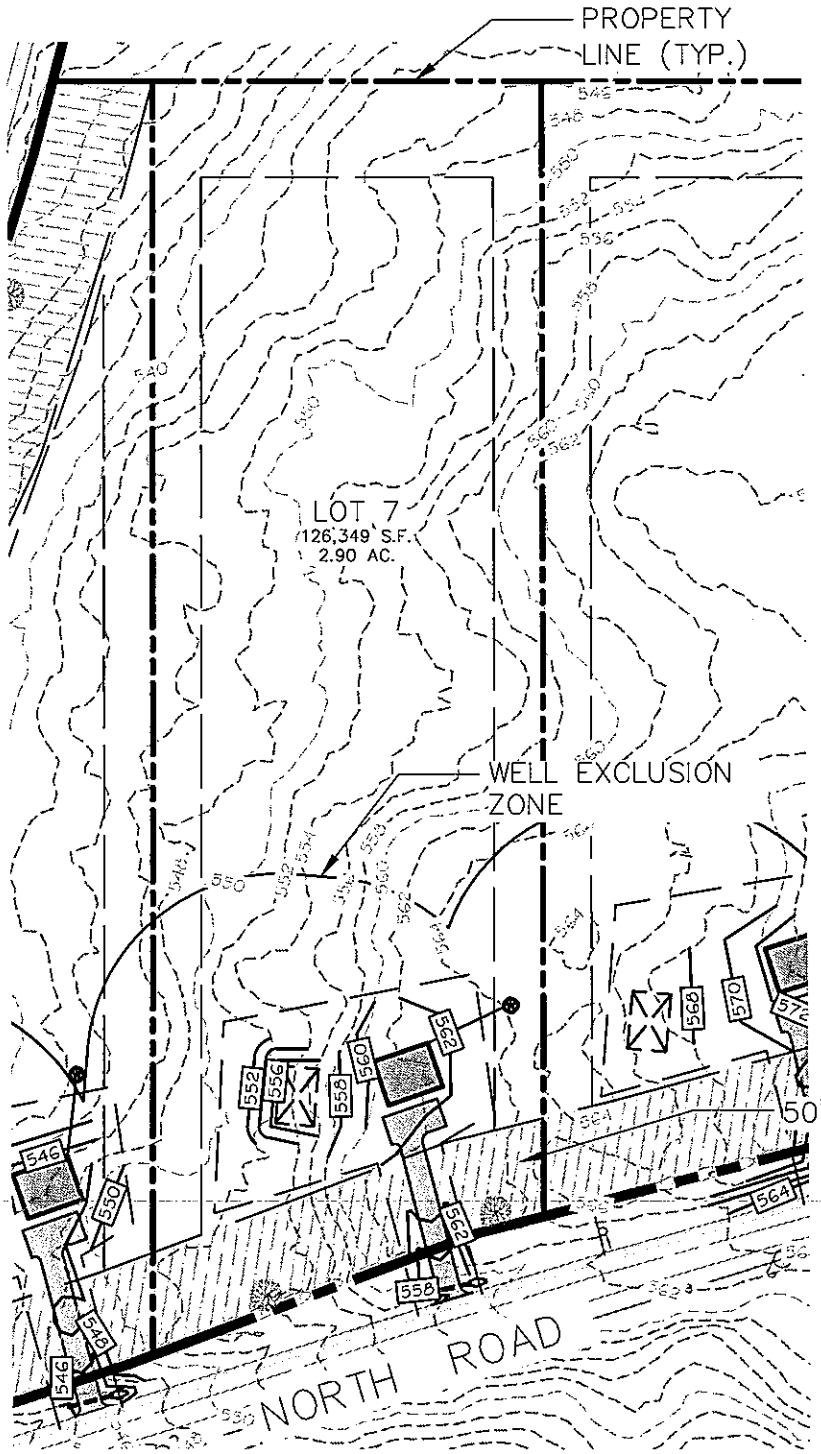

LOT GRADING AND HOUSE LOCATIONS ARE CONCEPTUAL ONLY.

N

GRAPHIC SCALE

50 0 25 50

1 inch = 50 ft.

WALSH
ENGINEERING ASSOCIATES, INC.

One Karen Dr., Suite 2A | Westbrook, Maine 04092
ph: 207.553.9898 | www.walsh-eng.com

WATSON WOODS SUBDIVISION

NORTH ROAD & HUSSEY ROAD
PARSONSFIELD, MAINE

Sheet Title:

LOT 7

Job No.:	16149
Date:	4/19/18
Scale:	AS SHOWN
Drawn:	JWG
Checked:	

Maine Department of Transportation

Paul R. LePage
Governor

Driveway/Entrance Permit

David Bernhardt, P.E,
Commissioner

Permit Number: 25797 - Entrance ID: 1

OWNER

Name: **NATESELLSREALESTATE, LLC**
Address: **P.O. Box 321**
Cornish, ME 04020
Telephone:

Date Printed: **May 09, 2018**

LOCATION

Route:	**0160X, North Road**
Municipality:	**Parsonsfield**
County:	**York**
Tax Map:	**R8** Lot Number: 37
Culvert Size:	**15 inches**
Culvert Type:	**plastic**
Culvert Length:	**20 feet**
Date of Permit:	**May 09, 2018**
Approved Entrance Width:	**12 feet**

In accordance with rules promulgated under 23 M.R.S.A., Chapter 13, Subchapter I, Section 704, the Maine Department of Transportation (MaineDOT) approves a permit and grants permission to perform the necessary grading to construct, in accordance with sketch or attached plan, **a Driveway** to **Single Family Dwelling** at a point **105** feet **East** from **Hussey Road**, subject to the Chapter 299 Highway Driveway and Entrance Rules, standard conditions and special conditions (if any) listed below.

Conditions of Approval:

This Permittee acknowledges and agrees to comply with the Standard Conditions and Approval attached hereto and to any Specific Conditions of Approval shown here.

(G = GPS Location; W = Waiver; S = Special Condition)

G - THE ENTRANCE SHALL BE LOCATED AT GPS COORDINATES: 43.748540N, -70.907440W.

S - In the town of Parsonsfield on the northerly side of Route 160 / North Road, the centerline being approximately 105 feet easterly of the centerline of Hussey Road and approximately 118 feet easterly of utility pole 110

S - The culvert shall be HDPE smoothbore plastic pipe Ditching is required on both ends of the pipe of sufficient depth and length so as to provide smooth flow into the pipe, leave no standing water on the outlet end of the pipe, and provide adequate cover per the manufacturer's recommendation The Property Owner must contact MaineDOT at (207) 324-5322 prior to driveway and culvert installation to arrange for an inspection.

Approved by: Anthony Fontaine Date: 5-9-2018

STANDARD CONDITIONS AND APPROVAL

1. Provide, erect and maintain all necessary barricades, lights, warning signs and other devices as directed by MaineDOT to properly safeguard traffic while the construction is in progress.

2. At no time cause the highway to be closed to traffic

3. Where the driveway is located within a curb, curb and gutter, and/or sidewalk section, completely remove the existing curb, curb and gutter, and/or sidewalk as may be required to create the driveway and restore drainage. All driveways abutting sidewalk sections shall meet the requirements set forth in the Americans with Disabilities Act of 1990, 42 U.S.C. Sec. 12131 et seq.

4. Obtain, have delivered to the site, and install any culverts and/or drainage structures which may be necessary for drainage, the size, type and length as called for in the permit pursuant to 23 M.R.S.A. Sec. 705. All culverts and/or drainage structures shall be new.

5. Start construction of the proposed driveway within twenty-four (24) months of the date of permit issuance and substantially complete construction of the proposed driveway within twelve months of commencement of construction.

6. Comply with all applicable federal, state and municipal regulations and ordinances.

7. Do not alter, without the express written consent of the MaineDOT, any culverts or drainage swales within the MaineDOT right of way.

8. File a copy of the approved driveway permit with the affected municipality or LURC, as appropriate within 5 business days of receiving the MaineDOT approval.

9. Construct and maintain the driveway side slopes to be no steeper than the adjacent roadway side slopes, but in no case to be steeper than 3 horizontal to 1 vertical, unless the side slope is behind existing roadway guardrail, in which case it shall be no steeper than 2 horizontal to 1 vertical.

10. Notify the MaineDOT of a proposed change of use served by the driveway when increase in traffic flow is expected to occur. This does not exempt the need for obtaining a Traffic Movement Permit (TMP) if trip generation meets or exceeds 100 passenger car equivalents (PCE) during the peak hour of the day.

11. Construct or implement and maintain erosion and sedimentation measures sufficient to protect MaineDOT facilities.

12. Driveways shall be designed such that all maneuvering and parking of any vehicles will take place outside the highway right-of-way and where vehicles will exit the premises without backing onto the highway traveled way or shoulders. All driveways will have a turnaround area to accomodate vehicles using the premises.

FURTHER CONDITION OF THE PERMIT

The owner shall assume, the defense of, and pay all damages, fines, and penalties for which he/she shall become liable, and shall indemnify and safe harmless said Department, its representatives, agents and employees from liability, actions against all suits, claims, damages for wrongful death, personal injuries or property damage suffered by any person or association which results from the willful or negligent action or inaction of the owner/applicant (agent) and in proceedings of every kind arising out of the construction and maintenance of said entrance(s), including snow removal.

Nothing herein shall, nor is intended to, waive any defense, immunity or limitation of liability which may be available to the MaineDOT, their officers, agents or employees under the Maine Tort Claims Act or any other privileges and/or immunities provided by law. It is a further condition that the owner will agree to keep the right of way inviolate for public highway purposes and no signs (other than traffic signs and signals), posters, billboards, roadside stands, culvert end walls or private installations shall be permitted within Right of Way limits.

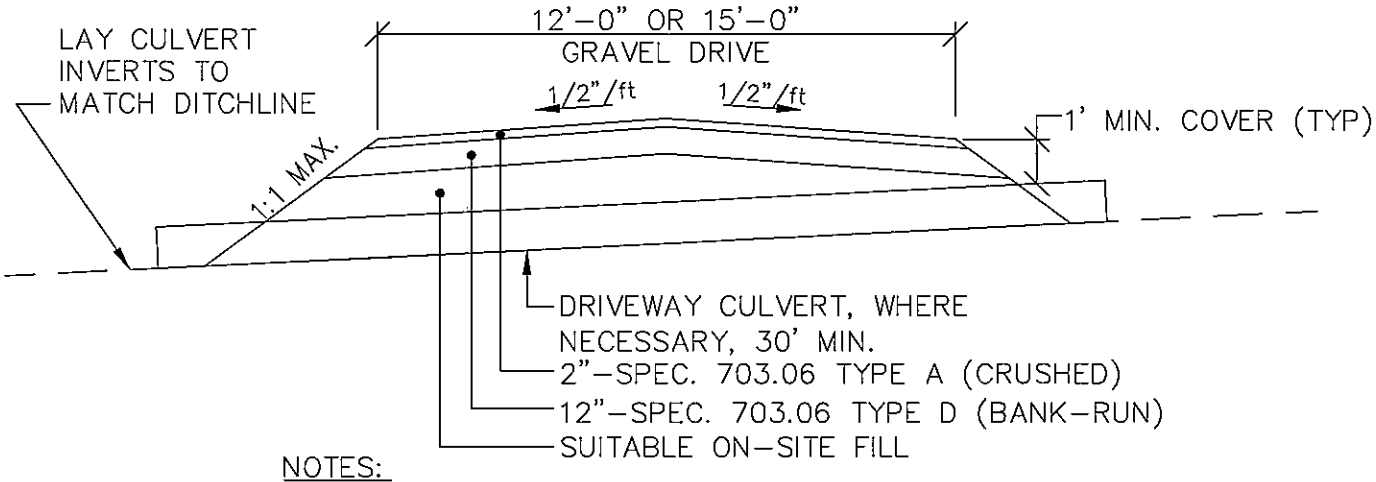

NOTES:

1. SINGLE-FAMILY DRIVEWAY TO BE 12' MIN. WIDTH.
2. COMMON / SHARED DRIVEWAY TO BE 15' MIN. WIDTH.

1 TYPICAL DRIVEWAY W/ CULVERT DETAIL

NOT TO SCALE

WALSH
ENGINEERING ASSOCIATES, INC.
One Karen Dr., Suite 2A | Westbrook, Maine 04092
ph: 207.553.9898 | www.walsh-eng.com

WATSON WOODS SUBDIVISION

NORTH ROAD & HUSSEY ROAD
PARSONSFIELD, MAINE

Sheet Title:	TYPICAL DRIVEWAY
Job No.:	16149
Date:	4/19/18
Scale:	AS SHOWN
Drawn:	JWG
Checked:	

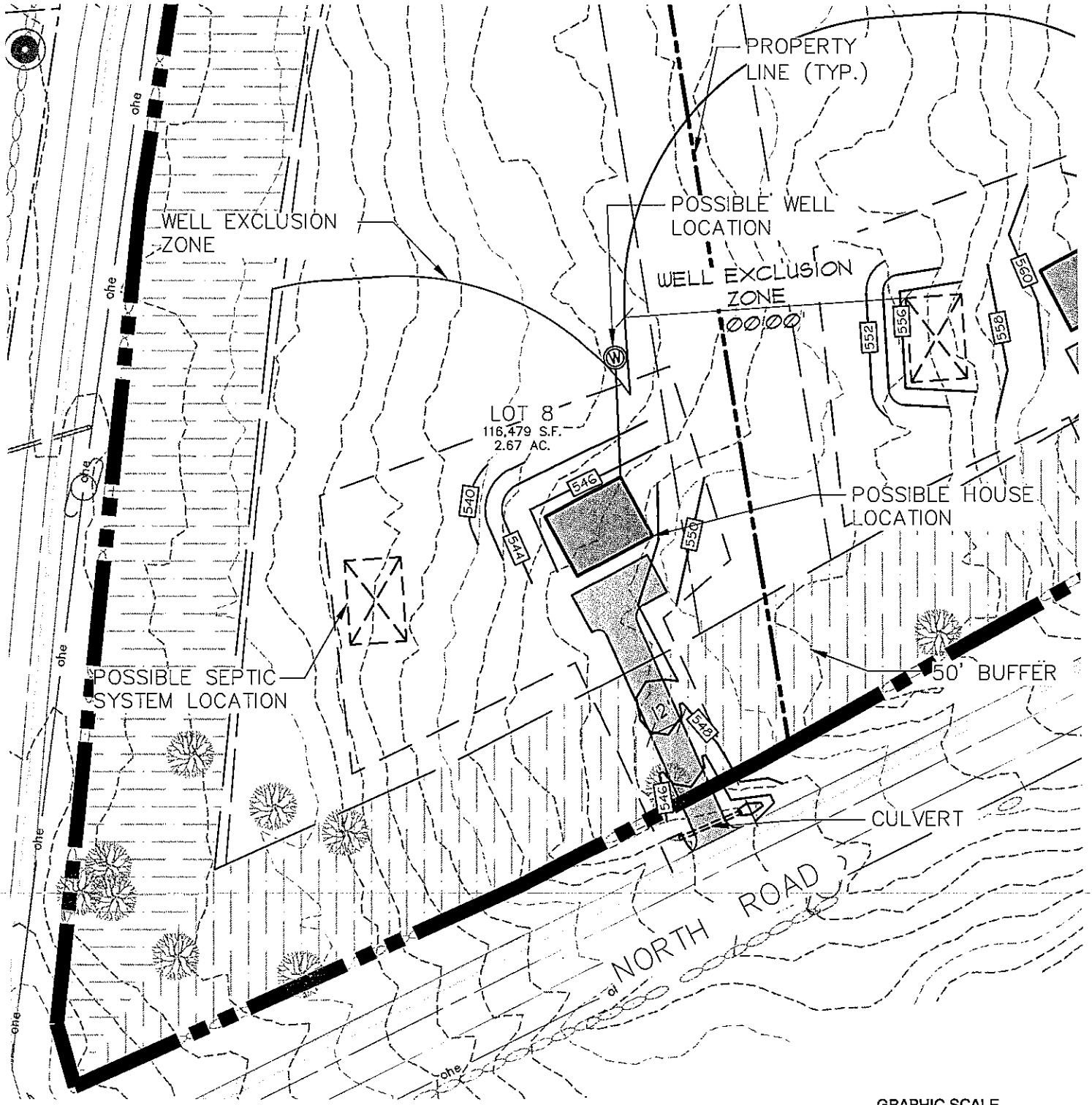

LOT GRADING AND HOUSE LOCATIONS ARE CONCEPTUAL ONLY.

GRAPHIC SCALE
50 0 25 50
1 inch = 50 ft.

WALSH
ENGINEERING ASSOCIATES, INC.
One Karen Dr., Suite 2A | Westbrook, Maine 04092
ph: 207.553.9898 | www.walsh-eng.com

WATSON WOODS SUBDIVISION

NORTH ROAD & HUSSEY ROAD
PARSONSFIELD, MAINE

Sheet Title: **LOT 8**

Job No.:	16149
Date:	4/19/18
Scale:	AS SHOWN
Drawn:	JWG
Checked:	

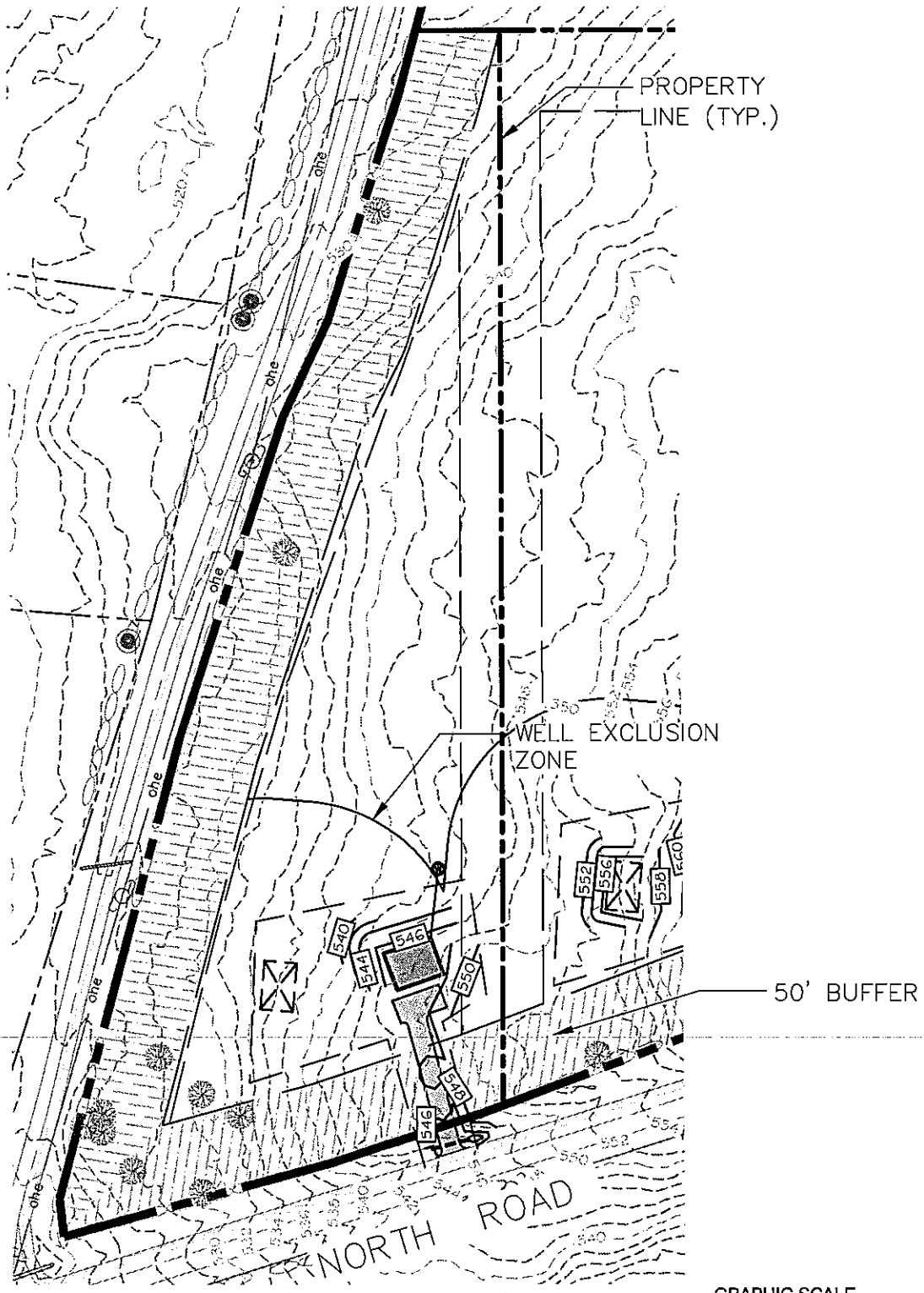

LOT GRADING AND HOUSE LOCATIONS
ARE CONCEPTUAL ONLY.

WALSH
ENGINEERING ASSOCIATES, INC.

One Karen Dr., Suite 2A | Westbrook, Maine 04092
ph: 207.553.9898 | www.walsh-eng.com

WATSON WOODS SUBDIVISION

NORTH ROAD & HUSSEY ROAD
PARSONSFIELD, MAINE

Sheet Title:
LOT 8

Job No.:	16149
Date:	4/19/18
Scale:	AS SHOWN
Drawn:	JWG
Checked:	