// Retail Price List & Product Info Guide

ALTA
WINDOW FASHIONS

# ROLLER
## SHADES

Effective April 1, 2019 (Revised 4/15/19)

*design simplified*™

# TABLE OF CONTENTS

**Product Overview**
• Features and Benefits . . . . . 2
• Collection Information (includes Opacity) . . . . . 3-4
• Color Chart . . . . . 5-8

**Pricing Information**
• Group 1 (Clutch Roller with Beaded Chain and Option Charges) . . . . . 9
• Group 2 (Clutch Roller with Beaded Chain and Option Charges) . . . . . 10
• Group 3 (Clutch Roller with Beaded Chain and Option Charges) . . . . . 11
• Group 4 (Clutch Roller with Beaded Chain and Option Charges) . . . . . 12
• Group 5 (Clutch Roller with Beaded Chain and Option Charges) . . . . . 13
• Group 6 (Clutch Roller with Beaded Chain and Option Charges) . . . . . 14
• Group 7 (Clutch Roller with Beaded Chain and Option Charges) . . . . . 15
• Group 8 (Clutch Roller with Beaded Chain and Option Charges) . . . . . 16
• Motorization Options: PowerWand™, Simplicity Rechargeable & Remolift™ Motorization Charges . . . . . 18
• Hardwired Motorization and Motor Ready Options. . . . . 19
• Deluxe Valance Pricing . . . . . 27
• Fabric Valance Pricing . . . . . 28
• Pocket Headrail, Side and Bottom Channel Pricing . . . . . 29
• Decorative Pull Tassels, Spring Assist Option, Railroading/Material Splicing/Seam Placement . . . . . 30
• Exterior Shades Surcharge Pricing . . . . . 32

**Product Specifications**
• Large Decorative Patterns & Tube Size Upgrade . . . . . 17
• Options & Features, including Beaded Loop Length Chart and TouchLift Cordless . . . . . 20
• PowerWand™, Simplicity Rechargeable and RemoteLift™ Motorization . . . . . 21-25
• Cassettes & Fascias. . . . . 26
• Deluxe, Fabric Valance, and Dual Mount Shade . . . . . 27-28
• Pocket Headrail, Side and Bottom Channels . . . . . 29
• Decorative Pull Tassels, Spring Assist Option, Railroading/Material Splicing/Seam Placement . . . . . 30
• Bottomrail Options. . . . . 31
• Exterior Shades . . . . . 32-33
• Ordering Notes, 2-On-1, Features and Options . . . . . 34
• Product Notes. . . . . 35
• Flame Retardant Fabrics . . . . . 35
• Product Size Specifications – Clutch Lift. . . . . 36-51
• Product Size Specifications – TouchLift Cordless. . . . . 52-53
• Product Size Specifications – PowerWand™ Rechargeable Motorization . . . . . 54-72
• Product Size Specifications – Simplicity Rechargeable Motorization . . . . . 73-87
• Product Size Specifications – RemoteLift™ Motorization . . . . . 88-119
• Product Size Specifications – Hardwired Motorization . . . . . 120-137
• Mounting Requirements, Clutch Systems . . . . . 138
• Finished Dimensions . . . . . 139-143
• Hardware Color Coordination Chart . . . . . 144-152
• Solar Optical Information . . . . . 153
• Solar Optical Chart . . . . . 154-162
• Product Components/Roller Shade Characteristics . . . . . 163-172
• Roller Shade Characteristics . . . . . 173

## FEATURES AND BENEFITS

- Over 520 stunning materials, with robust menu of decorative, blackout fabrics, vinyl, plus over 250 screen styles.
- Featuring various screen styles ranging from simple contemporary screens to decorative screens. Including popular Mermet and Phifer fabrics, with wide array of colors, weaves and openness factors ranging from 1% to 10%. Many are flame retardant, bacteria and fungal resistant materials. Outdoor grade selections are also available.
- Elegant selection of textures, patterns, color combinations, and grass-like styles provide valued privacy, and gently filter incoming light.
- Many of our decorative patterns are now available in both light filtering and blackout materials. This is a great way to coordinate light filtering and room darkening shades throughout a home while meeting specific light control needs by room.
- Control options include beaded chain clutch control, TouchLift cordless and motorized control for complete hands-free operating ease and convenience.
- Three cassette valance options with fabric insert, neatly hide the shade when raised, providing a more finished, decorative appearance.
- Two fascia options in multiple painted colors, add a sleek and flat decorative appearance, while neatly hiding raised shades.
- Optional deluxe valance designed with clear edge groove holding matching fabric insert, and fabric valance mounted on a wood dust cover can both serve as stylish alternatives to cassette headrails and fascia.
- Bottomrail options include the standard fabric-wrapped rail, optional painted deluxe rail, flat deco rail, and a heat-sealed aluminum bar (fabric pocket style).
- Exterior shades feature corrosion-resistant components and exterior grade fabrics that can stand up to the outdoor elements.
- Panel Track and Roman Shades are available. See separate guide for information and pricing.
- Limited Lifetime Warranty ensures your customers' satisfaction.

# COLLECTION INFORMATION

| Material Name | Color Family | Price Group | Material Width | Fabric Content | Opacity | Flame Retardant | Greenguard Certified | Bacterial & Fungal Resistant | Railroad Option | Splice/ Seam | Deluxe Valance | Fabric Valance | Bottom Rail Styles Fabric Wrapped/Deluxe/ Heat Sealed/Flat Deco** | Panel Track | Roller Roman Shades | Exterior Shade |
|---|---|---|---|---|---|---|---|---|---|---|---|---|---|---|---|---|
| 1% E Screen | R80 | 4 | 122" | 36% Fiberglass, 64% Vinyl | D | YES | YES | YES | YES | YES | YES | YES | All | YES | YES | YES |
| 1% Sheerweave 2500 | R01 | 6 | 126" | 37% Fiberglass, 63% Vinyl on Fiberglass | D | YES | YES | YES | YES | YES | YES | YES | All | YES | YES | YES |
| 1% Sheerweave 2701 | RS21 | 5 | 126" | 36% Fiberglass, 64% Vinyl on Fiberglass | D | YES | YES | YES | YES | YES | YES | YES | All | YES | YES | YES |
| 1% Sheerweave 4901 | P4901 | 5 | 98" | 17% Polyester, 83% Vinyl on Polyester | D | YES | YES | YES | NO | NO | YES | YES | All | YES | NO | YES |
| 1% Sheerweave 5000 | P5001 | 4 | 98" | 49% Polyester, 51% Vinyl on Polyester | D | YES | YES | YES | NO | NO | YES | YES | All except flat deco | YES | Varies | YES |
| 1% Toka | RS11 | 3 | 118" | 30% Polyester, 70% PVC | D | YES | YES | YES | YES | YES | YES | YES | All | YES | YES | NO |
| 3% E Screen | R81 | 3 | 122" | 36% Fiberglass, 64% Vinyl | C | YES | YES | YES | YES | YES | YES | YES | All | YES | YES | YES |
| 3% M Screen | R58 | 4 | 122" | 36% Fiberglass, 64% Vinyl | C | YES | YES | YES | YES | YES | YES | YES | All | YES | YES | YES |
| 3% Sheerweave 2410 | R06 | 4 | 126" | 36% Fiberglass, 64% Vinyl on Fiberglass | C | YES | YES | YES | YES | YES | YES | YES | All | YES | YES | YES |
| 3% Sheerweave 2703 | P2703 | 4 | 126" | 36% Fiberglass, 64% Vinyl on Fiberglass | C | YES | YES | YES | YES | YES | YES | YES | All | YES | NO | YES |
| 3% Sheerweave 4400 | RS2 | 4 | 126" | 25% Polyester, 75% Vinyl on Polyester | C | YES | YES | YES | YES | YES | YES | YES | All except flat deco | YES | YES | YES |
| 3% Sheerweave 4600 | P4600 | 5 | 126" | 17% Polyester, 83% Vinyl on Polyester | C | YES | YES | YES | YES | YES | YES | YES | Heat sealed only | YES | NO | YES |
| 3% Sheerweave 4903 | P4903 | 4 | 98" | 17% Polyester, 83% Vinyl on Polyester | C | YES | YES | YES | NO | NO | YES | YES | All | YES | NO | YES |
| 3% Sheerweave 5000 | R07 | 4 | 98" | Varies | C | YES | YES | YES | NO | NO | YES | YES | All except flat deco | YES | NO | YES |
| 3% T Screen | RS16 | 4 | 98" | 36% Fiberglass, 64% Vinyl | C | YES | YES | YES | YES | NO | YES | YES | All | YES | YES | YES |
| 4% S Screen | RS15 | 5 | 122" | 33.6% Fiberglass, 59.6% Vinyl, 6.8% Polyester | B | YES | YES | YES | NO | NO | YES | YES | All | YES | NO | YES |
| 4% Silver Screen | RS6 | 8 | 94" | 64% PVC, 36% Fiberglass | C | YES | YES | YES | YES | YES | YES | YES | All except flat deco | YES | YES | NO |
| 5% E Screen | R51 | 3 | 122" | 36% Fiberglass, 64% Vinyl | B | YES | YES | YES | YES | YES | YES | YES | All | YES | YES | YES |
| 5% M Screen Deco | R61 | 4 | 98" | 36% Fiberglass, 64% Vinyl | B | YES | YES | YES | YES | YES | YES | YES | All | YES | YES | YES |
| 5% Sheerweave 2000 | P2000 | 4 | 126" | 37% Fiberglass, 63% Vinyl on Fiberglass | B | YES | YES | YES | YES | YES | YES | YES | All | YES | NO | YES |
| 5% Sheerweave 2390 | RS1 | 3 | 126" | 35% Fiberglass, 65% Vinyl on Fiberglass | B | YES | YES | YES | YES | YES | YES | YES | All | YES | YES | YES |
| 5% Sheerweave 2705 | P2705 | 4 | 126" | 36% Fiberglass, 64% Vinyl on Fiberglass | B | YES | YES | YES | NO | NO | YES | NO | Heat sealed only | YES | NO | YES |
| 5% Sheerweave 4000 | R09 | 3 | 126" | 25% Polyester, 75% Vinyl on Polyester | B | YES | YES | YES | YES | YES | YES | YES | All except flat deco | YES | YES | YES |
| 5% Sheerweave 4500 | P4500 | 4 | 126" | 17% Polyester, 83% Vinyl on Polyester | B | YES | YES | YES | YES | YES | YES | YES | All | YES | NO | YES |
| 5% Sheerweave 5000 | R10 | 4 | 98" | Varies | B | YES | YES | YES | NO | NO | YES | YES | All* except flat deco | YES | NO | YES |
| 7% Global Screen | RS14 | 2 | 118" | 30% Polyester, 70%PVC | B | YES | YES | YES | YES | YES | YES | YES | All | YES | YES | NO |
| 7% Sheerweave 5000 | R34 | 4 | 98" | Varies | B | YES | YES | YES | NO | NO | YES | YES | All except flat deco | YES | NO | YES |
| 10% E Screen | R19 | 3 | 122" | 36% Fiberglass, 64% Vinyl | A | YES | YES | YES | YES | YES | YES | YES | All | YES | YES | YES |
| 10% Sheerweave 2360 | P2360 | 3 | 126" | 35% Fiberglass, 65% Vinyl on Fiberglass | A | YES | YES | YES | NO | NO | YES | YES | All | YES | NO | YES |
| 10% Sheerweave 4100 | P4100 | 3 | 98" | 25% Polyester, 75% Vinyl on Polyester | A | YES | YES | YES | YES | YES | YES | YES | All except flat deco | YES | NO | YES |
| 10% Sheerweave 5000 | R26 | 4 | 98" | 28% Polyester, 72% Vinyl on Polyester | A | YES | YES | YES | NO | NO | YES | YES | All except flat deco | YES | NO | YES |

* Heat sealed hem bar strongly recommended for R1015, R1019 & R1020
**Flat deco bottom rail (effective 5/20/2019)
Note: heat sealed hem bar is highly recommended with large shades for best shade appearance.

**A. Glare Reducing**
Softly filters light and reduces glare. Images, shapes and people can be seen clearly. Provides the least amount of light and shape screening.

**B. Filtering**
Filters strong light. Images, shapes and people can be seen with some clarity. Provides a modest degree of light and shape screening.

**C. Shading**
Significantly reduces light. Images, shapes and people cannot be seen clearly. Provides a moderate to strong degree of light and shape screening.

**D. Blocking**
Dramatically reduces light. Images, shapes and people are not distinguishable. Provides privacy against most all direct light and shape screening (except minimal light that may seep through closed or overlapping opaque/blackout vanes).

**E. Blackout**
Blocks out virtually all light (except light that may enter on the sides of the shade) for maximum privacy and darkness.

**Openess cross over reference:** *(Most colors cross over)*
- E Screen (1%, 3%, 5%, 7% & 10%), all colors cross over.
- Sheerweave (SW) - 1% SW2500, 3% SW2410, 5% SW2390 & 10% SW2360
  - 3% SW4400, 5% SW4000 & 10% SW4100
  - 1% SW2701, 3% SW2703 & 5% SW2705
  - 3% SW4600 & 5% SW4500
  - 1% SW4901 & 3% SW4903

# COLLECTION INFORMATION

| Material Name | Color Family | Price Group | Material Width | Fabric Content | Opacity | Flame Retardant | Greenguard Certified | Bacterial & Fungal Resistant | Railroad Option | Splice/ Seam | Deluxe Valance | Fabric Valance | Bottom Rail Styles Fabric Wrapped/Deluxe/ Heat Sealed/Flat Deco** | Panel Track | Roller Roman Shades | Exterior Shade |
|---|---|---|---|---|---|---|---|---|---|---|---|---|---|---|---|---|
| Alexandria | RD4 | 7 | 78" | 100% Polyester | B | NO | NO | N/A | NO | NO | YES | YES | All | YES | YES | NO |
| Astaire | RF42 | 5 | 94" | 100% Polyester | B | NO | NO | NO | NO | NO | NO | NO | All except flat deco | NO | NO | NO |
| Avila R Blackout | RB7 | 4 | 118" | 37.5% Polyester, 62.5% Acrylic | E | YES | YES | YES | YES | YES | YES | YES | Heat sealed only | YES | NO | NO |
| Baroque | RD5 | 6 | 78" | 65% Cotton, 35% Polyester | C | NO | NO | NO | NO | NO | YES | YES | All | YES | YES | NO |
| Blackout - Solid | R40 | 1 | 72" | 100% PVC Coated Fiberglass | E | YES | YES | YES | YES | YES | YES | NO | All | YES | NO | NO |
| Brilliance | RD8 | 5 | 118" | 100% Polyester | B | NO | NO | Yes | NO | NO | YES | YES | All | YES | YES | NO |
| Brilliance Blackout | RB6 | 6 | 118" | 100% Polyester | E | NO | NO | YES | NO | NO | YES | YES | All | YES | NO | NO |
| Cararra | RD6 | 2 | 110" | 100% Polyester with Acrylic Coating | C | NO | NO | N/A | NO | NO | YES | YES | All | YES | YES | NO |
| Cararra Blackout | RB4 | 2 | 110" | 100% Polyester with Acrylic Coating | E | NO | NO | N/A | NO | NO | YES | YES | All | NO | NO | NO |
| Claudio | RD7 | 5 | 110" | 90% Polyester, 10% Cationic Polyester | C | NO | NO | NO | NO | NO | YES | YES | All | YES | YES | NO |
| Claudio Blackout | RB5 | 5 | 110" | 90% Polyester, 10% Cationic Polyester | E | NO | NO | NO | NO | NO | YES | YES | All | YES | NO | NO |
| Cusco | RF6 | 7 | 110" | 100% Polyester | E | NO | NO | N/A | YES | YES | YES | YES | All | YES | YES | NO |
| Darien | RD1 | 5 | 90" | 100% Polyester | B | NO | NO | N/A | NO | NO | YES | YES | All | YES | YES | NO |
| Drizzle | RD2 | 5 | 94" | 89% Polyester, 11% Linen | B | NO | NO | N/A | YES | YES | YES | YES | All | YES | YES | NO |
| Fiona | RD3 | 6 | 78" | 100% Polyester | C | NO | NO | YES | NO | NO | YES | YES | All | YES | YES | NO |
| Flocke Blackout | R92 | 8 | 94" | 42% Fiberglass, 51% Acrylic, 7% Cotton Flocked Backing | E | YES | NO | NO | YES | YES | YES | YES | All | YES | NO | NO |
| Hayworth | RF32 | 2 | 98" | 100% Polyester | B | NO | NO | NO | YES | YES | YES | YES | All | YES | YES | NO |
| Illusion | RF34 | 4 | 72" | 100%Polyester | B | NO | NO | YES | YES | NO | YES | YES | All | YES | YES | NO |
| Jasper | RF5 | 8 | 110" | 100% Polyester | C | NO | NO | N/A | YES | YES | YES | YES | All | YES | YES | NO |
| Linview | R56 | 3 | 122" | 100% Polyester | B | NO | NO | N/A | YES | YES | YES | YES | All | YES | YES | NO |
| Linview Blackout | RB3 | 4 | 94" | 100% Polyester | E | NO | NO | N/A | NO | NO | YES | YES | Heat sealed only | YES | NO | NO |
| Montero | RF4 | 3 | 94" | 100% Polyester with Acrylic Coating | D | NO | NO | N/A | NO | NO | YES | YES | All | YES | YES | NO |
| Moravia | RF8 | 7 | 96" | 100% Polyester | B | NO | NO | N/A | NO | NO | YES | YES | All | YES | YES | NO |
| Santa Cruz | RF3 | 3 | 94" | 100% Polyester | D | NO | NO | N/A | NO | NO | YES | YES | All | YES | YES | NO |
| Santa Cruz Blackout | RB1 | 3 | 94" | 100% Polyester | E | NO | NO | N/A | NO | NO | YES | YES | All | YES | NO | NO |
| Scala Blackout | R100 | 2 | 110" | 100% Polyester | E | NO | NO | N/A | YES | YES | YES | NO | Heat sealed only | YES | NO | NO |
| Sheerweave 7200R *(Blackout)* | P7200R | 4 | 118" | 100% Polyester with Acrylic Foamed Backing | E | NO | YES | NO | NO | NO | YES | YES | Heat sealed only | YES | NO | NO |
| Sheerweave 7250R *(Light Filtering)* | P7250R | 3 | 118" | 100% Polyester with Acrylic Coating | C | NO | YES | NO | NO | NO | YES | YES | Heat sealed only | YES | NO | NO |
| Sheerweave 7400 *(Blackout)* | P7400 | 6 | 118" | 100% Polyester with Acrylic Foamed Backing | E | YES | YES | NO | NO | NO | YES | YES | All | YES | NO | NO |
| Sheerweave 7450 *(Light Filtering)* | P7450 | 5 | 118" | 100% Polyester with Acylic Coating | B | NO | YES | NO | NO | NO | YES | YES | All | YES | NO | NO |
| Sheerweave 7500R *(Blackout)* | P7500R | 2 | 118" | 100% Polyester with Acylic Coating | E | NO | YES | NO | NO | NO | YES | NO | Heat sealed only | YES | NO | NO |
| Sheerweave 7500 *(Blackout)* | P7500 | 3 | 118" | 100% Polyester with Acylic Coating | E | YES | YES | NO | NO | NO | YES | NO | Heat sealed only | YES | NO | NO |
| Sheerweave 7600 *(Blackout)* | P7600 | 6 | 118" | 45% Polyester/55% Acrylic Foamed Backing | E | YES | YES | NO | NO | NO | YES | YES | All | YES | NO | NO |
| Sheerweave 7650 *(Light Filtering)* | P7650 | 5 | 118" | 100% Polyester | B | YES | YES | NO | NO | NO | YES | YES | All | YES | NO | NO |
| Sheerweave 7700R *(Blackout)* | P7700R | 3 | 118" | 100% Polyester with Acyrylic Foamed Backing | E | NO | YES | NO | NO | NO | YES | YES | All | YES | NO | NO |
| Sheerweave 7750R *(Light Filtering)* | P7750R | 3 | 118" | 100% Polyester with Acrylic Coating | C | NO | YES | NO | YES | YES | YES | YES | Heat sealed only | YES | NO | NO |
| Sorrento | RF35 | 2 | 108" | 85.9% Polyester, 8.3% Cotton, 5.8% Flax | B | NO | NO | YES | NO | NO | YES | YES | All | YES | YES | NO |
| Sunscreen (SW) 7000 | R11 | 7 | 118" | 100% Polyester with Acrylic Foamed Backing | E | YES | YES | YES | YES | YES | YES | YES | All | YES | NO | NO |
| Tundra | RD9 | 2 | 94" | 100% Polyester | B | NO | NO | NO | YES | YES | YES | YES | Heat sealed only | YES | NO | NO |
| Tundra Blackout | RB8 | 2 | 94" | 100% Polyester | E | NO | NO | NO | YES | YES | YES | YES | Heat sealed only | YES | NO | NO |
| Uptown | R79 | 8 | 78" | 66% Cotton, 34% Polyester | C | NO | NO | NO | YES | NO | YES | YES | All except heat sealed | YES | YES | NO |
| Uptown Room Darkening | R79 | 8 | 78" | 66% Cotton, 34% Polyester | E | NO | NO | NO | YES | NO | YES | YES | All except heat sealed | YES | NO | NO |
| World Textures 1 | R48 | 5 | 78" | 80% Cotton, 20% Flax | C | NO | NO | NO | YES | YES | YES | YES | All | YES | NO | NO |
| World Textures 1 Blackout | R50 | 6 | 78" | 100% Cotton | E | NO | NO | NO | YES | YES | YES | YES | All | YES | NO | NO |
| World Textures 2 | R49 | 7 | 80" | 40% Viscose, 23% PES, 20% Cotton, 17% Flax | C | NO | NO | NO | YES | YES | YES | YES | All except flat deco | YES | NO | NO |
| World Textures 2 Blackout | R50 | 7 | 80" | 40% Viscose, 23% PES, 20% Cotton, 17% Flax | E | NO | NO | NO | YES | YES | YES | YES | All | YES | NO | NO |

**Flat deco bottom rail (effective 5/20/2019)
Note: heat sealed hem bar is highly recommended with large shades for best shade appearance.

**A. Glare Reducing**
Softly filters light and reduces glare. Images, shapes and people can be seen clearly. Provides the least amount of light and shape screening.

**B. Filtering**
Filters strong light. Images, shapes and people can be seen with some clarity. Provides a modest degree of light and shape screening.

**C. Shading**
Significantly reduces light. Images, shapes and people cannot be seen clearly. Provides a moderate to strong degree of light and shape screening.

**D. Blocking**
Dramatically reduces light. Images, shapes and people are not distinguishable. Provides privacy against most all direct light and shape screening (except minimal light that may seep through closed or overlapping opaque/blackout vanes).

**E. Blackout**
Blocks out virtually all light (except light that may enter on the sides of the shade) for maximum privacy and darkness.

**Complementary Collections:** *(Most colors cross over)*

- Brilliance & Brilliance Blackout
- Cararra & Cararra Blackout
- Claudio & Claudio Blackout
- Linview & Linview Blackout
- Santa Cruz & Santa Cruz Blackout
- Sheerweave 72050R (LF) & 7200R (BO)
- Sheerweave 7450 (LF) & 7400 (BO)
- Sheerweave 7500R (BO) & 7500 (BO)
- Sheerweave 7650 (LF) & 7600 (BO)
- Sheerweave 7750R (LF) & 7700R (BO)
- Uptown & Uptown Blackout
- World Texture 2 & World Texture 2 Blackout

# COLOR CHART

*(Standard lead-time)*

| Material Name | Color Name | Color # |
|---|---|---|
| 1% E Screen | Charcoal/Charcoal | R8009 |
| 1% E Screen | Charcoal/Cocoa | R8007 |
| 1% E Screen | Charcoal/Grey | R8008 |
| 1% E Screen | White | R8004 |
| 1% E Screen | White/Linen | R8005 |
| 1% E Screen | White/Pearl | R8003 |
| | | |
| 1% Sheerweave 2500 | Charcoal | R0103 |
| 1% Sheerweave 2500 | Charcoal/Alpaca | R0109 |
| 1% Sheerweave 2500 | Charcoal/Chestnut | R0104 |
| 1% Sheerweave 2500 | Oyster | R0105 |
| 1% Sheerweave 2500 | Oyster/Beige | R0106 |
| 1% Sheerweave 2500 | Oyster/Pearl Gray | R0107 |
| | | |
| 1% Sheerweave 2701 | Oyster | RS2101 |
| 1% Sheerweave 2701 | Oyster/Beige | RS2102 |
| 1% Sheerweave 2701 | Oyster/Charcoal | RS2106 |
| 1% Sheerweave 2701 | Oyster/Chestnut | RS2105 |
| 1% Sheerweave 2701 | Oyster/Pearl Gray | RS2103 |
| 1% Sheerweave 2701 | Oyster/Pewter | RS2104 |
| | | |
| 1% Sheerweave 5000 | Jute/Coffee | P5001 R88 |
| 1% Sheerweave 5000 | Jute/Flax | P5001 R86 |
| | | |
| 1% Toka | Bone | RS11002 |
| 1% Toka | Platinum | RS11003 |
| 1% Toka | White | RS11001 |
| | | |
| 3% E Screen | Charcoal/Charcoal | R8102 |
| 3% E Screen | Charcoal/Cocoa | R8107 |
| 3% E Screen | Charcoal/Grey | R8108 |
| 3% E Screen | White/Linen | R8104 |
| 3% E Screen | White/Pearl | R8105 |
| 3% E Screen | White/White | R8106 |
| | | |
| 3% M Screen | Charcoal/Apricot | R5803 |
| 3% M Screen | Charcoal/Charcoal | R5805 |
| 3% M Screen | Charcoal/Sable | R5808 |
| 3% M Screen | White Linen | R5807 |
| 3% M Screen | White/White | R5801 |
| | | |
| 3% Sheerweave 2410 | Charcoal | R0603 |
| 3% Sheerweave 2410 | Charcoal/Alpaca | R0609 |
| 3% Sheerweave 2410 | Charcoal/Chestnut | R0604 |
| 3% Sheerweave 2410 | Oyster | R0605 |
| 3% Sheerweave 2410 | Oyster/Beige | R0606 |
| 3% Sheerweave 2410 | Oyster/Pearl Gray | R0607 |
| | | |
| 3% Sheerweave 2703 | Oyster | P2703 P12 |
| 3% Sheerweave 2703 | Oyster/Beige | P2703 P13 |
| 3% Sheerweave 2703 | Oyster/Charcoal | P2703 P28 |
| 3% Sheerweave 2703 | Oyster/Chestnut | P2703 P92 |
| 3% Sheerweave 2703 | Oyster/Pearl Gray | P2703 P14 |
| 3% Sheerweave 2703 | Oyster/Pewter | P2703 P91 |

| Material Name | Color Name | Color # |
|---|---|---|
| 3% Sheerweave 4400 | Alabaster | RS2200 |
| 3% Sheerweave 4400 | Chalk | RS2202 |
| 3% Sheerweave 4400 | Greystone | RS2201 |
| 3% Sheerweave 4400 | Pewter | RS2203 |
| | | |
| 3% Sheerweave 5000 | Bark/Sienna | R0710 |
| 3% Sheerweave 5000 | Chenille/Honey | R0707 |
| 3% Sheerweave 5000 | Linen/Cinnamon | R0702 |
| 3% Sheerweave 5000 | Linen/Cream | R0704 |
| 3% Sheerweave 5000 | Linen/Fig | R0705 |
| | | |
| 3% T Screen | Charcoal/Charcoal | RS16005 |
| 3% T Screen | Charcoal/Grey | RS16006 |
| 3% T Screen | Sable/Charcoal | RS16003 |
| 3% T Screen | White/Pearl | RS16004 |
| 3% T Screen | White/Sable-Straw | RS16002 |
| 3% T Screen | White/White | RS16001 |
| | | |
| 4% S Screen | Ginger | RS15006 |
| 4% S Screen | Granite | RS15004 |
| 4% S Screen | Papyrus | RS15003 |
| 4% S Screen | Porcelain | RS15001 |
| 4% S Screen | Sesame | RS15007 |
| | | |
| 4% Silver Screen | Beige | RS6501 |
| 4% Silver Screen | Black | RS6504 |
| 4% Silver Screen | Bronze | RS6503 |
| 4% Silver Screen | Light Grey | RS6500 |
| 4% Silver Screen | White | RS6502 |
| | | |
| 5% E Screen | Charcoal/Charcoal | R5105 |
| 5% E Screen | Charcoal/Cocoa | R5104 |
| 5% E Screen | Charcoal/Grey | R5110 |
| 5% E Screen | Pure White | R5101 |
| 5% E Screen | White/Linen | R5108 |
| 5% E Screen | White/Pearl | R5109 |
| | | |
| 5% M Screen Deco | Flagstone | R6107 |
| 5% M Screen Deco | Harvest Wheat | R6104 |
| 5% M Screen Deco | Hazelnut | R6105 |
| 5% M Screen Deco | Parchment | R6106 |
| 5% M Screen Deco | River Rock | R6102 |
| 5% M Screen Deco | Tumbleweed | R6103 |

| Material Name | Color Name | Color # |
|---|---|---|
| 5% Sheerweave 2390 | Charcoal | RS1105 |
| 5% Sheerweave 2390 | Charcoal/Alpaca | RS1106 |
| 5% Sheerweave 2390 | Charcoal/Chestnut | RS1104 |
| 5% Sheerweave 2390 | Charcoal/Gray | RS1102 |
| 5% Sheerweave 2390 | Oyster | RS1100 |
| 5% Sheerweave 2390 | Oyster/Beige | RS1101 |
| 5% Sheerweave 2390 | Oyster/Pearl Gray | RS1103 |
| | | |
| 5% Sheerweave 4000 | Alabaster | R0901 |
| 5% Sheerweave 4000 | Chalk | R0902 |
| 5% Sheerweave 4000 | Granite | R0906 |
| 5% Sheerweave 4000 | Greystone | R0904 |
| | | |
| 5% Sheerweave 5000 | Aura Sable | R1021 |
| 5% Sheerweave 5000 | Bark/Ash | R1009 |
| 5% Sheerweave 5000 | Bark/Pewter | R1010 |
| 5% Sheerweave 5000 | Bark/Tiger Oak | R1001 |
| 5% Sheerweave 5000 | Chenille/Driftwood | R1007 |
| 5% Sheerweave 5000 | Contour Essence | R1017 |
| 5% Sheerweave 5000 | Contour Natural | R1016 |
| 5% Sheerweave 5000 | Contour Smoke | R1018 |
| 5% Sheerweave 5000 | Linen/Pearl | R1014 |
| 5% Sheerweave 5000 | Linen/Taupe | R1015 |
| 5% Sheerweave 5000 | Metro /Platinum | R1019 |
| 5% Sheerweave 5000 | Pavestone | R1020 |
| 5% Sheerweave 5000 | Tweed/Buckeye | R1003 |
| 5% Sheerweave 5000 | Tweed/Oatmeal | R1006 |
| 5% Sheerweave 5000 | Twine/Flagstone | R1012 |
| 5% Sheerweave 5000 | Twine/Metal | R1013 |
| 5% Sheerweave 5000 | Twine/Oatmeal | R1011 |
| | | |
| 7% Global Screen | Barley | RS14002 |
| 7% Global Screen | Canvas | RS14001 |
| 7% Global Screen | Platinum | RS14003 |
| | | |
| 7% Sheerweave 5000 | Bamboo/Wheat | R34 Q46 |
| 7% Sheerweave 5000 | Bamboo White/Wheat | R3409 |
| 7% Sheerweave 5000 | Linen/Clay | R3408 |
| | | |
| 10% E Screen | Charcoal/Charcoal | R1902 |
| 10% E Screen | Charcoal/Cocoa | R1907 |
| 10% E Screen | White Pearl | R1908 |
| 10% E Screen | White/Linen | R1905 |
| 10% E Screen | White/White | R1906 |
| | | |
| 10% Sheerweave 5000 | Bamboo/Birch | R2603 |

# COLOR CHART

*(Standard lead-time)*

| Material Name | Color Name | Color # |
|---|---|---|
| Alexandria | Charcoal | RD403 |
| Alexandria | Duck Egg | RD402 |
| Alexandria | Oatmeal | RD401 |
| | | |
| Astaire | Grey | RF42004 |
| Astaire | Ivory | RF42002 |
| Astaire | White | RF42001 |
| | | |
| Avila R Blackout | Canvas | RB703 |
| Avila R Blackout | Chalk | RB702 |
| Avila R Blackout | Charcoal | RB708 |
| Avila R Blackout | Khaki | RB705 |
| Avila R Blackout | Linen | RB704 |
| Avila R Blackout | Marine | RB706 |
| Avila R Blackout | Onyx | RB709 |
| Avila R Blackout | Pewter | RB707 |
| Avila R Blackout | White | RB701 |
| | | |
| Baroque | Champagne | RD501 |
| Baroque | Cyan | RD502 |
| Baroque | Ebony | RD504 |
| Baroque | Ruby | RD503 |
| | | |
| Blackout - Solid | Alabaster | R4011 |
| Blackout - Solid | Bone | R4005 |
| Blackout - Solid | Buff | R4008 |
| Blackout - Solid | Oyster | R4006 |
| Blackout - Solid | White | R4001 |
| | | |
| Brilliance | Birch | RD802 |
| Brilliance | Dove Gray | RD804 |
| Brilliance | Pearl | RD801 |
| Brilliance | Putty | RD803 |
| Brilliance | Pyrite | RD805 |
| Brilliance | Steel | RD806 |
| | | |
| Brilliance Blackout | Birch | RB602 |
| Brilliance Blackout | Dove Gray | RB604 |
| Brilliance Blackout | Pearl | RB601 |
| Brilliance Blackout | Putty | RB603 |
| Brilliance Blackout | Pyrite | RB605 |
| Brilliance Blackout | Steel | RB606 |
| | | |
| Carrara | Coal | RD606 |
| Carrara | Saddle | RD604 |
| Carrara | Silver | RD603 |
| Carrara | Storm | RD605 |
| Carrara | Tusk | RD602 |
| Carrara | White | RD601 |
| | | |
| Carrara Blackout | Coal | RB406 |
| Carrara Blackout | Storm | RB405 |
| Carrara Blackout | Saddle | RB404 |
| Carrara Blackout | Silver | RB403 |
| Carrara Blackout | Tusk | RB402 |
| Carrara Blackout | White | RB401 |
| | | |
| Claudio | Ash | RD706 |
| Claudio | Cloud | RD701 |
| Claudio | Cream | RD702 |
| Claudio | Gray Matters | RD708 |
| Claudio | Mink | RD704 |
| Claudio | Mist | RD703 |
| Claudio | Reef | RD705 |
| Claudio | Sailcloth | RD707 |

| Material Name | Color Name | Color # |
|---|---|---|
| Claudio Blackout | Ash | RB506 |
| Claudio Blackout | Cloud | RB501 |
| Claudio Blackout | Cream | RB502 |
| Claudio Blackout | Mink | RB504 |
| Claudio Blackout | Mist | RB503 |
| Claudio Blackout | Reef | RB505 |
| | | |
| Cusco | Chateau | RF6400 |
| Cusco | Coconut Husk | RF6401 |
| Cusco | Shadow Ridge | RF6402 |
| | | |
| Darien | Bark | RD106 |
| Darien | Beige | RD101 |
| Darien | Charcoal | RD107 |
| Darien | Driftwood | RD103 |
| Darien | Mocha | RD104 |
| Darien | Sand | RD102 |
| Darien | Sea Mist | RD105 |
| | | |
| Drizzle | Flax | RD201 |
| Drizzle | Graphite | RD205 |
| Drizzle | Hessian | RD202 |
| Drizzle | Iron | RD204 |
| Drizzle | Tweed | RD203 |
| | | |
| Fiona | Grey | RD303 |
| Fiona | Sand | RD301 |
| Fiona | Smokey Blue | RD302 |
| | | |
| Flocke Blackout | Chartreux | R9205 |
| Flocke Blackout | Crystal | R9204 |
| Flocke Blackout | Sea Cliff | R9202 |
| Flocke Blackout | Spun Silk | R9203 |
| | | |
| Hayworth | Linen | RF32001 |
| Hayworth | White | RF32000 |
| | | |
| Illusion | Dove | RF34003 |
| Illusion | Flannel | RF34004 |
| Illusion | Ivory | RF34002 |
| Illusion | Snow | RF34001 |
| | | |
| Jasper | Country Linen | RF5303 |
| Jasper | Heather | RF5302 |
| Jasper | Storm Cloud | RF5300 |
| Jasper | Tweed | RF5301 |
| | | |
| Linview | Ash | R5613 |
| Linview | Cabana Wood | R5603 |
| Linview | Fog | R5611 |
| Linview | Macadamia | R5606 |
| Linview | Midnight Black | R5615 |
| Linview | Morning Light | R5602 |
| Linview | Navy | R5610 |
| Linview | New York Grey | R5614 |
| Linview | Pale Lapis | R5609 |
| Linview | Pale Oak | R5617 |
| Linview | Porpoise | R5612 |
| Linview | Rural Green | R5607 |
| Linview | Sea Smoke | R5616 |
| Linview | Skyward | R5608 |
| Linview | Slate | R5605 |
| Linview | Soft Linen | R5618 |
| Linview | Summer White | R5601 |
| Linview | Weathered Walnut | R5604 |

| Material Name | Color Name | Color # |
|---|---|---|
| Linview Blackout | Alabaster | RB302 |
| Linview Blackout | Café Crème | RB303 |
| Linview Blackout | Collonade Gray | RB306 |
| Linview Blackout | Gauntlet Gray | RB309 |
| Linview Blackout | Pale Gray | RB307 |
| Linview Blackout | Pale Oak | RB311 |
| Linview Blackout | Pure White | RB301 |
| Linview Blackout | Sea Smoke | RB310 |
| Linview Blackout | Soft Linen | RB312 |
| Linview Blackout | Stone | RB304 |
| Linview Blackout | Tranquility | RB305 |
| Linview Blackout | Whale | RB308 |
| | | |
| Montero | Dark Walnut | RF4200 |
| Montero | Java Coast | RF4201 |
| Montero | Wicker Basket | RF4202 |
| | | |
| Moravia | Coastal | RF8602 |
| Moravia | Countryside | RF8600 |
| Moravia | Seabreeze | RF8601 |
| | | |
| Santa Cruz | Bunglehouse Blue | RF3101 |
| Santa Cruz | Manchester | RF3100 |
| Santa Cruz | Night Sky | RF3106 |
| Santa Cruz | Rainforest | RF3107 |
| | | |
| Santa Cruz Blackout | Bunglehouse Blue | RB102 |
| Santa Cruz Blackout | Manchester | RB101 |
| Santa Cruz Blackout | Night Sky | RB104 |
| Santa Cruz Blackout | Rainforest | RB103 |
| | | |
| Scala Blackout | Gray | R10005 |
| Scala Blackout | Off White | R10002 |
| Scala Blackout | Silver | R10004 |
| Scala Blackout | White | R10001 |
| | | |
| Sorrento | Bisque | RF35002 |
| Sorrento | Linen | RF35001 |
| Sorrento | Stucco | RF35003 |
| | | |
| Sunscreen 7000 | Birch | R1101 |
| Sunscreen 7000 | Graphite | R1107 |
| Sunscreen 7000 | Mushroom | R1102 |
| Sunscreen 7000 | Onyx | R1103 |
| Sunscreen 7000 | Sand | R1104 |
| Sunscreen 7000 | White | R1106 |
| | | |
| Tundra | Antique White | RD9 02 |
| Tundra | Dark Gray | RD9 05 |
| Tundra | Ice White | RD9 01 |
| Tundra | Oxford Jean | RD9 06 |
| Tundra | Sand | RD9 03 |
| Tundra | Whale | RD9 04 |
| | | |
| Tundra Blackout | Dark Gray | RB8 05 |
| Tundra Blackout | Ivory | RB8 02 |
| Tundra Blackout | Oxford Jean | RB8 06 |
| Tundra Blackout | Sand | RB8 03 |
| Tundra Blackout | Whale | RB8 04 |
| Tundra Blackout | White | RB8 01 |
| | | |
| Uptown | Sterling | R7902 |
| | | |
| Uptown | Sterling Room Darkening | R7901 |
| | | |
| World Textures 1 | Cyprus Coast | R4802 |
| World Textures 1 | Medina Mirage | R4803 |
| World Textures 1 | Medina Vision | R4806 |
| | | |
| World Textures 1 Blackout | Cypress Formal | R5001 |
| | | |
| World Textures 2 | Oslo Blend | R4902 |
| | | |
| World Textures 2 Blackout | Oslo Terrain | R5004 |

# COLOR CHART

*(Lead-time: 12 business day)*

| Decorative (Light Filtering) | | |
|---|---|---|
| **Material Name** | **Color Name** | **Color #** |
| Sheerweave 7250R | Blazer | P7250R RL7 |
| Sheerweave 7250R | Chiffon | P7250R RL4 |
| Sheerweave 7250R | Chrome | P7250R RL5 |
| Sheerweave 7250R | Earl Grey | P7250R RL6 |
| Sheerweave 7250R | Oyster | P7250R RL2 |
| Sheerweave 7250R | Raven | P7250R RL8 |
| Sheerweave 7250R | Sail | P7250R RL3 |
| Sheerweave 7250R | Swan | P7250R RL1 |
| | | |
| Sheerweave 7450 | Cotton | P7450 U80 |
| Sheerweave 7450 | Flint | P7450 U87 |
| Sheerweave 7450 | Parchment | P7450 U81 |
| Sheerweave 7450 | Pebble | P7450 U83 |
| Sheerweave 7450 | Seagrass | P7450 U84 |
| Sheerweave 7450 | Sesame | P7450 U82 |
| Sheerweave 7450 | Shale | P7450 U85 |
| Sheerweave 7450 | Spice | P7450 U86 |
| | | |
| Sheerweave 7650 | Bright White | P7650 U90 |
| Sheerweave 7650 | Coal | P7650 U97 |
| Sheerweave 7650 | Coffee | P7650 U96 |
| Sheerweave 7650 | Dove Grey | P7650 U93 |
| Sheerweave 7650 | Ivory | P7650 U99 |
| Sheerweave 7650 | Khaki | P7650 U92 |
| Sheerweave 7650 | Shell | P7650 U91 |
| Sheerweave 7650 | Taupe | P7650 U94 |
| Sheerweave 7650 | Thunder | P7650 U95 |
| | | |
| Sheerweave 7750R | Chalk | P7750R TL4 |
| Sheerweave 7750R | Concrete | P7750R TL3 |
| Sheerweave 7750R | Crystal | P7750R TL1 |
| Sheerweave 7750R | Graphite | P7750R TL5 |
| Sheerweave 7750R | Onyx | P7750R TL7 |
| Sheerweave 7750R | Pewter | P7750R TL6 |
| Sheerweave 7750R | Sand | P7750R TL2 |

| Blackout | | |
|---|---|---|
| **Material Name** | **Color Name** | **Color #** |
| Sunscreen (SW) 7000 | Canvas | R11 U67 |
| Sunscreen (SW) 7000 | Canyon | R11 V41 |
| Sunscreen (SW) 7000 | Cocoa | R11 U69 |
| Sunscreen (SW) 7000 | Wheat | R11 Q57 |
| | | |
| Sheerweave 7200R | Blazer | P7200R RB7 |
| Sheerweave 7200R | Chiffon | P7200R RB4 |
| Sheerweave 7200R | Chrome | P7200R RB5 |
| Sheerweave 7200R | Earl Grey | P7200R RB6 |
| Sheerweave 7200R | Oyster | P7200R RB2 |
| Sheerweave 7200R | Raven | P7200R RB8 |
| Sheerweave 7200R | Sail | P7200R RB3 |
| Sheerweave 7200R | Swan | P7200R RB1 |
| | | |
| Sheerweave 7400 | Cotton | P7400 U80 |
| Sheerweave 7400 | Flint | P7400 U87 |
| Sheerweave 7400 | Parchment | P7400 U81 |
| Sheerweave 7400 | Pebble | P7400 U83 |
| Sheerweave 7400 | Seagrass | P7400 U84 |
| Sheerweave 7400 | Sesame | P7400 U82 |
| Sheerweave 7400 | Shale | P7400 U85 |
| Sheerweave 7400 | Spice | P7400 U86 |
| | | |
| Sheerweave 7500 | Cloud | P7500 R39 |
| Sheerweave 7500 | Dune | P7500 R17 |
| Sheerweave 7500 | Ice | P7500 R13 |
| Sheerweave 7500 | Limestone | P7500 R41 |
| Sheerweave 7500 | Midnight | P7500 R22 |
| Sheerweave 7500 | Midnightx2 | P7500 R99 |
| Sheerweave 7500 | Mist | P7500 R97 |
| Sheerweave 7500 | Nimbus | P7500 R42 |
| Sheerweave 7500 | Odyssey | P7500 R20 |
| Sheerweave 7500 | Orient | P7500 R21 |
| Sheerweave 7500 | Orientx2 | P7500 S97 |
| Sheerweave 7500 | Porcelain | P7500 R40 |
| Sheerweave 7500 | Stone | P7500 R19 |
| Sheerweave 7500 | Tundra | P7500 R43 |

| Blackout | | |
|---|---|---|
| **Material Name** | **Color Name** | **Color #** |
| Sheerweave 7500R | Cloud | P7500R R45 |
| Sheerweave 7500R | Dune | P7500R R51 |
| Sheerweave 7500R | Ice | P7500R R44 |
| Sheerweave 7500R | Limestone | P7500R R47 |
| Sheerweave 7500R | Midnight | P7500R R55 |
| Sheerweave 7500R | Mist | P7500R R48 |
| Sheerweave 7500R | Nimbus | P7500R R49 |
| Sheerweave 7500R | Odyssey | P7500R R53 |
| Sheerweave 7500R | Orient | P7500R R54 |
| Sheerweave 7500R | Porcelain | P7500R R46 |
| Sheerweave 7500R | Stone | P7500R R52 |
| Sheerweave 7500R | Tundra | P7500R R50 |
| | | |
| Sheerweave 7600 | Bright White | P7600 U90 |
| Sheerweave 7600 | Coal | P7600 U97 |
| Sheerweave 7600 | Coffee | P7600 U96 |
| Sheerweave 7600 | Dove Grey | P7600 U93 |
| Sheerweave 7600 | Ivory | P7600 U99 |
| Sheerweave 7600 | Khaki | P7600 U92 |
| Sheerweave 7600 | Shell | P7600 U91 |
| Sheerweave 7600 | Taupe | P7600 U94 |
| Sheerweave 7600 | Thunder | P7600 U95 |
| | | |
| Sheerweave 7700R | Chalk | P7700R TB4 |
| Sheerweave 7700R | Concrete | P7700R TB3 |
| Sheerweave 7700R | Crystal | P7700R TB1 |
| Sheerweave 7700R | Graphite | P7700R TB5 |
| Sheerweave 7700R | Onyx | P7700R TB7 |
| Sheerweave 7700R | Pewter | P7700R TB6 |
| Sheerweave 7700R | Sand | P7700R TB2 |

# COLOR CHART

*(Lead-time: 12 business day)*

| Screen | | |
|---|---|---|
| **Material Name** | **Color Name** | **Color #** |
| 1% Sheerweave 2500 | Beige | R01 Q20 |
| 1% Sheerweave 2500 | Beige/Pearl Gray | R01 Q21 |
| 1% Sheerweave 2500 | Charcoal/Gray | R01 V22 |
| 1% Sheerweave 2500 | Pearl Gray | R01 V20 |
| | | |
| 1% Sheerweave 2701 | Charcoal | RS21 V21 |
| 1% Sheerweave 2701 | Charcoal/Brown | RS21 V66 |
| 1% Sheerweave 2701 | Charcoal/Gray | RS21 V22 |
| 1% Sheerweave 2701 | Charcoal/Slate | RS21 V64 |
| 1% Sheerweave 2701 | Charcoal/Taupe | RS21 V65 |
| | | |
| 1% Sheerweave 4901 | Birch | P4901 Q25 |
| 1% Sheerweave 4901 | Chalk | P4901 P06 |
| 1% Sheerweave 4901 | Chalk/Black | P4901 P25 |
| 1% Sheerweave 4901 | Chalk/Wheat | P4901 P26 |
| 1% Sheerweave 4901 | Cobblestone | P4901 Q26 |
| 1% Sheerweave 4901 | Ebony | P4901 V10 |
| 1% Sheerweave 4901 | Flaxen | P4901 Q22 |
| 1% Sheerweave 4901 | Kettal Grey | P4901 Q07 |
| 1% Sheerweave 4901 | Pewter/Chalk | P4901 V03 |
| 1% Sheerweave 4901 | Slate | P4901 V28 |
| 1% Sheerweave 4901 | Soft Grey | P4901 Q27 |
| 1% Sheerweave 4901 | Tobacco | P4901 Q16 |
| 1% Sheerweave 4901 | Whitesands | P4901 Q23 |
| | | |
| 1% Sheerweave 5000 | Jute/Latte | P5001 R87 |
| 1% Sheerweave 5000 | Jute/Parchment | P5001 R85 |
| | | |
| 3% Sheerweave 2410 | Beige | R06 Q20 |
| 3% Sheerweave 2410 | Beige/Pearl Gray | R06 Q21 |
| 3% Sheerweave 2410 | Charcoal/Gray | R06 V22 |
| 3% Sheerweave 2410 | Pearl Gray | R06 V20 |
| | | |
| 3% Sheerweave 2703 | Charcoal | P2703 V21 |
| 3% Sheerweave 2703 | Charcoal/Brown | P2703 V66 |
| 3% Sheerweave 2703 | Charcoal/Gray | P2703 V22 |
| 3% Sheerweave 2703 | Charcoal/Slate | P2703 V64 |
| 3% Sheerweave 2703 | Charcoal/Taupe | P2703 V65 |
| | | |
| 3% Sheerweave 4400 | Ash | RS2 U64 |
| 3% Sheerweave 4400 | Ebony | RS2 U65 |
| 3% Sheerweave 4400 | Granite | RS2 U62 |
| 3% Sheerweave 4400 | Pebblestone | RS2 U60 |
| 3% Sheerweave 4400 | Tobacco | RS2 U66 |
| | | |
| 3% Sheerweave 4600 | Cappuccino | P4600 V95 |
| 3% Sheerweave 4600 | Chalk | P4600 P06 |
| 3% Sheerweave 4600 | Dark Bronze | P4600 V96 |
| 3% Sheerweave 4600 | Ebony | P4600 V10 |
| 3% Sheerweave 4600 | Ecru | P4600 Q59 |
| 3% Sheerweave 4600 | Golden Sand | P4600 Q60 |
| 3% Sheerweave 4600 | Granite | P4600 P10 |
| 3% Sheerweave 4600 | Linen | P4600 U32 |
| 3% Sheerweave 4600 | Pewter | P4600 V07 |
| 3% Sheerweave 4600 | Sandstone | P4600 V44 |

| Screen | | |
|---|---|---|
| **Material Name** | **Color Name** | **Color #** |
| 3% Sheerweave 4903 | Birch | P4903 Q25 |
| 3% Sheerweave 4903 | Chalk | P4903 P06 |
| 3% Sheerweave 4903 | Chalk/Black | P4903 P25 |
| 3% Sheerweave 4903 | Chalk/Wheat | P4903 P26 |
| 3% Sheerweave 4903 | Cobblestone | P4903 Q26 |
| 3% Sheerweave 4903 | Ebony | P4903 V10 |
| 3% Sheerweave 4903 | Flaxen | P4903 Q22 |
| 3% Sheerweave 4903 | Kettal Grey | P4903 Q07 |
| 3% Sheerweave 4903 | Pewter/Chalk | P4903 V03 |
| 3% Sheerweave 4903 | Slate | P4903 V28 |
| 3% Sheerweave 4903 | Soft Grey | P4903 Q27 |
| 3% Sheerweave 4903 | Tobacco | P4903 Q16 |
| 3% Sheerweave 4903 | Whitesands | P4903 Q23 |
| | | |
| 3% Sheerweave 5000 | Chenille/Marshmallow | R07 R89 |
| 3% Sheerweave 5000 | Chenille/Pearl | R07 R90 |
| 3% Sheerweave 5000 | Linen/Burlap | R07 U11 |
| 3% Sheerweave 5000 | Linen/Cranberry | R07 R11 |
| 3% Sheerweave 5000 | Linen/Topaz | R07 U10 |
| 3% Sheerweave 5000 | Wicker/Straw | R07 R93 |
| | | |
| 5% Sheerweave 2000 | Bone | P2000 Q05 |
| 5% Sheerweave 2000 | Bone/Platinum | P2000 Q06 |
| 5% Sheerweave 2000 | Bronze | P2000 Q10 |
| 5% Sheerweave 2000 | Charcoal | P2000 V21 |
| 5% Sheerweave 2000 | Charcoal/Chestnut | P2000 V24 |
| 5% Sheerweave 2000 | Charcoal/Gray | P2000 V22 |
| 5% Sheerweave 2000 | Platinum | P2000 V04 |
| 5% Sheerweave 2000 | White | P2000 P02 |
| 5% Sheerweave 2000 | White/Bone | P2000 P04 |
| 5% Sheerweave 2000 | White/Platinum | P2000 P05 |
| | | |
| 5% Sheerweave 2390 | Beige | RS1 Q20 |
| 5% Sheerweave 2390 | Beige/Pearl Gray | RS1 Q21 |
| 5% Sheerweave 2390 | Pearl Gray | RS1 V20 |
| | | |
| 5% Sheerweave 2705 | Charcoal | P2705 V21 |
| 5% Sheerweave 2705 | Charcoal/Brown | P2705 V66 |
| 5% Sheerweave 2705 | Charcoal/Gray | P2705 V22 |
| 5% Sheerweave 2705 | Charcoal/Slate | P2705 V64 |
| 5% Sheerweave 2705 | Charcoal/Taupe | P2705 V65 |
| 5% Sheerweave 2705 | Oyster | P2705 P12 |
| 5% Sheerweave 2705 | Oyster/Beige | P2705 P13 |
| 5% Sheerweave 2705 | Oyster/Charcoal | P2705 P28 |
| 5% Sheerweave 2705 | Oyster/Chestnut | P2705 P92 |
| 5% Sheerweave 2705 | Oyster/Pearl Gray | P2705 P14 |
| 5% Sheerweave 2705 | Oyster/Pewter | P2705 P91 |
| | | |
| 5% Sheerweave 4000 | Ash | R09 U64 |
| 5% Sheerweave 4000 | Ebony | R09 U65 |
| 5% Sheerweave 4000 | Pebblestone | R09 U60 |
| 5% Sheerweave 4000 | Pewter | R09 U63 |
| 5% Sheerweave 4000 | Tobacco | R09 U66 |

| Screen | | |
|---|---|---|
| **Material Name** | **Color Name** | **Color #** |
| 5% Sheerweave 4500 | Cappuccino | P4500 V95 |
| 5% Sheerweave 4500 | Chalk | P4500 P06 |
| 5% Sheerweave 4500 | Dark Bronze | P4500 V96 |
| 5% Sheerweave 4500 | Ebony | P4500 V10 |
| 5% Sheerweave 4500 | Ecru | P4500 Q59 |
| 5% Sheerweave 4500 | Golden Sand | P4500 Q60 |
| 5% Sheerweave 4500 | Granite | P4500 P10 |
| 5% Sheerweave 4500 | Linen | P4500 U32 |
| 5% Sheerweave 4500 | Pewter | P4500 V07 |
| 5% Sheerweave 4500 | Sandstone | P4500 V44 |
| | | |
| 5% Sheerweave 5000 | Aura/Poetry | R10 S84 |
| 5% Sheerweave 5000 | Coffee | R10 S82 |
| 5% Sheerweave 5000 | Contour/Smudge | R10 S77 |
| 5% Sheerweave 5000 | Marble/Sand | R10 Q43 |
| 5% Sheerweave 5000 | Wicker/Mushroom | R10 Q51 |
| | | |
| 7% Sheerweave 5000 | Twine/Jewel | R34 S73 |
| | | |
| 10% Sheerweave 2360 | Beige | P2360 Q20 |
| 10% Sheerweave 2360 | Beige/Pearl Gray | P2360 Q21 |
| 10% Sheerweave 2360 | Charcoal | P2360 V21 |
| 10% Sheerweave 2360 | Charcoal/Alpaca | P2360 V32 |
| 10% Sheerweave 2360 | Charcoal/Chestnut | P2360 V24 |
| 10% Sheerweave 2360 | Charcoal/Gray | P2360 V22 |
| 10% Sheerweave 2360 | Oyster | P2360 P12 |
| 10% Sheerweave 2360 | Oyster/Beige | P2360 P13 |
| 10% Sheerweave 2360 | Oyster/Pearl Gray | P2360 P14 |
| 10% Sheerweave 2360 | Pearl Gray | P2360 V20 |
| | | |
| 10% Sheerweave 4100 | Alabaster | P4100 U59 |
| 10% Sheerweave 4100 | Ash | P4100 U64 |
| 10% Sheerweave 4100 | Chalk | P4100 U58 |
| 10% Sheerweave 4100 | Ebony | P4100 U65 |
| 10% Sheerweave 4100 | Granite | P4100 U62 |
| 10% Sheerweave 4100 | Greystone | P4100 U61 |
| 10% Sheerweave 4100 | Pebblestone | P4100 U60 |
| 10% Sheerweave 4100 | Pewter | P4100 U63 |
| 10% Sheerweave 4100 | Tobacco | P4100 U66 |
| | | |
| 10% Sheerweave 5000 | Crepe/Toasted Coconut | R26 U16 |
| 10% Sheerweave 5000 | Seaglass/Chardonnay | R26 U28 |
| 10% Sheerweave 5000 | Seaglass/Crystal | R26 U29 |
| 10% Sheerweave 5000 | Seaglass/Silver | R26 U24 |

## Group 1 – Clutch Roller with Beaded Chain

• Blackout Solid (72")

| WIDTH TO: | 24" | 30" | 36" | 48" | 60" | 72" | 84" | 96" | 108" | 120" | 132" | 144" |
|---|---|---|---|---|---|---|---|---|---|---|---|---|
| HEIGHT TO: | | | | | | | | | | | | |
| 36" | $89 | 91 | 93 | 109 | 123 | 142 | 169 | 198 | 210 | 228 | 239 | 256 |
| 48" | 93 | 95 | 97 | 112 | 130 | 151 | 181 | 211 | 228 | 246 | 260 | 277 |
| 61" | 104 | 107 | 109 | 118 | 138 | 161 | 193 | 226 | 245 | 265 | 283 | 301 |
| 72" | 112 | 115 | 117 | 134 | 158 | 171 | 207 | 241 | 260 | 283 | 302 | 322 |
| 84" | 116 | 118 | 121 | 143 | 168 | 183 | 220 | 256 | 278 | 301 | 323 | 344 |
| 96" | 121 | 125 | 127 | 149 | 176 | 193 | 231 | 270 | 301 | 319 | 343 | 363 |
| 108" | 127 | 130 | 133 | 158 | 186 | 204 | 243 | 286 | 311 | 339 | 362 | 390 |
| 120" | 132 | 135 | 138 | 165 | 194 | 215 | 255 | 302 | 329 | 357 | 382 | 413 |
| 132" | 137 | 142 | 144 | 173 | 205 | 225 | 268 | 315 | 344 | 375 | 402 | 434 |
| 144" | 144 | 148 | 151 | 180 | 213 | 237 | 279 | 330 | 360 | 394 | 423 | 454 |

**2-on-1 Shades Option:** A Two-on-One shade is two shades under one continuous cassette valance. To price a 2-on-1, determine the price of each individual shade then add in the price of two individual cassette valances using the width of each shade. The total sum for the 2-on-1 shade is the sum of both shades and both cassettes. Clutch position only available on the outside of each shade (left shade - left side, right shade - right side).

NOTE: There is a 1/2" gap between the two shades. Please refer to the Product Size Specifications for individual shade sizes. Available with the Beaded Chain Clutch System & RemoteLift Motorization only.

Metal bead chain & Heat sealed hem are strongly recommended on shade size equal, wider than 108" or longer than 90", to improve the operation, and appearance of the shade, minimizing waviness, twisting, cupping & curling, especially on shades with railroaded material.

Spring assist clutch system (2-1/2" tube only) aids in raising heavy shades by reducing the pull force by up to 40%. Highly recommend on large shades greater than 44.4 SQ.FT. with shade width greater than 60". Please note Spring Assist is not available with cassettes or 3" fascia.

### TouchLift Cordless Option Surcharge – $81

### Small Cassette Valance Option Surcharge (with fabric insert) – White, Vanilla, Bronze, and Black

| WIDTH TO: | 24" | 30" | 36" | 48" | 60" | 72" | 84" | 96" | 108" | 120" | 132" | 144" |
|---|---|---|---|---|---|---|---|---|---|---|---|---|
| | $54 | 60 | 67 | 78 | 89 | 101 | 112 | 125 | 140 | 155 | 166 | 175 |

### Medium Cassette Valance Option Surcharge (with fabric insert) – White, Vanilla, Silver, Bronze, and Black

| WIDTH TO: | 24" | 30" | 36" | 48" | 60" | 72" | 84" | 96" | 108" | 120" | 132" | 144" |
|---|---|---|---|---|---|---|---|---|---|---|---|---|
| | $59 | 67 | 76 | 91 | 103 | 114 | 121 | 134 | 146 | 159 | 172 | 185 |

### Large Cassette Valance Option Surcharge (with fabric insert) – White, Vanilla, Silver, Bronze, and Black

| WIDTH TO: | 24" | 30" | 36" | 48" | 60" | 72" | 84" | 96" | 108" | 120" | 132" | 144" |
|---|---|---|---|---|---|---|---|---|---|---|---|---|
| | $63 | 69 | 80 | 97 | 112 | 121 | 132 | 144 | 155 | 166 | 179 | 187 |

NOTE: Maximum overall width for 2-on-1 is 144" on all 3 cassette sizes.

### Fascia Option Surcharge – White, Vanilla, Silver, Bronze, Black

| WIDTH TO: | 24" | 30" | 36" | 48" | 60" | 72" | 84" | 96" | 108" | 120" | 132" | 144" |
|---|---|---|---|---|---|---|---|---|---|---|---|---|
| 3" Flat | $53 | 56 | 61 | 70 | 78 | 89 | 99 | 111 | 122 | 135 | 148 | 163 |
| 4" Flat | 57 | 61 | 67 | 74 | 87 | 101 | 114 | 126 | 139 | 151 | 164 | 179 |

**Deluxe Valance Surcharge** (standard height 3-5/8") Direction of fabric insert follows shade installed below. If valance is wider than material width, and shade below is not railroaded; valance will be made with a center seamed fabric insert. See deluxe valance section for more details.

| WIDTH TO: | 24" | 30" | 36" | 48" | 60" | 72" | 84" | 96" | 108" | 120" | 132" | 144" |
|---|---|---|---|---|---|---|---|---|---|---|---|---|
| Fabric Insert | $29 | 32 | 35 | 41 | 48 | 51 | 53 | 59 | 64 | 65 | 71 | 76 |

**Fabric Valance** (standard height 6") For valances wider than material width, material will be railroaded. Includes all Roller Shade materials. (Non-railroaded with center seam available upon request.) See fabric valance section for more details.

| WIDTH TO: | 24" | 30" | 36" | 48" | 60" | 72" | 84" | 96" | 108" | 120" | 132" | 144" |
|---|---|---|---|---|---|---|---|---|---|---|---|---|
| IB 4" & 6" | $83 | 89 | 98 | 109 | 121 | 141 | 161 | 185 | 205 | 225 | 245 | 265 |
| IB 8" & 12" | 91 | 101 | 109 | 143 | 162 | 177 | 201 | 226 | 248 | 274 | 297 | 323 |
| OB 4" & 6" | $113 | 124 | 134 | 151 | 170 | 185 | 210 | 233 | 257 | 286 | 312 | 340 |
| OB 8" & 12" | 126 | 137 | 151 | 172 | 195 | 215 | 243 | 272 | 301 | 337 | 369 | 403 |

**Tube Size Upgrade Surcharge** – applies only if upgraded to a larger tube. This option only available for shades without top treatment.

| TUBE SIZE: | 1-1/2" | 2" | 2-1/2" | 3-1/4" |
|---|---|---|---|---|
| | $33 | 62 | 97 | 108 |

**See page 18 for motorization surcharges**

## Group 2 – Clutch Roller with Beaded Chain

- 7% Global Screen (118")
- Cararra (110")
- Cararra Blackout (110")*
- Hayworth (98")
- Scala Blackout (110")
- Sorrento (108")
- Sheerweave 7500R (118")
- Tundra (94")
- Tundra Blackout (94")

| WIDTH TO: | 24" | 30" | 36" | 48" | 60" | 72" | 84" | 96" | 108" | 120" | 132" | 144" |
|---|---|---|---|---|---|---|---|---|---|---|---|---|
| HEIGHT TO: | | | | | | | | | | | | |
| 36" | $104 | 108 | 109 | 136 | 154 | 177 | 208 | 245 | 265 | 285 | 309 | 328 |
| 48" | 114 | 117 | 119 | 150 | 169 | 197 | 233 | 274 | 300 | 324 | 350 | 370 |
| 61" | 126 | 130 | 133 | 159 | 186 | 218 | 256 | 306 | 330 | 359 | 389 | 418 |
| 72" | 141 | 144 | 147 | 185 | 219 | 239 | 282 | 335 | 367 | 399 | 428 | 464 |
| 84" | 152 | 156 | 159 | 201 | 236 | 260 | 308 | 362 | 400 | 437 | 471 | 511 |
| 96" | 162 | 166 | 169 | 217 | 254 | 283 | 331 | 394 | 431 | 472 | 509 | 553 |
| 108" | 171 | 176 | 180 | 231 | 274 | 302 | 353 | 419 | 462 | 512 | 553 | 595 |
| 120" | 182 | 186 | 190 | 246 | 293 | 321 | 380 | 450 | 499 | 548 | 594 | 642 |
| 132" | 191 | 195 | 201 | 260 | 310 | 344 | 402 | 478 | 532 | 580 | 634 | 685 |
| 144" | 202 | 207 | 211 | 275 | 326 | 365 | 425 | 507 | 564 | 618 | 676 | 723 |

**2-on-1 Shades Option:** A Two-on-One shade is two shades under one continuous cassette valance. To price a 2-on-1, determine the price of each individual shade then add in the price of two individual cassette valances using the width of each shade. The total sum for the 2-on-1 shade is the sum of both shades and both cassettes. Clutch position only available on the outside of each shade (left shade - left side, right shade - right side).

NOTE: There is a 1/2" gap between the two shades. Please refer to the Product Size Specifications for individual shade sizes. Available with the Beaded Chain Clutch System & RemoteLift Motorization only.

* Stainless steel bead chain is **REQUIRED** under skyline clutch when shade size is 108" x 90" and greater on patterns with *.

Heat sealed hem is strongly recommended on shade size equal, wider than 108" or longer than 90", to improve the appearance of the shade, minimizing waviness, twisting, cupping & curling, especially on shades with railroaded material.

Spring assist clutch system (2-1/2" tube only) aids in raising heavy shades by reducing the pull force by up to 40%. Highly recommend on large shades greater than 44.4 SQ.FT. with shade width greater than 60". Please note Spring Assist is not available with cassettes or 3" fascia.

### TouchLift Cordless Option Surcharge – $81

### Small Cassette Valance Option Surcharge (with fabric insert) – White, Vanilla, Bronze, and Black

| WIDTH TO: | 24" | 30" | 36" | 48" | 60" | 72" | 84" | 96" | 108" | 120" | 132" | 144" |
|---|---|---|---|---|---|---|---|---|---|---|---|---|
| | $54 | 60 | 67 | 78 | 89 | 101 | 112 | 125 | 140 | 155 | 166 | 175 |

### Medium Cassette Valance Option Surcharge (with fabric insert) – White, Vanilla, Silver, Bronze, and Black

| WIDTH TO: | 24" | 30" | 36" | 48" | 60" | 72" | 84" | 96" | 108" | 120" | 132" | 144" |
|---|---|---|---|---|---|---|---|---|---|---|---|---|
| | $59 | 67 | 76 | 91 | 103 | 114 | 121 | 134 | 146 | 159 | 172 | 185 |

### Large Cassette Valance Option Surcharge (with fabric insert) – White, Vanilla, Silver, Bronze, and Black

| WIDTH TO: | 24" | 30" | 36" | 48" | 60" | 72" | 84" | 96" | 108" | 120" | 132" | 144" |
|---|---|---|---|---|---|---|---|---|---|---|---|---|
| | $63 | 69 | 80 | 97 | 112 | 121 | 132 | 144 | 155 | 166 | 179 | 187 |

NOTE: Maximum overall width for 2-on-1 is 144" on all 3 cassette sizes.

### Fascia Option Surcharge – White, Vanilla, Silver, Bronze, Black

| WIDTH TO: | 24" | 30" | 36" | 48" | 60" | 72" | 84" | 96" | 108" | 120" | 132" | 144" |
|---|---|---|---|---|---|---|---|---|---|---|---|---|
| 3" Flat | $53 | 56 | 61 | 70 | 78 | 89 | 99 | 111 | 122 | 135 | 148 | 163 |
| 4" Flat | 57 | 61 | 67 | 74 | 87 | 101 | 114 | 126 | 139 | 151 | 164 | 179 |

**Deluxe Valance Surcharge** (standard height 3-5/8") Direction of fabric insert follows shade installed below. If valance is wider than material width, and shade below is not railroaded; valance will be made with a center seamed fabric insert. See deluxe valance section for more details.

| WIDTH TO: | 24" | 30" | 36" | 48" | 60" | 72" | 84" | 96" | 108" | 120" | 132" | 144" |
|---|---|---|---|---|---|---|---|---|---|---|---|---|
| Fabric Insert | $29 | 32 | 35 | 41 | 48 | 51 | 53 | 59 | 64 | 65 | 71 | 76 |

**Fabric Valance** (standard height 6") For valances wider than material width, material will be railroaded. Includes all Roller Shade materials. (Non-railroaded with center seam available upon request.) See fabric valance section for more details.

| WIDTH TO: | 24" | 30" | 36" | 48" | 60" | 72" | 84" | 96" | 108" | 120" | 132" | 144" |
|---|---|---|---|---|---|---|---|---|---|---|---|---|
| IB 4" & 6" | $83 | 89 | 98 | 109 | 121 | 141 | 161 | 185 | 205 | 225 | 245 | 265 |
| IB 8" & 12" | 91 | 101 | 109 | 143 | 162 | 177 | 201 | 226 | 248 | 274 | 297 | 323 |
| OB 4" & 6" | $113 | 124 | 134 | 151 | 170 | 185 | 210 | 233 | 257 | 286 | 312 | 340 |
| OB 8" & 12" | 126 | 137 | 151 | 172 | 195 | 215 | 243 | 272 | 301 | 337 | 369 | 403 |

**Tube Size Upgrade Surcharge** – applies only if upgraded to a larger tube. This option only available for shades without top treatment.

| TUBE SIZE: | 1-1/2" | 2" | 2-1/2" | 3-1/4" |
|---|---|---|---|---|
| | $33 | 62 | 97 | 108 |

**See page 18 for motorization surcharges**

## Group 3 – Clutch Roller with Beaded Chain

- 1% Toka (118")*
- 3% E Screen (122")
- 5% E Screen (122")
- 5% Sheerweave 2390 (126")
- 5% Sheerweave 4000 (126")*
- 10% E Screen (122")
- 10% Sheerweave 2360 (126")
- 10% Sheerweave 4100 (98")*
- Linview (122")**
- Montero (94")
- Santa Cruz (94")
- Santa Cruz Blackout (94")*
- Sheerweave 7250R (118")
- Sheerweave 7500 (118")
- Sheerweave 7750R (118")
- Sheerweave 7700R (118")*

| WIDTH TO: | 24" | 30" | 36" | 48" | 60" | 72" | 84" | 96" | 108" | 120" | 132" | 144" |
|---|---|---|---|---|---|---|---|---|---|---|---|---|
| HEIGHT TO: | | | | | | | | | | | | |
| 36" | $112 | 115 | 117 | 151 | 165 | 197 | 229 | 273 | 295 | 322 | 345 | 369 |
| 48" | 124 | 126 | 130 | 158 | 184 | 223 | 261 | 309 | 338 | 365 | 396 | 426 |
| 61" | 137 | 141 | 143 | 172 | 200 | 248 | 290 | 346 | 378 | 416 | 445 | 481 |
| 72" | 161 | 165 | 168 | 210 | 250 | 274 | 322 | 382 | 419 | 457 | 498 | 539 |
| 84" | 169 | 174 | 178 | 230 | 274 | 302 | 352 | 417 | 462 | 505 | 547 | 594 |
| 96" | 185 | 189 | 193 | 246 | 294 | 328 | 380 | 455 | 502 | 550 | 600 | 645 |
| 108" | 195 | 201 | 205 | 264 | 318 | 353 | 417 | 488 | 541 | 595 | 652 | 705 |
| 120" | 209 | 214 | 218 | 282 | 341 | 380 | 441 | 531 | 583 | 643 | 705 | 754 |
| 132" | 220 | 226 | 231 | 300 | 362 | 408 | 478 | 567 | 624 | 689 | 754 | 812 |
| 144" | 233 | 238 | 243 | 319 | 386 | 435 | 507 | 603 | 667 | 734 | 799 | 861 |

**2-on-1 Shades Option:** A Two-on-One shade is two shades under one continuous cassette valance. To price a 2-on-1, determine the price of each individual shade then add in the price of two individual cassette valances using the width of each shade. The total sum for the 2-on-1 shade is the sum of both shades and both cassettes. Clutch position only available on the outside of each shade (left shade - left side, right shade - right side).

NOTE: There is a 1/2" gap between the two shades. Please refer to the Product Size Specifications for individual shade sizes. Available with the Beaded Chain Clutch System & RemoteLift Motorization only.

***** Stainless steel bead chain is **REQUIRED** under skyline clutch when shade size is 108" x 90" and greater on patterns with *****.

Heat sealed hem is strongly recommended on shade size equal, wider than 108" or longer than 90", to improve the appearance of the shade, minimizing waviness, twisting, cupping & curling, especially on shades with railroaded material.

**Heat sealed hem is required beyond 120" x 120".

Spring assist clutch system (2-1/2" tube only) aids in raising heavy shades by reducing the pull force by up to 40%. Highly recommend on large shades greater than 44.4 SQ.FT. with shade width greater than 60". Please note Spring Assist is not available with cassettes or 3" fascia.

### TouchLift Cordless Option Surcharge – $81

**Small Cassette Valance Option Surcharge (with fabric insert)** – White, Vanilla, Bronze, and Black

| WIDTH TO: | 24" | 30" | 36" | 48" | 60" | 72" | 84" | 96" | 108" | 120" | 132" | 144" |
|---|---|---|---|---|---|---|---|---|---|---|---|---|
| | $54 | 60 | 67 | 78 | 89 | 101 | 112 | 125 | 140 | 155 | 166 | 175 |

**Medium Cassette Valance Option Surcharge (with fabric insert)** – White, Vanilla, Silver, Bronze, and Black

| WIDTH TO: | 24" | 30" | 36" | 48" | 60" | 72" | 84" | 96" | 108" | 120" | 132" | 144" |
|---|---|---|---|---|---|---|---|---|---|---|---|---|
| | $59 | 67 | 76 | 91 | 103 | 114 | 121 | 134 | 146 | 159 | 172 | 185 |

**Large Cassette Valance Option Surcharge (with fabric insert)** – White, Vanilla, Silver, Bronze, and Black

| WIDTH TO: | 24" | 30" | 36" | 48" | 60" | 72" | 84" | 96" | 108" | 120" | 132" | 144" |
|---|---|---|---|---|---|---|---|---|---|---|---|---|
| | $63 | 69 | 80 | 97 | 112 | 121 | 132 | 144 | 155 | 166 | 179 | 187 |

NOTE: Maximum overall width for 2-on-1 is 144" on all 3 cassette sizes.

**Fascia Option Surcharge** – White, Vanilla, Silver, Bronze, Black

| WIDTH TO: | 24" | 30" | 36" | 48" | 60" | 72" | 84" | 96" | 108" | 120" | 132" | 144" |
|---|---|---|---|---|---|---|---|---|---|---|---|---|
| 3" Flat | $53 | 56 | 61 | 70 | 78 | 89 | 99 | 111 | 122 | 135 | 148 | 163 |
| 4" Flat | 57 | 61 | 67 | 74 | 87 | 101 | 114 | 126 | 139 | 151 | 164 | 179 |

**Deluxe Valance Surcharge** (standard height 3-5/8") Direction of fabric insert follows shade installed below. If valance is wider than material width, and shade below is not railroaded; valance will be made with a center seamed fabric insert. See deluxe valance section for more details.

| WIDTH TO: | 24" | 30" | 36" | 48" | 60" | 72" | 84" | 96" | 108" | 120" | 132" | 144" |
|---|---|---|---|---|---|---|---|---|---|---|---|---|
| Fabric Insert | $29 | 32 | 35 | 41 | 48 | 51 | 53 | 59 | 64 | 65 | 71 | 76 |

**Fabric Valance** (standard height 6") For valances wider than material width, material will be railroaded. Includes all Roller Shade materials. (Non-railroaded with center seam available upon request.) See fabric valance section for more details.

| WIDTH TO: | 24" | 30" | 36" | 48" | 60" | 72" | 84" | 96" | 108" | 120" | 132" | 144" |
|---|---|---|---|---|---|---|---|---|---|---|---|---|
| IB 4" & 6" | $83 | 89 | 98 | 109 | 121 | 141 | 161 | 185 | 205 | 225 | 245 | 265 |
| IB 8" & 12" | 91 | 101 | 109 | 143 | 162 | 177 | 201 | 226 | 248 | 274 | 297 | 323 |
| OB 4" & 6" | $113 | 124 | 134 | 151 | 170 | 185 | 210 | 233 | 257 | 286 | 312 | 340 |
| OB 8" & 12" | 126 | 137 | 151 | 172 | 195 | 215 | 243 | 272 | 301 | 337 | 369 | 403 |

**Tube Size Upgrade Surcharge** – applies only if upgraded to a larger tube. This option only available for shades without top treatment.

| TUBE SIZE: | 1-1/2" | 2" | 2-1/2" | 3-1/4" |
|---|---|---|---|---|
| | $33 | 62 | 97 | 108 |

**See page 18 for motorization surcharges**

## Group 4 – Clutch Roller with Beaded Chain

- 1% E Screen (122")
- 1% Sheerweave 5000 (98")*
- 3% M Screen (122")
- 3% Sheerweave 2410 (126")*
- 3% Sheerweave 2703 (126")*
- 3% Sheerweave 4400 (126")*
- 3% Sheerweave 4903 (98")*
- 3% Sheerweave 5000 (98")*
- 3% T Screen (98")
- 5% M Screen Deco (98")
- 5% Sheerweave 2000 (126")
- 5% Sheerweave 2705 (126")*
- 5% Sheerweave 4500 (126")*
- 5% Sheerweave 5000 (98")*
- 7% Sheerweave 5000 (98")*
- 10% Sheerweave 5000 (98")*
- Avila R Blackout (118")
- Illusion (72")
- Linview Blackout (94")
- Sheerweave 7200R (118")

| WIDTH TO: | 24" | 30" | 36" | 48" | 60" | 72" | 84" | 96" | 108" | 120" | 132" | 144" |
|---|---|---|---|---|---|---|---|---|---|---|---|---|
| HEIGHT TO: | | | | | | | | | | | | |
| 36" | $116 | 118 | 121 | 154 | 180 | 211 | 247 | 293 | 319 | 349 | 372 | 398 |
| 48" | 127 | 130 | 133 | 163 | 201 | 241 | 284 | 335 | 368 | 395 | 431 | 489 |
| 61" | 140 | 144 | 147 | 180 | 207 | 269 | 316 | 378 | 414 | 453 | 488 | 527 |
| 72" | 165 | 168 | 172 | 226 | 271 | 300 | 352 | 419 | 458 | 505 | 546 | 595 |
| 84" | 177 | 183 | 186 | 250 | 299 | 331 | 387 | 459 | 509 | 555 | 611 | 657 |
| 96" | 191 | 195 | 201 | 268 | 323 | 362 | 419 | 503 | 560 | 618 | 662 | 721 |
| 108" | 207 | 211 | 217 | 290 | 350 | 392 | 462 | 542 | 611 | 669 | 736 | 787 |
| 120" | 220 | 226 | 230 | 310 | 377 | 420 | 496 | 586 | 657 | 715 | 787 | 849 |
| 132" | 232 | 238 | 243 | 331 | 401 | 452 | 536 | 628 | 706 | 774 | 846 | 915 |
| 144" | 244 | 251 | 257 | 352 | 428 | 483 | 569 | 670 | 747 | 821 | 909 | 982 |

**2-on-1 Shades Option:** A Two-on-One shade is two shades under one continuous cassette valance. To price a 2-on-1, determine the price of each individual shade then add in the price of two individual cassette valances using the width of each shade. The total sum for the 2-on-1 shade is the sum of both shades and both cassettes. Clutch position only available on the outside of each shade (left shade - left side, right shade - right side).

NOTE: There is a 1/2" gap between the two shades. Please refer to the Product Size Specifications for individual shade sizes. Available with the Beaded Chain Clutch System & RemoteLift Motorization only.

***** Stainless steel bead chain is **REQUIRED** under skyline clutch when shade size is 108" x 90" and greater on patterns with *****.

Heat sealed hem is strongly recommended on shade size equal, wider than 108" or longer than 90", to improve the appearance of the shade, minimizing waviness, twisting, cupping & curling, especially on shades with railroaded material.

**STRONGLY RECOMMEND** Heat Sealed Hem as the Bottomrail option for R1015, R1019, R1020 under 5% Sheerweave 5000 to improve appearance of the shade, and minimizing waviness.

Spring assist clutch system (2-1/2" tube only) aids in raising heavy shades by reducing the pull force by up to 40%. Highly recommend on large shades greater than 44.4 SQ.FT. with shade width greater than 60". Please note Spring Assist is not available with cassettes or 3" fascia.

### TouchLift Cordless Option Surcharge – $81

### Small Cassette Valance Option Surcharge (with fabric insert) – White, Vanilla, Bronze, and Black

| WIDTH TO: | 24" | 30" | 36" | 48" | 60" | 72" | 84" | 96" | 108" | 120" | 132" | 144" |
|---|---|---|---|---|---|---|---|---|---|---|---|---|
| | $54 | 60 | 67 | 78 | 89 | 101 | 112 | 125 | 140 | 155 | 166 | 175 |

### Medium Cassette Valance Option Surcharge (with fabric insert) – White, Vanilla, Silver, Bronze, and Black

| WIDTH TO: | 24" | 30" | 36" | 48" | 60" | 72" | 84" | 96" | 108" | 120" | 132" | 144" |
|---|---|---|---|---|---|---|---|---|---|---|---|---|
| | $59 | 67 | 76 | 91 | 103 | 114 | 121 | 134 | 146 | 159 | 172 | 185 |

### Large Cassette Valance Option Surcharge (with fabric insert) – White, Vanilla, Silver, Bronze, and Black

| WIDTH TO: | 24" | 30" | 36" | 48" | 60" | 72" | 84" | 96" | 108" | 120" | 132" | 144" |
|---|---|---|---|---|---|---|---|---|---|---|---|---|
| | $63 | 69 | 80 | 97 | 112 | 121 | 132 | 144 | 155 | 166 | 179 | 187 |

NOTE: Maximum overall width for 2-on-1 is 144" on all 3 cassette sizes.

### Fascia Option Surcharge – White, Vanilla, Silver, Bronze, Black

| WIDTH TO: | 24" | 30" | 36" | 48" | 60" | 72" | 84" | 96" | 108" | 120" | 132" | 144" |
|---|---|---|---|---|---|---|---|---|---|---|---|---|
| 3" Flat | $53 | 56 | 61 | 70 | 78 | 89 | 99 | 111 | 122 | 135 | 148 | 163 |
| 4" Flat | 57 | 61 | 67 | 74 | 87 | 101 | 114 | 126 | 139 | 151 | 164 | 179 |

**Deluxe Valance Surcharge** (standard height 3-5/8") Direction of fabric insert follows shade installed below. If valance is wider than material width, and shade below is not railroaded; valance will be made with a center seamed fabric insert. See deluxe valance section for more details.

| WIDTH TO: | 24" | 30" | 36" | 48" | 60" | 72" | 84" | 96" | 108" | 120" | 132" | 144" |
|---|---|---|---|---|---|---|---|---|---|---|---|---|
| Fabric Insert | $29 | 32 | 35 | 41 | 48 | 51 | 53 | 59 | 64 | 65 | 71 | 76 |

**Fabric Valance** (standard height 6") For valances wider than material width, material will be railroaded. Includes all Roller Shade materials. (Non-railroaded with center seam available upon request.) See fabric valance section for more details.

| WIDTH TO: | 24" | 30" | 36" | 48" | 60" | 72" | 84" | 96" | 108" | 120" | 132" | 144" |
|---|---|---|---|---|---|---|---|---|---|---|---|---|
| IB 4" & 6" | $83 | 89 | 98 | 109 | 121 | 141 | 161 | 185 | 205 | 225 | 245 | 265 |
| IB 8" & 12" | 91 | 101 | 109 | 143 | 162 | 177 | 201 | 226 | 248 | 274 | 297 | 323 |
| OB 4" & 6" | $113 | 124 | 134 | 151 | 170 | 185 | 210 | 233 | 257 | 286 | 312 | 340 |
| OB 8" & 12" | 126 | 137 | 151 | 172 | 195 | 215 | 243 | 272 | 301 | 337 | 369 | 403 |

**Tube Size Upgrade Surcharge** – applies only if upgraded to a larger tube. This option only available for shades without top treatment.

| TUBE SIZE: | 1-1/2" | 2" | 2-1/2" | 3-1/4" |
|---|---|---|---|---|
| | $33 | 62 | 97 | 108 |

**See page 18 for motorization surcharges**

## Group 5 – Clutch Roller with Beaded Chain

- 1% Sheerweave 2701 (126")*
- 1% Sheerweave 4901 (98")*
- 3% Sheerweave 4600 (126")*
- 4% S Screen (122")*
- Astaire (94")
- Brilliance (118")
- Claudio (110")
- Claudio Blackout (110")
- Darien (90")
- Drizzle (94")
- Sheerweave 7450R (118")
- Sheerweave 7650R (118")
- World Textures 1 (78")

| WIDTH TO: | 24" | 30" | 36" | 48" | 60" | 72" | 84" | 96" | 108" | 120" | 132" | 144" |
|---|---|---|---|---|---|---|---|---|---|---|---|---|
| HEIGHT TO: | | | | | | | | | | | | |
| 36" | $120 | 123 | 126 | 164 | 188 | 213 | 250 | 293 | 321 | 351 | 379 | 403 |
| 48" | 134 | 138 | 141 | 173 | 212 | 241 | 285 | 340 | 370 | 406 | 441 | 472 |
| 61" | 147 | 151 | 154 | 193 | 234 | 272 | 321 | 383 | 419 | 461 | 502 | 538 |
| 72" | 164 | 168 | 171 | 225 | 272 | 302 | 360 | 427 | 469 | 516 | 561 | 603 |
| 84" | 178 | 183 | 186 | 246 | 300 | 335 | 395 | 471 | 519 | 568 | 625 | 669 |
| 96" | 193 | 197 | 202 | 269 | 326 | 367 | 433 | 513 | 570 | 630 | 680 | 740 |
| 108" | 207 | 212 | 217 | 289 | 352 | 399 | 469 | 557 | 624 | 685 | 743 | 805 |
| 120" | 222 | 227 | 232 | 311 | 380 | 428 | 508 | 605 | 670 | 736 | 804 | 865 |
| 132" | 237 | 243 | 249 | 335 | 408 | 461 | 549 | 651 | 720 | 793 | 859 | 933 |
| 144" | 252 | 258 | 263 | 356 | 436 | 494 | 580 | 692 | 774 | 844 | 923 | 997 |

**2-on-1 Shades Option:** A Two-on-One shade is two shades under one continuous cassette valance. To price a 2-on-1, determine the price of each individual shade then add in the price of two individual cassette valances using the width of each shade. The total sum for the 2-on-1 shade is the sum of both shades and both cassettes. Clutch position only available on the outside of each shade (left shade - left side, right shade - right side).

NOTE: There is a 1/2" gap between the two shades. Please refer to the Product Size Specifications for individual shade sizes. Available with the Beaded Chain Clutch System & RemoteLift Motorization only.

***** Stainless steel bead chain is **REQUIRED** under skyline clutch when shade size is 108" x 90" and greater on patterns with *****.

Heat sealed hem is strongly recommended on shade size equal, wider than 108" or longer than 90", to improve the appearance of the shade, minimizing waviness, twisting, cupping & curling, especially on shades with railroaded material.

Spring assist clutch system (2-1/2" tube only) aids in raising heavy shades by reducing the pull force by up to 40%. Highly recommend on large shades greater than 44.4 SQ.FT. with shade width greater than 60". Please note Spring Assist is not available with cassettes or 3" fascia.

### TouchLift Cordless Option Surcharge – $81

**Small Cassette Valance Option Surcharge (with fabric insert)** – White, Vanilla, Bronze, and Black

| WIDTH TO: | 24" | 30" | 36" | 48" | 60" | 72" | 84" | 96" | 108" | 120" | 132" | 144" |
|---|---|---|---|---|---|---|---|---|---|---|---|---|
| | $54 | 60 | 67 | 78 | 89 | 101 | 112 | 125 | 140 | 155 | 166 | 175 |

**Medium Cassette Valance Option Surcharge (with fabric insert)** – White, Vanilla, Silver, Bronze, and Black

| WIDTH TO: | 24" | 30" | 36" | 48" | 60" | 72" | 84" | 96" | 108" | 120" | 132" | 144" |
|---|---|---|---|---|---|---|---|---|---|---|---|---|
| | $59 | 67 | 76 | 91 | 103 | 114 | 121 | 134 | 146 | 159 | 172 | 185 |

**Large Cassette Valance Option Surcharge (with fabric insert)** – White, Vanilla, Silver, Bronze, and Black

| WIDTH TO: | 24" | 30" | 36" | 48" | 60" | 72" | 84" | 96" | 108" | 120" | 132" | 144" |
|---|---|---|---|---|---|---|---|---|---|---|---|---|
| | $63 | 69 | 80 | 97 | 112 | 121 | 132 | 144 | 155 | 166 | 179 | 187 |

NOTE: Maximum overall width for 2-on-1 is 144" on all 3 cassette sizes.

**Fascia Option Surcharge** – White, Vanilla, Silver, Bronze, Black

| WIDTH TO: | 24" | 30" | 36" | 48" | 60" | 72" | 84" | 96" | 108" | 120" | 132" | 144" |
|---|---|---|---|---|---|---|---|---|---|---|---|---|
| 3" Flat | $53 | 56 | 61 | 70 | 78 | 89 | 99 | 111 | 122 | 135 | 148 | 163 |
| 4" Flat | 57 | 61 | 67 | 74 | 87 | 101 | 114 | 126 | 139 | 151 | 164 | 179 |

**Deluxe Valance Surcharge** (standard height 3-5/8") Direction of fabric insert follows shade installed below. If valance is wider than material width, and shade below is not railroaded; valance will be made with a center seamed fabric insert. See deluxe valance section for more details.

| WIDTH TO: | 24" | 30" | 36" | 48" | 60" | 72" | 84" | 96" | 108" | 120" | 132" | 144" |
|---|---|---|---|---|---|---|---|---|---|---|---|---|
| Fabric Insert | $29 | 32 | 35 | 41 | 48 | 51 | 53 | 59 | 64 | 65 | 71 | 76 |

**Fabric Valance** (standard height 6") For valances wider than material width, material will be railroaded. Includes all Roller Shade materials. (Non-railroaded with center seam available upon request.) See fabric valance section for more details.

| WIDTH TO: | 24" | 30" | 36" | 48" | 60" | 72" | 84" | 96" | 108" | 120" | 132" | 144" |
|---|---|---|---|---|---|---|---|---|---|---|---|---|
| IB 4" & 6" | $83 | 89 | 98 | 109 | 121 | 141 | 161 | 185 | 205 | 225 | 245 | 265 |
| IB 8" & 12" | 91 | 101 | 109 | 143 | 162 | 177 | 201 | 226 | 248 | 274 | 297 | 323 |
| OB 4" & 6" | $113 | 124 | 134 | 151 | 170 | 185 | 210 | 233 | 257 | 286 | 312 | 340 |
| OB 8" & 12" | 126 | 137 | 151 | 172 | 195 | 215 | 243 | 272 | 301 | 337 | 369 | 403 |

**Tube Size Upgrade Surcharge** – applies only if upgraded to a larger tube. This option only available for shades without top treatment.

| TUBE SIZE: | 1-1/2" | 2" | 2-1/2" | 3-1/4" |
|---|---|---|---|---|
| | $33 | 62 | 97 | 108 |

**See page 18 for motorization surcharges**

## Group 6 – Clutch Roller with Beaded Chain

- 1% Sheerweave 2500 (126")*
- Baroque (78")
- Brilliance Blackout (118")
- Fiona (78")
- Sheerweave 7400 (118")*
- Sheerweave 7600 (118")
- World Textures 1 Blackout (78")

| WIDTH TO: | 24" | 30" | 36" | 48" | 60" | 72" | 84" | 96" | 108" | 120" | 132" | 144" |
|---|---|---|---|---|---|---|---|---|---|---|---|---|
| HEIGHT TO: | | | | | | | | | | | | |
| 36" | $126 | 128 | 131 | 170 | 199 | 233 | 279 | 330 | 361 | 394 | 427 | 457 |
| 48" | 144 | 148 | 151 | 193 | 229 | 274 | 324 | 381 | 426 | 461 | 503 | 542 |
| 61" | 157 | 161 | 165 | 212 | 257 | 312 | 367 | 440 | 486 | 529 | 576 | 622 |
| 72" | 185 | 190 | 193 | 256 | 311 | 352 | 413 | 495 | 551 | 598 | 651 | 705 |
| 84" | 205 | 210 | 214 | 284 | 345 | 388 | 461 | 553 | 603 | 665 | 732 | 787 |
| 96" | 223 | 228 | 233 | 309 | 379 | 428 | 505 | 602 | 671 | 743 | 802 | 870 |
| 108" | 242 | 247 | 252 | 336 | 415 | 466 | 550 | 656 | 735 | 807 | 876 | 946 |
| 120" | 258 | 264 | 269 | 367 | 449 | 511 | 595 | 714 | 796 | 876 | 957 | 1029 |
| 132" | 277 | 283 | 289 | 392 | 480 | 545 | 641 | 770 | 847 | 943 | 1032 | 1122 |
| 144" | 293 | 300 | 306 | 421 | 509 | 585 | 690 | 823 | 921 | 1013 | 1108 | 1206 |

**2-on-1 Shades Option:** A Two-on-One shade is two shades under one continuous cassette valance. To price a 2-on-1, determine the price of each individual shade then add in the price of two individual cassette valances using the width of each shade. The total sum for the 2-on-1 shade is the sum of both shades and both cassettes. Clutch position only available on the outside of each shade (left shade - left side, right shade - right side).

NOTE: There is a 1/2" gap between the two shades. Please refer to the Product Size Specifications for individual shade sizes. Available with the Beaded Chain Clutch System & RemoteLift Motorization only.

***** Stainless steel bead chain is **REQUIRED** under skyline clutch when shade size is 108" x 90" and greater on patterns with *****.

Heat sealed hem is strongly recommended on shade size equal, wider than 108" or longer than 90", to improve the appearance of the shade, minimizing waviness, twisting, cupping & curling, especially on shades with railroaded material.

Spring assist clutch system (2-1/2" tube only) aids in raising heavy shades by reducing the pull force by up to 40%. Highly recommend on large shades greater than 44.4 SQ.FT. with shade width greater than 60". Please note Spring Assist is not available with cassettes or 3" fascia.

### TouchLift Cordless Option Surcharge – $81

### Small Cassette Valance Option Surcharge (with fabric insert) – White, Vanilla, Bronze, and Black

| WIDTH TO: | 24" | 30" | 36" | 48" | 60" | 72" | 84" | 96" | 108" | 120" | 132" | 144" |
|---|---|---|---|---|---|---|---|---|---|---|---|---|
| | $54 | 60 | 67 | 78 | 89 | 101 | 112 | 125 | 140 | 155 | 166 | 175 |

### Medium Cassette Valance Option Surcharge (with fabric insert) – White, Vanilla, Silver, Bronze, and Black

| WIDTH TO: | 24" | 30" | 36" | 48" | 60" | 72" | 84" | 96" | 108" | 120" | 132" | 144" |
|---|---|---|---|---|---|---|---|---|---|---|---|---|
| | $59 | 67 | 76 | 91 | 103 | 114 | 121 | 134 | 146 | 159 | 172 | 185 |

### Large Cassette Valance Option Surcharge (with fabric insert) – White, Vanilla, Silver, Bronze, and Black

| WIDTH TO: | 24" | 30" | 36" | 48" | 60" | 72" | 84" | 96" | 108" | 120" | 132" | 144" |
|---|---|---|---|---|---|---|---|---|---|---|---|---|
| | $63 | 69 | 80 | 97 | 112 | 121 | 132 | 144 | 155 | 166 | 179 | 187 |

NOTE: Maximum overall width for 2-on-1 is 144" on all 3 cassette sizes.

### Fascia Option Surcharge – White, Vanilla, Silver, Bronze, Black

| WIDTH TO: | 24" | 30" | 36" | 48" | 60" | 72" | 84" | 96" | 108" | 120" | 132" | 144" |
|---|---|---|---|---|---|---|---|---|---|---|---|---|
| 3" Flat | $53 | 56 | 61 | 70 | 78 | 89 | 99 | 111 | 122 | 135 | 148 | 163 |
| 4" Flat | 57 | 61 | 67 | 74 | 87 | 101 | 114 | 126 | 139 | 151 | 164 | 179 |

**Deluxe Valance Surcharge** (standard height 3-5/8") Direction of fabric insert follows shade installed below. If valance is wider than material width, and shade below is not railroaded; valance will be made with a center seamed fabric insert. See deluxe valance section for more details.

| WIDTH TO: | 24" | 30" | 36" | 48" | 60" | 72" | 84" | 96" | 108" | 120" | 132" | 144" |
|---|---|---|---|---|---|---|---|---|---|---|---|---|
| Fabric Insert | $29 | 32 | 35 | 41 | 48 | 51 | 53 | 59 | 64 | 65 | 71 | 76 |

**Fabric Valance** (standard height 6") For valances wider than material width, material will be railroaded. Includes all Roller Shade materials. (Non-railroaded with center seam available upon request.) See fabric valance section for more details.

| WIDTH TO: | 24" | 30" | 36" | 48" | 60" | 72" | 84" | 96" | 108" | 120" | 132" | 144" |
|---|---|---|---|---|---|---|---|---|---|---|---|---|
| IB 4" & 6" | $83 | 89 | 98 | 109 | 121 | 141 | 161 | 185 | 205 | 225 | 245 | 265 |
| IB 8" & 12" | 91 | 101 | 109 | 143 | 162 | 177 | 201 | 226 | 248 | 274 | 297 | 323 |
| OB 4" & 6" | $113 | 124 | 134 | 151 | 170 | 185 | 210 | 233 | 257 | 286 | 312 | 340 |
| OB 8" & 12" | 126 | 137 | 151 | 172 | 195 | 215 | 243 | 272 | 301 | 337 | 369 | 403 |

**Tube Size Upgrade Surcharge** – applies only if upgraded to a larger tube. This option only available for shades without top treatment.

| TUBE SIZE: | 1-1/2" | 2" | 2-1/2" | 3-1/4" |
|---|---|---|---|---|
| | $33 | 62 | 97 | 108 |

**See page 18 for motorization surcharges**

## Group 7 – Clutch Roller with Beaded Chain

- Alexandria (78")
- Cusco (110")
- Moravia (96")
- Sunscreen (SW) 7000 (118")*
- World Textures 2 (80")
- World Textures 2 Blackout (80")

| WIDTH TO: | 24" | 30" | 36" | 48" | 60" | 72" | 84" | 96" | 108" | 120" | 132" | 144" |
|---|---|---|---|---|---|---|---|---|---|---|---|---|
| HEIGHT TO: | | | | | | | | | | | | |
| 36" | $152 | 156 | 160 | 208 | 243 | 294 | 351 | 414 | 455 | 496 | 539 | 579 |
| 48" | 176 | 182 | 185 | 235 | 284 | 344 | 410 | 482 | 537 | 584 | 637 | 687 |
| 61" | 202 | 207 | 211 | 268 | 324 | 395 | 464 | 558 | 616 | 672 | 731 | 791 |
| 72" | 237 | 243 | 248 | 323 | 394 | 447 | 526 | 628 | 698 | 762 | 829 | 898 |
| 84" | 263 | 269 | 276 | 359 | 437 | 494 | 585 | 701 | 767 | 847 | 932 | 1005 |
| 96" | 286 | 294 | 301 | 392 | 481 | 545 | 644 | 765 | 854 | 946 | 1022 | 1109 |
| 108" | 310 | 318 | 325 | 427 | 527 | 594 | 700 | 836 | 937 | 1029 | 1117 | 1206 |
| 120" | 332 | 340 | 348 | 465 | 570 | 653 | 761 | 911 | 1014 | 1117 | 1223 | 1315 |
| 132" | 357 | 365 | 374 | 499 | 611 | 695 | 820 | 980 | 1082 | 1204 | 1319 | 1432 |
| 144" | 378 | 388 | 397 | 534 | 650 | 747 | 880 | 1051 | 1175 | 1294 | 1415 | 1542 |

**2-on-1 Shades Option:** A Two-on-One shade is two shades under one continuous cassette valance. To price a 2-on-1, determine the price of each individual shade then add in the price of two individual cassette valances using the width of each shade. The total sum for the 2-on-1 shade is the sum of both shades and both cassettes. Clutch position only available on the outside of each shade (left shade - left side, right shade - right side).

NOTE: There is a 1/2" gap between the two shades. Please refer to the Product Size Specifications for individual shade sizes. Available with the Beaded Chain Clutch System & RemoteLift Motorization only.

Heat sealed hem is strongly recommended on shade size equal, wider than 108" or longer than 90", to improve the appearance of the shade, minimizing waviness, twisting, cupping & curling, especially on shades with railroaded material.

* Stainless steel bead chain is **requlred** under skyline clutch when shade size is 108" x 90" and greater on patterns with *.

Spring assist clutch system (2-1/2" tube only) aids in raising heavy shades by reducing the pull force by up to 40%. Highly recommend on large shades greater than 44.4 SQ.FT. with shade width greater than 60". Please note Spring Assist is not available with cassettes or 3" fascia.

### TouchLift Cordless Option Surcharge – $81

**Small Cassette Valance Option Surcharge (with fabric insert)** – White, Vanilla, Bronze, and Black

| WIDTH TO: | 24" | 30" | 36" | 48" | 60" | 72" | 84" | 96" | 108" | 120" | 132" | 144" |
|---|---|---|---|---|---|---|---|---|---|---|---|---|
| | $54 | 60 | 67 | 78 | 89 | 101 | 112 | 125 | 140 | 155 | 166 | 175 |

**Medium Cassette Valance Option Surcharge (with fabric insert)** – White, Vanilla, Silver, Bronze, and Black

| WIDTH TO: | 24" | 30" | 36" | 48" | 60" | 72" | 84" | 96" | 108" | 120" | 132" | 144" |
|---|---|---|---|---|---|---|---|---|---|---|---|---|
| | $59 | 67 | 76 | 91 | 103 | 114 | 121 | 134 | 146 | 159 | 172 | 185 |

**Large Cassette Valance Option Surcharge (with fabric insert)** – White, Vanilla, Silver, Bronze, and Black

| WIDTH TO: | 24" | 30" | 36" | 48" | 60" | 72" | 84" | 96" | 108" | 120" | 132" | 144" |
|---|---|---|---|---|---|---|---|---|---|---|---|---|
| | $63 | 69 | 80 | 97 | 112 | 121 | 132 | 144 | 155 | 166 | 179 | 187 |

NOTE: Maximum overall width for 2-on-1 is 144" on all 3 cassette sizes.

**Fascia Option Surcharge** – White, Vanilla, Silver, Bronze, Black

| WIDTH TO: | 24" | 30" | 36" | 48" | 60" | 72" | 84" | 96" | 108" | 120" | 132" | 144" |
|---|---|---|---|---|---|---|---|---|---|---|---|---|
| 3" Flat | $53 | 56 | 61 | 70 | 78 | 89 | 99 | 111 | 122 | 135 | 148 | 163 |
| 4" Flat | 57 | 61 | 67 | 74 | 87 | 101 | 114 | 126 | 139 | 151 | 164 | 179 |

**Deluxe Valance Surcharge** (standard height 3-5/8") Direction of fabric insert follows shade installed below. If valance is wider than material width, and shade below is not railroaded; valance will be made with a center seamed fabric insert. See deluxe valance section for more details.

| WIDTH TO: | 24" | 30" | 36" | 48" | 60" | 72" | 84" | 96" | 108" | 120" | 132" | 144" |
|---|---|---|---|---|---|---|---|---|---|---|---|---|
| Fabric Insert | $29 | 32 | 35 | 41 | 48 | 51 | 53 | 59 | 64 | 65 | 71 | 76 |

**Fabric Valance** (standard height 6") For valances wider than material width, material will be railroaded. Includes all Roller Shade materials. (Non-railroaded with center seam available upon request.) See fabric valance section for more details.

| WIDTH TO: | 24" | 30" | 36" | 48" | 60" | 72" | 84" | 96" | 108" | 120" | 132" | 144" |
|---|---|---|---|---|---|---|---|---|---|---|---|---|
| IB 4" & 6" | $83 | 89 | 98 | 109 | 121 | 141 | 161 | 185 | 205 | 225 | 245 | 265 |
| IB 8" & 12" | 91 | 101 | 109 | 143 | 162 | 177 | 201 | 226 | 248 | 274 | 297 | 323 |
| OB 4" & 6" | $113 | 124 | 134 | 151 | 170 | 185 | 210 | 233 | 257 | 286 | 312 | 340 |
| OB 8" & 12" | 126 | 137 | 151 | 172 | 195 | 215 | 243 | 272 | 301 | 337 | 369 | 403 |

**Tube Size Upgrade Surcharge** – applies only if upgraded to a larger tube. This option only available for shades without top treatment.

| TUBE SIZE: | 1-1/2" | 2" | 2-1/2" | 3-1/4" |
|---|---|---|---|---|
| | $33 | 62 | 97 | 108 |

**See page 18 for motorization surcharges**

## Group 8 – Clutch Roller with Beaded Chain

- 4% Silver Screen (94")
- Flocke Blackout (94")*
- Jasper (110")
- Uptown (78")
- Uptown Room Darkening (78")

| WIDTH TO: | 24" | 30" | 36" | 48" | 60" | 72" | 84" | 96" | 108" | 120" | 132" | 144" |
|---|---|---|---|---|---|---|---|---|---|---|---|---|
| HEIGHT TO: | | | | | | | | | | | | |
| 36" | $200 | 204 | 209 | 277 | 326 | 394 | 469 | 555 | 609 | 663 | 718 | 771 |
| 48" | 229 | 235 | 241 | 314 | 378 | 459 | 546 | 643 | 716 | 777 | 846 | 913 |
| 61" | 261 | 268 | 274 | 358 | 432 | 526 | 617 | 742 | 820 | 893 | 971 | 1049 |
| 72" | 307 | 315 | 322 | 431 | 524 | 595 | 698 | 836 | 927 | 1009 | 1099 | 1189 |
| 84" | 339 | 348 | 356 | 478 | 583 | 654 | 775 | 931 | 1016 | 1122 | 1235 | 1329 |
| 96" | 371 | 380 | 389 | 520 | 639 | 723 | 853 | 1013 | 1131 | 1252 | 1352 | 1467 |
| 108" | 400 | 411 | 419 | 566 | 698 | 784 | 927 | 1106 | 1239 | 1362 | 1476 | 1594 |
| 120" | 427 | 437 | 448 | 618 | 756 | 863 | 1005 | 1205 | 1342 | 1476 | 1615 | 1736 |
| 132" | 459 | 470 | 482 | 662 | 809 | 919 | 1082 | 1297 | 1430 | 1591 | 1743 | 1891 |
| 144" | 487 | 500 | 511 | 710 | 859 | 986 | 1163 | 1390 | 1553 | 1708 | 1870 | 2036 |

**2-on-1 Shades Option:** A Two-on-One shade is two shades under one continuous cassette valance. To price a 2-on-1, determine the price of each individual shade then add in the price of two individual cassette valances using the width of each shade. The total sum for the 2-on-1 shade is the sum of both shades and both cassettes. Clutch position only available on the outside of each shade (left shade - left side, right shade - right side).

NOTE: There is a 1/2" gap between the two shades. Please refer to the Product Size Specifications for individual shade sizes. Available with the Beaded Chain Clutch System & RemoteLift Motorization only.

***** Stainless steel bead chain is **REQUIRED** under skyline clutch when shade size is 108" x 90" and greater on patterns with *****.

Heat sealed hem is strongly recommended on shade size equal to or greater than 108" x 90", to improve the appearance of the shade, minimizing waviness, twisting, cupping & curling, etc.

Spring assist clutch system (2-1/2" tube only) aids in raising heavy shades by reducing the pull force by up to 40%. Highly recommend on large shades greater than 44.4 SQ.FT. with shade width greater than 60". Please note Spring Assist is not available with cassettes or 3" fascia.

### TouchLift Cordless Option Surcharge – $81

### Small Cassette Valance Option Surcharge (with fabric insert) – White, Vanilla, Bronze, and Black

| WIDTH TO: | 24" | 30" | 36" | 48" | 60" | 72" | 84" | 96" | 108" | 120" | 132" | 144" |
|---|---|---|---|---|---|---|---|---|---|---|---|---|
| | $54 | 60 | 67 | 78 | 89 | 101 | 112 | 125 | 140 | 155 | 166 | 175 |

### Medium Cassette Valance Option Surcharge (with fabric insert) – White, Vanilla, Silver, Bronze, and Black

| WIDTH TO: | 24" | 30" | 36" | 48" | 60" | 72" | 84" | 96" | 108" | 120" | 132" | 144" |
|---|---|---|---|---|---|---|---|---|---|---|---|---|
| | $59 | 67 | 76 | 91 | 103 | 114 | 121 | 134 | 146 | 159 | 172 | 185 |

### Large Cassette Valance Option Surcharge (with fabric insert) – White, Vanilla, Silver, Bronze, and Black

| WIDTH TO: | 24" | 30" | 36" | 48" | 60" | 72" | 84" | 96" | 108" | 120" | 132" | 144" |
|---|---|---|---|---|---|---|---|---|---|---|---|---|
| | $63 | 69 | 80 | 97 | 112 | 121 | 132 | 144 | 155 | 166 | 179 | 187 |

NOTE: Maximum overall width for 2-on-1 is 144" on all 3 cassette sizes.

### Fascia Option Surcharge – White, Vanilla, Silver, Bronze, Black

| WIDTH TO: | 24" | 30" | 36" | 48" | 60" | 72" | 84" | 96" | 108" | 120" | 132" | 144" |
|---|---|---|---|---|---|---|---|---|---|---|---|---|
| 3" Flat | $53 | 56 | 61 | 70 | 78 | 89 | 99 | 111 | 122 | 135 | 148 | 163 |
| 4" Flat | 57 | 61 | 67 | 74 | 87 | 101 | 114 | 126 | 139 | 151 | 164 | 179 |

**Deluxe Valance Surcharge** (standard height 3-5/8") Direction of fabric insert follows shade installed below. If valance is wider than material width, and shade below is not railroaded; valance will be made with a center seamed fabric insert. See deluxe valance section for more details.

| WIDTH TO: | 24" | 30" | 36" | 48" | 60" | 72" | 84" | 96" | 108" | 120" | 132" | 144" |
|---|---|---|---|---|---|---|---|---|---|---|---|---|
| Fabric Insert | $29 | 32 | 35 | 41 | 48 | 51 | 53 | 59 | 64 | 65 | 71 | 76 |

**Fabric Valance** (standard height 6") For valances wider than material width, material will be railroaded. Includes all Roller Shade materials. (Non-railroaded with center seam available upon request.) See fabric valance section for more details.

| WIDTH TO: | 24" | 30" | 36" | 48" | 60" | 72" | 84" | 96" | 108" | 120" | 132" | 144" |
|---|---|---|---|---|---|---|---|---|---|---|---|---|
| IB 4" & 6" | $83 | 89 | 98 | 109 | 121 | 141 | 161 | 185 | 205 | 225 | 245 | 265 |
| IB 8" & 12" | 91 | 101 | 109 | 143 | 162 | 177 | 201 | 226 | 248 | 274 | 297 | 323 |
| OB 4" & 6" | $113 | 124 | 134 | 151 | 170 | 185 | 210 | 233 | 257 | 286 | 312 | 340 |
| OB 8" & 12" | 126 | 137 | 151 | 172 | 195 | 215 | 243 | 272 | 301 | 337 | 369 | 403 |

**Tube Size Upgrade Surcharge** – applies only if upgraded to a larger tube. This option only available for shades without top treatment.

| TUBE SIZE: | 1-1/2" | 2" | 2-1/2" | 3-1/4" |
|---|---|---|---|---|
| | $33 | 62 | 97 | 108 |

**See page 18 for motorization surcharges**

# LARGE DECORATIVE PATTERN FABRICS

- Fabric Repeat

**Fiona:**
Approximate Repeat Size: 8.4" x 8.4"

**Baroque:**
Approximate Repeat Size: 12.6" x 25.4"

**Alexandria:**
Approximate Repeat Size: 12.6" x 25.4"

- These patterns will not be matched on shades ordered together, or with side by side shades. Pattern will not be symmetrically centered on the shade. The way the material comes off the roll is the way the shade will be made.

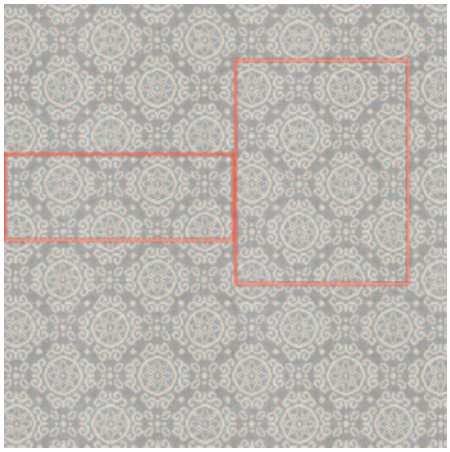

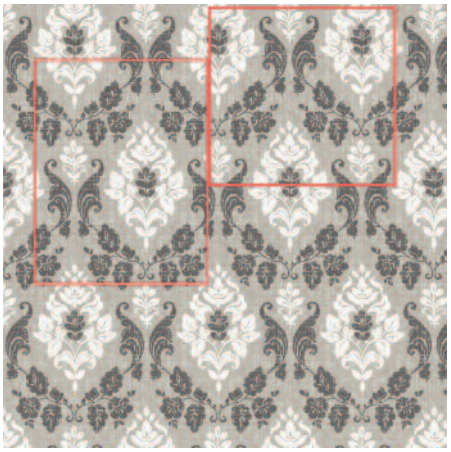

# TUBE SIZE UPGRADE

Tube upgrade to larger size is available for shades without top treatment to best match the overall appearance for side by side shades or varying shade size in one room. Based on the shade size and properties of the overall shade, tube size is determined and defaulted. Please note, upgrade can only be upgrade to larger tube size available under each operating system. Determine the tube size on the largest shade, base on that select the upgrade tube size for the rest of the side by side shade(s).

| | | Available Tube Sizes | | | | |
|---|---|---|---|---|---|---|
| **Operating System** | | **1-1/8"** | **1-1/2"** | **2"** | **2-1/2"** | **3-1/4"** |
| **Clutch Lift** | **Skyline** | X | X | X | X | - |
| | **R Series** | X | X | X | - | - |
| **TouchLift** | | - | X | - | - | - |
| **PowerWand, Simplicity & RemoteLift Motorization** | | - | X | - | - | - |
| **Hardwired Motorization** | **Sonesse 30 (ST30)** | - | X | - | - | - |
| | **Sonesse 50 (ST50)** | - | - | X | X | X |
| | **Sonesse 50 Ultra Quiet (ST50R)** | - | - | X | X | X |

## SIMPLICITY RECHARGEABLE AND POWERWAND OPTIONS: EXTRA CHARGE – SPECIFY ON ORDER

**USE APPROPRIATE CLUTCH ROLLER GRID FOR SHADE PRICE, THEN ADD EXTRA CHARGE(S) BELOW.**

- Simplicity Rechargeable Motor ..... **add $237 per motor**
  - – 5 Channel Remote Control (Black Part #CS5138 or White Part #CS5138W) ..... **add $36 each**
  - – Solar Panel (Part #CS52096 Solar Panel & mounting brackets) (Part #02-70-9021 Mounting bracket screws) ..... **add $131 each**
- PowerWand™ ..... **add $99 per shade**
  - – PowerWand™ Options (must be specified):
    1) Control Side (Left or Right)
    2) Wand Color (Black or White)
    3) Wand Length: 1 foot (12"), 2 feet (24"), 3 feet (36"), 4 feet (48"), 5 feet (60")
- Plug-in Charger (Can be used for both Simplicity Rechargeable and PowerWand) ..... Part #CS5199 ..... **add $27 each**

## REMOTELIFT OPTIONS: EXTRA CHARGE – SPECIFY ON ORDER (Must select RemoteLift power source* when ordering)

**USE APPROPRIATE CLUTCH ROLLER GRID FOR SHADE PRICE, THEN ADD REMOTELIFT EXTRA CHARGE(S) BELOW.**

- Radio Frequency (RF) RemoteLift Rollup 28 Wirefree (R28WF) Motorization Upgrade ..... **add $268 per shade**
- Radio Frequency (RF) RemoteLift Sonesse Ultra 30 Wirefree (ST30WF) Li-ion Motorization Upgrade ..... **add $291 per shade**

- Radio Frequency (RF) Remote Control – 1 Channel ..... Part #RC445069 ..... **add $84 each**
- Radio Frequency (RF) Remote Control – 5 Channel ..... Part #RC445079 ..... **add $108 each**
- Radio Frequency (RF) Remote Control – 16 Channel (available as a separate part order only) ..... Part #1811081 ..... **add $390 each**
- Radio Frequency (RF) Wireless Wall Switch – 1 Channel ..... Part #RC445135 ..... **add $212 each**
- Radio Frequency (RF) Wireless Wall Switch – 5 Channel ..... Part #RC445136 ..... **add $212 each**
- Radio Frequency (RF) Programmable Timer – 1 Channel ..... Part #1805237A ..... **add $341 each**
- RTS – Smoove 1 RTS ..... Part #1811533 ..... **add $111 each**
- RTS – myLink RTS interface ..... Part #1811403 ..... **add $319 each**

**Rollup 28 Wirefree (R28WF)***

- Radio Frequency (RF) Reloadable Single Battery Wand** ..... Part #KITRWR ..... **add $115 each**
- Radio Frequency (RF) Reloadable Dual Battery Wand** ..... Part #KITRDWR ..... **add $232 each**
- Dual Wand Y harness (required) ..... Part #9018625 ..... **add $9 each**
- Radio Frequency (RF) Transformer ..... Part #1822445 ..... **add $116 each**
- Radio Frequency (RF) Battery Wand Extension Wire – 10" ..... Part #9018623 ..... **add $9 each**
- Radio Frequency (RF) Battery Wand Extension Wire – 48" ..... Part #9016736 ..... **add $12 each**
- Radio Frequency (RF) Battery Wand Extension Wire – 96" ..... Part #9018624 ..... **add $17 each**
- Radio Frequency (RF) Lithium Batteries (Reloadable Wand – 8 each) ..... Part #9014834 ..... **add $38 each**

- Solar Recharge Kit ..... Part #9019034 ..... **add $209 each**
  (**batteries are included if option is selected under a shade, not included if ordered as a kit alone.**)
  (Includes solar panel, 10" Y harness, 12v reloadable battery tube, tube mounting clips, glass mount adhesive tape, solar panel mounting brackets – 4 qty.)
- NiMh Rechargeable Batteries (quantity of 10) ..... Part #9018621 ..... **add $59 each**
- Plug-in AC Battery Rapid Charger (for solar recharge kit only) (includes 12" cable) ..... Part #9018620 ..... **add $205 each**
- 48" Extension Cable for Y Harness ..... Part #9016736 ..... **add $14 each**

**Sonesse Ultra 30 Wirefree (ST30WF) RTS Li-ion**

- Plug-in Charger ..... Part #9025166 ..... **add $33 each**
- 94.5" Extension Cable ..... Part #9021016 ..... **add $11 each**
- 7.87" Extension Cable ..... Part #9021131 ..... **add $8 each**

## HARDWIRED MOTORIZATION

**Hardwired Motorization is available with a variety of lifting capacities, “quietness", power options and control options.** Please see separate Hardwired Motorization Price List & Product Info Guide for complete details.

## MOTOR READY

**Dealer’s Own Motorization**
The factory will provide roller shade materials ready for Dealer or Automation Companies to motorize. These shades styles are also known to some as Motor Ready.

These shade materials are produced as follows:

**Motor Ready Shades.** Motor Ready shades are **PRICED** and **MANUFACTURED** to the “**net width**" specified by dealer. (Dealer is required to make all necessary width deductions to allow for motor and brackets being used, and order under **Mount Type: Exact End to End Mount.**)

- Factory automatically adds extra material length required for tube wrap at no additional charge.
- Dealer specifies tube size. (1-1/2" extruded ribbed, and 2" smooth at no additional charge. 2-1/2" extruded ribbed and 3-1/4" extruded ribbed tubes are available with applicable surcharge. (Contact customer service for surcharge information.)
- Motor Ready shades do not include notch on the tube, clutch, idler end, crown/drive, and brackets.
- Motor Ready comes with only tube, fabric and bottom rail with end caps.

**Clutch Lift Continuous Control**
Features continuous bead chain. When chain is pulled, the clutch rotates the roller tube lifting and lowering the shade. Chain bead stops set at upper and lower shade limits.

**Defaulted Beaded Loop Length**

| SHADE HEIGHT | LOOP DROP |
|---|---|
| 12" to 15 7/8" | 2/3 of shade height |
| 16" to 29 7/8" | 3/4 of shade height |
| 30" - 35 7/8" | 24" loop |
| 36" - 41 7/8" | 30" loop |
| 42" - 47 7/8" | 36" loop |
| 48" - 53 7/8" | 42" loop |
| 54" - 59 7/8" | 48" loop |
| 60" - 65 7/8" | 54" loop |
| 66" - 71 7/8" | 60" loop |
| 72" - 77 7/8" | 66" loop |
| 78" - 89 7/8" | 72" loop |
| 90" - 101 7/8" | 84" loop |
| 102" - 113 7/8" | 96" loop |
| 114 - above | 3/4 of shade height |

**Note:** Custom beaded loop lengths may be ordered, but they must be LONGER than the standard loop size for a given shade height (as indicated above). Loop lengths cannot be made shorter than the standard size because the shade will not fully operate through the entire range.

Plastic bead chains are available in the following colors:
• Black • Bronze • Vanilla • White

Metal bead chain available at no additional charge in the following colors/finishes:
• Antique Brass • Oil Rubbed Bronze • Stainless Steel
• Nickel • White • Black

NOTE: We strongly recommend that all shades over 108" x 90" be ordered with a metal or stainless steel chain.

Stainless steel chain is REQUIRED on some heavy materials with shade size equal or greater than 108" x 90" under skyline clutch, please refer to price pages for detail.

**TouchLift Cordless**
- Shade lowers manually by hand
- Shade slowly raises automatically with slight pull on the bottom hem
- Shade comes pre-assembled on a mounting bar/rail. The rail and mounting brackets are available in white or black.
- Minimum shade width – 18"
- Minimum shade height – 24"
- Maximum shade size – **see Product Size Specifications – TouchLift** section for detail.

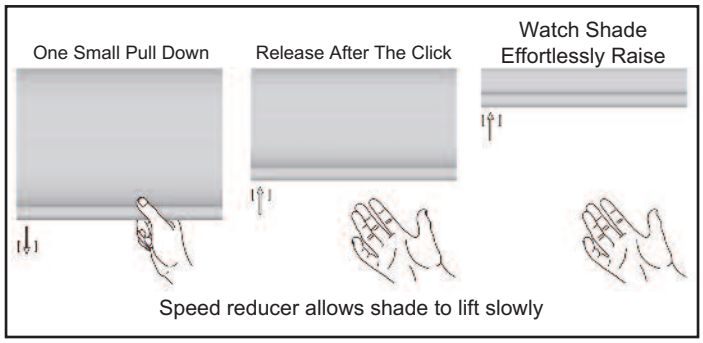


**Inside/Ceiling Mount** **Outside Mount**

NOTE: TouchLift Handle only available with Fabric Wrapped Rail

### PowerWand™ Motorization

- PowerWand™ Rechargeable option is an easy, cord free motorized operation for the budget savvy homeowner.

### PowerWand™ Rechargeable Shades Operation

- Press the up or down button on the pendant to raise or lower the shading to your desired position. No programming is required with PowerWand™ as upper and lower limits are set at the factory. If desired, upper and lower limits can be adjusted in the field.
- Please refer to the installation instructions for instructions on resetting the upper and lower limits and setting a favorites position can be programmed on-site.

### PowerWand™ Appearance

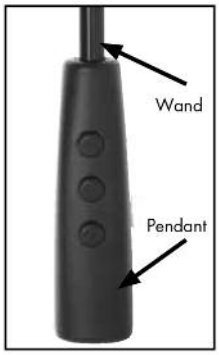


- The PowerWand™ Rechargeable wand and pendant is attached to the head rail and requires no additional mounting.
- The wand and pendant hangs down the front of the shades from the head rail.
- Pendant is 2-1/2” long.
- The pendant does not need to be mounted to the wall to operate the shade.

### PowerWand™ Options

- Wand is available in Black or White (there is no default)
- Wand is available in 1 foot increments from 1 to 5 feet (there is no default)
- Wand is available on either the right or left side of the shade (there is no default)

White

Black Shown with Plug-In Charger

### PowerWand™ Battery Life

- The battery life will vary based on the type of window covering selected, the size and weight of the window covering and the number of times you operate the blind on a daily basis.

### Battery Charger

- 8.4 Volt charger requires a standard power outlet to recharge the battery. The charger must be specified when ordering the PowerWand motorization option. The charger plugs into the charger port on the side of the pendant. The charger is black and comes with a 156” wire. The dimensions are 1” wide x 2-1/2” length x 1-3⁄4” deep.

### Simplicity Rechargeable

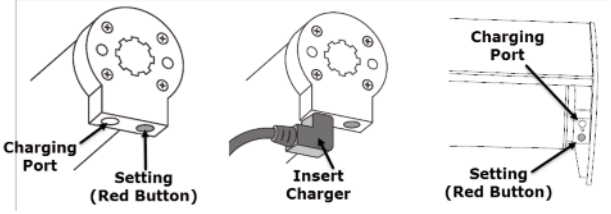


- The Rechargeable Simplicity motor program features an integrated rechargeable lithium ion battery in the motor casing and is fully concealed by the inner tube.
- Rechargeable battery is included with the motor. The average battery charge will last 6-12 months based on an average sized shade raised and lowered once per day. The life of the battery charge will vary based on the type of window covering selected, the size and weight of the window covering and the number of times the shade is operated on a daily basis. The battery can be recharged up to 500 times. It takes approximately 5 hours to recharge the motor when fully depleted.

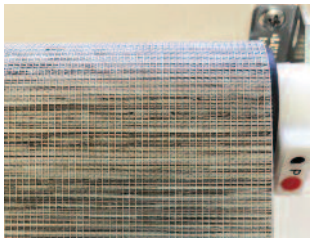

### Battery Charger

- An 8.4 Volt charger requires a standard power outlet to recharge the battery. The charger must be specified when ordering Simplicity Rechargeable Motorized shade option. The charger plugs into the charging port of the motor. The charger is black and comes with a 156” wire. The dimensions are 1” wide x 2-1/2” length x 1-3/4" deep. Sold separately.

### Solar Panel Recharge Option

- Plugs in to any Simplicity Rechargeable motorized shading (does not work with PowerWand). Provides constant trickle charge to 7.4v Li-ION Rechargeable battery packs. Does not require direct sunlight, but performs best in regular direct sunlight applications. Will prolong the life of the charge of the 7.4v rechargeable battery packs, and in some applications will maintain charge indefinitely.
- Life of charge is subject to application variables such as, size and weight of shade, frequency of use, amount of direct sunlight exposure, etc.

### 5 Channel Remote

- The remote can operate up to five shadings simultaneously, individually or in groups. Remotes and holders are available in white or black. The remote comes with a holder which can be mounted to a wall for easy storage. The range of the remote is approximately 80 feet.

White
(Part #CS5138W)

Black
(Part #CS5138)

Please Note:

- Not all motors run at the same rate of speed.
- Simplicity motors have a “Favorites” position setting. To set a “Favorites” position, follow instructions provided in the installation instructions.

# REMOTELIFT™ MOTORIZATION: OVERVIEW

With RemoteLift™ motorized shades, enjoy a better quality of life and have more time to enjoy life's daily pleasures. At the touch of a button, window coverings can be instantly adjusted to changing activities or the varying sun conditions.

An ideal solution is to manage glare with a RemoteLift hand-held remote control. At the simple touch of a button, shades will open or close to adjust to the changing sunlight in a room.

RemoteLift Radio Frequency (RF) motorized shades provide ultra-quiet operation. The system can operate shades from virtually anywhere in the house without direct line of sight. Similar to how a garage door opener operates, radio signals travel through walls and make it possible to control multiple coverings throughout the home alone or as a group. The RF system is also available in a 5 or 16 channel version. The multi-channel RF system allows for independent control of individual shades and/or group control.

RemoteLift motorization systems provide many benefits, such as improving energy efficiency, providing easily controllable privacy and also enhancing home security.

The RemoteLift RF timer allows users to program specific times of the day to automatically adjust shades in different areas of the house, protecting interiors from the fading effects of direct sunlight. This feature provides added security to an unoccupied home by creating a lived in look even while homeowners are away on vacation.

The battery powered RemoteLift RF wireless wall switch allows shades to be controlled when entering or exiting a room, just like the lights. The switch may be seamlessly installed without wiring next to any light switch or stand alone, and is never misplaced. This one touch privacy helps create the ideal environment whether preparing for a bath, relaxing in bed or enjoying time with the family at home.

The Smoove® 1 RTS surface-mounted wall switch avoids cutting into drywall. This single channel, battery-operated solution is easy to install, and doesn't require an electrician. It's an intuitive, surface mount control.

The myLink™ RTS Smartphone and Tablet Interface is a WiFi to Radio Technology Somfy® (RTS) bridge that can control up to 5 channels of RTS motorized products using the Somfy myLink apps for iOS and Android devices. Through the app, users can send immediate RTS commands, create scenes (a group of motorized products working together) and schedules (timed events). Users may access their myLinks from anywhere with the app's remote access feature. Though the myLink is a single-zone controller, multiple myLinks can be joined within the same system for multi-zone control.

RemoteLift motorized shades are powered by Somfy, an industry leader in automated window coverings. All motorized products are backed by a 5 year warranty.

# REMOTELIFT™ MOTORIZATION: FEATURES & OPTIONS

**REMOTELIFT™ MOTORIZATION FEATURES:**

- Advanced motor
- Quiet operation
- Motor is fully enclosed within the headrail
- Installs with standard installation hardware
- RF motor is programmable

Note: The power source must be selected when ordering. Available under Skyline, not R series

## Rollup 28 Wirefree (R28WF)

Note: The power source must be selected when ordering. The options are: reloadable single or dual battery wand, and the plug-in transformer.

| | |
|---|---|
| **Radio Frequency (RF) RemoteLift Motor**<br>Motor (Part #1240292)<br>Crown (Part #9018475)<br>Drive (Part #9018477) | • Fully concealed motor unit<br>• Flexible and programmable operation<br>• 12 Volt System<br>• Capable of lifting shades up to 8 LBS |
| **Single Battery Wand (reloadable) and Installation Clips**<br>Wand (Part #RC445268)<br>Clips (Part #9013263)<br>8 AA Lithium Batteries (not shown) (Part #9014834)<br>Note: Battery wand length with the tip of the cord is 17 3/4". Length of the cord is 6". | • On initial shade orders, the reloadable wand comes with 8 AA lithium batteries<br>• Comes with mounting installation clips<br>• For parts ordering the reloadable wand INCLUDING 8 AA lithium batteries, order both part #s<br>• Replacement 8 AA lithium batteries may also be ordered separately |
| **Optional, Dual Battery Wand (reloadable) and Installation Clips**<br>(Kit: Part #KITRDW)<br>(Clips: Part #9013263)<br>(Y-Harness: Part #9018625)<br>(Y-Harness Ext. Cable: Part #9016736) | • On initial shade orders, the reloadable wands come with 16 AA lithium batteries<br>• Combines (reloadable) Single Battery Wands for added lifting capacity and/or extended life<br>• Comes with mounting installation clips |
| **Transformer 10' Cable**<br>(Part #1822445) | • Plug-in operation, no batteries required<br>• Works in standard wall outlet (10' wire length) |
| **Battery Wand Extension Cables**<br>Color: White<br>(10" Cable: Part #9018623)<br>(48" Cable: Part #9016736)<br>(96" Cable: Part #9018624) | • Available in 10", 48" and 96"<br>• Allows battery wand installation away from headrail |
| **WireFree™ Solar Pack Kit** – Batteries NOT included (Part #9019034)<br>Photovoltaic Panel<br>"Y" Harness<br>Battery + Battery Tube (Part #9018621)<br>**Accessories**<br>Plug-in AC battery (Part #9018620) rapid charger (required for charging battery prior to installation) | • Uses sunlight to power a motorized shade.<br>• Easy to install. Low profile, easy to conceal.<br>• Solar Recharge Kit (**batteries NOT included if ordered as stand alone kit**) (Part #9019034) – Includes solar panel, 10" Y harness, 12v reloadable battery tube, tube mounting clips, glass mount adhesive tape, solar panel mounting brackets – 4 qty.)<br>• NiMh Rechargeable Batteries (quantity of 10) (Part #9018621)<br>• Plug-in AC Battery Rapid Charger (for solar recharge kit only) (includes 12" cable) (Part #9015781)<br>• 48" Extension Cable for Y Harness (Part #9016736) |

## Sonesse Ultra 30 Wirefree RTS Li-ion (ST30WF)

Note: Charger is required to charge the shade.

| | |
|---|---|
| Motor (Part #:1003310SMFY)<br>Crown & Drive (Part #: 9020674) | • Li-ion Battery, no external batteries, no electrical wires nor cords.<br>• Ultra Quiet 37dBA (designed for silence)<br>• Soft Start and Soft Stop<br>• Battery power indicator<br>• Adjustable Speed (10 to 28rpm)<br>• 2 Nm, 12V 2600mAh, 433.42 MHz<br>• 5 year warranty (2-year limited warranty on battery) |
| 13Vdc -purchased separately<br>Plug- in Charger (Part #9025166) | • Easy recharging<br>• Charging time <4, 5 hours |
| Extension Cable for charging<br>(94.5" Cable: Part #9021016)<br>(7.87" Cable: Part #9021131) | • Available in 7.84" and 94.5" |

## Somfy RTS Compatible Accessories

| | |
|---|---|
| **Radio Frequency (RF) Remote Control** (must order separately)<br>Color: 2 tone white and gray<br>2 Types: programmable 1-channel and programmable 5-channel<br>(1-Channel: Part #RC445069)<br>(5-Channel: Part #RC445079)<br>(16-Channel: Part #1811081 – available as a separate part order only) | • Controls shade operation<br>• Programmable features<br>• Easy shade positioning up to 90 feet away<br>• 5-channel remote allows for multiple and independent shade operation 5-channel remote programming can be done by special request prior to shipping. Contact customer service with your programming instructions otherwise all shades will be programmed on channel 1. |
| **Wireless Wall Switch**<br>Color: white<br>2 Types: programmable 1-channel and 5-channel<br>(1 Channel: Part #RC445135)<br>(5 Channel: Part #RC445136) | • Control wireless operation from the wall up to 90 feet away<br>• Works like turning a light on/off |
| **Programmable Timer**<br>1 Type: programmable 1-channel<br>(Part #1805237A) | • Program operation based on pre-set times<br>• Excellent home security feature |
| **Smoove 1 RTS** – single channel surface mount control<br>Color: Pure<br>(Part #1811533) | • Battery operated<br>• Tactile buttons for UP/DOWN/MY/STOP control<br>• LED for visual feedback |
| **myLink Interface**<br>Color: White<br>(Part #1811403) | • Smartphone and Tablet Interface 120V AC<br>• App Control<br>• Remote Access<br>• Compatible and controls all Radio Technology Somfy RTS products.<br>• Can control up to 5 channels of RTS motorized products using myLink apps for iOS and android devices. |

# CASSETTES

**Large Cassette Valance**
- Available with Clutch Control, TouchLift Cordless and Motorization
- Features a shade fabric insert. Insert fabric will run the same direction as the shade fabric.
- Dimensions – 3-7/8" high x 3-7/8" deep
- Colors – White, Vanilla, Silver, Bronze, Black

**Medium Cassette Valance**
- Available with Clutch Control, TouchLift Cordless, and Motorization
- Features a shade fabric insert. Insert fabric will run the same direction as the shade fabric.
- Dimensions – 3-1/8" high x 3-3/4" deep
- Colors – White, Vanilla, Silver, Bronze, Black

**Small Cassette Valance**
- Available with Clutch Control
- Features a shade fabric insert. Insert fabric will run the same direction as the shade fabric.
- Dimensions – 2-1/2" high x 2-1/2" deep
- Colors – White, Vanilla, Bronze, Black

# FASCIAS

**3" and 4" Fascia**
- Available with Clutch Control and Motorization
- Flat Style Only
- RemoteLift battery wands must be externally mounted to window sill or wall
- Colors – White, Vanilla, Silver, Bronze, Black

Dimensions –
<u>Skyline</u>
3" – 3-3/8" high x 3-1/8" deep
4" – 3-7/8" high x 4-1/8" deep

<u>R-Series</u>
3" – 3" high x 3-1/16" deep
4" – 4" high x 4-1/16" deep

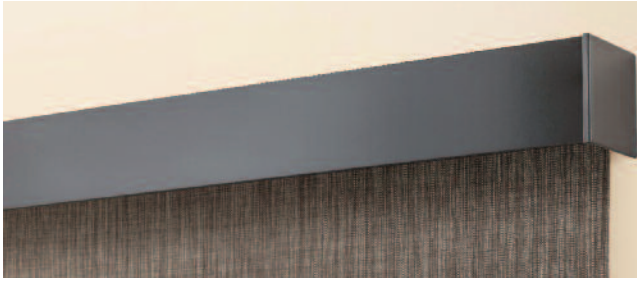

Flat Style (3" and 4") painted finish

3" Fascia

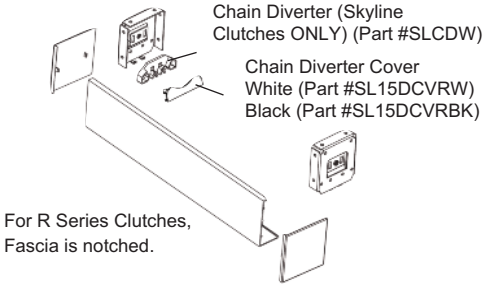


4" Fascia

Fascia clip is required under Skyline.

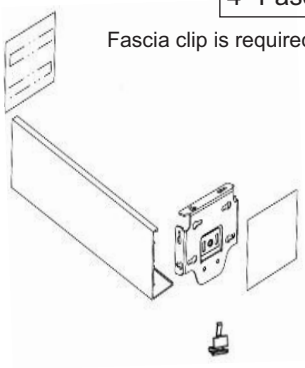

# DELUXE VALANCE

Optional Deluxe Valance has clear edge groovers to hold the coordinating fabric in place.

- For inside mount no returns, the factory deducts 1/8"
- For inside mount with returns, the factory adds 1-1/4"
- For outside mount no returns, the factory adds 1"
- For outside mount with returns, the factory adds 2-3/8"

**Outside Mount:**
Returns length only available in 3-1/2"

**Inside Mount:**
Default No returns

Custom size returns available:
Minimum return length 2-1/4"
Maximum return length 3-1/2"

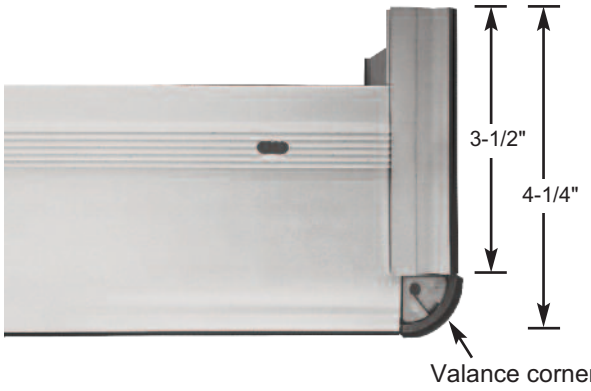


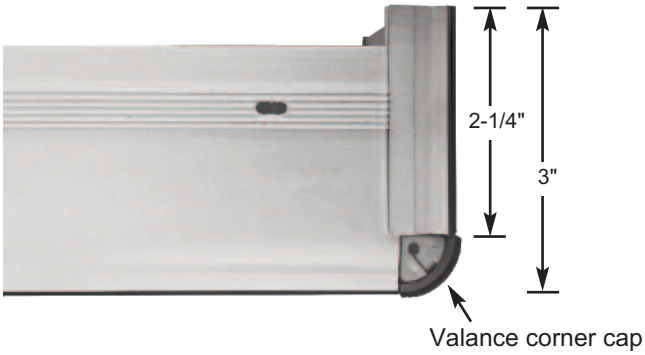


**Note:** When ordering returns, valance corner cap adds 3/4" to the valance return depth.

**Deluxe Valance** Insert fabric will run the same direction as the shade fabric. If valance is wider than material width, and shade fabric is not railroaded; insert fabric will have a center seam.

| WIDTH TO: | 24" | 30" | 36" | 48" | 60" | 72" | 84" | 96" | 108" | 120" | 132" | 144" |
|---|---|---|---|---|---|---|---|---|---|---|---|---|
| Fabric Insert | $29 | 32 | 35 | 41 | 48 | 51 | 53 | 59 | 64 | 65 | 71 | 76 |

**FINISHED DIMENSIONS**

| | |
|---|---|
| Valance Drop Size | 3-5/8" |
| Valance Return Size (Outside Mount) | 3-1/2" |

| **Spec:** | |
|---|---|
| Minimum Width | 12" |
| Maximum Width | 144" |

| **Inside (IB/IS) Mount** | |
|---|---|
| Valance with no returns | Ordered width - 1/8” |
| Valance with returns | Ordered width + 1-1/4” |
| **Outside (OB/OS)** | |
| Valance with no returns | Ordered width + 1" |
| Valance with returns | Ordered width + 2 3/8" |
| **End to End (Net Size) Mount** | |
| Valance with no returns | Ordered width |
| Valance with returns | Ordered width |

# FABRIC VALANCE

- Please refer to **Collection Information** section for detail.
- Minimum Width – 12"
- Standard Valance Height – 6"
- Optional Valance Height – 4", 8" & 12"
- One standard return size for Outside Mount – 3 3/4"
- No returns under Inside Mount
- Not all patterns are available. Refer to **Collection Information** section for availability.

Inside Mount

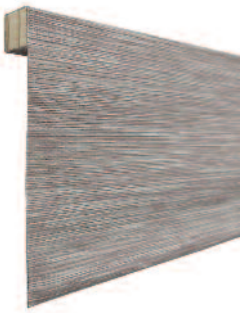

- 3/4" Dust Cap Depth. Mounting depth requirement: 3/4" plus inside mount shade clearance.

Outside Mount with returns

Same specifications as noted to the left

- Outside mount Dust Cap Depth – 3 3/4"
- Outside Mount Fabric Valance (without shades) – finished size measures 1 1/2" wider than ordered width.

**Fabric Valance** – For valances wider than material width, material will be railroaded. Includes all Roller Shade materials. (Non-railroaded with center seam available upon request.)

| WIDTH TO: | 24" | 30" | 36" | 48" | 60" | 72" | 84" | 96" | 108" | 120" | 132" | 144" |
|---|---|---|---|---|---|---|---|---|---|---|---|---|
| IB 4" & 6" | $83 | 89 | 98 | 109 | 121 | 141 | 161 | 185 | 205 | 225 | 245 | 265 |
| IB 8" & 12" | 91 | 101 | 109 | 143 | 162 | 177 | 201 | 226 | 248 | 274 | 297 | 323 |
| OB 4" & 6" | $113 | 124 | 134 | 151 | 170 | 185 | 210 | 233 | 257 | 286 | 312 | 340 |
| OB 8" & 12" | 126 | 137 | 151 | 172 | 195 | 215 | 243 | 272 | 301 | 337 | 369 | 403 |

# DUAL MOUNT SHADE

Brackets
(Part #SLB660DBVW – white)
(Part #SLB660DBVBK – black)

**Vertical Mount**

- Recommended Inside Mount Only
- Approx. 3" minimum mounting depth for flush mount
- 2" minimum mounting depth for Ceiling Mount
- 5-3/4" Bracket height
- Roll Configuration: Reverse (top) / regular (bottom)
  – When combining a Sheer material and a Room Darkening/Blackout, we recommend the Room Darkening/ Blackout as the regular roll on the bottom closest to the window for better light control.
- Available with Clutch Lift, RF R28 RemoteLift, ST-30 Motorized
- Available as side-by-side (butting shades) with pin-end to clutch end
- Fabric Valances are available and create a beautifully finished treatment – see Fabric Valance section for detail
- Cassette, Fascia, Pocket, and Deluxe Valance are not available
- **Maximum size 84" x 96"**

# POCKET HEADRAIL, SIDE AND BOTTOM CHANNELS

### Pocket Headrail

The aluminum pocket headrail (4-1/8" high x 4-1/2" deep) with closure and end plates conceals and protects the shade mechanism. Available in white and anodized aluminum finishes.

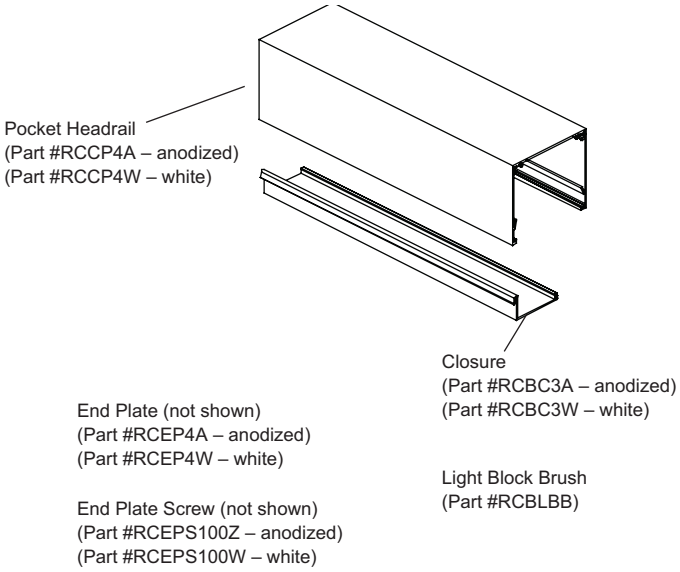

| FINISHED DIMENSIONS | |
|---|---|
| Inside Mount | Ordered Width – 1/8" |
| Outside Mount | Ordered Width + 1/4" |
| Exact End to End Mount | Ordered Width |

### Side and Bottom Channels

Aluminum side and bottom channels prevent light leaks around the edges and bottom of shades. Ideal for room-darkening. Available in white and anodized aluminum finishes. (Side channels feature light-blocking wool pile)

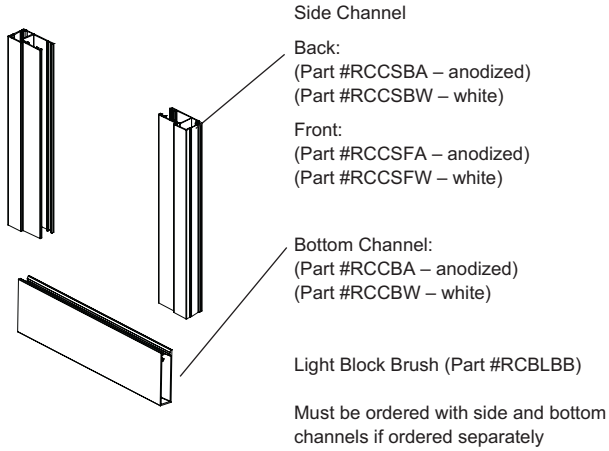

| CHANNELS – FLAT SURCHARGES |
|---|
| • Side Channels .....**add $110** |
| • Bottom Channel.....**add $78** |

Note: Side Channels are available with the Pocket Headrail, 4" Fascia, and **R-Series Clutches** only.

Fabric deduction with side channels is 2-3/4" for the headrail cut width.

### Pocket Headrail Option Surcharge

| WIDTH TO: | 24" | 30" | 36" | 48" | 60" | 72" | 84" | 96" | 108" | 120" | 132" | 144" |
|---|---|---|---|---|---|---|---|---|---|---|---|---|
| | $71 | 100 | 117 | 144 | 172 | 201 | 226 | 256 | 284 | 312 | 340 | 368 |

# DECORATIVE PULL TASSELS

**Overview**
- Optional for TouchLift Cordless shades only.
- Available on fabric-wrapped and Deluxe bottomrails only.
- Available in three styles and multiple color choices.

| Style | Color | Color Number |
|---|---|---|
| Barrel | Birch | 253 |
| | Black | 267 |
| | Bone/Ivory | 265 |
| | Carob | 260 |
| | English Pine | 254 |
| | Snowberry | 251 |
| | Walnut | 266 |

NOTE: Pull tassel hanging cord are approximate 6" in length measuring from edge of the bottom bar to the lower edge of the tassel.

**Barrel Pull Tassel - specify color** .....**add $4**

# SPRING ASSIST

**Spring Assist <u>Skyline Clutch</u> Control**

- Highly recommended for shades between 80" x 80" and 144" x 144"
- Minimum shade size – 44.4 SQ. FT. with shade width greater than 60"
- Geared spring assist clutch system aids in raising heavy shades by reducing the pull force by up to 40%.
- Spring assist is only available with 2 1/2" tube.

| SPRING ASSIST UPGRADE SURCHARGE |
|---|
| • Spring Assist Clutch – price shades off Clutch Roller price grid then add surcharge .....**add $105**<br>Note: Spring Assist NOT AVAILABLE with cassettes or 3" Fascia |

# RAILROADING/MATERIAL SPLICING/SEAM PLACEMENT

**Railroaded Material**
The fabric is turned on its side, using width for length, to increase the maximum width available. Some fabrics cannot be railroaded due to pattern or construction.

For multiple shade orders, if one shade on the order is railroaded the factory will automatically railroad all other shades. This is done to ensure the pattern direction will be the same on all shades.

**Splicing (Seam Placement)**
Custom Splicing (Seam Placement) is available with up to 2 seams per shade at a **15% surcharge**. Splice locations are figured from the bottom hem/rail of the shade up. A 1/4" tolerance per seam in either direction is considered acceptable. This is due to the difficulty in handling the material while setting the seam.

The maximum height for custom seams is equal to the material roll width less 3". Example – 98" wide material railroaded and seamed has a maximum seam placement of 95".

Seams may be visible when the shade is fully extended. Seams will be placed as close to the tube as possible, location may varied depending upon roll width and shade height.

Although we maintain the highest quality standards, we cannot guarantee an exact pattern match at the seam on individual shades. We do not guarantee pattern matches shade to shade horizontally or vertically on multiple shade orders.

# BOTTOMRAIL OPTIONS

**Bottomrail/Hems**
Each roller shade fabric comes standard with the fabric-wrapped rail. Alternative bottomrail styles and colors may be selected at no extra charge. Those selections must be noted on your order.

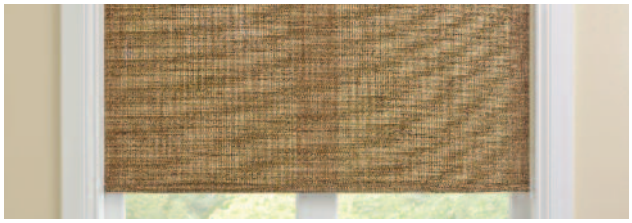

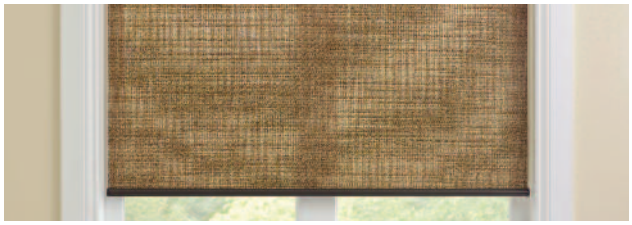

*Heat sealed hem bar is highly recommended when shade is ordered with railroaded material or when shade is equal, wider than 108"or longer than 90".*

**Fabric Wrapped Rail (1")**
Front face of rail is wrapped with shade fabric. The back face of the rail is a visible painted finish.
Colors – White, Black

Front face of rail wrapped with shade fabric; back face of rail is a visible painted finish without any fabric wrap. Includes frosted end caps.

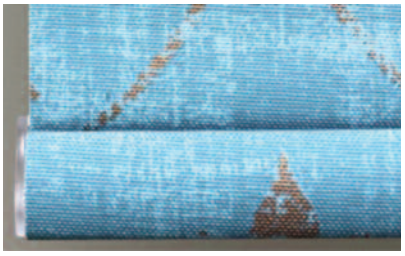

**Fabric wrapped bottomrail comes with clear handle(s) when ordered as TouchLift Shade. Shades greater than 42" will have 2 handles.

**Deluxe Rail (1")**
Painted metal rail with color-matched end caps.
Colors – White, Vanilla, Silver, Bronze, and Black

Includes color-matched end caps

**Heat Sealed Aluminum Bar (1-1/4")**
Aluminum bar heat sealed into a hem pocket. Pocket edges are also sealed. Heat Seal Hem bar is highly recommended on bigger dimension and when shade is request to be made with railroaded material or heavier material to improve appearance of the shades; will help reduce waviness, twisting, cupping & curling.

Not available on all styles. Please refer to the **Collection Information** section.

Heat sealed hem to back pocket edges come sealed

**Flat Deco Rail (1-1/4")** – effective 5/20/2019
Flat aluminum rail for simple clean look. Fabric wrapped not available.

Colors – White, Vanilla, Silver, Bronze, and Black.

Comes with clear end caps only.

# EXTERIOR SHADES

**Overview**
- Designed to provide added sun blockage and privacy outdoors
- Not intended to serve as a wind block; in windy conditions, shade should be completely rolled up
- Available with clutch control only

**Exterior Shade Fabric Selections**

*Exterior rated materials. Need only an occasional cleaning with mild soap and water*

| Pattern Name | Fabric Code | Warranty |
|---|---|---|
| 1% E Screen | R80 | 5 years |
| 1% Sheerweave 2500 | R01 | 5 years |
| 1% Sheerweave 2701 | RS21 | 5 years |
| 1% Sheerweave 4901 | P4901 | 5 years |
| 1% Sheerweave 5000 | P5001 | 5 years |
| 3% E Screen | R81 | 5 years |
| 3% M Screen | R58 | 5 years |
| 3% Sheerweave 2410 | R06 | 5 years |
| 3% Sheerweave 2703 | P2703 | 5 years |
| 3% Sheerweave 4400 | RS2 | 5 years |
| 3% Sheerweave 4600 | P4600 | 5 years |
| 3% Sheerweave 4903 | P4903 | 5 years |
| 3% Sheerweave 5000 | R07 | 5 years |
| 3% T Screen | RS16 | 5 years |
| 4% S Screen | RS15 | 5 years |
| 5% E Screen | R51 | 5 years |
| 5% M Screen Deco | R61 | 5 years |
| 5% Sheerweave 2000 | P2000 | 5 years |
| 5% Sheerweave 2390 | RS1 | 5 years |
| 5% Sheerweave 2705 | P2705 | 5 years |
| 5% Sheerweave 4000 | R09 | 5 years |
| 5% Sheerweave 4500 | P4500 | 5 years |
| 5% Sheerweave 5000 | R10 | 5 years |
| 7% Sheerweave 5000 | R34 | 5 years |
| 10% E Screen | R19 | 5 years |
| 10% Sheerweave 2360 | P2360 | 5 years |
| 10% Sheerweave 4100 | P4100 | 5 years |
| 10% Sheerweave 5000 | R26 | 5 years |

**Clutch Lift Continuous Loop Control**
- Designed for exterior use
- Constructed of nylon casing and stainless steel interior components for smooth performance and added strength and durability

**Stainless Steel Beaded Chain Loop**
- Standard length is approximately 2/3 the length of the shade
- Longer lengths available upon request at no additional charge

**Bottom Hem – Standard Exterior Shades**
- Sealed hem pocket with aluminum bar insert
- Finished with stainless steel grommets to securely anchor the shade (inside diameter – 3/8")

**Bottom Bar – Exterior Shades with Cable Guide System**
- Round profile aluminum bottom bar
- Cable guide threads through endcaps
- Colors – White, Vanilla, and Bronze

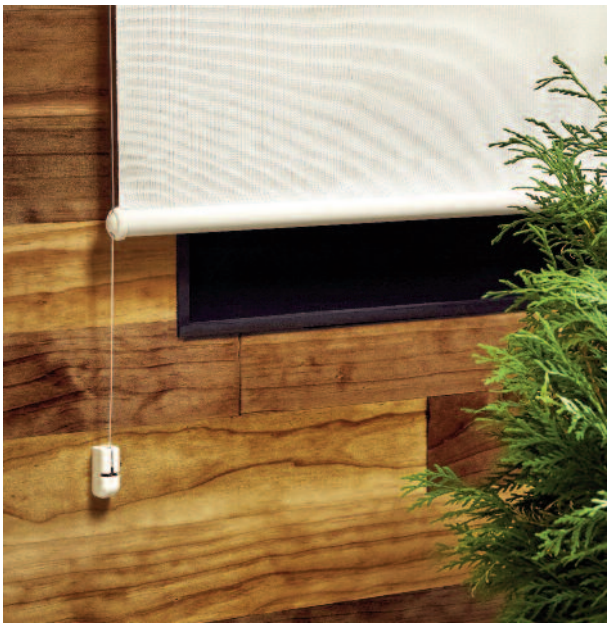

**Mounting Brackets**
- Dacramet coated rust resistant metal (ASTM rated)

**Large Cassette Option – Standard Exterior Shades**
- Same large cassette as standard shades
- Available for an added surcharge (refer to grids on price group pages)
- No fabric insert
- Colors – White, Vanilla, Bronze, Silver, and Black

**Cassette Option – Exterior Shades with Cable Guide System**
- Specially designed large cassette and bracket system
- Available for an added surcharge (refer to **Large Cassette Valance Option Surcharge** on price group pages)
- No fabric insert
- Colors – White, Vanilla, and Bronze

**4" Pocket Headrail Option – Standard Exterior Shades**
- Available for an added surcharge (refer to **Pocket Headrail, Side and Bottom Channels** section)
- Colors – White, Anodized (not available with cable guide system)

**Exterior Shade Surcharge** .....**add $34** to the price of the Clutch Roller Shade
**Exterior Shade with Cable Guide System Surcharge** .....**add $77** to the price of the Clutch Roller Shade
*(to add a cassette valance, refer to grid on price group pages)*

# EXTERIOR SHADES SIZE SPECIFICATIONS

- All Exterior Shades
  Minimum Width: 12", Minimum Height: 12"
- Maximum Sizes – Standard Exterior Shades (EXS – Skyline clutch) – refer to the **Product Size Specifications – Clutch Lift section** for detail.
- Maximum Sizes – Exterior Shades with Cable Guide (EXC – R Series clutch) – refer to **With Cable Guide System (Without Cassette)** chart below.
- Maximum Sizes – Exterior Shades with Cable Guide & Cassette (EXCC – R Series clutch) – refer to **With Cable Guide System (Cassette)** chart below.

See Product Component diagrams at the back of the guide.

| | | | With Cable Guide System (Without Cassette) - EXC | | | |
|---|---|---|---|---|---|---|
| | | | Non-Railroaded | | Railroaded | |
| **Material Name** | **FABRIC CODE** | **ROLL WIDTH** | **Maximum Width** | **Maximum Height** | **Maximum Width** | **Maximum Height** |
| 1% E Screen | R80 | 122" | 120" | 144" | 120" | 144" |
| 1% Sheerweave 2500 | R01 | 126" | 96" | 144" | 96" | 144" |
| 1% Sheerweave 2701 | RS21 | 126" | 96" | 144" | 96" | 144" |
| 1% Sheerweave 4901 | P4901 | 98" | 96" | 144" | N/A | N/A |
| 1% Sheerweave 5000 | P5001 | 98" | 96" | 144" | N/A | N/A |
| 10% E Screen | R19 | 122" | 120" | 144" | 120" | A |
| 10% Sheerweave 2360 | P2360 | 126" | 120" | 144" | N/A | N/A |
| 10% Sheerweave 4100 | P4100 | 98" | 96" | 144" | 96" | 120" |
| 10% Sheerweave 5000 | R26 | 98" | 96" | 144" | N/A | N/A |
| 3% E Screen | R81 | 122" | 120" | 144" | 120" | 144" |
| 3% M Screen | R58 | 122" | 120" | 144" | 120" | 144" |
| 3% Sheerweave 2410 | R06 | 126" | 96" | 144" | 96" | 144" |
| 3% Sheerweave 2703 | P2703 | 126" | 96" | 144" | 96" | 144" |
| 3% Sheerweave 4400 | RS2 | 126" | 96" | 144" | 96" | 144" |
| 3% Sheerweave 4600 | P4600 | 126" | 96" | 120" | 96" | 120" |
| 3% Sheerweave 4903 | P4903 | 98" | 96" | 144" | N/A | N/A |
| 3% Sheerweave 5000 | R07 | 98" | 96" | 144" | N/A | N/A |
| 3% T Screen | RS16 | 98" | 98" | 144" | 120" | 144" |
| 4% S Screen | RS15 | 122" | 96" | 144" | N/A | N/A |
| 5% E Screen | R51 | 122" | 120" | 144" | 120" | 144" |
| 5% M Screen Deco | R61 | 98" | 98" | 144" | 120" | 144" |
| 5% Sheerweave 2000 | P2000 | 126" | 96" | 144" | 96" | 120" |
| 5% Sheerweave 2390 | RS1 | 126" | 120" | 144" | 120" | 144" |
| 5% Sheerweave 2705 | P2705 | 126" | 98" | 120" | N/A | N/A |
| 5% Sheerweave 4000 | R09 | 126" | 96" | 144" | 96" | 144" |
| 5% Sheerweave 4500 | P4500 | 126" | 96" | 144" | 96" | 144" |
| 5% Sheerweave 5000 | R10 | 98" | 96" | 144" | N/A | N/A |
| 7% Sheerweave 5000 | R34 | 98" | 96" | 144" | N/A | N/A |

| | | | With Cable Guide System (with Cassette) - EXCC | | | |
|---|---|---|---|---|---|---|
| | | | Non-Railroaded | | Railroaded | |
| **Material Name** | **FABRIC CODE** | **ROLL WIDTH** | **Maximum Width** | **Maximum Height** | **Maximum Width** | **Maximum Height** |
| 1% E Screen | R80 | 122" | 120" | 144" | 120" | 144" |
| 1% Sheerweave 2500 | R01 | 126" | 96" | 120" | 96" | 120" |
| 1% Sheerweave 2701 | RS21 | 126" | 96" | 144" | 96" | 144" |
| 1% Sheerweave 4901 | P4901 | 98" | 96" | 96" | N/A | N/A |
| 1% Sheerweave 5000 | P5001 | 98" | 96" | 78" | N/A | N/A |
| 10% E Screen | R19 | 122" | 120" | 144" | 120" | 144" |
| 10% Sheerweave 2360 | P2360 | 126" | 120" | 144" | N/A | N/A |
| 10% Sheerweave 4100 | P4100 | 98" | 96" | 78" | 96" | 78" |
| 10% Sheerweave 5000 | R26 | 98" | 96" | 78" | N/A | N/A |
| 3% E Screen | R81 | 122" | 120" | 144" | 120" | 144" |
| 3% M Screen | R58 | 122" | 120" | 144" | 120" | 144" |
| 3% Sheerweave 2410 | R06 | 126" | 96" | 144" | 96" | 144" |
| 3% Sheerweave 2703 | P2703 | 126" | 96" | 96" | 96" | 96" |
| 3% Sheerweave 4400 | RS2 | 126" | 96" | 133" | 96" | 133" |
| 3% Sheerweave 4600 | P4600 | 126" | 96" | 84" | 96" | 84" |
| 3% Sheerweave 4903 | P4903 | 98" | 96" | 90" | N/A | N/A |
| 3% Sheerweave 5000 | R07 | 98" | 96" | 78" | N/A | N/A |
| 3% T Screen | RS16 | 98" | 98" | 120" | 120" | 120" |
| 4% S Screen | RS15 | 122" | 96" | 80" | N/A | N/A |
| 5% E Screen | R51 | 122" | 120" | 144" | 120" | 144" |
| 5% M Screen Deco | R61 | 98" | 98" | 120" | 120" | 120" |
| 5% Sheerweave 2000 | P2000 | 126" | 96" | 132" | 96" | 120" |
| 5% Sheerweave 2390 | RS1 | 126" | 120" | 144" | 120" | 144" |
| 5% Sheerweave 2705 | P2705 | 126" | 98" | 102" | N/A | N/A |
| 5% Sheerweave 4000 | R09 | 126" | 96" | 100" | 96" | 100" |
| 5% Sheerweave 4500 | P4500 | 126" | 96" | 108" | 96" | 108" |
| 5% Sheerweave 5000 | R10 | 98" | 96" | 78" | N/A | N/A |
| 7% Sheerweave 5000 | R34 | 98" | 96" | 78" | N/A | N/A |

## ORDERING NOTES

When ordering, please be sure to specify **DIRECTION OF ROLL**.

- Direction of Roll:
- Extended Projection Bracket (not available with Cassette Valance, Fascia, or Pocket Headrail options)

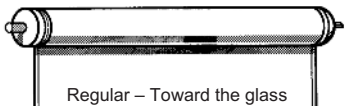

Regular – Toward the glass

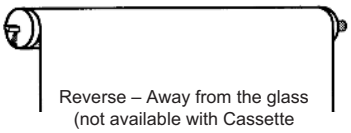

Reverse – Away from the glass (not available with Cassette Valance, Fascias or Pocket Headrail)

## 2-ON-1 OPTIONS – SPECIFY ON ORDER

- 2-on-1 headrail is only available with the Cassette Valance option for CLUTCH Beaded Chain roller shades or RemoteLift motorized shades.
- Price as 2 separate shades and add together. Refer to product specification chart for size limits (based on individual shades)

# FEATURES AND OPTIONS

| FEATURES AND OPTIONS | |
|---|---|
| Operating Systems | Clutch, TouchLift Cordless, and Motorization |
| Clutch - Beaded Chain System | Skyline (standard) R Series (optional) |
| Plastic Bead Chain | White, Black (standard), Vanilla, Bronze (optional) |
| Metal Bead Chain** (Optional) | Antique Brass, Oil Rubbed Bronze, Stainless Steel, Nickel, Black and White |
| TouchLift Cordless | Yes - available in White & Black Bar/Rail |
| PowerWand™ | Yes - available in 1 ft, 2ft, 3ft, 4ft & 5 ft in White or Black |
| Motorized Roller System | Yes - Radio Frequency (RF) - Simplicity Motorization and RemoteLift (Rollup 28 Wirefree & Sonesse Ultra 30 Wirefree Li-ion) |
| Hardwired Motorization | Yes - ST30, ST50, and ST50R |
| Cassette Valance Styles/Sizes | Small = 2-1/2" x 2-1/2", Medium = 3-1/8" x 3-3/4", Large = 3-7/8" x 3-7/8" |
| Cassette Valance Colors | White, Vanilla, Silver, Bronze & Black (Silver available in medium & large cassette only) |
| Fascias | Yes - 3" and 4" Profiles |
| Fascia Colors | White, Vanilla, Silver, Bronze, Black |
| Deluxe Valance | Yes - available in most fabrics |
| Fabric Valance | Yes - available in most fabrics |
| Pocket Headrail - Colors | Yes - 4" Profile - White and Anodized Aluminum |
| Side and Bottom Channels | Yes - White and Anodized Aluminum (side channels feature light-blocking wool pile) |
| Two-on-One Shade Option | Yes - Clutch or RemoteLift with Cassette Valance ONLY * |
| Exterior Shades | Yes - select patterns |
| Bottomrail Options | Yes - Fabric Wrapped (standard), Deluxe, Heat-Sealed Aluminum Bar **, and Flat Deco (effective 5/20/19) |
| Bottomrail Colors | Fabric Wrapped - White or Black; Deluxe & Flat Deco - White, Vanilla, Silver, Bronze, or Black |
| Decorative Shade Pulls | Yes - TouchLift Cordless System Only |
| Control Positions | R or L - Beaded Chain Clutch System Only |
| Extension Brackets | No - not available |
| Hold-Down Brackets | Yes - Fabric-Wrapped and Deluxe Bottomrails Only |
| Spacer Block | Yes - available with Standard Clutch, TouchLift, Outside Mount (OB) Deluxe Valance, Small/Medium/Large Cassette |
| Railroad Material Option | Yes - available in most fabrics |
| Seam/Splicing Fabric | Yes - available in most fabrics |
| Reverse Roll Option | Yes - not available with Cassette Valance, Fascia, or Pocket Headrail options |
| Custom Cord Length | Yes - Beaded Chain Clutch System Only |
| Warranty | Limited Lifetime (5 years for motorization) |

* Note: **2 on 1 Headrail Shades** must be ordered as either **Clutch-Beaded Chain** or **RemoteLift** and with the **Cassette Valance** option.

**2 on 1 Headrail with RemoteLift** must be ordered with **multi-channel remote control** to allow for independent shade operation.

** Highly recommended for shade size equal, wider or longer than 108" x 90", especially on shades with railroaded material. Heat sealed aluminum bar is **REQUIRED** on several materials, refer to **Collection Information** section for detail.

# PRODUCT NOTES

- **Tip to Tip Facts:**
  - On an outside mount Beaded Chain Roller, the material will cover 1" less than the tip to tip width.
  - See Finished Dimension charts for additional information

- **Additional Notes:**
  - Minor telescoping of product is possible if shade is not installed exactly level and is considered acceptable.
  - On orders with multiple shades, if one shade requires railroading, we will railroad all shades for a consistent look.
  - To assure color consistency and avoid dye lot variation, please order all shades at the same time. The availability of colors is subject to change without notice.

- **To Straighten Shade:**
  If your shade does not roll straight, correct as follows:
  Figure A - Shade veers toward right, or left. Correct by lowering shade completely exposing the roller tube and wrapping a 1-1/2" long piece of masking tape, as shown in Figure B, on the shorter side (opposite of where it's veering). This increases the diameter of the roller slightly, acting as a straightener. Then raise and lower the shade.

If shade does not still roll straight, add a second layer of tape and repeat process. Continue to add tape until shade rolls straight.

FIGURE A

FIGURE B

# FLAME-RETARDANT FABRICS

The following patterns are flame retardant and suitable for many commercial applictions. They will pass the following F.R. tests:

| Material Name | CCC-C-521E | NFPA #101 and/or #701 | FTM 191A #5903 |
|---|---|---|---|
| 1% E Screen | | X | |
| 1% Sheerweave 2500 | | X | |
| 1% Sheerweave 2701 | | X | |
| 1% Sheerweave 4901 | | X | |
| 1% Sheerweave 5000 | | X | |
| 1% Toka | | X | |
| 3% E Screen | | X | |
| 3% M Screen | | X | |
| 3% Sheerweave 2410 | | X | |
| 3% Sheerweave 2703 | | X | |
| 3% Sheerweave 4400 | | X | |
| 3% Sheerweave 4600 | | X | |
| 3% Sheerweave 4903 | | X | |
| 3% Sheerweave 5000 | | X | |
| 3% T Screen | | X | |
| 4% S Screen | | X | |
| 4% Silver Screen | | X | |

| Material Name | CCC-C-521E | NFPA #101 and/or #701 | FTM 191A #5903 |
|---|---|---|---|
| 5% E Screen | | X | |
| 5% M Screen Deco | | X | |
| 5% Sheerweave 2000 | | X | |
| 5% Sheerweave 2390 | | X | |
| 5% Sheerweave 2705 | | X | |
| 5% Sheerweave 4000 | | X | |
| 5% Sheerweave 4500 | | X | |
| 5% Sheerweave 5000 | | X | |
| 7% Global Screen | | X | |
| 7% Sheerweave 5000 | | X | |
| 10% E Screen | | X | |
| 10% Sheerweave 2360 | | X | |
| 10% Sheerweave 4100 | | X | |
| 10% Sheerweave 5000 | | X | |
| Blackout - Solid | X | X | X |
| Flocke Blackout | | X | |
| Sheerweave 7400 | | X | |
| Sheerweave 7500 | | X | |
| Sheerweave 7600 | | X | |
| Sheerweave 7650 | | X | |
| Sunscreen (SW) 7000 | | X | |

** **Avila R Blackout** is classified under ASTM E84 (Class B), fire rated for residential applications only.

# PRODUCT SIZE SPECIFICATIONS – CLUTCH LIFT

**Minimum and Maximum Standards**
**For shades 12" wide, maximum length is 60"**
**All Patterns – Minimum Width: 12"  Minimum Height: 12".**
**Spring Assist strongly recommended on shade sizes over 80" x 80".**
**For TouchLift Cordless specifications, please refer to Product Specifications – Touch Lift section.**

Please Note:  Shade sizes that are wider than the fabric roll width indicated will be made with the fabric turned width for length (railroaded). The maximum width for non-railroaded shades is the roll width unless otherwise noted.

Fabrics turned width for length will have a visible seam when fabricated longer than their maximum roll width less 10". Fabrics turned width for length may have an edge curl.  This is not considered a defect in the product.

| Material Name | Roll Width | Railroad Option | Splice/ Seam | | Standard Clutch | Fabric Valance | Deluxe Valance | Small Cassette | Medium Cassette | Large Cassette | 3" Fascia | 4" Fascia | Pocket Headrail | Spring Assist Clutch Standard Shade | Spring Assist Clutch 4" Fascia | Spring Assist Clutch Pocket |
|---|---|---|---|---|---|---|---|---|---|---|---|---|---|---|---|---|
| 1% E Screen | 122" | YES | YES | **Non-Railroaded** | | | | | | | | | | | | |
| | | | | **Maximum Width** | 122"** | 102" | 102" | 72" | 102" | 102" | 102" | 122"** | 122"** | 122"** | 122"** | 122"** |
| | | | | **R Series clutch - max width - 120" | Maximum Height | | | | | | | | | Maximum Height | | |
| | | | | **For Shade Widths to 84"** | 144" | 144" | 144" | 74"* | 138" | 144" | 144" | 144" | 144" | 144" | 144" | 144" |
| | | | | **For Shade Widths to 90"** | 144" | 138" | 138" | NA | 138" | 138" | 138" | 144" | 144" | 144" | 144" | 144" |
| | | | | **For Shade Widths to 96"** | 144" | 108" | 108" | NA | 108" | 108" | 108" | 144" | 144" | 144" | 144" | 144" |
| | | | | **For Shade Widths over 96"** | 144" | 84" | 84" | NA | 84" | 84" | 84" | 144" | 144" | 144" | 144" | 144" |
| | | | | | *Small cassette - max shade size is 72" x 74" | | | | | | | | | | | |
| | | | | **Railroaded** | | | | | | | | | | | | |
| | | | | **Maximum Width** | 144"** | 102" | 102" | 72" | 102" | 102" | 102" | 144"** | 144"** | 144"** | 144"** | 144"** |
| | | | | **R Series clutch - max width - 120" | Maximum Height | | | | | | | | | Maximum Height | | |
| | | | | **For Shade Widths to 84"** | 144" | 144" | 144" | 74"* | 138" | 144" | 144" | 144" | 144" | 144" | 144" | 144" |
| | | | | **For Shade Widths to 90"** | 144" | 138" | 138" | NA | 138" | 138" | 138" | 144" | 144" | 144" | 144" | 144" |
| | | | | **For Shade Widths to 96"** | 144" | 108" | 108" | NA | 108" | 108" | 108" | 144" | 144" | 144" | 144" | 144" |
| | | | | **For Shade Widths to 102"** | 144" | 84" | 84" | NA | 84" | 84" | 84" | 144" | 144" | 144" | 144" | 144" |
| | | | | **For Shade Widths over 102"** | 144" | NA | NA | NA | NA | NA | NA | 144" | 144" | 144" | 144" | 144" |
| | | | | | *Small cassette - max shade size is 72" x 74" | | | | | | | | | | | |
| 1% Sheerweave 2500 | 126" | YES | YES | **Non-Railroaded** | | | | | | | | | | | | |
| | | | | **Maximum Width** | 126"** | 102"** | 102"** | 65" | 102"** | 102"** | 102"** | 126"** | 126"** | 126"** | 126"** | 126"** |
| | | | | **R Series clutch - max width - 96" | Maximum Height | | | | | | | | | | | |
| | | | | **For Shade Widths to 78"** | 144" | 144" | 144" | 60"* | 114" | 144" | 144" | 144" | 144" | NA | NA | NA |
| | | | | **For Shade Widths to 84"** | 144" | 126" | 126" | NA | 114" | 126" | 126" | 144" | 144" | 144" | 144" | 114" |
| | | | | **For Shade Widths to 90"** | 144" | 114" | 114" | NA | 96" | 114" | 96" | 144" | 144" | 144" | 144" | 114" |
| | | | | **For Shade Widths to 96"** | 144" | 114" | 114" | NA | 78" | 114" | 90" | 144" | 144" | 144" | 144" | 114" |
| | | | | **For Shade Widths to 102"** | 144" | 60" | 60" | NA | 60" | 60" | 60" | 144" | 144" | 144" | 144" | 114" |
| | | | | **For Shade Width over 102"** | 144" | NA | NA | NA | NA | NA | NA | 144" | 114" | 144" | 144" | 114" |
| | | | | | *Small cassette - max shade size is 65" x 60" | | | | | | | | | | | |
| | | | | **Railroaded** | | | | | | | | | | | | |
| | | | | **Maximum Width** | 144"** | 102"** | 102"** | 65" | 102"** | 102"** | 102"** | 144"** | 144"** | 144"** | 144"** | 144"** |
| | | | | **R Series clutch - max width - 96" | Maximum Height | | | | | | | | | Maximum Height | | |
| | | | | **For Shade Widths to 78"** | 144" | 144" | 144" | 60"* | 114" | 144" | 144" | 144" | 144" | NA | NA | NA |
| | | | | **For Shade Widths to 84"** | 144" | 126" | 126" | NA | 114" | 126" | 126" | 144" | 144" | 144" | 144" | 114" |
| | | | | **For Shade Widths to 90"** | 144" | 114" | 114" | NA | 96" | 114" | 96" | 144" | 144" | 144" | 144" | 114" |
| | | | | **For Shade Widths to 96"** | 144" | 114" | 114" | NA | 78" | 114" | 90" | 144" | 144" | 144" | 144" | 114" |
| | | | | **For Shade Widths to 102"** | 144" | 60" | 60" | NA | 60" | 60" | 60" | 144" | 144" | 144" | 144" | 114" |
| | | | | **For Shade Widths to 108"** | 144" | NA | NA | NA | NA | NA | NA | 144" | 144" | 144" | 144" | 114" |
| | | | | **For Shade Widths over 108"** | 144" | NA | NA | NA | NA | NA | NA | 144" | 114" | 144" | 144" | 114" |
| | | | | | *Small cassette - max shade size is 65" x 60" | | | | | | | | | | | |
| 1% Sheerweave 2701 | 126" | YES | YES | **Non-Railroaded** | | | | | | | | | | | | |
| | | | | **Maximum Width** | 126"** | 108"** | 108"** | 84" | 108"** | 108"** | 108"** | 126"** | 126"** | 126"** | 126"** | 126"** |
| | | | | **R Series clutch - max width - 96" | Maximum Height | | | | | | | | | Maximum Height | | |
| | | | | **For Shade Widths to 72"** | 144" | 144" | 144" | 72" | 138" | 144" | 144" | 144" | 144" | NA | NA | NA |
| | | | | **For Shade Widths to 84"** | 144" | 144" | 144" | 42" | 126" | 144" | 126" | 144" | 144" | 144" | 144" | 144" |
| | | | | **For Shade Widths to 90"** | 144" | 144" | 144" | NA | 96" | 144" | 114" | 144" | 144" | 144" | 144" | 144" |
| | | | | **For Shade Widths to 96"** | 144" | 144" | 144" | NA | 78" | 144" | 114" | 144" | 144" | 144" | 144" | 144" |
| | | | | **For Shade Widths to 102"** | 144" | 60" | 60" | NA | 60" | 60" | 60" | 144" | 144" | 144" | 144" | 144" |
| | | | | **For Shade Widths over 102"** | 144" | 48" | 48" | NA | 48" | 48" | 48" | 144" | 144" | 144" | 144" | 144" |
| | | | | **Railroaded** | | | | | | | | | | | | |
| | | | | **Maximum Width** | 144"** | 108"** | 108"** | 84" | 108"** | 108"** | 108"** | 144"** | 144"** | 144"** | 144"** | 144"** |
| | | | | **R Series clutch - max width - 96" | Maximum Height | | | | | | | | | Maximum Height | | |
| | | | | **For Shade Widths to 72"** | 144" | 144" | 144" | 72" | 138" | 144" | 144" | 144" | 144" | NA | NA | NA |
| | | | | **For Shade Widths to 84"** | 144" | 144" | 144" | 42" | 126" | 144" | 126" | 144" | 144" | 144" | 144" | 144" |
| | | | | **For Shade Widths to 90"** | 144" | 144" | 144" | NA | 96" | 144" | 114" | 144" | 144" | 144" | 144" | 144" |
| | | | | **For Shade Widths to 96"** | 144" | 144" | 144" | NA | 78" | 144" | 114" | 144" | 144" | 144" | 144" | 144" |
| | | | | **For Shade Widths to 102"** | 144" | 60" | 60" | NA | 60" | 60" | 60" | 144" | 144" | 144" | 144" | 144" |
| | | | | **For Shade Widths to 126"** | 144" | 48" | 48" | NA | 48" | 48" | 48" | 144" | 144" | 144" | 144" | 144" |
| | | | | **For Shade Widths over 126"** | 144" | NA | NA | NA | NA | NA | NA | 144" | 144" | 144" | 144" | 144" |
| 1% Sheerweave 4901 | 98" | NO | NO | **Non-Railroaded** | | | | | | | | | | | | |
| | | | | **Maximum Width** | 98"** | 88" | 88" | 84" | 98"** | 98"** | 98"** | 98"** | 98"** | 98"** | 98"** | 98"** |
| | | | | **R Series clutch - max width - 96" | Maximum Height | | | | | | | | | Maximum Height | | |
| | | | | **For Shade Widths to 60"** | 144" | 144" | 144" | 48" | 120" | 144" | 144" | 144" | 144" | NA | NA | NA |
| | | | | **For Shade Widths to 66"** | 144" | 144" | 144" | 48" | 114" | 144" | 126" | 144" | 144" | NA | NA | NA |
| | | | | **For Shade Widths to 78"** | 144" | 144" | 144" | 48" | 96" | 144" | 126" | 144" | 144" | NA | NA | NA |
| | | | | **For Shade Widths to 84"** | 144" | 126" | 126" | 42" | 96" | 126" | 126" | 144" | 144" | 144" | 144" | 96" |
| | | | | **For Shade Widths to 90"** | 144" | NA | NA | NA | 96" | 96" | 96" | 144" | 144" | 144" | 144" | 96" |
| | | | | **For Shade Widths to 96"** | 144" | NA | NA | NA | 78" | 96" | 78" | 144" | 144" | 144" | 144" | 96" |
| | | | | **For Shade Widths over 96"** | 144" | NA | NA | NA | 60" | 60" | 78" | 144" | 144" | 144" | 144" | 96" |
| 1% Sheerweave 5000 | 98" | NO | NO | **Non-Railroaded** | | | | | | | | | | | | |
| | | | | **Maximum Width** | 98"** | 90" | 90" | NA | 96" | 96" | 96" | 98"** | 98"** | 98"** | 98"** | 98"** |
| | | | | **R Series clutch - max width - 96" | Maximum Height | | | | | | | | | Maximum Height | | |
| | | | | **For Shade Widths to 60"** | 144" | 102" | 102" | NA | 66" | 102" | 102" | 120" | 120" | NA | NA | NA |
| | | | | **For Shade Widths over 60"** | 144" | 78" | 78" | NA | 54" | 78" | 78" | 120" | 90" | 144" | 90" | 90" |

# PRODUCT SIZE SPECIFICATIONS – CLUTCH LIFT

**Minimum and Maximum Standards**
**For shades 12" wide, maximum length is 60"**
**All Patterns – Minimum Width: 12"  Minimum Height: 12".**
**Spring Assist strongly recommended on shade sizes over 80" x 80".**
**For TouchLift Cordless specifications, please refer to Product Specifications – Touch Lift section.**

Please Note:  Shade sizes that are wider than the fabric roll width indicated will be made with the fabric turned width for length (railroaded). The maximum width for non-railroaded shades is the roll width unless otherwise noted.

Fabrics turned width for length will have a visible seam when fabricated longer than their maximum roll width less 10". Fabrics turned width for length may have an edge curl.  This is not considered a defect in the product.

| Material Name | Roll Width | Railroad Option | Splice/ Seam | | Standard Clutch | Fabric Valance | Deluxe Valance | Small Cassette | Medium Cassette | Large Cassette | 3" Fascia | 4" Fascia | Pocket Headrail | Spring Assist Clutch Standard Shade | Spring Assist Clutch 4" Fascia | Spring Assist Clutch Pocket |
|---|---|---|---|---|---|---|---|---|---|---|---|---|---|---|---|---|
| 1% Toka | 118" | YES | YES | **Non-Railroaded** | | | | | | | | | | | | |
| | | | | **Maximum Width** | 118"** | 108"** | 108"** | 84" | 108"** | 108"** | 108"** | 118"** | 118"** | 118"** | 118"** | 118"** |
| | | | | **R Series clutch - max width - 96" | Maximum Height | | | | | | | | | Maximum Height | | |
| | | | | **For Shade Widths to 66"** | 144" | 144" | 144" | 48" | 114" | 144" | 132" | 144" | 144" | NA | NA | NA |
| | | | | **For Shade Widths to 72"** | 144" | 144" | 144" | 48" | 96" | 144" | 132" | 144" | 144" | NA | NA | NA |
| | | | | **For Shade Widths to 84"** | 144" | 126" | 126" | 42" | 96" | 126" | 126" | 144" | 144" | 144" | 144" | 102" |
| | | | | **For Shade Widths to 90"** | 144" | 102" | 102" | NA | 96" | 102" | 96" | 144" | 144" | 144" | 144" | 102" |
| | | | | **For Shade Widths to 96"** | 144" | 102" | 102" | NA | 78" | 102" | 82" | 144" | 144" | 144" | 144" | 102" |
| | | | | **For Shade Widths to 102"** | 144" | 60" | 60" | NA | 60" | 60" | 60" | 144" | 144" | 144" | 144" | 102" |
| | | | | **For Shade Widths over 102"** | 144" | 48" | 48" | NA | 48" | 48" | 48" | 144" | 114" | 144" | 144" | 102" |
| | | | | **Railroaded** | | | | | | | | | | | | |
| | | | | | 144"** | 108"** | 108"** | 84" | 108"** | 108"** | 108"** | 144"** | 144"** | 144"** | 144"** | 144"** |
| | | | | **R Series clutch - max width -96 " | Maximum Height | | | | | | | | | Maximum Height | | |
| | | | | **For Shade Widths to 66"** | 144" | 144" | 144" | 48" | 114" | 144" | 132" | 144" | 144" | NA | NA | NA |
| | | | | **For Shade Widths to 72"** | 144" | 144" | 144" | 48" | 96" | 144" | 132" | 144" | 144" | NA | NA | NA |
| | | | | **For Shade Widths to 84"** | 144" | 126" | 126" | 42" | 96" | 126" | 126" | 144" | 144" | 144" | 144" | 102" |
| | | | | **For Shade Widths to 90"** | 144" | 102" | 102" | NA | 96" | 102" | 96" | 144" | 144" | 144" | 144" | 102" |
| | | | | **For Shade Widths to 96"** | 144" | 102" | 102" | NA | 78" | 102" | 82" | 144" | 144" | 144" | 144" | 102" |
| | | | | **For Shade Widths to 102"** | 144" | 60" | 60" | NA | 60" | 60" | 60" | 144" | 144" | 144" | 144" | 102" |
| | | | | **For Shade Widths to 108"** | 144" | 48" | 48" | NA | 48" | 48" | 48" | 144" | 144" | 144" | 144" | 102" |
| | | | | **For Shade Widths over 108"** | 144" | NA | NA | NA | NA | NA | NA | 144" | 114" | 144" | 144" | 102" |
| 3% E Screen | 122" | YES | YES | **Non-Railroaded** | | | | | | | | | | | | |
| | | | | **Maximum Width** | 122"** | 110" | 110" | 72" | 102" | 120" | 120" | 122"** | 122"** | 122"** | 122"** | 122"** |
| | | | | **R Series clutch - max width - 120" | Maximum Height | | | | | | | | | Maximum Height | | |
| | | | | **For Shade Widths to 84"** | 144" | 144" | 144" | 84"* | 144" | 144" | 144" | 144" | 144" | 144" | 144" | 144" |
| | | | | **For Shade Widths to 90"** | 144" | 144" | 144" | NA | 138" | 144" | 144" | 144" | 144" | 144" | 144" | 144" |
| | | | | **For Shade Widths to 96"** | 144" | 144" | 144" | NA | 108" | 144" | 144" | 144" | 144" | 144" | 144" | 144" |
| | | | | **For Shade Widths over 96"** | 144" | 144" | 144" | NA | 84" | 144" | 144" | 144" | 144" | 144" | 144" | 144" |
| | | | | | *Small cassette - max shade size is 72" x 84" | | | | | | | | | | | |
| | | | | **Railroaded** | | | | | | | | | | | | |
| | | | | **Maximum Width** | 144"** | 110" | 110" | 72" | 102" | 120" | 120" | 144"** | 144"** | 144"** | 144"** | 144"** |
| | | | | **R Series clutch - max width - 120" | Maximum Height | | | | | | | | | Maximum Height | | |
| | | | | **For Shade Widths to 84"** | 144" | 144" | 144" | 84"* | 144" | 144" | 144" | 144" | 144" | 144" | 144" | 144" |
| | | | | **For Shade Widths to 90"** | 144" | 144" | 144" | NA | 138" | 144" | 144" | 144" | 144" | 144" | 144" | 144" |
| | | | | **For Shade Widths to 96"** | 144" | 144" | 144" | NA | 108" | 144" | 144" | 144" | 144" | 144" | 144" | 144" |
| | | | | **For Shade Widths to 102"** | 144" | 144" | 144" | NA | 84" | 144" | 144" | 144" | 144" | 144" | 144" | 144" |
| | | | | **For Shade Widths to 110"** | 144" | 144" | 144" | NA | NA | 144" | 144" | 144" | 144" | 144" | 144" | 144" |
| | | | | **For Shade Widths to 120"** | 144" | NA | NA | NA | NA | 144" | 144" | 144" | 144" | 144" | 144" | 144" |
| | | | | **For Shade Widths over 120"** | 144" | NA | NA | NA | NA | NA | NA | 144" | 144" | 144" | 144" | 144" |
| | | | | | *Small cassette - max shade width is 72" | | | | | | | | | | | |
| 3% M Screen | 122" | YES | YES | **Non-Railroaded** | | | | | | | | | | | | |
| | | | | **Maximum Width** | 122"** | 112" | 112" | 84" | 108" | 120" | 120" | 122"** | 122"** | 122"** | 122"** | 122"** |
| | | | | **R Series clutch - max width - 120" | Maximum Height | | | | | | | | | Maximum Height | | |
| | | | | **For Shade Widths to 78"** | 144" | 144" | 144" | 75" | 144" | 144" | 144" | 144" | 144" | NA | NA | NA |
| | | | | **For Shade Widths to 84"** | 144" | 144" | 144" | 60" | 144" | 144" | 144" | 144" | 144" | 144" | 144" | 144" |
| | | | | **For Shade Widths to 90"** | 144" | 144" | 144" | NA | 138" | 144" | 138" | 144" | 144" | 144" | 144" | 144" |
| | | | | **For Shade Widths over 90"** | 144" | 144" | 144" | NA | 66" | 144" | 120" | 144" | 144" | 144" | 144" | 144" |
| | | | | **Railroaded** | | | | | | | | | | | | |
| | | | | **Maximum Width** | 144"** | 120" | 120" | 84" | 108" | 120" | 120" | 144"** | 144"** | 144"** | 144"** | 144"** |
| | | | | **R Series clutch - max width - 120" | Maximum Height | | | | | | | | | Maximum Height | | |
| | | | | **For Shade Widths to 78"** | 144" | 144" | 144" | 75" | 144" | 144" | 144" | 144" | 144" | NA | NA | NA |
| | | | | **For Shade Widths to 84"** | 144" | 144" | 144" | 60" | 144" | 144" | 144" | 144" | 144" | 144" | 144" | 144" |
| | | | | **For Shade Widths to 90"** | 144" | 144" | 144" | NA | 138" | 144" | 138" | 144" | 144" | 144" | 144" | 144" |
| | | | | **For Shade Widths to 108"** | 144" | 144" | 144" | NA | 66" | 144" | 118" | 144" | 144" | 144" | 144" | 144" |
| | | | | **For Shade Widths to 120"** | 144" | 144" | 144" | NA | NA | 144" | 118" | 144" | 144" | 144" | 144" | 144" |
| | | | | **For Shade Widths over 120"** | 144" | NA | NA | NA | NA | NA | NA | 144" | 144" | 144" | 144" | 144" |
| 3% Sheerweave 2410 | 126" | YES | YES | **Non-Railroaded** | | | | | | | | | | | | |
| | | | | **Maximum Width** | 126"** | 102"** | 102"** | 78" | 96" | 102"** | 102"** | 126"** | 126"** | 126"** | 126"** | 126"** |
| | | | | **R Series clutch - max width - 96" | Maximum Height | | | | | | | | | Maximum Height | | |
| | | | | **For Shade Widths to 78"** | 144" | 144" | 144" | 60" | 144" | 144" | 144" | 144" | 144" | NA | NA | NA |
| | | | | **For Shade Widths to 84"** | 144" | 144" | 144" | NA | 126" | 144" | 126" | 144" | 144" | 144" | 144" | 144" |
| | | | | **For Shade Widths to 90"** | 144" | 144" | 144" | NA | 96" | 144" | 120" | 144" | 144" | 144" | 144" | 144" |
| | | | | **For Shade Widths to 96"** | 144" | 144" | 144" | NA | 78" | 144" | 120" | 144" | 144" | 144" | 144" | 144" |
| | | | | **For Shade Widths over 96"** | 144" | 60" | 60" | NA | NA | 60" | 60" | 144" | 144" | 144" | 144" | 144" |
| | | | | **Railroaded** | | | | | | | | | | | | |
| | | | | **Maximum Width** | 144"** | 102"** | 102"** | 78" | 96" | 102"** | 102"** | 144"** | 144"** | 144"** | 144"** | 144"** |
| | | | | **R Series clutch - max width - 96" | Maximum Height | | | | | | | | | Maximum Height | | |
| | | | | **For Shade Widths to 78"** | 144" | 144" | 144" | 60" | 144" | 144" | 144" | 144" | 144" | NA | NA | NA |
| | | | | **For Shade Widths to 84"** | 144" | 144" | 144" | NA | 126" | 144" | 126" | 144" | 144" | 144" | 144" | 144" |
| | | | | **For Shade Widths to 90"** | 144" | 144" | 144" | NA | 96" | 144" | 120" | 144" | 144" | 144" | 144" | 144" |
| | | | | **For Shade Widths to 96"** | 144" | 144" | 144" | NA | 78" | 144" | 120" | 144" | 144" | 144" | 144" | 144" |
| | | | | **For Shade Widths to 102"** | 144" | 60" | 60" | NA | NA | 60" | 60" | 144" | 144" | 144" | 144" | 144" |
| | | | | **For Shade Widths over 102"** | 144" | NA | NA | NA | NA | NA | NA | 144" | 144" | 144" | 144" | 144" |

# PRODUCT SIZE SPECIFICATIONS – CLUTCH LIFT

**Minimum and Maximum Standards**
**For shades 12" wide, maximum length is 60"**
**All Patterns – Minimum Width: 12"  Minimum Height: 12".**
**Spring Assist strongly recommended on shade sizes over 80" x 80".**
**For TouchLift Cordless specifications, please refer to Product Specifications – Touch Lift section.**

Please Note:  Shade sizes that are wider than the fabric roll width indicated will be made with the fabric turned width for length (railroaded). The maximum width for non-railroaded shades is the roll width unless otherwise noted.

Fabrics turned width for length will have a visible seam when fabricated longer than their maximum roll width less 10".
Fabrics turned width for length may have an edge curl.  This is not considered a defect in the product.

| Material Name | Roll Width | Railroad Option | Splice/ Seam | | Standard Clutch | Fabric Valance | Deluxe Valance | Small Cassette | Medium Cassette | Large Cassette | 3" Fascia | 4" Fascia | Pocket Headrail | Spring Assist Clutch Standard Shade | Spring Assist Clutch 4" Fascia | Spring Assist Clutch Pocket |
|---|---|---|---|---|---|---|---|---|---|---|---|---|---|---|---|---|
| 3% Sheerweave 2703 | 126" | YES | YES | **Non-Railroaded** | | | | | | | | | | | | |
| | | | | **Maximum Width** | 124"** | 108"** | 108"** | 84" | 108"** | 108"** | 124"** | 124"** | 124"** | 124"** | 124"** | 124"** |
| | | | | **R Series clutch - max width - 96" | Maximum Height | | | | | | | | | Maximum Height | | |
| | | | | **For Shade Widths to 66"** | 144" | 144" | 144" | 48" | 114" | 144" | 126" | 144" | 144" | NA | NA | NA |
| | | | | **For Shade Widths to 72"** | 144" | 144" | 144" | 48" | 96" | 144" | 126" | 144" | 144" | NA | NA | NA |
| | | | | **For Shade Widths to 84"** | 144" | 126" | 126" | 42" | 96" | 126" | 126" | 144" | 144" | 144" | 144" | 96" |
| | | | | **For Shade Widths to 90"** | 144" | 96" | 96" | NA | 96" | 96" | 96" | 144" | 144" | 144" | 144" | 96" |
| | | | | **For Shade Widths to 96"** | 144" | 96" | 96" | NA | 78" | 96" | 78" | 144" | 144" | 144" | 144" | 96" |
| | | | | **For Shade Widths to 102"** | 144" | 60" | 60" | NA | 60" | 60" | 78" | 144" | 144" | 144" | 144" | 96" |
| | | | | **For Shade Widths over 102"** | 144" | 48" | 48" | NA | 48" | 48" | 78" | 144" | 96" | 144" | 144" | 96" |
| | | | | **Railroaded** | | | | | | | | | | | | |
| | | | | **Maximum Width** | 144"** | 108"** | 108"** | 84" | 108"** | 108"** | 124"** | 144"** | 144"** | 144"** | 144"** | 144"** |
| | | | | **R Series clutch - max width - 96" | Maximum Height | | | | | | | | | Maximum Height | | |
| | | | | **For Shade Widths to 66"** | 144" | 144" | 144" | 48" | 114" | 144" | 126" | 144" | 144" | NA | NA | NA |
| | | | | **For Shade Widths to 72"** | 144" | 144" | 144" | 48" | 96" | 144" | 126" | 144" | 144" | NA | NA | NA |
| | | | | **For Shade Widths to 84"** | 144" | 126" | 126" | 42" | 96" | 126" | 126" | 144" | 144" | 144" | 144" | 96" |
| | | | | **For Shade Widths to 90"** | 144" | 96" | 96" | NA | 96" | 96" | 96" | 144" | 144" | 144" | 144" | 96" |
| | | | | **For Shade Widths to 96"** | 144" | 96" | 96" | NA | 78" | 96" | 78" | 144" | 144" | 144" | 144" | 96" |
| | | | | **For Shade Widths to 102"** | 144" | 60" | 60" | NA | 60" | 60" | 78" | 144" | 144" | 144" | 144" | 96" |
| | | | | **For Shade Widths over 102"** | 144" | 48" | 48" | NA | 48" | 48" | 78" | 144" | 96" | 144" | 144" | 96" |
| 3% Sheerweave 4400 | 126" | YES | YES | **Non-Railroaded** | | | | | | | | | | | | |
| | | | | **Maximum Width** | 124"** | 108"** | 108"** | 84" | 108"** | 108"** | 108"** | 124"** | 124"** | 124"** | 124"** | 124"** |
| | | | | **R Series clutch - max width - 96" | Maximum Height | | | | | | | | | Maximum Height | | |
| | | | | **For Shade Widths to 66"** | 144" | 126" | 126" | 40" | 100" | 126" | 114" | 144" | 144" | NA | NA | NA |
| | | | | **For Shade Widths to 72"** | 144" | 126" | 126" | 40" | 84" | 126" | 108" | 144" | 144" | NA | NA | NA |
| | | | | **For Shade Widths to 84"** | 144" | 126" | 126" | 40" | 78" | 126" | 108" | 144" | 132" | 144" | 144" | 80" |
| | | | | **For Shade Widths to 90"** | 144" | 96" | 96" | NA | 78" | 96" | 96" | 144" | 132" | 144" | 144" | 80" |
| | | | | **For Shade Widths to 96"** | 144" | 78" | 78" | NA | 78" | 78" | 78" | 144" | 132" | 144" | 144" | 80" |
| | | | | **For Shade Widths to 102"** | 144" | 60" | 60" | NA | 60" | 60" | 60" | 144" | 132" | 144" | 144" | 80" |
| | | | | **For Shade Widths over 102"** | 144" | 48" | 48" | NA | 48" | 48" | 48" | 144" | 90" | 144" | 144" | 80" |
| | | | | **Railroaded** | | | | | | | | | | | | |
| | | | | **Maximum Width** | 144"** | 108"** | 108"** | 84" | 108"** | 108"** | 124"** | 144"** | 144"** | 144"** | 144"** | 144"** |
| | | | | **R Series clutch - max width - 96" | Maximum Height | | | | | | | | | Maximum Height | | |
| | | | | **For Shade Widths to 66"** | 144" | 126" | 126" | 40" | 102" | 126" | 114" | 144" | 144" | NA | NA | NA |
| | | | | **For Shade Widths to 72"** | 144" | 126" | 126" | 40" | 84" | 126" | 108" | 144" | 144" | NA | NA | NA |
| | | | | **For Shade Widths to 84"** | 144" | 126" | 126" | 40" | 78" | 126" | 108" | 144" | 132" | 144" | 144" | 78" |
| | | | | **For Shade Widths to 90"** | 144" | 96" | 96" | NA | 78" | 96" | 96" | 144" | 132" | 144" | 144" | 78" |
| | | | | **For Shade Widths to 96"** | 144" | 78" | 78" | NA | 78" | 78" | 78" | 144" | 132" | 144" | 144" | 78" |
| | | | | **For Shade Widths to 102"** | 144" | 60" | 60" | NA | 60" | 60" | 60" | 144" | 132" | 144" | 144" | 78" |
| | | | | **For Shade Widths to 108"** | 144" | 48" | 48" | NA | 48" | 48" | 60" | 144" | 132" | 144" | 144" | 78" |
| | | | | **For Shade Widths over 108"** | 144" | NA | NA | NA | NA | NA | 60" | 144" | 78" | 144" | 144" | 78" |
| 3% Sheerweave 4600 | 126" | YES | YES | **Non-Railroaded** | | | | | | | | | | | | |
| | | | | **Maximum Width** | 98"** | 98"** | 98"** | 84" | 98"** | 98"** | 98"** | 98"** | 98"** | 98"** | 98"** | 98"** |
| | | | | **R Series clutch - max width - 96" | Maximum Height | | | | | | | | | Maximum Height | | |
| | | | | **For Shade Widths to 60"** | 120" | 120" | 120" | 42" | 108" | 120" | 120" | 120" | 120" | NA | NA | NA |
| | | | | **For Shade Widths to 66"** | 120" | 120" | 120" | 42" | 108" | 120" | 114" | 120" | 120" | NA | NA | NA |
| | | | | **For Shade Widths to 78"** | 120" | 120" | 120" | 42" | 84" | 120" | 114" | 120" | 120" | NA | NA | NA |
| | | | | **For Shade Widths to 84"** | 120" | 120" | 120" | 42" | 84" | 120" | 114" | 120" | 120" | 120" | 120" | 84" |
| | | | | **For Shade Widths to 90"** | 120" | 96" | 96" | NA | 84" | 96" | 96" | 120" | 120" | 120" | 120" | 84" |
| | | | | **For Shade Widths to 96"** | 120" | 84" | 84" | NA | 78" | 84" | 78" | 120" | 120" | 120" | 120" | 84" |
| | | | | **For Shade Widths over 96"** | 120" | 60" | 60" | NA | 60" | 60" | 66" | 120" | 120" | 120" | 120" | 84" |
| | | | | **Railroaded** | | | | | | | | | | | | |
| | | | | **Maximum Width** | 120"** | 108"** | 108"** | 84" | 108"** | 108"** | 120"** | 120"** | 120"** | 120"** | 120"** | 120"** |
| | | | | **R Series clutch - max width - 96" | Maximum Height | | | | | | | | | Maximum Height | | |
| | | | | **For Shade Widths to 66"** | 120" | 120" | 120" | 42" | 108" | 120" | 114" | 120" | 120" | NA | NA | NA |
| | | | | **For Shade Widths to 72"** | 120" | 120" | 120" | 42" | 84" | 120" | 114" | 120" | 120" | NA | NA | NA |
| | | | | **For Shade Widths to 84"** | 120" | 120" | 120" | 42" | 84" | 120" | 114" | 120" | 120" | 120" | 120" | 84" |
| | | | | **For Shade Widths to 90"** | 120" | 96" | 96" | NA | 84" | 96" | 96" | 120" | 120" | 120" | 120" | 84" |
| | | | | **For Shade Widths to 96"** | 120" | 84" | 84" | NA | 78" | 84" | 78" | 120" | 120" | 120" | 120" | 84" |
| | | | | **For Shade Widths to 102"** | 120" | 60" | 60" | NA | 60" | 60" | 66" | 120" | 120" | 120" | 120" | 84" |
| | | | | **For Shade Widths over 102"** | 120" | 48" | 48" | NA | 48" | 48" | 66" | 120" | 114" | 120" | 120" | 84" |
| 3% Sheerweave 4903 | 98" | NO | NO | **Non-Railroaded** | | | | | | | | | | | | |
| | | | | **Maximum Width** | 98"** | 88" | 88" | 84" | 98"** | 98"** | 98"** | 98"** | 98"** | 98"** | 98"** | 98"** |
| | | | | **R Series clutch - max width - 96" | Maximum Height | | | | | | | | | Maximum Height | | |
| | | | | **For Shade Widths to 60"** | 144" | 144" | 144" | 48" | 120" | 144" | 144" | 144" | 144" | NA | NA | NA |
| | | | | **For Shade Widths to 66"** | 144" | 144" | 144" | 48" | 114" | 144" | 126" | 144" | 144" | NA | NA | NA |
| | | | | **For Shade Widths to 78"** | 144" | 144" | 144" | 48" | 90" | 144" | 126" | 144" | 144" | NA | NA | NA |
| | | | | **For Shade Widths to 84"** | 144" | 126" | 126" | 42" | 90" | 126" | 126" | 144" | 144" | 144" | 144" | 96" |
| | | | | **For Shade Widths to 88"** | 144" | 96" | 96" | NA | 90" | 96" | 96" | 144" | 144" | 144" | 144" | 96" |
| | | | | **For Shade Widths to 90"** | 144" | NA | NA | NA | 90" | 96" | 96" | 144" | 144" | 144" | 144" | 96" |
| | | | | **For Shade Widths to 96"** | 144" | NA | NA | NA | 78" | 90" | 78" | 144" | 144" | 144" | 144" | 96" |
| | | | | **For Shade Widths over 96"** | 144" | NA | NA | NA | 60" | 60" | 78" | 144" | 144" | 144" | 144" | 96" |

# PRODUCT SIZE SPECIFICATIONS – CLUTCH LIFT

**Minimum and Maximum Standards**
**For shades 12" wide, maximum length is 60"**
**All Patterns – Minimum Width: 12"  Minimum Height: 12".**
**Spring Assist strongly recommended on shade sizes over 80" x 80".**
**For TouchLift Cordless specifications, please refer to Product Specifications – Touch Lift section.**

Please Note:  Shade sizes that are wider than the fabric roll width indicated will be made with the fabric turned width for length (railroaded). The maximum width for non-railroaded shades is the roll width unless otherwise noted.

Fabrics turned width for length will have a visible seam when fabricated longer than their maximum roll width less 10". Fabrics turned width for length may have an edge curl.  This is not considered a defect in the product.

| Material Name | Roll Width | Railroad Option | Splice/ Seam | | Standard Clutch | Fabric Valance | Deluxe Valance | Small Cassette | Medium Cassette | Large Cassette | 3" Fascia | 4" Fascia | Pocket Headrail | Spring Assist Clutch Standard Shade | Spring Assist Clutch 4" Fascia | Spring Assist Clutch Pocket |
|---|---|---|---|---|---|---|---|---|---|---|---|---|---|---|---|---|
| 3% Sheerweave 5000 | 98" | NO | NO | Non-Railroaded | | | | | | | | | | | | |
| *(R07_02, 04, 05, 07, 10)* | | | | **Maximum Width** | **98"**** | **90"** | **90"** | **NA** | **84"** | **96"** | **96"** | **98"**** | **98"**** | **98"**** | **98"**** | **98"**** |
| | | | | **R Series clutch - max width -96" | Maximum Height | | | | | | | | | Maximum Height | | |
| | | | | **For Shade Widths to 60"** | 144" | 90" | 90" | NA | 60" | 90" | 90" | 120" | 102" | NA | NA | NA |
| | | | | **For Shade Widths over 60"** | 144" | 72" | 72" | NA | 42" | 72" | 60" | 120" | 78" | 144" | 90" | NA |
| 3% Sheerweave 5000 | 98" | NO | NO | Non-Railroaded | | | | | | | | | | | | |
| *(R07_R11, R89, R90, R93, U10, U11)* | | | | **Maximum Width** | **98"**** | **88"** | **88"** | **NA** | **96"** | **96"** | **96"** | **98"**** | **98"**** | **98"**** | **98"**** | **98"**** |
| | | | | **R Series clutch - max width -96" | Maximum Height | | | | | | | | | Maximum Height | | |
| | | | | **For Shade Widths to 60"** | 144" | 96" | 96" | NA | 66" | 96" | 84" | 144" | 134" | NA | NA | NA |
| | | | | **For Shade Widths over 60"** | 144" | 78" | 78" | NA | 48" | 78" | 72" | 138" | 84" | 144" | 102" | NA |
| 3% T Screen | 98" | YES | YES | Non-Railroaded | | | | | | | | | | | | |
| | | | | **Maximum Width** | **98"** | **90"** | **90"** | **84"** | **96"** | **96"** | **96"** | **98"** | **98"** | **98"** | **98"** | **98"** |
| | | | | | Maximum Height | | | | | | | | | Maximum Height | | |
| | | | | **For Shade Widths to 84"** | 144" | 144" | 144" | 54" | 114" | 144" | 144" | 144" | 144" | 144" | 144" | 114" |
| | | | | **For Shade Widths to 90"** | 144" | 138" | 138" | NA | 114" | 138" | 138" | 144" | 144" | 144" | 144" | 114" |
| | | | | **For Shade Widths over 90"** | 144" | NA | NA | NA | 108" | 108" | 108" | 144" | 144" | 144" | 144" | 114" |
| | | | | Railroaded | | | | | | | | | | | | |
| | | | | **Maximum Width** | **120"** | **108"** | **108"** | **84"** | **108"** | **108"** | **108"** | **120"** | **120"** | **120"** | **120"** | **120"** |
| | | | | | Maximum Height | | | | | | | | | Maximum Height | | |
| | | | | **For Shade Widths to 84"** | 144" | 144" | 144" | 54" | 114" | 144" | 144" | 144" | 144" | 144" | 144" | 114" |
| | | | | **For Shade Widths to 90"** | 144" | 138" | 138" | NA | 114" | 138" | 138" | 144" | 144" | 144" | 144" | 114" |
| | | | | **For Shade Widths to 98"** | 144" | 108" | 108" | NA | 108" | 108" | 108" | 144" | 144" | 144" | 144" | 114" |
| | | | | **For Shade Widths over 98"** | 120" | 66" | 66" | NA | 66" | 66" | 66" | 120" | 120" | 120" | 120" | 114" |
| 4% S Screen | 122" | NO | NO | Non-Railroaded | | | | | | | | | | | | |
| | | | | **Maximum Width** | **122"**** | **108"**** | **108"**** | **84"** | **108"**** | **108"**** | **108"**** | **122"**** | **122"**** | **122"**** | **122"**** | **122"**** |
| | | | | **R Series clutch - max width - 96" | Maximum Height | | | | | | | | | Maximum Height | | |
| | | | | **For Shade Widths to 66"** | 144" | 120" | 120" | 40" | 96" | 120" | 114" | 144" | 144" | NA | NA | NA |
| | | | | **For Shade Widths to 72"** | 144" | 120" | 120" | 40" | 84" | 120" | 102" | 144" | 144" | NA | NA | NA |
| | | | | **For Shade Widths to 84"** | 144" | 120" | 120" | 40" | 72" | 120" | 102" | 144" | 126" | 144" | 144" | 80" |
| | | | | **For Shade Widths to 90"** | 144" | 96" | 96" | NA | 72" | 96" | 96" | 144" | 126" | 144" | 144" | 80" |
| | | | | **For Shade Widths to 96"** | 144" | 78" | 78" | NA | 72" | 78" | 78" | 144" | 126" | 144" | 144" | 80" |
| | | | | **For Shade Widths to 102"** | 144" | 60" | 60" | NA | 60" | 60" | 60" | 144" | 126" | 144" | 144" | 80" |
| | | | | **For Shade Widths over 102"** | 144" | 48" | 48" | NA | 48" | 48" | 48" | 144" | 90" | 144" | 144" | 80" |
| 4% Silver Screen | 94" | YES | YES | Non-Railroaded | | | | | | | | | | | | |
| | | | | **Maximum Width** | **94"** | **84"** | **84"** | **90"** | **94"** | **94"** | **94"** | **94"** | **94"** | **94"** | **94"** | **94"** |
| | | | | | Maximum Height | | | | | | | | | Maximum Height | | |
| | | | | **For Shade Widths to 78"** | 144" | 144" | 144" | 78" | 144" | 144" | 144" | 144" | 144" | NA | NA | NA |
| | | | | **For Shade Widths to 84"** | 144" | 144" | 144" | 60" | 144" | 144" | 144" | 144" | 144" | 144" | 144" | 144" |
| | | | | **For Shade Widths to 90"** | 144" | NA | NA | 42" | 138" | 144" | 138" | 144" | 144" | 144" | 144" | 144" |
| | | | | **For Shade Widths over 90"** | 144" | NA | NA | NA | 108" | 144" | 132" | 144" | 144" | 144" | 144" | 144" |
| | | | | Railroaded | | | | | | | | | | | | |
| | | | | **Maximum Width** | **144"**** | **120"** | **120"** | **90"** | **120"** | **120"** | **120"** | **144"**** | **144"**** | **144"**** | **144"**** | **144"**** |
| | | | | **R Series clutch - max width - 120" | Maximum Height | | | | | | | | | Maximum Height | | |
| | | | | **For Shade Widths to 78"** | 144" | 144" | 144" | 78" | 144" | 144" | 144" | 144" | 144" | NA | NA | NA |
| | | | | **For Shade Widths to 84"** | 144" | 144" | 144" | 60" | 144" | 144" | 144" | 144" | 144" | 144" | 144" | 144" |
| | | | | **For Shade Widths to 90"** | 144" | 144" | 144" | 42" | 138" | 144" | 138" | 144" | 144" | 144" | 144" | 144" |
| | | | | **For Shade Widths to 94"** | 144" | 144" | 144" | NA | 108" | 144" | 132" | 144" | 144" | 144" | 144" | 144" |
| | | | | **For Shade Widths over 94"** | 144" | 144" | 144" | NA | 72" | 144" | 132" | 144" | 144" | 144" | 144" | 144" |
| 5% E Screen | 122" | YES | YES | Non-Railroaded | | | | | | | | | | | | |
| | | | | **Maximum Width** | **122"**** | **112"** | **112"** | **90"** | **120"** | **120"** | **120"** | **122"**** | **122"**** | **122"**** | **122"**** | **122"**** |
| | | | | **R Series clutch - max width - 120" | Maximum Height | | | | | | | | | Maximum Height | | |
| | | | | **For Shade Widths to 72"** | 144" | 144" | 144" | 90" | 144" | 144" | 144" | 144" | 144" | NA | NA | NA |
| | | | | **For Shade Widths to 78"** | 144" | 144" | 144" | 84" | 144" | 144" | 144" | 144" | 144" | NA | NA | NA |
| | | | | **For Shade Widths to 84"** | 144" | 144" | 144" | 60" | 144" | 144" | 144" | 144" | 144" | 144" | 144" | 144" |
| | | | | **For Shade Widths to 90"** | 144" | 144" | 144" | 42" | 138" | 144" | 144" | 144" | 144" | 144" | 144" | 144" |
| | | | | **For Shade Widths over 90"** | 144" | 144" | 144" | NA | 84" | 144" | 144" | 144" | 144" | 144" | 144" | 144" |
| | | | | Railroaded | | | | | | | | | | | | |
| | | | | **Maximum Width** | **144"**** | **120"** | **120"** | **90"** | **120"** | **120"** | **120"** | **144"**** | **144"**** | **144"**** | **144"**** | **144"**** |
| | | | | **R Series clutch - max width - 120" | Maximum Height | | | | | | | | | Maximum Height | | |
| | | | | **For Shade Widths to 72"** | 144" | 144" | 144" | 90" | 144" | 144" | 144" | 144" | 144" | NA | NA | NA |
| | | | | **For Shade Widths to 78"** | 144" | 144" | 144" | 84" | 144" | 144" | 144" | 144" | 144" | NA | NA | NA |
| | | | | **For Shade Widths to 84"** | 144" | 144" | 144" | 60" | 144" | 144" | 144" | 144" | 144" | 144" | 144" | 144" |
| | | | | **For Shade Widths to 90"** | 144" | 144" | 144" | 42" | 138" | 144" | 144" | 144" | 144" | 144" | 144" | 144" |
| | | | | **For Shade Widths to 120"** | 144" | 144" | 144" | NA | 84" | 144" | 144" | 144" | 144" | 144" | 144" | 144" |
| | | | | **For Shade Widths over 120"** | 144" | NA | NA | NA | NA | NA | NA | 144" | 144" | 144" | 144" | 144" |

# PRODUCT SIZE SPECIFICATIONS – CLUTCH LIFT

**Minimum and Maximum Standards**
**For shades 12" wide, maximum length is 60"**
**All Patterns – Minimum Width: 12"  Minimum Height: 12".**
**Spring Assist strongly recommended on shade sizes over 80" x 80".**
**For TouchLift Cordless specifications, please refer to Product Specifications – Touch Lift section.**

Please Note:  Shade sizes that are wider than the fabric roll width indicated will be made with the fabric turned width for length (railroaded). The maximum width for non-railroaded shades is the roll width unless otherwise noted.

Fabrics turned width for length will have a visible seam when fabricated longer than their maximum roll width less 10".
Fabrics turned width for length may have an edge curl.  This is not considered a defect in the product.

| Material Name | Roll Width | Railroad Option | Splice/ Seam | | Standard Clutch | Fabric Valance | Deluxe Valance | Small Cassette | Medium Cassette | Large Cassette | 3" Fascia | 4" Fascia | Pocket Headrail | Spring Assist Clutch Standard Shade | Spring Assist Clutch 4" Fascia | Spring Assist Clutch Pocket |
|---|---|---|---|---|---|---|---|---|---|---|---|---|---|---|---|---|
| 5% M Screen Deco | 98" | YES | YES | Non-Railroaded | | | | | | | | | | | | |
| | | | | Maximum Width | 98" | 90" | 90" | 90" | 98" | 98" | 98" | 98" | 98" | 98" | 98" | 98" |
| | | | | | Maximum Height | | | | | | | | | Maximum Height | | |
| | | | | For Shade Widths to 78" | 144" | 144" | 144" | 60" | 120" | 144" | 144" | 144" | 144" | NA | NA | NA |
| | | | | For Shade Widths to 84" | 144" | 144" | 144" | 60" | 120" | 144" | 144" | 144" | 144" | 144" | 144" | 130" |
| | | | | For Shade Widths to 90" | 144" | 138" | 138" | 48" | 120" | 138" | 138" | 144" | 144" | 144" | 144" | 130" |
| | | | | For Shade Widths over 90" | 144" | NA | NA | NA | 84" | 126" | 102" | 144" | 144" | 144" | 144" | 130" |
| | | | | Railroaded | | | | | | | | | | | | |
| | | | | Maximum Width | 144"** | 120" | 120" | 90" | 120" | 120" | 120" | 144"** | 144"** | 144"** | 144"** | 144"** |
| | | | | **R Series clutch - max width - 120" | Maximum Height | | | | | | | | | Maximum Height | | |
| | | | | For Shade Widths to 78" | 144" | 144" | 144" | 60" | 120" | 144" | 144" | 144" | 144" | NA | NA | NA |
| | | | | For Shade Widths to 84" | 144" | 144" | 144" | 60" | 120" | 144" | 144" | 144" | 144" | 144" | 144" | 130" |
| | | | | For Shade Widths to 90" | 144" | 138" | 138" | 48" | 120" | 138" | 138" | 144" | 144" | 144" | 144" | 130" |
| | | | | For Shade Widths to 98" | 144" | 126" | 126" | NA | 84" | 126" | 102" | 144" | 144" | 144" | 144" | 130" |
| | | | | For Shade Widths over 98" | 144" | 126" | 126" | NA | 60" | 126" | 102" | 144" | 126" | 144" | 144" | 130" |
| 5% Sheerweave 2000 | 126" | YES | YES | Non-Railroaded | | | | | | | | | | | | |
| | | | | Maximum Width | 126"** | 108"** | 108"** | 84" | 108"** | 108"** | 108"** | 126"** | 126"** | 126"** | 126"** | 126"** |
| | | | | **R Series clutch - max width - 96" | Maximum Height | | | | | | | | | Maximum Height | | |
| | | | | For Shade Widths to 66" | 144" | 144" | 144" | 66" | 132" | 144" | 144" | 144" | 144" | NA | NA | NA |
| | | | | For Shade Widths to 72" | 144" | 144" | 144" | 66" | 132" | 144" | 144" | 144" | 144" | NA | NA | NA |
| | | | | For Shade Widths to 84" | 144" | 132" | 132" | 42" | 126" | 132" | 126" | 144" | 144" | 144" | 144" | 138" |
| | | | | For Shade Widths to 90" | 144" | 132" | 132" | NA | 96" | 132" | 108" | 144" | 144" | 144" | 144" | 138" |
| | | | | For Shade Widths to 96" | 144" | 132" | 132" | NA | 78" | 132" | 108" | 144" | 144" | 144" | 144" | 138" |
| | | | | For Shade Widths to 102" | 144" | 60" | 60" | NA | 60" | 60" | 108" | 144" | 144" | 144" | 144" | 138" |
| | | | | For Shade Widths over 102" | 144" | 48" | 48" | NA | 48" | 48" | 108" | 144" | 138" | 144" | 144" | 138" |
| | | | | Railroaded | | | | | | | | | | | | |
| | | | | Maximum Width | 120"** | 108"** | 108"** | 84" | 108"** | 108"** | 108"** | 120"** | 120"** | 120"** | 120"** | 120"** |
| | | | | **R Series clutch - max width - 96" | Maximum Height | | | | | | | | | Maximum Height | | |
| | | | | For Shade Widths to 66" | 120" | 120" | 120" | 66" | 120" | 120" | 120" | 120" | 120" | NA | NA | NA |
| | | | | For Shade Widths to 72" | 120" | 120" | 120" | 66" | 120" | 120" | 120" | 120" | 120" | NA | NA | NA |
| | | | | For Shade Widths to 84" | 120" | 120" | 120" | 42" | 120" | 120" | 120" | 120" | 120" | 120" | 120" | 120" |
| | | | | For Shade Widths to 90" | 120" | 120" | 120" | NA | 96" | 120" | 102" | 120" | 120" | 120" | 120" | 120" |
| | | | | For Shade Widths to 96" | 120" | 120" | 120" | NA | 78" | 120" | 102" | 120" | 120" | 120" | 120" | 120" |
| | | | | For Shade Widths to 102" | 120" | 60" | 60" | NA | 60" | 60" | 102" | 120" | 120" | 120" | 120" | 120" |
| | | | | For Shade Widths over 102" | 120" | 48" | 48" | NA | 48" | 48" | 102" | 120" | 120" | 120" | 120" | 120" |
| 5% Sheerweave 2390 | 126" | YES | YES | Non-Railroaded | | | | | | | | | | | | |
| | | | | Maximum Width | 126"** | 116" | 116" | 102" | 102" | 120" | 120" | 126"** | 126"** | 126"** | 126"** | 126"** |
| | | | | **R Series clutch - max width - 120" | Maximum Height | | | | | | | | | Maximum Height | | |
| | | | | For Shade Widths to 72" | 144" | 144" | 144" | 90" | 144" | 144" | 144" | 144" | 144" | NA | NA | NA |
| | | | | For Shade Widths to 78" | 144" | 144" | 144" | 84" | 144" | 144" | 144" | 144" | 144" | NA | NA | NA |
| | | | | For Shade Widths to 84" | 144" | 144" | 144" | 60" | 144" | 144" | 144" | 144" | 144" | 144" | 144" | 144" |
| | | | | For Shade Widths to 90" | 144" | 144" | 144" | 42" | 132" | 144" | 144" | 144" | 144" | 144" | 144" | 144" |
| | | | | For Shade Widths over 90" | 144" | 144" | 144" | 42" | 84" | 144" | 144" | 144" | 144" | 144" | 144" | 144" |
| | | | | Railroaded | | | | | | | | | | | | |
| | | | | Maximum Width | 144"** | 120" | 120" | 102" | 102" | 120" | 120" | 144"** | 144"** | 144"** | 144"** | 144"** |
| | | | | **R Series clutch - max width - 120" | Maximum Height | | | | | | | | | Maximum Height | | |
| | | | | For Shade Widths to 72" | 144" | 144" | 144" | 90" | 144" | 144" | 144" | 144" | 144" | NA | NA | NA |
| | | | | For Shade Widths to 78" | 144" | 144" | 144" | 84" | 144" | 144" | 144" | 144" | 144" | NA | NA | NA |
| | | | | For Shade Widths to 84" | 144" | 144" | 144" | 60" | 144" | 144" | 144" | 144" | 144" | 144" | 144" | 144" |
| | | | | For Shade Widths to 90" | 144" | 144" | 144" | 42" | 132" | 144" | 144" | 144" | 144" | 144" | 144" | 144" |
| | | | | For Shade Widths to 126" | 144" | 144" | 144" | 42" | 84" | 144" | 144" | 144" | 144" | 144" | 144" | 144" |
| | | | | For Shade Widths over 126" | 144" | NA | NA | NA | NA | NA | NA | 144" | 144" | 144" | 144" | 144" |
| 5% Sheerweave 2705 | 126" | NO | NO | Non-Railroaded | | | | | | | | | | | | |
| | | | | Maximum Width | 98" | NA | 98" | 90" | 98" | 98" | 98" | 98" | 98" | 98" | 98" | 98" |
| | | | | **R Series clutch - max width - 98" | Maximum Height | | | | | | | | | Maximum Height | | |
| | | | | For Shade Widths to 66" | 120" | NA | 120" | 48" | 120" | 120" | 120" | 120" | 120" | N/A | NA | NA |
| | | | | For Shade Widths to 72" | 120" | NA | 120" | 48" | 114" | 120" | 120" | 120" | 120" | NA | NA | NA |
| | | | | For Shade Widths to 78" | 120" | NA | 120" | 48" | 102" | 120" | 120" | 120" | 120" | NA | NA | NA |
| | | | | For Shade Widths to 84" | 120" | NA | 120" | 48" | 102" | 120" | 120" | 120" | 120" | 120" | 120" | 102" |
| | | | | For Shade Widths to 90" | 120" | NA | 120" | 42" | 102" | 120" | 120" | 120" | 120" | 120" | 120" | 102" |
| | | | | For Shade Widths over 90" | 120" | NA | 102" | NA | 84" | 102" | 84" | 120" | 120" | 120" | 120" | 102" |

# PRODUCT SIZE SPECIFICATIONS – CLUTCH LIFT

**Minimum and Maximum Standards**
**For shades 12" wide, maximum length is 60"**
**All Patterns – Minimum Width: 12"  Minimum Height: 12".**
**Spring Assist strongly recommended on shade sizes over 80" x 80".**
**For TouchLift Cordless specifications, please refer to Product Specifications – Touch Lift section.**

Please Note:  Shade sizes that are wider than the fabric roll width indicated will be made with the fabric turned width for length (railroaded). The maximum width for non-railroaded shades is the roll width unless otherwise noted.

Fabrics turned width for length will have a visible seam when fabricated longer than their maximum roll width less 10".
Fabrics turned width for length may have an edge curl.  This is not considered a defect in the product.

| Material Name | Roll Width | Railroad Option | Splice/ Seam | | Standard Clutch | Fabric Valance | Deluxe Valance | Small Cassette | Medium Cassette | Large Cassette | 3" Fascia | 4" Fascia | Pocket Headrail | Spring Assist Clutch Standard Shade | Spring Assist Clutch 4" Fascia | Spring Assist Clutch Pocket |
|---|---|---|---|---|---|---|---|---|---|---|---|---|---|---|---|---|
| 5% Sheerweave 4000 | 126" | YES | YES | **Non-Railroaded** | | | | | | | | | | | | |
| | | | | **Maximum Width** | 126"** | 102"** | 102"** | 84" | 102"** | 102"** | 102"** | 126"** | 126"** | 126"** | 126"** | 126"** |
| | | | | **R Series clutch - max width - 96" | Maximum Height | | | | | | | | | Maximum Height | | |
| | | | | **For Shade Widths to 66"** | 144" | 138" | 138" | 42" | 114" | 138" | 120" | 144" | 144" | NA | NA | NA |
| | | | | **For Shade Widths to 72"** | 144" | 138" | 138" | 42" | 90" | 138" | 120" | 144" | 144" | NA | NA | NA |
| | | | | **For Shade Widths to 84"** | 144" | 126" | 126" | 42" | 90" | 126" | 120" | 144" | 144" | 144" | 144" | 90" |
| | | | | **For Shade Widths to 90"** | 144" | 96" | 96" | NA | 90" | 96" | 96" | 144" | 144" | 144" | 144" | 90" |
| | | | | **For Shade Widths to 96"** | 144" | 90" | 90" | NA | 78" | 90" | 78" | 144" | 144" | 144" | 144" | 90" |
| | | | | **For Shade Widths to 102"** | 144" | 60" | 60" | NA | 60" | 60" | 60" | 144" | 144" | 144" | 144" | 90" |
| | | | | **For Shade Widths over 102"** | 144" | NA | NA | NA | NA | NA | NA | 144" | 90" | 144" | 144" | 90" |
| | | | | **Railroaded** | | | | | | | | | | | | |
| | | | | **Maximum Width** | 144"** | 102"** | 102"** | 84" | 102"** | 102"** | 102"** | 144"** | 144"** | 144"** | 144"** | 144"** |
| | | | | **R Series clutch - max width - 96" | Maximum Height | | | | | | | | | Maximum Height | | |
| | | | | **For Shade Widths to 66"** | 144" | 138" | 138" | 42" | 114" | 138" | 120" | 144" | 144" | NA | NA | NA |
| | | | | **For Shade Widths to 72"** | 144" | 138" | 138" | 42" | 90" | 138" | 120" | 144" | 144" | NA | NA | NA |
| | | | | **For Shade Widths to 84"** | 144" | 126" | 126" | 42" | 90" | 126" | 120" | 144" | 144" | 144" | 144" | 90" |
| | | | | **For Shade Widths to 90"** | 144" | 96" | 96" | NA | 90" | 96" | 96" | 144" | 144" | 144" | 144" | 90" |
| | | | | **For Shade Widths to 96"** | 144" | 90" | 90" | NA | 78" | 90" | 78" | 144" | 144" | 144" | 144" | 90" |
| | | | | **For Shade Widths to 102"** | 144" | 60" | 60" | NA | 60" | 60" | 60" | 144" | 144" | 144" | 144" | 90" |
| | | | | **For Shade Widths over 102"** | 144" | NA | NA | NA | NA | NA | NA | 144" | 90" | 144" | 144" | 90" |
| 5% Sheerweave 4500 | 126" | YES | YES | **Non-Railroaded** | | | | | | | | | | | | |
| | | | | **Maximum Width** | 126"** | 108"** | 108"** | 84" | 108"** | 108"** | 126"** | 126"** | 126"** | 126"** | 126"** | 126"** |
| | | | | **R Series clutch - max width - 96" | Maximum Height | | | | | | | | | Maximum Height | | |
| | | | | **For Shade Widths to 66"** | 144" | 144" | 144" | 54" | 114" | 144" | 144" | 144" | 144" | NA | NA | NA |
| | | | | **For Shade Widths to 72"** | 144" | 144" | 144" | 54" | 108" | 144" | 144" | 144" | 144" | NA | NA | NA |
| | | | | **For Shade Widths to 84"** | 144" | 126" | 126" | 42" | 108" | 126" | 126" | 144" | 144" | 144" | 144" | 108" |
| | | | | **For Shade Widths to 90"** | 144" | 108" | 108" | NA | 96" | 108" | 96" | 144" | 144" | 144" | 144" | 108" |
| | | | | **For Shade Widths to 96"** | 144" | 108" | 108" | NA | 78" | 108" | 90" | 144" | 144" | 144" | 144" | 108" |
| | | | | **For Shade Widths to 102"** | 144" | 60" | 60" | NA | 60" | 60" | 90" | 144" | 144" | 144" | 144" | 108" |
| | | | | **For Shade Widths over 102"** | 144" | 48" | 48" | NA | 48" | 48" | 90" | 144" | 108" | 144" | 144" | 108" |
| | | | | **Railroaded** | | | | | | | | | | | | |
| | | | | **Maximum Width** | 120"** | 108"** | 108"** | 84" | 108"** | 108"** | 120"** | 120"** | 120"** | 120"** | 120"** | 120"** |
| | | | | **R Series clutch - max width - 96" | Maximum Height | | | | | | | | | Maximum Height | | |
| | | | | **For Shade Widths to 66"** | 144" | 144" | 144" | 54" | 114" | 144" | 144" | 144" | 144" | NA | NA | NA |
| | | | | **For Shade Widths to 72"** | 144" | 144" | 144" | 54" | 108" | 144" | 144" | 144" | 144" | NA | NA | NA |
| | | | | **For Shade Widths to 84"** | 144" | 126" | 126" | 42" | 108" | 126" | 126" | 144" | 144" | 144" | 144" | 108" |
| | | | | **For Shade Widths to 90"** | 144" | 108" | 108" | NA | 96" | 108" | 96" | 144" | 144" | 144" | 144" | 108" |
| | | | | **For Shade Widths to 96"** | 144" | 108" | 108" | NA | 78" | 108" | 90" | 144" | 144" | 144" | 144" | 108" |
| | | | | **For Shade Widths to 102"** | 144" | 60" | 60" | NA | 60" | 60" | 90" | 144" | 144" | 144" | 144" | 108" |
| | | | | **For Shade Widths over 102"** | 144" | 48" | 48" | NA | 48" | 48" | 90" | 144" | 108" | 144" | 144" | 108" |
| 5% Sheerweave 5000 *(R10_01, 03, 06, 07, 09, 10, 11, 12, 13,14, 15, 16, 17, 18, 19, 20, 21)* | 98" | NO | NO | **Non-Railroaded** | | | | | | | | | | | | |
| | | | | **Maximum Width** | 98"** | 88" | 88" | NA | 96" | 96" | 96" | 98"** | 98"** | 98"** | 98"** | 98"** |
| | | | | **R Series clutch - max width - 96" | Maximum Height | | | | | | | | | Maximum Height | | |
| | | | | **For Shade Widths to 60"** | 144" | 102" | 102" | NA | 72" | 102" | 96" | 144" | 144" | NA | NA | NA |
| | | | | **For Shade Widths to 66"** | 144" | 102" | 102" | NA | 72" | 102" | 96" | 144" | 126" | NA | NA | NA |
| | | | | **For Shade Widths to 72"** | 144" | 90" | 90" | NA | 72" | 90" | 84" | 144" | 126" | NA | NA | NA |
| | | | | **For Shade Widths to 78"** | 144" | 90" | 90" | NA | 60" | 90" | 78" | 144" | 126" | NA | NA | NA |
| | | | | **For Shade Widths to 84"** | 144" | 90" | 90" | NA | 54" | 90" | 78" | 144" | 126" | 144" | 114" | NA |
| | | | | **For Shade Widths to 88"** | 144" | 90" | 90" | NA | 54" | 90" | 78" | 144" | 96" | 144" | 114" | NA |
| | | | | **For Shade Widths to 90"** | 144" | N/A | N/A | NA | 54" | 90" | 78" | 144" | 96" | 144" | 114" | NA |
| | | | | **For Shade Widths to 96"** | 144" | N/A | N/A | NA | 54" | 78" | 78" | 144" | 96" | 144" | 114" | NA |
| | | | | **For Shade Widths over 96"** | 144" | N/A | N/A | NA | NA | N/A | NA | 144" | 96" | 144" | 114" | NA |
| 5% Sheerweave 5000 *(R10_Q51, S77, S84)* | 98" | NO | NO | **Non-Railroaded** | | | | | | | | | | | | |
| | | | | **Maximum Width** | 98"** | 88" | 88" | NA | 98"** | 98"** | 98"** | 98"** | 98"** | 98"** | 98"** | 98"** |
| | | | | **R Series clutch - max width - 96" | Maximum Height | | | | | | | | | Maximum Height | | |
| | | | | **For Shade Widths to 60"** | 144" | 108" | 108" | NA | 72" | 108" | 96" | 144" | 144" | NA | NA | NA |
| | | | | **For Shade Widths to 66"** | 144" | 108" | 108" | NA | 72" | 108" | 96" | 144" | 126" | NA | NA | NA |
| | | | | **For Shade Widths to 72"** | 144" | 90" | 90" | NA | 72" | 90" | 84" | 144" | 126" | NA | NA | NA |
| | | | | **For Shade Widths to 78"** | 144" | 90" | 90" | NA | 60" | 90" | 78" | 144" | 126" | NA | NA | NA |
| | | | | **For Shade Widths to 84"** | 144" | 90" | 90" | NA | 54" | 90" | 78" | 144" | 126" | 144" | 114" | NA |
| | | | | **For Shade Widths to 88"** | 144" | 90" | 90" | NA | 54" | 90" | 78" | 144" | 96" | 144" | 114" | NA |
| | | | | **For Shade Widths to 90"** | 144" | N/A | N/A | NA | 54" | 90" | 78" | 144" | 96" | 144" | 114" | NA |
| | | | | **For Shade Widths to 96"** | 144" | N/A | N/A | NA | 54" | 78" | 78" | 144" | 96" | 144" | 114" | NA |
| | | | | **For Shade Widths over 96"** | 144" | N/A | N/A | NA | 54" | 60" | 60" | 144" | 96" | 144" | 114" | NA |
| 5% Sheerweave 5000 *(R10_Q43, S82)* | 98" | NO | NO | **Non-Railroaded** | | | | | | | | | | | | |
| | | | | **Maximum Width** | 98"** | 88" | 88" | NA | 98"** | 98"** | 98"** | 98"** | 98"** | 98"** | 98"** | 98"** |
| | | | | **R Series clutch - max width - 96" | Maximum Height | | | | | | | | | Maximum Height | | |
| | | | | **For Shade Widths to 60"** | 144" | 126" | 126" | NA | 84" | 126" | 108" | 144" | 144" | NA | NA | NA |
| | | | | **For Shade Widths to 66"** | 144" | 114" | 114" | NA | 84" | 114" | 108" | 144" | 144" | NA | NA | NA |
| | | | | **For Shade Widths to 72"** | 144" | 102" | 102" | NA | 84" | 102" | 90" | 144" | 144" | NA | NA | NA |
| | | | | **For Shade Widths to 78"** | 144" | 102" | 102" | NA | 66" | 102" | 90" | 144" | 144" | NA | NA | NA |
| | | | | **For Shade Widths to 84"** | 144" | 102" | 102" | NA | 66" | 102" | 90" | 144" | 126" | 144" | 138" | NA |
| | | | | **For Shade Widths to 88"** | 144" | 96" | 96" | NA | 66" | 96" | 90" | 144" | 114" | 144" | 138" | NA |
| | | | | **For Shade Widths to 90"** | 144" | N/A | N/A | NA | 66" | 96" | 90" | 144" | 114" | 144" | 138" | NA |
| | | | | **For Shade Widths to 96"** | 144" | N/A | N/A | NA | 66" | 78" | 78" | 144" | 114" | 144" | 138" | 66" |
| | | | | **For Shade Widths over 96"** | 144" | N/A | N/A | NA | 60" | 60" | 60" | 144" | 114" | 144" | 138" | 66" |

# PRODUCT SIZE SPECIFICATIONS – CLUTCH LIFT

**Minimum and Maximum Standards**
**For shades 12" wide, maximum length is 60"**
**All Patterns – Minimum Width: 12"  Minimum Height: 12".**
**Spring Assist strongly recommended on shade sizes over 80" x 80".**
**For TouchLift Cordless specifications, please refer to Product Specifications – Touch Lift section.**

Please Note:  Shade sizes that are wider than the fabric roll width indicated will be made with the fabric turned width for length (railroaded). The maximum width for non-railroaded shades is the roll width unless otherwise noted.

Fabrics turned width for length will have a visible seam when fabricated longer than their maximum roll width less 10".
Fabrics turned width for length may have an edge curl.  This is not considered a defect in the product.

| Material Name | Roll Width | Railroad Option | Splice/ Seam | | Standard Clutch | Fabric Valance | Deluxe Valance | Small Cassette | Medium Cassette | Large Cassette | 3" Fascia | 4" Fascia | Pocket Headrail | Spring Assist Clutch Standard Shade | Spring Assist Clutch 4" Fascia | Spring Assist Clutch Pocket |
|---|---|---|---|---|---|---|---|---|---|---|---|---|---|---|---|---|
| 7% Global Screen | 118" | YES | YES | Non-Railroaded | | | | | | | | | | | | |
| | | | | Maximum Width | 118" | 108" | 108" | 90" | 118" | 118" | 118" | 118" | 118" | 118" | 118" | 118" |
| | | | | | Maximum Height | | | | | | | | | Maximum Height | | |
| | | | | For Shade Widths to 78" | 144" | 144" | 144" | 66" | 126" | 144 | 144 | 144" | 144" | NA | NA | NA |
| | | | | For Shade Widths to 84" | 144" | 144" | 144" | 60" | 126" | 144 | 144 | 144" | 144" | 144" | 144" | 132" |
| | | | | For Shade Widths to 90" | 144" | 138" | 138" | 42" | 126" | 138" | 138" | 144" | 144" | 144" | 144" | 132" |
| | | | | For Shade Widths over 90" | 144" | 132" | 132" | NA | 60" | 132" | 108" | 144" | 144" | 144" | 144" | 132" |
| | | | | Railroaded | | | | | | | | | | | | |
| | | | | Maximum Width | 144"** | 120" | 120" | 90" | 120" | 120" | 120" | 144"** | 144"** | 144"** | 144"** | 144"** |
| | | | | **R Series clutch - max width - 120" | Maximum Height | | | | | | | | | Maximum Height | | |
| | | | | For Shade Widths to 78" | 144" | 144" | 144" | 66" | 126" | 144 | 144 | 144" | 144" | NA | NA | NA |
| | | | | For Shade Widths to 84" | 144" | 144" | 144" | 60" | 126" | 144 | 144 | 144" | 144" | 144" | 144" | 132" |
| | | | | For Shade Widths to 90" | 144" | 138" | 138" | 42" | 126" | 138" | 138" | 144" | 144" | 144" | 144" | 132" |
| | | | | For Shade Widths to 118" | 144" | 132" | 132" | NA | 60" | 132" | 108" | 144" | 144" | 144" | 144" | 132" |
| | | | | For Shade Widths over 118" | 144" | 132" | 132" | NA | 60" | 132" | 108" | 144" | 132" | 144" | 144" | 132" |
| 7% Sheerweave 5000 *(R34_Q46)* | 98" | NO | NO | Non-Railroaded | | | | | | | | | | | | |
| | | | | Maximum Width | 98"** | 90" | 90" | NA | 96" | 96" | 96" | 98"** | 98"** | 98"** | 98"** | 98"** |
| | | | | **R Series clutch - max width - 96" | Maximum Height | | | | | | | | | Maximum Height | | |
| | | | | For Shade Widths to 60" | 144" | 102" | 102" | NA | 66" | 102" | 102" | 120" | 120" | NA | NA | NA |
| | | | | For Shade Widths over 60" | 144" | 78" | 78" | NA | 54" | 78" | 78" | 120" | 90" | 144" | 120" | 90" |
| 7% Sheerweave 5000 *(R34_08, 09)* | 98" | NO | NO | Non-Railroaded | | | | | | | | | | | | |
| | | | | Maximum Width | 98"** | 88" | 88" | 84" | 98"** | 98"** | 98"** | 98"** | 98"** | 98"** | 98"** | 98"** |
| | | | | **R Series clutch - max width - 96" | Maximum Height | | | | | | | | | Maximum Height | | |
| | | | | For Shade Widths to 60" | 144" | 144" | 144" | 42" | 102" | 144" | 132" | 144" | 144" | NA | NA | NA |
| | | | | For Shade Widths to 66" | 144" | 126" | 126" | 42" | 102" | 126" | 114" | 144" | 144" | NA | NA | NA |
| | | | | For Shade Widths to 78" | 144" | 126" | 126" | 42" | 84" | 126" | 108" | 144" | 144" | NA | NA | NA |
| | | | | For Shade Widths to 84" | 144" | 126" | 126" | 42" | 84" | 126" | 108" | 144" | 138" | 144" | 144" | 84" |
| | | | | For Shade Widths to 88" | 144" | 96" | 96" | NA | 84" | 96" | 96" | 144" | 138" | 144" | 144" | 84" |
| | | | | For Shade Widths to 90" | 144" | NA | NA | NA | 84" | 96" | 96" | 144" | 138" | 144" | 144" | 84" |
| | | | | For Shade Widths to 96" | 144" | NA | N/A | NA | 78" | 78" | 78" | 144" | 138" | 144" | 144" | 84" |
| | | | | For Shade Widths over 96" | 144" | NA | N/A | NA | 60" | 60" | 60" | 144" | 138" | 144" | 144" | 84" |
| 7% Sheerweave 5000 *(R34_S73)* | 98" | NO | NO | Non-Railroaded | | | | | | | | | | | | |
| | | | | Maximum Width | 98"** | 88" | 88" | NA | 98"** | 98"** | 98"** | 98"** | 98"** | 98"** | 98"** | 98"** |
| | | | | **R Series clutch - max width - 96" | Maximum Height | | | | | | | | | Maximum Height | | |
| | | | | For Shade Widths to 60" | 144" | 114" | 114" | NA | 78" | 114" | 102" | 144" | 144" | NA | NA | NA |
| | | | | For Shade Widths to 66" | 144" | 114" | 114" | NA | 78" | 114" | 102" | 144" | 138" | NA | NA | NA |
| | | | | For Shade Widths to 78" | 144" | 96" | 96" | NA | 60" | 96" | 84" | 144" | 138" | NA | NA | NA |
| | | | | For Shade Widths to 84" | 144" | 96" | 96" | NA | 60" | 96" | 84" | 144" | 126" | 144" | 144" | NA |
| | | | | For Shade Widths to 88" | 144" | 96" | 96" | NA | 60" | 96" | 84" | 144" | 102" | 144" | 126" | NA |
| | | | | For Shade Widths to 90" | 144" | 96" | 96" | NA | 60" | 96" | 84" | 144" | 102" | 144" | 126" | NA |
| | | | | For Shade Widths to 96" | 144" | NA | N/A | NA | 60" | 78" | 78" | 144" | 102" | 144" | 126" | NA |
| | | | | For Shade Widths over 96" | 144" | NA | N/A | NA | 60" | 60" | 60" | 144" | 102" | 144" | 126" | NA |
| 10% E Screen | 122" | YES | YES | Non-Railroaded | | | | | | | | | | | | |
| | | | | Maximum Width | 122"** | 112" | 112" | 84" | 108" | 120" | 120" | 122"** | 122"** | 122"** | 122"** | 122"** |
| | | | | | Maximum Height | | | | | | | | | Maximum Height | | |
| | | | | For Shade Widths to 78" | 144" | 144" | 144" | 72" | 138" | 144" | 144" | 144" | 144" | NA | NA | NA |
| | | | | For Shade Widths to 84" | 144" | 144" | 144" | 60" | 138" | 144" | 144" | 144" | 144" | 144" | 144" | 144" |
| | | | | For Shade Widths to 90" | 144" | 138" | 138" | NA | 138" | 138" | 138" | 144" | 144" | 144" | 144" | 144" |
| | | | | For Shade Widths to 96" | 144" | 138" | 138" | NA | 108" | 138" | 115" | 144" | 144" | 144" | 144" | 144" |
| | | | | For Shade Widths over 96" | 144" | 138" | 138" | NA | 60" | 138" | 115" | 144" | 144" | 144" | 144" | 144" |
| | | | | Railroaded | | | | | | | | | | | | |
| | | | | Maximum Width | 144"** | 120" | 120" | 84" | 108" | 120" | 120" | 144"** | 144"** | 144"** | 144"** | 144"** |
| | | | | **R Series clutch - max width - 120" | Maximum Height | | | | | | | | | Maximum Height | | |
| | | | | For Shade Widths to 78" | 144" | 144" | 144" | 72" | 138" | 144" | 144" | 144" | 144" | NA | NA | NA |
| | | | | For Shade Widths to 84" | 144" | 144" | 144" | 60" | 138" | 144" | 144" | 144" | 144" | 144" | 144" | 144" |
| | | | | For Shade Widths to 90" | 144" | 138" | 138" | NA | 138" | 138" | 138" | 144" | 144" | 144" | 144" | 144" |
| | | | | For Shade Widths to 96" | 144" | 138" | 138" | NA | 108" | 138" | 115" | 144" | 144" | 144" | 144" | 144" |
| | | | | For Shade Widths to 108" | 144" | 138" | 138" | NA | 66" | 138" | 115" | 144" | 144" | 144" | 144" | 144" |
| | | | | For Shade Widths to 120" | 144" | 138" | 138" | NA | NA | 138" | 115" | 144" | 144" | 144" | 144" | 144" |
| | | | | For Shade Widths over 120" | 144" | NA | NA | NA | NA | NA | NA | 144" | 144" | 144" | 144" | 144" |
| 10% Sheerweave 2360 | 126" | NO | NO | Non-Railroaded | | | | | | | | | | | | |
| | | | | Maximum Width | 126"** | 116" | 116" | 90" | 102" | 120" | 120" | 126"** | 126"** | 126"** | 126"** | 126"** |
| | | | | **R Series clutch - max width - 120" | Maximum Height | | | | | | | | | Maximum Height | | |
| | | | | For Shade Widths to 66" | 144" | 144" | 144" | 72" | 144" | 144" | 144" | 144" | 144" | N/A | N/A | N/A |
| | | | | For Shade Widths to 72" | 144" | 144" | 144" | 72" | 138" | 144" | 144" | 144" | 144" | NA | NA | NA |
| | | | | For Shade Widths to 78" | 144" | 144" | 144" | 72" | 138" | 144" | 144" | 144" | 144" | NA | NA | NA |
| | | | | For Shade Widths to 84" | 144" | 144" | 144" | 60" | 138" | 144" | 144" | 144" | 144" | 144" | 144" | 144" |
| | | | | For Shade Widths to 90" | 144" | 144" | 144" | 42" | 138" | 144" | 138" | 144" | 144" | 144" | 144" | 144" |
| | | | | For Shade Widths over 90" | 144" | 144" | 144" | N/A | 84" | 144" | 114" | 144" | 144" | 144" | 144" | 144" |

# PRODUCT SIZE SPECIFICATIONS – CLUTCH LIFT

**Minimum and Maximum Standards**
**For shades 12" wide, maximum length is 60"**
**All Patterns – Minimum Width: 12"  Minimum Height: 12".**
**Spring Assist strongly recommended on shade sizes over 80" x 80".**
**For TouchLift Cordless specifications, please refer to Product Specifications – Touch Lift section.**

Please Note:  Shade sizes that are wider than the fabric roll width indicated will be made with the fabric turned width for length (railroaded). The maximum width for non-railroaded shades is the roll width unless otherwise noted.

Fabrics turned width for length will have a visible seam when fabricated longer than their maximum roll width less 10".
Fabrics turned width for length may have an edge curl.  This is not considered a defect in the product.

| Material Name | Roll Width | Railroad Option | Splice/ Seam | | Standard Clutch | Fabric Valance | Deluxe Valance | Small Cassette | Medium Cassette | Large Cassette | 3" Fascia | 4" Fascia | Pocket Headrail | Spring Assist Clutch Standard Shade | Spring Assist Clutch 4" Fascia | Spring Assist Clutch Pocket |
|---|---|---|---|---|---|---|---|---|---|---|---|---|---|---|---|---|
| **10% Sheerweave 4100** | **98"** | YES | YES | **Non-Railroaded** | | | | | | | | | | | | |
| | | | | **Maximum Width** | **98"**** | **88"** | **88"** | **84"** | **96"** | **96"** | **98"**** | **98"**** | **98"**** | **98"**** | **98"**** | **98"**** |
| | | | | **R Series clutch - max width - 96" | **Maximum Height** | | | | | | | | | **Maximum Height** | | |
| | | | | **For Shade Widths to 60"** | 144" | 144" | 144" | 36" | 96" | 144" | 126" | 144" | 144" | NA | NA | NA |
| | | | | **For Shade Widths to 66"** | 144" | 120" | 120" | 36" | 96" | 120" | 114" | 144" | 144" | NA | NA | NA |
| | | | | **For Shade Widths to 78"** | 144" | 120" | 120" | 36" | 78" | 120" | 108" | 144" | 144" | NA | NA | NA |
| | | | | **For Shade Widths to 84"** | 144" | 120" | 120" | 36" | 78" | 120" | 108" | 144" | 126" | 144" | 144" | 78" |
| | | | | **For Shade Widths to 90"** | 144" | NA | NA | NA | 78" | 96" | 96" | 144" | 126" | 144" | 144" | 78" |
| | | | | **For Shade Widths to 96"** | 144" | NA | NA | NA | 78" | 78" | 78" | 144" | 126" | 144" | 144" | 78" |
| | | | | **For Shade Widths over 96"** | 144" | NA | NA | NA | NA | NA | 60" | 144" | 126" | 144" | 144" | 78" |
| | | | | **Railroaded** | | | | | | | | | | | | |
| | | | | **Maximum Width** | **120"**** | **102"**** | **102"**** | **84"** | **102"**** | **102"**** | **114"**** | **120"**** | **120"**** | **120"**** | **120"**** | **120"**** |
| | | | | **R Series clutch - max width - 96" | **Maximum Height** | | | | | | | | | **Maximum Height** | | |
| | | | | **For Shade Widths to 60"** | 120" | 120" | 120" | 36" | 96" | 120" | 126" | 120" | 120" | NA | NA | NA |
| | | | | **For Shade Widths to 78"** | 120" | 120" | 120" | 36" | 78" | 120" | 108" | 120" | 120" | NA | NA | NA |
| | | | | **For Shade Widths to 84"** | 120" | 120" | 120" | 36" | 78" | 120" | 108" | 120" | 120" | 120" | 120" | 78" |
| | | | | **For Shade Widths to 90"** | 120" | 96" | 96" | NA | 78" | 96" | 96" | 120" | 120" | 120" | 120" | 78" |
| | | | | **For Shade Widths to 96"** | 120" | 78" | 78" | NA | 78" | 78" | 78" | 120" | 120" | 120" | 120" | 78" |
| | | | | **For Shade Widths over 96"** | 120" | 60" | 60" | NA | 60" | 60" | 60" | 120" | 114" | 120" | 120" | 78" |
| | | | | | | | | *Small cassette - max shade size is 72" x 36" | | | | | | | | |
| **10% Sheerweave 5000** *(R26_03)* | **98"** | **NO** | **NO** | **Non-Railroaded** | | | | | | | | | | | | |
| | | | | **Maximum Width** | **98"**** | **88"** | **88"** | **NA** | **96"** | **96"** | **96"** | **98"**** | **98"**** | **98"**** | **98"**** | **98"**** |
| | | | | **R Series clutch - max width - 96" | **Maximum Height** | | | | | | | | | **Maximum Height** | | |
| | | | | **For Shade Widths to 60"** | 144" | 102" | 102" | NA | 72" | 102" | 96" | 144" | 144" | NA | NA | NA |
| | | | | **For Shade Widths to 66"** | 144" | 102" | 102" | NA | 72" | 102" | 96" | 144" | 126" | NA | NA | NA |
| | | | | **For Shade Widths to 72"** | 144" | 90" | 90" | NA | 72" | 90" | 84" | 144" | 126" | NA | NA | NA |
| | | | | **For Shade Widths to 78"** | 144" | 90" | 90" | NA | 60" | 90" | 78" | 144" | 126" | NA | NA | NA |
| | | | | **For Shade Widths to 84"** | 144" | 90" | 90" | NA | 54" | 90" | 78" | 144" | 126" | 144" | 114" | NA |
| | | | | **For Shade Widths to 88"** | 144" | 90" | 90" | NA | 54" | 90" | 78" | 144" | 96" | 144" | 114" | NA |
| | | | | **For Shade Widths to 90"** | 144" | N/A | N/A | NA | 54" | 90" | 78" | 144" | 96" | 144" | 114" | NA |
| | | | | **For Shade Widths to 96"** | 144" | N/A | N/A | NA | 54" | 78" | 78" | 144" | 96" | 144" | 114" | NA |
| | | | | **For Shade Widths over 96"** | 144" | N/A | N/A | NA | NA | N/A | NA | 144" | 96" | 144" | 114" | NA |
| **10% Sheerweave 5000** *(R26_U16, U24, U28, U29)* | **98"** | **NO** | **NO** | **Non-Railroaded** | | | | | | | | | | | | |
| | | | | **Maximum Width** | **98"**** | **88"** | **88"** | **NA** | **98"**** | **98"**** | **98"**** | **98"**** | **98"**** | **98"**** | **98"**** | **98"**** |
| | | | | **R Series clutch - max width - 96" | **Maximum Height** | | | | | | | | | **Maximum Height** | | |
| | | | | **For Shade Widths to 60"** | 144" | 120" | 120" | NA | 84" | 120" | 108" | 144" | 144" | NA | NA | NA |
| | | | | **For Shade Widths to 66"** | 144" | 114" | 114" | NA | 84" | 114" | 108" | 144" | 144" | NA | NA | NA |
| | | | | **For Shade Widths to 72"** | 144" | 102" | 102" | NA | 84" | 102" | 90" | 144" | 144" | NA | NA | NA |
| | | | | **For Shade Widths to 78"** | 144" | 102" | 102" | NA | 66" | 102" | 90" | 144" | 144" | NA | NA | NA |
| | | | | **For Shade Widths to 84"** | 144" | 102" | 102" | NA | 66" | 102" | 90" | 144" | 126" | 144" | 132" | NA |
| | | | | **For Shade Widths to 88"** | 144" | 96" | 96" | NA | 66" | 96" | 90" | 144" | 108" | 144" | 132" | NA |
| | | | | **For Shade Widths to 90"** | 144" | NA | NA | NA | 66" | 96" | 90" | 144" | 108" | 144" | 132" | NA |
| | | | | **For Shade Widths to 96"** | 144" | NA | NA | NA | 66" | 78" | 78" | 144" | 108" | 144" | 132" | NA |
| | | | | **For Shade Widths over 96"** | 144" | NA | NA | NA | 60" | 60" | 60" | 144" | 108" | 144" | 132" | 66" |

# PRODUCT SIZE SPECIFICATIONS – CLUTCH LIFT

**Minimum and Maximum Standards**
**For shades 12" wide, maximum length is 60"**
**All Patterns – Minimum Width: 12"  Minimum Height: 12".**
**Spring Assist strongly recommended on shade sizes over 80" x 80".**
**For TouchLift Cordless specifications, please refer to Product Specifications – Touch Lift section.**

Please Note:  Shade sizes that are wider than the fabric roll width indicated will be made with the fabric turned width for length (railroaded). The maximum width for non-railroaded shades is the roll width unless otherwise noted.

Fabrics turned width for length will have a visible seam when fabricated longer than their maximum roll width less 10".
Fabrics turned width for length may have an edge curl.  This is not considered a defect in the product.

| Material Name | Roll Width | Railroad Option | Splice/ Seam | | Standard Clutch | Fabric Valance | Deluxe Valance | Small Cassette | Medium Cassette | Large Cassette | 3" Fascia | 4" Fascia | Pocket Headrail | Spring Assist Clutch Standard Shade | Spring Assist Clutch 4" Fascia | Spring Assist Clutch Pocket |
|---|---|---|---|---|---|---|---|---|---|---|---|---|---|---|---|---|
| Alexandria | 78" | NO | NO | Non-Railroaded | | | | | | | | | | | | |
| | | | | Maximum Width | 78" | 70" | 70" | 78" | 78" | 78" | 78" | 78" | 78" | NA | NA | NA |
| | | | | | Maximum Height | | | | | | | | | Maximum Height | | |
| | | | | For Shade Widths to 72" | 144" | 144"* | 144"* | 108" | 144" | 144" | 144" | 144" | 144" | NA | NA | NA |
| | | | | For Shade Widths to 78" | 144" | NA | NA | 108" | 144" | 144" | 144" | 144" | 144" | NA | NA | NA |
| | | | | *Fabric & Deluxe Valances - max shade size  is 70" x 144" | | | | | | | | | | | | |
| Astaire | 94" | NO | NO | Non-Railroaded | | | | | | | | | | | | |
| | | | | Maximum Width | 94" | NA | NA | NA | 94" | 94" | 94" | 94" | 94" | 94" | 94" | 94" |
| | | | | | Maximum Height | | | | | | | | | Maximum Height | | |
| | | | | For Shade Widths to 78" | 144" | NA | NA | NA | 96" | 144" | 126" | 144" | 144" | NA | NA | NA |
| | | | | For Shade Widths to 84" | 144" | NA | NA | NA | 96" | 120" | 108" | 144" | 144" | 144" | 144" | 80" |
| | | | | For Shade Widths over 84" | 144" | NA | NA | NA | 78" | 120" | 108" | 144" | 144" | 144" | 144" | 80" |
| Avila R Blackout | 118" | YES | YES | Non-Railroaded | | | | | | | | | | | | |
| | | | | Maximum Width | 118" | 108" | 108" | 96" | 118" | 118" | 118" | 118" | 118" | 118" | 118" | 118" |
| | | | | | Maximum Height | | | | | | | | | Maximum Height | | |
| | | | | For Shade Widths to 78" | 144" | 144" | 144" | 84" | 144" | 144" | 144" | 144" | 144" | NA | NA | NA |
| | | | | For Shade Widths to 84" | 144" | 144" | 144" | 60" | 144" | 144" | 144" | 144" | 144" | 144" | 144" | 144" |
| | | | | For Shade Widths to 90" | 144" | 144" | 144" | 42" | 138" | 144" | 138" | 144" | 144" | 144" | 144" | 144" |
| | | | | For Shade Widths to 96" | 144" | 144" | 144" | 42" | 108" | 144" | 132" | 144" | 144" | 144" | 144" | 144" |
| | | | | For Shade Widths over 96" | 144" | 144" | 144" | NA | 80" | 144" | 132" | 144" | 144" | 144" | 144" | 144" |
| | | | | Railroaded | | | | | | | | | | | | |
| | | | | Maximum Width | 120" | 120" | 120" | 96" | 120" | 120" | 120" | 120" | 120" | 120" | 120" | 120" |
| | | | | | Maximum Height | | | | | | | | | Maximum Height | | |
| | | | | For Shade Widths to 78" | 144" | 144" | 144" | 84" | 144" | 144" | 144" | 144" | 144" | NA | NA | NA |
| | | | | For Shade Widths to 84" | 144" | 144" | 144" | 60" | 144" | 144" | 144" | 144" | 144" | 144" | 144" | 144" |
| | | | | For Shade Widths to 90" | 144" | 144" | 144" | 42" | 138" | 144" | 138" | 144" | 144" | 144" | 144" | 144" |
| | | | | For Shade Widths to 96" | 144" | 144" | 144" | 42" | 108" | 144" | 132" | 144" | 144" | 144" | 144" | 144" |
| | | | | For Shade Widths to 118" | 144" | 144" | 144" | NA | 80" | 144" | 132" | 144" | 144" | 144" | 144" | 144" |
| | | | | For Shade Widths over 118" | 120" | 120" | 120" | NA | 78" | 120" | 120" | 120" | 120" | 120" | 120" | 120" |
| Baroque | 78" | NO | NO | Non-Railroaded | | | | | | | | | | | | |
| | | | | Maximum Width | 78" | 66" | 66" | 78" | 78" | 78" | 78" | 78" | 78" | NA | NA | NA |
| | | | | | Maximum Height | | | | | | | | | Maximum Height | | |
| | | | | For Shade Widths to 66" | 144" | 144" | 144" | 84" | 144" | 144" | 144" | 144" | 144" | NA | NA | NA |
| | | | | For Shade Widths over 66" | 144" | NA | NA | 84" | 144" | 144" | 144" | 144" | 144" | NA | NA | NA |
| Blackout - Solid | 72" | YES | YES | Non-Railroaded | | | | | | | | | | | | |
| | | | | Maximum Width | 72" | 60" | 60" | 72" | 72" | 72" | 72" | 72" | 72" | NA | NA | NA |
| | | | | | Maximum Height | | | | | | | | | Maximum Height | | |
| | | | | For Shade Widths to 60" | 144" | NA | 144" | 126" | 144" | 144" | 144" | 144" | 144" | NA | NA | NA |
| | | | | For Shade Widths to 66" | 144" | NA | NA | 126" | 144" | 144" | 144" | 144" | 144" | NA | NA | NA |
| | | | | For Shade Widths over 66" | 144" | NA | NA | 114" | 144" | 144" | 144" | 144" | 144" | NA | NA | NA |
| | | | | Railroaded | | | | | | | | | | | | |
| | | | | Maximum Width | 144"** | 120" | 120" | 114"** | 120" | 120" | 120" | 144"** | 144"** | 144"** | 144"** | 144"** |
| | | | | **R Series clutch - max width - 120" | Maximum Height | | | | | | | | | Maximum Height | | |
| | | | | For Shade Widths to 66" | 130" | NA | 130" | 126" | 130" | 130" | 130" | 130" | 130" | NA | NA | NA |
| | | | | For Shade Widths to 72" | 130" | NA | 130" | 114" | 130" | 130" | 130" | 130" | 130" | NA | NA | NA |
| | | | | For Shade Widths over 72" | 130" | NA | 130" | 48" | 120" | 130" | 130" | 130" | 130" | 130" | 130" | 130" |
| Brilliance | 118" | NO | NO | Non-Railroaded | | | | | | | | | | | | |
| | | | | Maximum Width | 118" | 108" | 108" | 96" | 118" | 118" | 118" | 118" | 118" | 118" | 118" | 118" |
| | | | | | Maximum Height | | | | | | | | | Maximum Height | | |
| | | | | For Shade Widths to 78" | 144" | 144" | 144" | 80" | 144" | 144" | 144" | 144" | 144" | NA | NA | NA |
| | | | | For Shade Widths to 84" | 144" | 144" | 144" | 80" | 144" | 144" | 144" | 144" | 144" | 144" | 144" | 144" |
| | | | | For Shade Widths to 90" | 144" | 144" | 144" | 72" | 144" | 144" | 144" | 144" | 144" | 144" | 144" | 144" |
| | | | | For Shade Widths over 90" | 144" | 144" | 144" | 48" | 72 | 144" | 126" | 144" | 144" | 144" | 144" | 144" |
| Brilliance Blackout | 118" | NO | NO | Non-Railroaded | | | | | | | | | | | | |
| | | | | Maximum Width | 118" | 108" | 108" | 90" | 108" | 118" | 118" | 118" | 118" | 118" | 118" | 118" |
| | | | | | Maximum Height | | | | | | | | | Maximum Height | | |
| | | | | For Shade Widths to 78" | 144" | 144" | 144" | 60" | 114" | 144" | 144" | 144" | 144" | NA | NA | NA |
| | | | | For Shade Widths to 84" | 144" | 144" | 144" | 60" | 114" | 144" | 144" | 144" | 144" | 144" | 144" | 120" |
| | | | | For Shade Widths to 90" | 144" | 138" | 138" | 42" | 114" | 138" | 138" | 144" | 144" | 144" | 144" | 120" |
| | | | | For Shade Widths over 90" | 144" | 114" | 114" | NA | 66" | 114" | 96" | 144" | 144" | 144" | 144" | 120" |

# PRODUCT SIZE SPECIFICATIONS – CLUTCH LIFT

**Minimum and Maximum Standards**
**For shades 12" wide, maximum length is 60"**
**All Patterns – Minimum Width: 12"  Minimum Height: 12".**
**Spring Assist strongly recommended on shade sizes over 80" x 80".**
**For TouchLift Cordless specifications, please refer to Product Specifications – Touch Lift section.**

Please Note:  Shade sizes that are wider than the fabric roll width indicated will be made with the fabric turned width for length (railroaded). The maximum width for non-railroaded shades is the roll width unless otherwise noted.

Fabrics turned width for length will have a visible seam when fabricated longer than their maximum roll width less 10".
Fabrics turned width for length may have an edge curl.  This is not considered a defect in the product.

| Material Name | Roll Width | Railroad Option | Splice/ Seam | | Standard Clutch | Fabric Valance | Deluxe Valance | Small Cassette | Medium Cassette | Large Cassette | 3" Fascia | 4" Fascia | Pocket Headrail | Spring Assist Clutch Standard Shade | Spring Assist Clutch 4" Fascia | Spring Assist Clutch Pocket |
|---|---|---|---|---|---|---|---|---|---|---|---|---|---|---|---|---|
| Carrara | 110" | NO | NO | Non-Railroaded | | | | | | | | | | | | |
| | | | | Maximum Width | 110" | 100" | 100" | 96" | 110" | 110" | 110" | 110" | 110" | 110" | 110" | 110" |
| | | | | | Maximum Height | | | | | | | | | Maximum Height | | |
| | | | | For Shade Widths to 78" | 144" | 144" | 144" | 84" | 144" | 144" | 144" | 144" | 144" | NA | NA | NA |
| | | | | For Shade Widths to 84" | 144" | 144" | 144" | 60" | 144" | 144" | 144" | 144" | 144" | 144" | 144" | 144" |
| | | | | For Shade Widths to 90" | 144" | 144" | 144" | 42" | 138" | 144" | 138" | 144" | 144" | 144" | 144" | 144" |
| | | | | For Shade Widths to 96" | 144" | 144" | 144" | NA | 108" | 144" | 138" | 144" | 144" | 144" | 144" | 144" |
| | | | | For Shade Widths over 90" | 144" | 144" | 144" | NA | 66" | 144" | 138" | 144" | 144" | 144" | 144" | 144" |
| Carrara Blackout | 110" | NO | NO | Non-Railroaded | | | | | | | | | | | | |
| | | | | Maximum Width | 110"** | 96" | 96" | 84" | 108"** | 108"** | 108"** | 110"** | 110"** | 110"** | 110"** | 110"** |
| | | | | **R Series clutch - max width - 96" | Maximum Height | | | | | | | | | Maximum Height | | |
| | | | | For Shade Widths to 66" | 144" | 144" | 144" | 48" | 114" | 144" | 132" | 144" | 144" | NA | NA | NA |
| | | | | For Shade Widths to 72" | 144" | 144" | 144" | 48" | 96" | 144" | 132" | 144" | 144" | NA | NA | NA |
| | | | | For Shade Widths to 84" | 144" | 126" | 126" | 42" | 96" | 126" | 126" | 144" | 144" | 144" | 144" | 102" |
| | | | | For Shade Widths to 90" | 144" | 96" | 96" | NA | 96" | 96" | 96" | 144" | 144" | 144" | 144" | 102" |
| | | | | For Shade Widths to 96" | 144" | 96" | 96" | NA | 78" | 96" | 78" | 144" | 144" | 144" | 144" | 102" |
| | | | | For Shade Widths to 102" | 144" | NA | NA | NA | 60" | 60" | 60" | 144" | 144" | 144" | 144" | 102" |
| | | | | For Shade Widths over 102" | 144" | NA | NA | NA | 48" | 48" | 48" | 144" | 138" | 144" | 144" | 102" |
| Claudio | 110" | NO | NO | Non-Railroaded | | | | | | | | | | | | |
| | | | | Maximum Width | 110" | 100" | 100" | 96" | 110" | 110" | 110" | 110" | 110" | 110" | 110" | 110" |
| | | | | | Maximum Height | | | | | | | | | Maximum Height | | |
| | | | | For Shade Widths to 78" | 144" | 144" | 144" | 96" | 144" | 144" | 144" | 144" | 144" | NA | NA | NA |
| | | | | For Shade Widths to 84" | 144" | 144" | 144" | 96" | 144" | 144" | 144" | 144" | 144" | 144" | 144" | 144" |
| | | | | For Shade Widths to 90" | 144" | 144" | 144" | 72" | 144" | 144" | 144" | 144" | 144" | 144" | 144" | 144" |
| | | | | For Shade Widths over 90" | 144" | 144" | 144" | 48" | 90" | 144" | 144" | 144" | 144" | 144" | 144" | 144" |
| Claudio Blackout | 110" | NO | NO | Non-Railroaded | | | | | | | | | | | | |
| | | | | Maximum Width | 110" | 100" | 100" | 90" | 108" | 110" | 110" | 110" | 110" | 110" | 110" | 110" |
| | | | | | Maximum Height | | | | | | | | | Maximum Height | | |
| | | | | For Shade Widths to 78" | 144" | 144" | 144" | 60" | 114" | 144" | 144" | 144" | 144" | NA | NA | NA |
| | | | | For Shade Widths to 84" | 144" | 144" | 144" | 60" | 114" | 144" | 144" | 144" | 144" | 144" | 144" | 120" |
| | | | | For Shade Widths to 90" | 144" | 138" | 138" | 42" | 114" | 138" | 138" | 144" | 144" | 144" | 144" | 120" |
| | | | | For Shade Widths over 90" | 144" | 120" | 120" | NA | 66" | 120" | 96" | 144" | 144" | 144" | 144" | 120" |
| Cusco | 110" | YES | YES | Non-Railroaded | | | | | | | | | | | | |
| | | | | Maximum Width | 110" | 100" | 100" | 90" | 110" | 110" | 110" | 110" | 110" | 110" | 110" | 110" |
| | | | | | Maximum Height | | | | | | | | | Maximum Height | | |
| | | | | For Shade Widths to 78" | 144" | 144" | 144" | 66" | 126" | 144" | 144" | 144" | 144" | NA | NA | NA |
| | | | | For Shade Widths to 84" | 144" | 144" | 144" | 60" | 126" | 144" | 144" | 144" | 144" | 144" | 144" | 132" |
| | | | | For Shade Widths to 90" | 144" | 138" | 138" | 42" | 126" | 138" | 138" | 144" | 144" | 144" | 144" | 132" |
| | | | | For Shade Widths to 96" | 144" | 132" | 132" | NA | 108" | 132" | 108" | 144" | 144" | 144" | 144" | 132" |
| | | | | For Shade Widths to 100" | 144" | 132" | 132" | NA | 84" | 132" | 108" | 144" | 144" | 144" | 144" | 132" |
| | | | | For Shade Widths to 102" | 144" | NA | NA | NA | 84" | 132" | 108" | 144" | 144" | 144" | 144" | 132" |
| | | | | For Shade Widths over 102" | 144" | NA | NA | NA | 60" | 132" | 108" | 144" | 144" | 144" | 144" | 132" |
| | | | | Railroaded | | | | | | | | | | | | |
| | | | | Maximum Width | 144"** | 120" | 120" | 90" | 120" | 120" | 120" | 144"** | 144"** | 144"** | 144"** | 144"** |
| | | | | **R Series clutch - max width - 120" | Maximum Height | | | | | | | | | Maximum Height | | |
| | | | | For Shade Widths to 78" | 144" | 144" | 144" | 66" | 126" | 144" | 144" | 144" | 144" | NA | NA | NA |
| | | | | For Shade Widths to 84" | 144" | 144" | 144" | 60" | 126" | 144" | 144" | 144" | 144" | 144" | 144" | 132" |
| | | | | For Shade Widths to 90" | 144" | 138" | 138" | 42" | 126" | 138" | 138" | 144" | 144" | 144" | 144" | 132" |
| | | | | For Shade Widths to 96" | 144" | 132" | 132" | NA | 108" | 132" | 108" | 144" | 144" | 144" | 144" | 132" |
| | | | | For Shade Widths to 102" | 144" | 132" | 132" | NA | 84" | 132" | 108" | 144" | 144" | 144" | 144" | 132" |
| | | | | For Shade Widths to 110" | 144" | 132" | 132" | NA | 60" | 132" | 108" | 144" | 144" | 144" | 144" | 132" |
| | | | | For Shade Widths over 110" | 144" | 132" | 132" | NA | 60" | 132" | 108" | 144" | 132" | 144" | 144" | 132" |
| Darien | 90" | NO | NO | Non-Railroaded | | | | | | | | | | | | |
| | | | | Maximum Width | 90" | 80" | 80" | 90" | 90" | 90" | 90" | 90" | 90" | 90" | 90" | 90" |
| | | | | | Maximum Height | | | | | | | | | Maximum Height | | |
| | | | | For Shade Widths to 78" | 144" | 144" | 144" | 114" | 144" | 144" | 144" | 144" | 144" | NA | NA | NA |
| | | | | For Shade Widths to 80" | 144" | 144" | 144" | 102" | 144" | 144" | 144" | 144" | 144" | 144" | 144" | 144" |
| | | | | For Shade Widths to 84" | 144" | NA | NA | 102" | 144" | 144" | 144" | 144" | 144" | 144" | 144" | 144" |
| | | | | For Shade Widths over 84" | 144" | NA | NA | 72" | 144" | 144" | 144" | 144" | 144" | 144" | 144" | 144" |

# PRODUCT SIZE SPECIFICATIONS – CLUTCH LIFT

**Minimum and Maximum Standards**
**For shades 12" wide, maximum length is 60"**
**All Patterns – Minimum Width: 12"  Minimum Height: 12".**
**Spring Assist strongly recommended on shade sizes over 80" x 80".**
**For TouchLift Cordless specifications, please refer to Product Specifications – Touch Lift section.**

Please Note:  Shade sizes that are wider than the fabric roll width indicated will be made with the fabric turned width for length (railroaded). The maximum width for non-railroaded shades is the roll width unless otherwise noted.

Fabrics turned width for length will have a visible seam when fabricated longer than their maximum roll width less 10".
Fabrics turned width for length may have an edge curl.  This is not considered a defect in the product.

| Material Name | Roll Width | Railroad Option | Splice/ Seam | | Standard Clutch | Fabric Valance | Deluxe Valance | Small Cassette | Medium Cassette | Large Cassette | 3" Fascia | 4" Fascia | Pocket Headrail | Spring Assist Clutch Standard Shade | Spring Assist Clutch 4" Fascia | Spring Assist Clutch Pocket |
|---|---|---|---|---|---|---|---|---|---|---|---|---|---|---|---|---|
| Drizzle | 94" | YES | YES | Non-Railroaded | | | | | | | | | | | | |
| | | | | Maximum Width | 94" | 84" | 84" | 94" | 94" | 94" | 94" | 94" | 94" | 94" | 94" | 94" |
| | | | | | Maximum Height | | | | | | | | | Maximum Height | | |
| | | | | For Shade Widths to 72" | 144" | 144"* | 144"* | 90" | 144" | 144" | 144" | 144" | 144" | NA | NA | NA |
| | | | | For Shade Widths to 78" | 144" | 144" | NA | 90" | 144" | 144" | 144" | 144" | 144" | NA | NA | NA |
| | | | | For Shade Widths to 84" | 144" | 144" | 144" | 90" | 144" | 144" | 144" | 144" | 144" | 144" | 144" | 144" |
| | | | | For Shade Widths to 90" | 144" | NA | NA | 72" | 144" | 144" | 144" | 144" | 144" | 144" | 144" | 144" |
| | | | | For Shade Widths over 90" | 144" | NA | NA | 48" | 144" | 144" | 144" | 144" | 144" | 144" | 144" | 144" |
| | | | | | * Fabric & Deluxe Valances - max shade size is 84" x 144" | | | | | | | | | | | |
| | | | | Railroaded | | | | | | | | | | | | |
| | | | | Maximum Width | 120" | 120" | 120" | 96" | 120" | 120" | 120" | 120" | 120" | 120" | 120" | 120" |
| | | | | | Maximum Height | | | | | | | | | Maximum Height | | |
| | | | | For Shade Widths to 72" | 144" | 144" | 144" | 90" | 144" | 144" | 144" | 144" | 144" | NA | NA | NA |
| | | | | For Shade Widths to 78" | 140" | 140" | 140" | 90" | 140" | 140" | 140" | 140" | 140" | NA | NA | NA |
| | | | | For Shade Widths to 84" | 120" | 120" | 120" | 90" | 120" | 120" | 120" | 120" | 120" | 120" | 120" | 120" |
| | | | | For Shade Widths to 90" | 120" | 120" | 120" | 72" | 120" | 120" | 120" | 120" | 120" | 120" | 120" | 120" |
| | | | | For Shade Widths to 96" | 120" | 120" | 120" | 48" | 120" | 120" | 120" | 120" | 120" | 120" | 120" | 120" |
| | | | | For Shade Widths over 96" | 120" | 120" | 120" | NA | 85" | 120" | 120" | 120" | 120" | 120" | 120" | 120" |
| Fiona | 78" | NO | NO | Non-Railroaded | | | | | | | | | | | | |
| | | | | Maximum Width | 78" | 70" | 70" | 78" | 78" | 78" | 78" | 78" | 78" | NA | NA | NA |
| | | | | | Maximum Height | | | | | | | | | Maximum Height | | |
| | | | | For Shade Widths to 70" | 144" | 144" | 144" | 90" | 144" | 144" | 144" | 144" | 144" | NA | NA | NA |
| | | | | For Shade Widths to 72" | 144" | NA | NA | 90" | 144" | 144" | 144" | 144" | 144" | NA | NA | NA |
| | | | | For Shade Widths over 72" | 144" | NA | NA | 84" | 144" | 144" | 144" | 144" | 144" | NA | NA | NA |
| Flocke Blackout | 94" | YES | YES | Non-Railroaded | | | | | | | | | | | | |
| | | | | Maximum Width | 94" | 84" | 84" | 72" | 94" | 94" | 94" | 94" | 94" | 94" | 94" | 94" |
| | | | | | Maximum Height | | | | | | | | | Maximum Height | | |
| | | | | For Shade Widths to 78" | 144" | 144" | 144" | 60"* | 114" | 144" | 144" | 144" | 144" | NA | NA | NA |
| | | | | For Shade Widths to 84" | 144" | 126" | 126" | NA | 114" | 126" | 126" | 144" | 144" | 144" | 144" | 132" |
| | | | | For Shade Widths to 90" | 144" | NA | NA | NA | 96" | 96" | 96" | 144" | 144" | 144" | 144" | 132" |
| | | | | For Shade Widths over 90" | 144" | NA | NA | NA | 78" | 78" | 78" | 144" | 144" | 144" | 144" | 132" |
| | | | | | *Small cassette - max shade size is 72" x 60" | | | | | | | | | | | |
| | | | | Railroaded | | | | | | | | | | | | |
| | | | | Maximum Width | 144"** | 96" | 96" | 72" | 96" | 96" | 96" | 144"** | 144"** | 144"** | 144"** | 144"** |
| | | | | **R Series clutch - max width - 96" | Maximum Height | | | | | | | | | Maximum Height | | |
| | | | | For Shade Widths to 78" | 144" | 144" | 144" | 60"* | 114" | 144" | 144" | 144" | 144" | NA | NA | NA |
| | | | | For Shade Widths to 84" | 144" | 126" | 126" | NA | 114" | 126" | 126" | 144" | 144" | 144" | 144" | 132" |
| | | | | For Shade Widths to 90" | 144" | 96" | 96" | NA | 96" | 96" | 96" | 144" | 144" | 144" | 144" | 132" |
| | | | | For Shade Widths to 96" | 144" | 78" | 78" | NA | 78" | 78" | 78" | 144" | 144" | 144" | 144" | 132" |
| | | | | For Shade Widths over 96" | 144" | NA | NA | NA | NA | NA | NA | 144" | 132" | 144" | 144" | 132" |
| | | | | | *Small cassette - max shade size is 72" x 60" | | | | | | | | | | | |
| Hayworth | 98" | YES | YES | Non-Railroaded | | | | | | | | | | | | |
| | | | | Maximum Width | 98" | 90" | 90" | 96" | 98" | 98" | 98" | 98" | 98" | 98" | 98" | 98" |
| | | | | | Maximum Height | | | | | | | | | Maximum Height | | |
| | | | | For Shade Widths to 84" | 144" | 144" | 144" | 102" | 144" | 144" | 144" | 144" | 144" | 144" | 144" | 144" |
| | | | | For Shade Widths to 90" | 144" | 144" | 144" | 72" | 144" | 144" | 144" | 144" | 144" | 144" | 144" | 144" |
| | | | | For Shade Widths over 90" | 144" | NA | NA | 48" | 144" | 144" | 144" | 144" | 144" | 144" | 144" | 144" |
| | | | | Railroaded | | | | | | | | | | | | |
| | | | | Maximum Width | 144"** | 126" | 126" | 126" | 126" | 126" | 126" | 144"** | 144"** | 144"** | 144"** | 144"** |
| | | | | **R Series clutch - max width -126 " | Maximum Height | | | | | | | | | Maximum Height | | |
| | | | | For Shade Widths to 84" | 144" | 144" | 144" | 102" | 144" | 144" | 144" | 144" | 144" | 144" | 144" | 144" |
| | | | | For Shade Widths to 90" | 144" | 144" | 144" | 72" | 144" | 144" | 144" | 144" | 144" | 144" | 144" | 144" |
| | | | | For Shade Widths to 98" | 144" | 144" | 144" | 48" | 144" | 144" | 144" | 144" | 144" | 144" | 144" | 144" |
| | | | | For Shade Widths over 98" | 144" | 144" | 144" | 42" | 120" | 144" | 144" | 144" | 144" | 144" | 144" | 144" |
| Illusion | 72" | YES | NO | Non-Railroaded | | | | | | | | | | | | |
| | | | | Maximum Width | 72" | 62" | 62" | 72" | 72" | 72" | 72" | 72" | 72" | NA | NA | NA |
| | | | | | Maximum Height | | | | | | | | | Maximum Height | | |
| | | | | For Shade Widths to 62" | 144" | 144" | 144" | 78" | 144" | 144" | 144" | 144" | 144" | NA | NA | NA |
| | | | | For Shade Widths over 62" | 144" | NA | NA | 78" | 144" | 144" | 144" | 144" | 144" | NA | NA | NA |
| | | | | Railroaded | | | | | | | | | | | | |
| | | | | Maximum Width | 120" | 120" | 120" | 96" | 120" | 120" | 120" | 120" | 120" | 120" | 120" | 120" |
| | | | | | Maximum Height | | | | | | | | | Maximum Height | | |
| | | | | For Shade Widths to 72" | 60" | 60" | 60" | 60" | 60" | 60" | 60" | 60" | 60" | NA | NA | NA |
| | | | | For Shade Widths over 72" | 60" | 60" | 60" | 48" | 60" | 60" | 60" | 60" | 60" | NA | NA | NA |

# PRODUCT SIZE SPECIFICATIONS – CLUTCH LIFT

**Minimum and Maximum Standards**
**For shades 12" wide, maximum length is 60"**
**All Patterns – Minimum Width: 12"  Minimum Height: 12".**
**Spring Assist strongly recommended on shade sizes over 80" x 80".**
**For TouchLift Cordless specifications, please refer to Product Specifications – Touch Lift section.**

Please Note:  Shade sizes that are wider than the fabric roll width indicated will be made with the fabric turned width for length (railroaded). The maximum width for non-railroaded shades is the roll width unless otherwise noted.

Fabrics turned width for length will have a visible seam when fabricated longer than their maximum roll width less 10".
Fabrics turned width for length may have an edge curl.  This is not considered a defect in the product.

| Material Name | Roll Width | Railroad Option | Splice/ Seam | | Standard Clutch | Fabric Valance | Deluxe Valance | Small Cassette | Medium Cassette | Large Cassette | 3" Fascia | 4" Fascia | Pocket Headrail | Spring Assist Clutch Standard Shade | Spring Assist Clutch 4" Fascia | Spring Assist Clutch Pocket |
|---|---|---|---|---|---|---|---|---|---|---|---|---|---|---|---|---|
| Jasper | 110" | YES | YES | Non-Railroaded | | | | | | | | | | | | |
| | | | | Maximum Width | 110" | 100" | 100" | 72" | 108" | 110" | 110" | 110" | 110" | 110" | 110" | 110" |
| | | | | | Maximum Height | | | | | | | | | Maximum Height | | |
| | | | | For Shade Widths to 84" | 144" | 144" | 144" | 60"* | 144" | 144" | 144" | 144" | 144" | 144" | 144" | 144" |
| | | | | For Shade Widths to 90" | 144" | 138" | 138" | NA | 138" | 144" | 138" | 144" | 144" | 144" | 144" | 144" |
| | | | | For Shade Widths to 96" | 144" | 108" | 108" | NA | 108" | 144" | 120" | 144" | 144" | 144" | 144" | 144" |
| | | | | For Shade Widths over 96" | 144" | 84" | 84" | NA | 70" | 144" | 120" | 144" | 144" | 144" | 144" | 144" |
| | | | | | *Small cassette - max shade size is 72" x 60" | | | | | | | | | | | |
| | | | | Railroaded | | | | | | | | | | | | |
| | | | | Maximum Width | 144"** | 120" | 120" | 72" | 108" | 120" | 120" | 144"** | 144"** | 144"** | 144"** | 144"** |
| | | | | **R Series clutch - max width - 120" | Maximum Height | | | | | | | | | Maximum Height | | |
| | | | | For Shade Widths to 84" | 144" | 144" | 144" | 60"* | 144" | 144" | 144" | 144" | 144" | 144" | 144" | 144" |
| | | | | For Shade Widths to 90" | 144" | 144" | 144" | NA | 138" | 144" | 138" | 144" | 144" | 144" | 144" | 144" |
| | | | | For Shade Widths to 96" | 144" | 144" | 144" | NA | 108" | 144" | 120" | 144" | 144" | 144" | 144" | 144" |
| | | | | For Shade Widths to 102" | 144" | 144" | 144" | NA | 84" | 144" | 120" | 144" | 144" | 144" | 144" | 144" |
| | | | | For Shade Widths over 102" | 144" | 144" | 144" | NA | 70" | 144" | 120" | 144" | 144" | 144" | 144" | 144" |
| | | | | | *Small cassette - max shade size is 72" x 60" | | | | | | | | | | | |
| Linview | 122" | YES | YES | Non-Railroaded | | | | | | | | | | | | |
| *Note: Heat sealed is requried beyond 120"x120".* | | | | Maximum Width | 122" | 112" | 112" | 96" | 122" | 122" | 122" | 122" | 122" | 122" | 122" | 122" |
| | | | | | Maximum Height | | | | | | | | | Maximum Height | | |
| | | | | For Shade Widths to 84" | 144" | 144" | 144" | 90" | 144" | 144" | 144" | 144" | 144" | 144" | 144" | 144" |
| | | | | For Shade Widths to 90" | 144" | 144" | 144" | 72" | 144" | 144" | 144" | 144" | 144" | 144" | 144" | 144" |
| | | | | For Shade Widths to 96" | 144" | 144" | 144" | 48" | 144 | 144" | 144" | 144" | 144" | 144" | 144" | 144" |
| | | | | For Shade Widths to 112" | 144" | 144" | 144" | NA | 84" | 144" | 144" | 144" | 144" | 144" | 144" | 144" |
| | | | | For Shade Widths over 112" | 144" | NA | NA | NA | 42" | 144" | 144" | 144" | 144" | 144" | 144" | 144" |
| | | | | Railroaded | | | | | | | | | | | | |
| | | | | Maximum Width | 120" | 120" | 120" | 96" | 120" | 120" | 120" | 120" | 120" | 120" | 120" | 120" |
| | | | | | Maximum Height | | | | | | | | | Maximum Height | | |
| | | | | For Shade Widths to 84" | 120" | 120" | 120" | 90" | 120" | 120" | 120" | 120" | 120" | 120" | 120" | 120" |
| | | | | For Shade Widths to 90" | 120" | 120" | 120" | 72" | 120" | 120" | 120" | 120" | 120" | 120" | 120" | 120" |
| | | | | For Shade Widths to 96" | 120" | 120" | 120" | 48" | 120" | 120" | 120" | 120" | 120" | 120" | 120" | 120" |
| | | | | For Shade Widths over 96" | 120" | 120" | 120" | NA | 60" | 120" | 120" | 120" | 120" | 120" | 120" | 120" |
| Linview Blackout | 94" | NO | NO | Non-Railroaded | | | | | | | | | | | | |
| | | | | Maximum Width | 94" | 84" | 84" | 94" | 94" | 94" | 94" | 94" | 94" | 94" | 94" | 94" |
| | | | | | Maximum Height | | | | | | | | | Maximum Height | | |
| | | | | For Shade Widths to 78" | 144" | 144" | 144" | 78" | 144" | 144" | 144" | 144" | 144" | NA | NA | NA |
| | | | | For Shade Widths to 84" | 144" | 144" | 144" | 60" | 144" | 144" | 144" | 144" | 144" | 144" | 144" | 144" |
| | | | | For Shade Widths to 90" | 144" | NA | NA | 42" | 138" | 144" | 138" | 144" | 144" | 144" | 144" | 144" |
| | | | | For Shade Widths over 90" | 144" | NA | NA | 38" | 108" | 144" | 132" | 144" | 144" | 144" | 144" | 144" |
| Montero | 94" | NO | NO | Non-Railroaded | | | | | | | | | | | | |
| | | | | Maximum Width | 94" | 84" | 84" | 72" | 94" | 94" | 94" | 94" | 94" | 94" | 94" | 94" |
| | | | | | Maximum Height | | | | | | | | | Maximum Height | | |
| | | | | For Shade Widths to 78" | 144" | 144" | 144" | 60"* | 132" | 144" | 144" | 144" | 144" | NA | NA | NA |
| | | | | For Shade Widths to 84" | 144" | 138" | 138" | NA | 132" | 138" | 138" | 144" | 144" | 144" | 144" | 138" |
| | | | | For Shade Widths to 90" | 144" | NA | NA | NA | 108" | 108" | 108" | 144" | 144" | 144" | 144" | 138" |
| | | | | For Shade Widths over 90" | 144" | NA | NA | NA | 84" | 84" | 84" | 144" | 138" | 144" | 144" | 138" |
| | | | | | *Small cassette - max shade size is 72" x 60" | | | | | | | | | | | |
| Moravia | 96" | NO | NO | Non-Railroaded | | | | | | | | | | | | |
| | | | | Maximum Width | 96" | 86" | 86" | 96" | 96" | 96" | 96" | 96" | 96" | 96" | 96" | 96" |
| | | | | | Maximum Height | | | | | | | | | Maximum Height | | |
| | | | | For Shade Widths to 78" | 144" | 144" | 144" | 74" | 144" | 144" | 144" | 144" | 144" | NA | NA | NA |
| | | | | For Shade Widths to 84" | 144" | 144" | 144" | 74" | 138" | 144" | 144" | 144" | 144" | 144" | 144" | 144" |
| | | | | For Shade Widths to 86" | 144" | 144" | 144" | 72" | 138" | 144" | 144" | 144" | 144" | 144" | 144" | 144" |
| | | | | For Shade Widths to 90" | 144" | NA | NA | 72" | 138" | 144" | 144" | 144" | 144" | 144" | 144" | 144" |
| | | | | For Shade Widths over 90" | 144" | NA | NA | 48" | 138" | 144" | 144" | 144" | 144" | 144" | 144" | 144" |
| Santa Cruz | 94" | NO | NO | Non-Railroaded | | | | | | | | | | | | |
| | | | | Maximum Width | 94" | 84" | 84" | 72" | 94" | 94" | 94" | 94" | 94" | 94" | 94" | 94" |
| | | | | | Maximum Height | | | | | | | | | Maximum Height | | |
| | | | | For Shade Widths to 78" | 144" | 144" | 144" | 60"* | 132" | 144" | 144" | 144" | 144" | NA | NA | NA |
| | | | | For Shade Widths to 84" | 144" | 138" | 138" | NA | 132" | 138" | 138" | 144" | 144" | 144" | 144" | 144" |
| | | | | For Shade Widths to 90" | 144" | NA | NA | NA | 108" | 108" | 108" | 144" | 144" | 144" | 144" | 144" |
| | | | | For Shade Widths over 90" | 144" | NA | NA | NA | 84" | 84" | 84" | 144" | 138" | 144" | 144" | 138" |
| | | | | | *Small cassette - max shade size is 72" x 60" | | | | | | | | | | | |
| Santa Cruz Blackout | 94" | NO | NO | Non-Railroaded | | | | | | | | | | | | |
| | | | | Maximum Width | 94" | 84" | 84" | 84" | 94" | 94" | 94" | 94" | 94" | 94" | 94" | 94" |
| | | | | | Maximum Height | | | | | | | | | Maximum Height | | |
| | | | | For Shade Widths to 72" | 144" | 144" | 144" | 48" | 114" | 144" | 138" | 144" | 144" | NA | NA | NA |
| | | | | For Shade Widths to 78" | 144" | 144" | 144" | 48" | 102" | 144" | 138" | 144" | 144" | NA | NA | NA |
| | | | | For Shade Widths to 84" | 144" | 126" | 126" | 42" | 102" | 126" | 126" | 144" | 144" | 144" | 144" | 102" |
| | | | | For Shade Widths to 90" | 144" | NA | NA | NA | 96" | 102" | 96" | 144" | 144" | 144" | 144" | 102" |
| | | | | For Shade Widths over 90" | 144" | NA | NA | NA | 78" | 102" | 84" | 144" | 144" | 144" | 144" | 102" |

# PRODUCT SIZE SPECIFICATIONS – CLUTCH LIFT

**Minimum and Maximum Standards**
**For shades 12" wide, maximum length is 60"**
**All Patterns – Minimum Width: 12"  Minimum Height: 12".**
**Spring Assist strongly recommended on shade sizes over 80" x 80".**
**For TouchLift Cordless specifications, please refer to Product Specifications – Touch Lift section.**

Please Note:  Shade sizes that are wider than the fabric roll width indicated will be made with the fabric turned width for length (railroaded). The maximum width for non-railroaded shades is the roll width unless otherwise noted.

Fabrics turned width for length will have a visible seam when fabricated longer than their maximum roll width less 10".
Fabrics turned width for length may have an edge curl.  This is not considered a defect in the product.

| Material Name | Roll Width | Railroad Option | Splice/ Seam | | Standard Clutch | Fabric Valance | Deluxe Valance | Small Cassette | Medium Cassette | Large Cassette | 3" Fascia | 4" Fascia | Pocket Headrail | Spring Assist Clutch Standard Shade | Spring Assist Clutch 4" Fascia | Spring Assist Clutch Pocket |
|---|---|---|---|---|---|---|---|---|---|---|---|---|---|---|---|---|
| Scala Blackout | 110" | YES | YES | Non-Railroaded | | | | | | | | | | | | |
| | | | | Maximum Width | 110" | 100" | 100" | 72" | 110" | 110" | 110" | 110" | 110" | 110" | 110" | 110" |
| | | | | | Maximum Height | | | | | | | | | Maximum Height | | |
| | | | | For Shade Widths to 84" | 144" | NA | 144" | 74"* | 144" | 144" | 144" | 144" | 144" | 144" | 144" | 144" |
| | | | | For Shade Widths to 90" | 144" | NA | 144" | NA | 138" | 144" | 138" | 144" | 144" | 144" | 144" | 144" |
| | | | | For Shade Widths to 96" | 144" | NA | 144" | NA | 108" | 144" | 132" | 144" | 144" | 144" | 144" | 144" |
| | | | | For Shade Widths over 96" | 144" | NA | 144" | NA | 72" | 144" | 132" | 144" | 144" | 144" | 144" | 144" |
| | | | | | *Small cassette - max shade width is 72" x 74" | | | | | | | | | | | |
| | | | | Railroaded | | | | | | | | | | | | |
| | | | | Maximum Width | 144"** | 120" | 120" | 72" | 114" | 120" | 120" | 144"** | 144"** | 144"** | 144"** | 144"** |
| | | | | **R Series clutch - max width - 120" | Maximum Height | | | | | | | | | Maximum Height | | |
| | | | | For Shade Widths to 84" | 144" | NA | 144" | 74"* | 144" | 144" | 144" | 144" | 144" | 144" | 144" | 144" |
| | | | | For Shade Widths to 90" | 144" | NA | 144" | NA | 138" | 144" | 138" | 144" | 144" | 144" | 144" | 144" |
| | | | | For Shade Widths to 96" | 144" | NA | 144" | NA | 108" | 144" | 132" | 144" | 144" | 144" | 144" | 144" |
| | | | | For Shade Widths to 102" | 144" | NA | 144" | NA | 84" | 144" | 132" | 144" | 144" | 144" | 144" | 144" |
| | | | | For Shade Widths over 102" | 144" | NA | 144" | NA | 72" | 144" | 132" | 144" | 144" | 144" | 144" | 144" |
| | | | | | *Small cassette - max shade width is 72" x 74" | | | | | | | | | | | |
| Sheerweave 7200R | 118" | NO | NO | Non-Railroaded | | | | | | | | | | | | |
| | | | | Maximum Width | 118" | 108" | 108" | 90" | 114" | 118" | 118" | 118" | 118" | 118" | 118" | 118" |
| | | | | | Maximum Height | | | | | | | | | Maximum Height | | |
| | | | | For Shade Widths to 66" | 144" | 144" | 144" | 60" | 144" | 144" | 144" | 144" | 144" | NA | NA | NA |
| | | | | For Shade Widths to 72" | 144" | 144" | 144" | 60" | 114" | 144" | 144" | 144" | 144" | NA | NA | NA |
| | | | | For Shade Widths to 78" | 144" | 144" | 144" | 60" | 114" | 144" | 144" | 144" | 144" | NA | NA | NA |
| | | | | For Shade Widths to 84" | 144" | 144" | 144" | 60" | 114" | 144" | 144" | 144" | 144" | 144" | 144" | 120" |
| | | | | For Shade Widths to 90" | 144" | 138" | 138" | 42" | 114" | 138" | 138" | 144" | 144" | 144" | 144" | 120" |
| | | | | For Shade Widths to 108" | 144" | 114" | 114" | NA | 66" | 114" | 96" | 144" | 144" | 144" | 144" | 120" |
| | | | | For Shade Widths over 108" | 144" | NA | NA | NA | 48" | 114" | 96" | 144" | 144" | 144" | 144" | 120" |
| Sheerweave 7250R | 118" | NO | NO | Non-Railroaded | | | | | | | | | | | | |
| | | | | Maximum Width | 96" | 96" | 96" | 96" | 96" | 96" | 96" | 96" | 96" | 96" | 96" | 96" |
| | | | | | Maximum Height | | | | | | | | | Maximum Height | | |
| | | | | For Shade Widths to 78" | 120" | 120" | 120" | 78" | 120" | 120" | 120" | 120" | 120" | NA | NA | NA |
| | | | | For Shade Widths to 84" | 120" | 120" | 120" | 78" | 120" | 120" | 120" | 120" | 120" | 120" | 120" | 120" |
| | | | | For Shade Widths to 90" | 120" | 120" | 120" | 72" | 120" | 120" | 120" | 120" | 120" | 120" | 120" | 120" |
| | | | | For Shade Widths over 90" | 120" | 120" | 120" | 48" | 120" | 120" | 120" | 120" | 120" | 120" | 120" | 120" |
| Sheerweave 7400 | 118" | NO | NO | Non-Railroaded | | | | | | | | | | | | |
| | | | | Maximum Width | 116" | 108" | 108" | 84" | 108" | 108" | 116" | 116" | 116" | 116" | 116" | 116" |
| | | | | | Maximum Height | | | | | | | | | Maximum Height | | |
| | | | | For Shade Widths to 66" | 144" | 132" | 132" | 42" | 108" | 132" | 114" | 144" | 144" | NA | NA | NA |
| | | | | For Shade Widths to 72" | 144" | 132" | 132" | 42" | 84" | 132" | 114" | 144" | 144" | NA | NA | NA |
| | | | | For Shade Widths to 84" | 144" | 126" | 126" | 42" | 84" | 126" | 114" | 144" | 144" | 144" | 144" | 90" |
| | | | | For Shade Widths to 90" | 144" | 96" | 96" | NA | 84" | 96" | 96" | 144" | 144" | 144" | 144" | 90" |
| | | | | For Shade Widths to 96" | 144" | 84" | 84" | NA | 78" | 84" | 78" | 144" | 144" | 144" | 144" | 90" |
| | | | | For Shade Widths to 102" | 144" | 60" | 60" | NA | 60" | 60" | 66" | 144" | 144" | 144" | 144" | 90" |
| | | | | For Shade Widths over 102" | 144" | 48" | 48" | NA | 48" | 48" | 66" | 144" | 114" | 144" | 144" | 90" |
| Sheerweave 7450 | 118" | NO | NO | Non-Railroaded | | | | | | | | | | | | |
| | | | | Maximum Width | 118" | 108" | 108" | 96" | 118" | 118" | 118" | 118" | 118" | 118" | 118" | 118" |
| | | | | | Maximum Height | | | | | | | | | Maximum Height | | |
| | | | | For Shade Widths to 78" | 144" | 144" | 144" | 66" | 144" | 144" | 144" | 144" | 144" | NA | NA | NA |
| | | | | For Shade Widths to 84" | 144" | 144" | 144" | 66" | 132" | 144" | 144" | 144" | 144" | 144" | 144" | 138" |
| | | | | For Shade Widths to 90" | 144" | 144" | 144" | 66" | 132" | 144" | 144" | 144" | 144" | 144" | 144" | 138" |
| | | | | For Shade Widths to 96" | 144" | 144" | 144" | 48" | 132" | 144" | 144" | 144" | 144" | 144" | 144" | 138" |
| | | | | For Shade Widths to 108" | 144" | 138" | 138" | NA | 108" | 138" | 108" | 144" | 144" | 144" | 144" | 138" |
| | | | | For Shade Widths over 108" | 144" | 138" | 138" | NA | 60" | 138" | 60" | 144" | 144" | 144" | 144" | 138" |
| Sheerweave 7500 | 118" | NO | NO | Non-Railroaded | | | | | | | | | | | | |
| | | | | Maximum Width | 96" | NA | 96" | 90" | 96" | 96" | 96" | 96" | 96" | 96" | 96" | 96" |
| | | | | | Maximum Height | | | | | | | | | Maximum Height | | |
| | | | | For Shade Widths to 66" | 120" | NA | 120" | 108" | 120" | 120" | 120" | 120" | 120" | N/A | NA | NA |
| | | | | For Shade Widths to 72" | 120" | NA | 120" | 108" | 120" | 120" | 120" | 120" | 120" | NA | NA | NA |
| | | | | For Shade Widths to 78" | 120" | NA | 120" | 84" | 120" | 120" | 120" | 120" | 120" | NA | NA | NA |
| | | | | For Shade Widths to 84" | 120" | NA | 120" | 60" | 120" | 120" | 120" | 120" | 120" | 120" | 120" | 120" |
| | | | | For Shade Widths to 90" | 120" | NA | 120" | 42" | 120" | 120" | 120" | 120" | 120" | 120" | 120" | 120" |
| | | | | For Shade Widths over 90" | 120" | NA | 120" | NA | 108" | 120" | 120" | 120" | 120" | 120" | 120" | 120" |
| Sheerweave 7500R | 118" | NO | NO | Non-Railroaded | | | | | | | | | | | | |
| | | | | Maximum Width | 118" | NA | 108" | 90" | 114" | 118" | 118" | 118" | 118" | 118" | 118" | 118" |
| | | | | | Maximum Height | | | | | | | | | Maximum Height | | |
| | | | | For Shade Widths to 66" | 144" | NA | 144" | 108" | 144" | 144" | 144" | 144" | 144" | NA | NA | NA |
| | | | | For Shade Widths to 72" | 144" | NA | 144" | 108" | 144" | 144" | 144" | 144" | 144" | NA | NA | NA |
| | | | | For Shade Widths to 78" | 144" | NA | 144" | 84" | 144" | 144" | 144" | 144" | 144" | NA | NA | NA |
| | | | | For Shade Widths to 84" | 144" | NA | 144" | 60" | 144" | 144" | 144" | 144" | 144" | 144" | 144" | 144" |
| | | | | For Shade Widths to 90" | 144" | NA | 144" | 42" | 138" | 144" | 144" | 144" | 144" | 144" | 144" | 144" |
| | | | | For Shade Widths to 108" | 144" | NA | 144" | NA | 66" | 144" | 144" | 144" | 144" | 144" | 144" | 144" |
| | | | | For Shade Widths over 108" | 144" | NA | NA | NA | 48" | 144" | 144" | 144" | 144" | 144" | 144" | 144" |

# PRODUCT SIZE SPECIFICATIONS – CLUTCH LIFT

**Minimum and Maximum Standards**
**For shades 12" wide, maximum length is 60"**
**All Patterns – Minimum Width: 12"  Minimum Height: 12".**
**Spring Assist strongly recommended on shade sizes over 80" x 80".**
**For TouchLift Cordless specifications, please refer to Product Specifications – Touch Lift section.**

Please Note:  Shade sizes that are wider than the fabric roll width indicated will be made with the fabric turned width for length (railroaded). The maximum width for non-railroaded shades is the roll width unless otherwise noted.

Fabrics turned width for length will have a visible seam when fabricated longer than their maximum roll width less 10".
Fabrics turned width for length may have an edge curl.  This is not considered a defect in the product.

| Material Name | Roll Width | Railroad Option | Splice/ Seam | | Standard Clutch | Fabric Valance | Deluxe Valance | Small Cassette | Medium Cassette | Large Cassette | 3" Fascia | 4" Fascia | Pocket Headrail | Spring Assist Clutch Standard Shade | Spring Assist Clutch 4" Fascia | Spring Assist Clutch Pocket |
|---|---|---|---|---|---|---|---|---|---|---|---|---|---|---|---|---|
| **Sheerweave 7600** | **118"** | NO | NO | **Non-Railroaded** | | | | | | | | | | | | |
| | | | | **Maximum Width** | **118"** | **108"** | **108"** | **90"** | **114"** | **118"** | **118"** | **118"** | **118"** | **118"** | **118"** | **118"** |
| | | | | | **Maximum Height** | | | | | | | | | **Maximum Height** | | |
| | | | | **For Shade Widths to 66"** | 144" | 144" | 144" | 66" | 144" | 144" | 144" | 144" | 144" | NA | NA | NA |
| | | | | **For Shade Widths to 72"** | 144" | 144" | 144" | 66" | 126" | 144" | 144" | 144" | 144" | NA | NA | NA |
| | | | | **For Shade Widths to 78"** | 144" | 144" | 144" | 66" | 126" | 144" | 144" | 144" | 144" | NA | NA | NA |
| | | | | **For Shade Widths to 84"** | 144" | 144" | 144" | 60" | 126" | 144" | 144" | 144" | 144" | 144" | 144" | 132" |
| | | | | **For Shade Widths to 90"** | 144" | 138" | 138" | 42" | 126" | 138" | 138" | 144" | 144" | 144" | 144" | 132" |
| | | | | **For Shade Widths to 108"** | 144" | 132" | 132" | NA | 66" | 132" | 108" | 144" | 144" | 144" | 144" | 132" |
| | | | | **For Shade Widths over 108"** | 144" | NA | NA | NA | 48" | 132" | 108" | 144" | 144" | 144" | 144" | 132" |
| **Sheerweave 7650** | **118"** | NO | NO | **Non-Railroaded** | | | | | | | | | | | | |
| | | | | **Maximum Width** | **116"** | **106"** | **106"** | **96"** | **116"** | **116"** | **116"** | **116"** | **116"** | **116"** | **116"** | **116"** |
| | | | | | **Maximum Height** | | | | | | | | | **Maximum Height** | | |
| | | | | **For Shade Widths to 78"** | 144" | 144" | 144" | 108" | 144" | 144" | 144" | 144" | 144" | NA | NA | NA |
| | | | | **For Shade Widths to 84"** | 144" | 144" | 144" | 102" | 144" | 144" | 144" | 144" | 144" | 144" | 144" | 144" |
| | | | | **For Shade Widths to 90"** | 144" | 144" | 144" | 72" | 144" | 144" | 144" | 144" | 144" | 144" | 144" | 144" |
| | | | | **For Shade Widths to 96"** | 144" | 144" | 144" | 48" | 144" | 144" | 144" | 144" | 144" | 144" | 144" | 144" |
| | | | | **For Shade Widths to 106"** | 144" | 108" | 108" | NA | 108" | 108" | 144" | 144" | 144" | 144" | 144" | 144" |
| | | | | **For Shade Widths over 106"** | 144" | N/A | N/A | NA | 60" | 96" | 144" | 144" | 144" | 144" | 144" | 144" |
| **Sheerweave 7700R** | **118"** | NO | NO | **Non-Railroaded** | | | | | | | | | | | | |
| | | | | **Maximum Width** | **118"** | **108"** | **108"** | **84"** | **108"** | **108"** | **118"** | **118"** | **118"** | **118"** | **118"** | **118"** |
| | | | | | **Maximum Height** | | | | | | | | | **Maximum Height** | | |
| | | | | **For Shade Widths to 66"** | 144" | 144" | 144" | 48" | 114" | 144" | 132" | 144" | 144" | NA | NA | NA |
| | | | | **For Shade Widths to 72"** | 144" | 144" | 144" | 48" | 96" | 144" | 132" | 144" | 144" | NA | NA | NA |
| | | | | **For Shade Widths to 84"** | 144" | 126" | 126" | 42" | 96" | 126" | 126" | 144" | 144" | 144" | 144" | 102" |
| | | | | **For Shade Widths to 90"** | 144" | 102" | 102" | NA | 96" | 102" | 96" | 144" | 144" | 144" | 144" | 102" |
| | | | | **For Shade Widths to 96"** | 144" | 102" | 102" | NA | 78" | 102" | 78" | 144" | 144" | 144" | 144" | 102" |
| | | | | **For Shade Widths to 102"** | 144" | 60" | 60" | NA | 60" | 60" | 78" | 144" | 144" | 144" | 144" | 102" |
| | | | | **For Shade Widths over 102"** | 144" | 48" | 48" | NA | 48" | 48" | 78" | 144" | 114" | 144" | 144" | 102" |
| **Sheerweave 7750R** | **118"** | NO | NO | **Non-Railroaded** | | | | | | | | | | | | |
| | | | | **Maximum Width** | **98"** | **98"** | **98"** | **90"** | **98"** | **98"** | **98"** | **98"** | **98"** | **98"** | **98"** | **98"** |
| | | | | | **Maximum Height** | | | | | | | | | **Maximum Height** | | |
| | | | | **For Shade Widths to 66"** | 120" | 120" | 120" | 72" | 120" | 120" | 120" | 120" | 120" | N/A | NA | NA |
| | | | | **For Shade Widths to 72"** | 120" | 120" | 120" | 72" | 120" | 120" | 120" | 120" | 120" | NA | NA | NA |
| | | | | **For Shade Widths to 78"** | 120" | 120" | 120" | 72" | 120" | 120" | 120" | 120" | 120" | NA | NA | NA |
| | | | | **For Shade Widths to 84"** | 120" | 120" | 120" | 60" | 120" | 120" | 120" | 120" | 120" | 120" | 120" | 120" |
| | | | | **For Shade Widths to 90"** | 120" | 120" | 120" | 42" | 120" | 120" | 120" | 120" | 120" | 120" | 120" | 120" |
| | | | | **For Shade Widths over 90"** | 120" | 120" | 120" | NA | 84" | 120" | 114" | 120" | 120" | 120" | 120" | 120" |
| **Sorrento** | **108"** | **NO** | **NO** | **Non-Railroaded** | | | | | | | | | | | | |
| | | | | **Maximum Width** | **108"** | **100"** | **100"** | **96"** | **108"** | **108"** | **108"** | **108"** | **108"** | **108"** | **108"** | **108"** |
| | | | | | **Maximum Height** | | | | | | | | | **Maximum Height** | | |
| | | | | **For Shade Widths to 90 "** | 144" | 144" | 144" | 54" | 108" | 144" | 144" | 144" | 144" | 144" | 144" | 114" |
| | | | | **For Shade Widths to 96 "** | 144" | 144" | 144" | 48" | 108" | 144" | 144" | 144" | 144" | 144" | 144" | 114" |
| | | | | **For Shade Widths over 96"** | 144" | 108" | 108" | NA | 108" | 108" | 90" | 144" | 144" | 144" | 144" | 114" |
| **Sunscreen (SW) 7000** | **118"** | **YES** | **YES** | **Non-Railroaded** | | | | | | | | | | | | |
| | | | | **Maximum Width** | **118"**** | **108"**** | **108"**** | **84"** | **108"**** | **108"**** | **108"**** | **118"**** | **118"**** | **118"**** | **118"**** | **118"**** |
| | | | | **R Series clutch - max width - 96" | | | | | **Maximum Height** | | | | | | **Maximum Height** | |
| | | | | **For Shade Widths to 66"** | 144" | 144" | 144" | 48" | 114" | 144" | 132 | 144" | 144" | NA | NA | NA |
| | | | | **For Shade Widths to 72"** | 144" | 144" | 144" | 48" | 96" | 144" | 132 | 144" | 144" | NA | NA | NA |
| | | | | **For Shade Widths to 84"** | 144" | 126" | 126" | 42" | 96" | 126" | 126" | 144" | 144" | 144" | 144" | 102" |
| | | | | **For Shade Widths to 90"** | 144" | 96" | 96" | NA | 96" | 96" | 96" | 144" | 144" | 144" | 144" | 102" |
| | | | | **For Shade Widths to 96"** | 144" | 96" | 96" | NA | 78" | 96" | 78" | 144" | 144" | 144" | 144" | 102" |
| | | | | **For Shade Widths to 102"** | 144" | 60" | 60" | NA | 60" | 60" | 60" | 144" | 144" | 144" | 144" | 102" |
| | | | | **For Shade Widths over 102"** | 144" | 48" | 48" | NA | 48" | 48" | 48" | 144" | 144" | 144" | 144" | 102" |
| | | | | **Railroaded** | | | | | | | | | | | | |
| | | | | **Maximum Width** | **144"**** | **108"**** | **108"**** | **84"** | **108"**** | **108"**** | **108"**** | **144"**** | **144"**** | **144"**** | **144"**** | **144"**** |
| | | | | **R Series clutch - max width - 96" | | | | | **Maximum Height** | | | | | | **Maximum Height** | |
| | | | | **For Shade Widths to 66"** | 144" | 144" | 144" | 48" | 114" | 144" | 132 | 144" | 144" | NA | NA | NA |
| | | | | **For Shade Widths to 72"** | 144" | 144" | 144" | 48" | 96" | 144" | 132 | 144" | 144" | NA | NA | NA |
| | | | | **For Shade Widths to 84"** | 144" | 126" | 126" | 42" | 96" | 126" | 126" | 144" | 144" | 144" | 144" | 102" |
| | | | | **For Shade Widths to 90"** | 144" | 96" | 96" | NA | 96" | 96" | 96" | 144" | 144" | 144" | 144" | 102" |
| | | | | **For Shade Widths to 96"** | 144" | 96" | 96" | NA | 78" | 96" | 78" | 144" | 144" | 144" | 144" | 102" |
| | | | | **For Shade Widths to 102"** | 144" | 60" | 60" | NA | 60" | 60" | 60" | 144" | 144" | 144" | 144" | 102" |
| | | | | **For Shade Widths to 108"** | 144" | 48" | 48" | NA | 48" | 48" | 48" | 144" | 144" | 144" | 144" | 102" |
| | | | | **For Shade Widths to 118"** | 144" | NA | NA | NA | NA | NA | NA | 144" | 114" | 144" | 144" | 102" |
| | | | | **For Shade Widths over 118"** | 144 | NA | NA | NA | NA | NA | NA | 144" | 102" | 144" | 144" | 102" |

# PRODUCT SIZE SPECIFICATIONS – CLUTCH LIFT

**Minimum and Maximum Standards**
**For shades 12" wide, maximum length is 60"**
**All Patterns – Minimum Width: 12"  Minimum Height: 12".**
**Spring Assist strongly recommended on shade sizes over 80" x 80".**
**For TouchLift Cordless specifications, please refer to Product Specifications – Touch Lift section.**

Please Note:  Shade sizes that are wider than the fabric roll width indicated will be made with the fabric turned width for length (railroaded). The maximum width for non-railroaded shades is the roll width unless otherwise noted.

Fabrics turned width for length will have a visible seam when fabricated longer than their maximum roll width less 10".
Fabrics turned width for length may have an edge curl.  This is not considered a defect in the product.

| Material Name | Roll Width | Railroad Option | Splice/ Seam | | Standard Clutch | Fabric Valance | Deluxe Valance | Small Cassette | Medium Cassette | Large Cassette | 3" Fascia | 4" Fascia | Pocket Headrail | Spring Assist Clutch Standard Shade | Spring Assist Clutch 4" Fascia | Spring Assist Clutch Pocket |
|---|---|---|---|---|---|---|---|---|---|---|---|---|---|---|---|---|
| Tundra | 94" | NO | NO | Non-Railroaded | | | | | | | | | | | | |
| | | | | Maximum Width | 94" | 84" | 84" | 94" | 94" | 94" | 94" | 94" | 94" | 94" | 94" | 94" |
| | | | | | Maximum Height | | | | | | | | | Maximum Height | | |
| | | | | For Shade Widths to 78" | 144" | 144" | 144" | 108" | 144" | 144" | 144" | 144" | 144" | NA | NA | NA |
| | | | | For Shade Widths to 84" | 144" | 144" | 144" | 102" | 144" | 144" | 144" | 144" | 144" | 144" | 144" | 144" |
| | | | | For Shade Widths over 84" | 144" | NA | NA | 48" | 144" | 144" | 144" | 144" | 144" | 144" | 144" | 144" |
| Tundra Blackout | 94" | NO | NO | Non-Railroaded | | | | | | | | | | | | |
| | | | | Maximum Width | 94" | 84" | 84" | 90" | 94" | 94" | 94" | 94" | 94" | 94" | 94" | 94" |
| | | | | | Maximum Height | | | | | | | | | Maximum Height | | |
| | | | | For Shade Widths to 66" | 120" | 120" | 120" | 78" | 120" | 120" | 120" | 120" | 120" | N/A | NA | NA |
| | | | | For Shade Widths to 72" | 120" | 120" | 120" | 78" | 120" | 120" | 120" | 120" | 120" | NA | NA | NA |
| | | | | For Shade Widths to 78" | 120" | 120" | 120" | 78" | 120" | 120" | 120" | 120" | 120" | NA | NA | NA |
| | | | | For Shade Widths to 84" | 120" | 120" | 120" | 60" | 120" | 120" | 120" | 120" | 120" | 120" | 120" | 120" |
| | | | | For Shade Widths to 90" | 120" | NA | NA | 42" | 120" | 120" | 120" | 120" | 120" | 120" | 120" | 120" |
| | | | | For Shade Widths over 90" | 120" | NA | NA | NA | 108" | 120" | 120" | 120" | 120" | 120" | 120" | 120" |
| Uptown (R79_02) | 78" | YES | NO | Non-Railroaded | | | | | | | | | | | | |
| | | | | Maximum Width | 78" | 66" | 66" | 78" | 78" | 78" | 78" | 78" | 78" | NA | NA | NA |
| | | | | | Maximum Height | | | | | | | | | Maximum Height | | |
| | | | | For Shade Widths to 66" | 144" | 144" | 144" | 126" | 144" | 144" | 144" | 144" | 144" | NA | NA | NA |
| | | | | For Shade Widths over 66" | 144" | NA | NA | 126" | 144" | 144" | 144" | 144" | 144" | NA | NA | NA |
| | | | | Railroaded | | | | | | | | | | | | |
| | | | | Maximum Width | 144"** | 126" | 126" | 120" | 126" | 126" | 126" | 144"** | 144"** | NA | NA | NA |
| | | | | **R Series clutch - max width - 126" | Maximum Height | | | | | | | | | Maximum Height | | |
| | | | | For Shade Widths to 96" | 68" | 68" | 68" | 66" | 68" | 68" | 68" | 68" | 68" | NA | NA | NA |
| | | | | For Shade Widths over 96" | 66" | 66" | 66" | 66" | 66" | 66" | 66" | 66" | 66" | NA | NA | NA |
| Uptown Room Darkening (R79_01) | 78" | YES | NO | Non-Railroaded | | | | | | | | | | | | |
| | | | | Maximum Width | 78" | 66" | 66" | 78" | 78" | 78" | 78" | 78" | 78" | NA | NA | NA |
| | | | | | Maximum Height | | | | | | | | | Maximum Height | | |
| | | | | For Shade Widths to 66" | 144" | 144" | 144" | 96" | 144" | 144" | 144" | 144" | 144" | NA | NA | NA |
| | | | | For Shade Widths to 72" | 144" | NA | NA | 96" | 144" | 144" | 144" | 144" | 144" | NA | NA | NA |
| | | | | For Shade Widths over 72" | 144" | NA | NA | 84" | 144" | 144" | 144" | 144" | 144" | NA | NA | NA |
| | | | | Railroaded | | | | | | | | | | | | |
| | | | | Maximum Width | 144"*** | 120" | 120" | 114" | 120" | 120" | 120" | 144"** | 144"** | 144"** | 144"** | 144"** |
| | | | | **R Series clutch - max width - 120" | Maximum Height | | | | | | | | | Maximum Height | | |
| | | | | For Shade Widths to 72" | 68" | 68" | 68" | 68" | 68" | 68" | 68" | 68" | 68" | NA | NA | NA |
| | | | | For Shade Widths to 84" | 68" | 68" | 68" | 60" | 68" | 68" | 68" | 68" | 68" | NA | NA | NA |
| | | | | For Shade Widths to 96" | 68" | 68" | 68" | 48" | 68" | 68" | 68" | 68" | 68" | NA | NA | NA |
| | | | | For Shade Widths over 96" | 66" | 66" | 66" | 48" | 66" | 66" | 66" | 66" | 66" | NA | NA | NA |
| World Textures 1 | 78" | YES | YES | Non-Railroaded | | | | | | | | | | | | |
| | | | | Maximum Width | 78" | 66" | 66" | 78" | 78" | 78" | 78" | 78" | 78" | NA | NA | NA |
| | | | | | Maximum Height | | | | | | | | | Maximum Height | | |
| | | | | For Shade Widths to 66" | 144" | 144" | 144" | 66" | 144" | 144" | 144" | 144" | 144" | NA | NA | NA |
| | | | | For Shade Widths over 66" | 144" | NA | NA | 66" | 126" | 144" | 144" | 144" | 144" | NA | NA | NA |
| | | | | Railroaded | | | | | | | | | | | | |
| | | | | Maximum Width | 144"*** | 120" | 120" | 90" | 120" | 120" | 120" | 144"** | 144"** | 144"** | 144"** | 144"** |
| | | | | **R Series clutch - max width - 120" | Maximum Height | | | | | | | | | Maximum Height | | |
| | | | | For Shade Widths to 66" | 144" | 144" | 144" | 66" | 144" | 144" | 144" | 144" | 144" | NA | NA | NA |
| | | | | For Shade Widths to 78" | 144" | 144" | 144" | 66" | 126" | 144" | 144" | 144" | 144" | NA | NA | NA |
| | | | | For Shade Widths over 78" | 144" | 132" | 132" | 42" | 60" | 132" | 108" | 144" | 132" | 144" | 144" | 132" |
| World Textures 1 Blackout | 78" | YES | YES | Non-Railroaded | | | | | | | | | | | | |
| | | | | Maximum Width | 78" | 66" | 66" | 78" | 78" | 78" | 78" | 78" | 78" | NA | NA | NA |
| | | | | | Maximum Height | | | | | | | | | Maximum Height | | |
| | | | | For Shade Widths to 66" | 144" | 144" | 144" | 60" | 144" | 144" | 144" | 144" | 144" | NA | NA | NA |
| | | | | For Shade Widths over 66" | 144" | NA | NA | 60" | 114" | 144" | 144" | 144" | 144" | NA | NA | NA |
| | | | | Railroaded | | | | | | | | | | | | |
| | | | | Maximum Width | 144"*** | 120" | 120" | 90" | 120" | 120" | 120 | 144"** | 144"** | 144"** | 144"** | 144"** |
| | | | | **R Series clutch - max width - 120" | Maximum Height | | | | | | | | | Maximum Height | | |
| | | | | For Shade Widths to 66" | 144" | 144" | 144" | 60" | 144" | 144" | 144" | 144" | 144" | NA | NA | NA |
| | | | | For Shade Widths to 78" | 144" | 144" | 144" | 60" | 114" | 144" | 144" | 144" | 144" | NA | NA | NA |
| | | | | For Shade Widths over 78" | 144" | 120" | 120" | 42" | 54" | 120" | 96" | 144" | 120" | 144" | 144" | 120" |

# PRODUCT SIZE SPECIFICATIONS – CLUTCH LIFT

**Minimum and Maximum Standards**
**For shades 12" wide, maximum length is 60"**
**All Patterns – Minimum Width: 12"  Minimum Height: 12".**
**Spring Assist strongly recommended on shade sizes over 80" x 80".**
**For TouchLift Cordless specifications, please refer to Product Specifications – Touch Lift section.**

Please Note:  Shade sizes that are wider than the fabric roll width indicated will be made with the fabric turned width for length (railroaded). The maximum width for non-railroaded shades is the roll width unless otherwise noted.

Fabrics turned width for length will have a visible seam when fabricated longer than their maximum roll width less 10".
Fabrics turned width for length may have an edge curl.  This is not considered a defect in the product.

| Material Name | Roll Width | Railroad Option | Splice/ Seam | | Standard Clutch | Fabric Valance | Deluxe Valance | Small Cassette | Medium Cassette | Large Cassette | 3" Fascia | 4" Fascia | Pocket Headrail | Spring Assist Clutch | | |
|---|---|---|---|---|---|---|---|---|---|---|---|---|---|---|---|---|
| | | | | | | | | | | | | | | Standard Shade | 4" Fascia | Pocket |
| World Textures 2 | 80" | YES | YES | Non-Railroaded | | | | | | | | | | | | |
| | | | | Maximum Width | 80" | 70" | 70 | 80" | 80" | 80" | 80" | 80" | 80" | 80" | 80" | 80" |
| | | | | | Maximum Height | | | | | | | | | Maximum Height | | |
| | | | | For Shade Widths to 70" | 144" | 132" | 132" | 42" | 108" | 132" | 120" | 144" | 144" | NA | NA | NA |
| | | | | For Shade Widths to 72" | 144" | NA | NA | 42" | 108" | 132" | 120" | 144" | 144" | NA | NA | NA |
| | | | | For Shade Widths to 78" | 144" | NA | NA | 42" | 84" | 132" | 120" | 144" | 144" | NA | NA | NA |
| | | | | For Shade Widths over 78" | 144" | NA | NA | 42" | 84" | 132" | 120" | 144" | 144" | 144" | 144" | 90" |
| | | | | Railroaded | | | | | | | | | | | | |
| | | | | Maximum Width | 144"** | 120" | 120" | 90" | 114" | 120" | 120" | 144"** | 144"** | 144"** | 144"** | 144"** |
| | | | | **R Series clutch - max width - 120" | Maximum Height | | | | | | | | | Maximum Height | | |
| | | | | For Shade Widths to 72" | 144" | 132" | 132" | 42" | 108" | 132" | 120" | 144" | 144" | NA | NA | NA |
| | | | | For Shade Widths to 78" | 144" | 132" | 132" | 42" | 84" | 132" | 120" | 144" | 144" | NA | NA | NA |
| | | | | For Shade Widths to 80" | 144" | 132" | 132" | 42" | 84" | 132" | 120" | 144" | 144" | 144" | 144" | 90" |
| | | | | For Shade Widths over 80" | 144 | 84" | 84" | 42" | 48" | 84" | 72" | 144" | 90" | 144" | 144" | 90" |
| World Textures 2 Blackout | 80" | YES | YES | Non-Railroaded | | | | | | | | | | | | |
| | | | | Maximum Width | 80" | 70" | 70" | 80" | 80" | 80" | 80" | 80" | 80" | 80" | 80" | 80" |
| | | | | | Maximum Height | | | | | | | | | Maximum Height | | |
| | | | | For Shade Widths to 70" | 144" | 144" | 144" | 60" | 114" | 144" | 144" | 144" | 144" | NA | NA | NA |
| | | | | For Shade Widths to 78" | 144" | NA | NA | 60" | 114" | 144" | 144" | 144" | 144" | NA | NA | NA |
| | | | | For Shade Widths over 78" | 144" | NA | NA | 60" | 114" | 144" | 144" | 144" | 144" | 144" | 144" | 120" |
| | | | | Railroaded | | | | | | | | | | | | |
| | | | | Maximum Width | 144"** | 120" | 120" | 90" | 120" | 120" | 120 | 144"** | 144"** | 144"** | 144"** | 144"** |
| | | | | **R Series clutch - max width - 120" | Maximum Height | | | | | | | | | Maximum Height | | |
| | | | | For Shade Widths to 78" | 144" | 144" | 144" | 60" | 114" | 144" | 144" | 144" | 144" | NA | NA | NA |
| | | | | For Shade Widths to 80" | 144" | 144" | 144" | 60" | 114" | 144" | 144" | 144" | 144" | 144" | 144" | 120" |
| | | | | For Shade Widths over 80" | 144" | 120" | 120" | 42" | 54" | 120" | 96" | 144" | 120" | 144" | 144" | 120" |

# PRODUCT SIZE SPECIFICATIONS – TOUCHLIFT

| Minimum shade width – 18"<br>Minimum shade height – 24"<br>Fabric Wrapped Bottomrail Shades over 42" will have 2 handles | | | | No Top Treatment | | | | Deluxe Valance | | | | Fabric Valance | | | |
|---|---|---|---|---|---|---|---|---|---|---|---|---|---|---|---|
| | | | | Non-Railroaded | | Railroaded | | Non-Railroaded | | Railroaded | | Non-Railroaded | | Railroaded | |
| Material Name | Roll Width | RailRoad Option | Splice/ Seam | MAX WIDTH | MAX HEIGHT | MAX WIDTH | MAX HEIGHT | MAX WIDTH | MAX HEIGHT | MAX WIDTH | MAX HEIGHT | MAX WIDTH | MAX HEIGHT | MAX WIDTH | MAX HEIGHT |
| 1% E Screen | 122" | YES | YES | 84" | 84" | 84" | 84" | 84" | 84" | 84" | 84" | 84" | 84" | 84" | 84" |
| 1% Sheerweave 2500 | 126" | YES | YES | 84" | 84" | 84" | 84" | 84" | 84" | 84" | 84" | 84" | 84" | 84" | 84" |
| 1% Sheerweave 2701 | 126" | YES | YES | 84" | 84" | 84" | 84" | 84" | 84" | 84" | 84" | 84" | 84" | 84" | 84" |
| 1% Sheerweave 4901 | 98" | NO | NO | 84" | 84" | N/A | N/A | 84" | 84" | N/A | N/A | 84" | 84" | N/A | N/A |
| 1% Sheerweave 5000 | 98" | NO | NO | 84" | 84" | N/A | N/A | 84" | 84" | N/A | N/A | 84" | 84" | N/A | N/A |
| 1% Toka | 118" | YES | YES | 84" | 84" | 84" | 84" | 84" | 84" | 84" | 84" | 84" | 84" | 84" | 84" |
| 3% E Screen | 122" | YES | YES | 84" | 84" | 84" | 84" | 84" | 84" | 84" | 84" | 84" | 84" | 84" | 84" |
| 3% M Screen | 122" | YES | YES | 84" | 84" | 84" | 84" | 84" | 84" | 84" | 84" | 84" | 84" | 84" | 84" |
| 3% Sheerweave 2410 | 126" | YES | YES | 84" | 84" | 84" | 84" | 84" | 84" | 84" | 84" | 84" | 84" | 84" | 84" |
| 3% Sheerweave 2703 | 126" | YES | YES | 84" | 84" | 84" | 84" | 84" | 84" | 84" | 84" | 84" | 84" | 84" | 84" |
| 3% Sheerweave 4400 | 126" | YES | YES | 84" | 84" | 84" | 84" | 84" | 84" | 84" | 84" | 84" | 84" | 84" | 84" |
| 3% Sheerweave 4600 | 126" | YES | YES | 84" | 84" | 84" | 84" | 84" | 84" | 84" | 84" | 84" | 84" | 84" | 84" |
| 3% Sheerweave 4903 | 98" | NO | NO | 84" | 84" | N/A | N/A | 84" | 84" | N/A | N/A | 84" | 84" | N/A | N/A |
| 3% Sheerweave 5000<br>*(R07_02, 04, 05, 07, 10)* | 98" | NO | NO | 84" | 84" | N/A | N/A | 84" | 84" | N/A | N/A | 84" | 84" | N/A | N/A |
| 3% Sheerweave 5000<br>*(R07_R11, R89, R90, R93, U10, U11 )* | 98" | NO | NO | 84" | 84" | N/A | N/A | 84" | 84" | N/A | N/A | 84" | 84" | N/A | N/A |
| 3% T Screen | 98" | YES | NO | 84" | 84" | 84" | 84" | 84" | 84" | 84" | 84" | 84" | 84" | 84" | 84" |
| 4% S Screen | 122" | NO | NO | 84" | 84" | N/A | N/A | 84" | 84" | N/A | N/A | 84" | 84" | N/A | N/A |
| 4% Silver Screen | 94" | YES | YES | 84" | 84" | 84" | 84" | 84" | 84" | 84" | 84" | 84" | 84" | 84" | 84" |
| 5% E Screen | 122" | YES | YES | 84" | 84" | 84" | 84" | 84" | 84" | 84" | 84" | 84" | 84" | 84" | 84" |
| 5% M Screen Deco | 98" | YES | YES | 84" | 84" | 84" | 84" | 84" | 84" | 84" | 84" | 84" | 84" | 84" | 84" |
| 5% Sheerweave 2000 | 126" | YES | YES | 84" | 84" | 84" | 84" | 84" | 84" | 84" | 84" | 84" | 84" | 84" | 84" |
| 5% Sheerweave 2390 | 126" | YES | YES | 84" | 84" | 84" | 84" | 84" | 84" | 84" | 84" | 84" | 84" | 84" | 84" |
| 5% Sheerweave 2705 | 126" | NO | NO | 84" | 84" | N/A | N/A | 84" | 84" | N/A | N/A | 84" | 84" | N/A | N/A |
| 5% Sheerweave 4000 | 126" | YES | YES | 84" | 84" | 84" | 84" | 84" | 84" | 84" | 84" | 84" | 84" | 84" | 84" |
| 5% Sheerweave 4500 | 126" | YES | YES | 84" | 84" | 84" | 84" | 84" | 84" | 84" | 84" | 84" | 84" | 84" | 84" |
| 5% Sheerweave 5000<br>*(R10_01, 03, 06, 07, 09, 10, 11, 12, 13,14, 15, 16, 17, 18, 19, 20, 21)* | 98" | NO | NO | 84" | 84" | N/A | N/A | 84" | 84" | N/A | N/A | 84" | 84" | N/A | N/A |
| 5% Sheerweave 5000<br>(R10_Q51, S77, S84) | 98" | NO | NO | 84" | 84" | N/A | N/A | 84" | 84" | N/A | N/A | 84" | 84" | N/A | N/A |
| 5% Sheerweave 5000<br>*(R10_Q43, S82)* | 98" | NO | NO | 84" | 84" | N/A | N/A | 84" | 84" | N/A | N/A | 84" | 84" | N/A | N/A |
| 7% Global Screen | 118" | YES | YES | 84" | 84" | 84" | 84" | 84" | 84" | 84" | 84" | 84" | 84" | 84" | 84" |
| 7% Sheerweave 5000<br>*(R34_Q46)* | 98" | NO | NO | 84" | 84" | N/A | N/A | 84" | 84" | N/A | N/A | 84" | 84" | N/A | N/A |
| 7% Sheerweave 5000<br>*(R34_08, 09)* | 98" | NO | NO | 84" | 84" | N/A | N/A | 84" | 84" | N/A | N/A | 84" | 84" | N/A | N/A |
| 7% Sheerweave 5000<br>*(R34_S73)* | 98" | NO | NO | 84" | 84" | N/A | N/A | 84" | 84" | N/A | N/A | 84" | 84" | N/A | N/A |
| 10% E Screen | 122" | YES | YES | 84" | 84" | 84" | 84" | 84" | 84" | 84" | 84" | 84" | 84" | 84" | 84" |
| 10% Sheerweave 2360 | 126" | NO | NO | 84" | 84" | N/A | N/A | 84" | 84" | N/A | N/A | 84" | 84" | N/A | N/A |
| 10% Sheerweave 4100 | 98" | YES | YES | 84" | 84" | 84" | 84" | 84" | 84" | 84" | 84" | 84" | 84" | 84" | 84" |
| 10% Sheerweave 5000<br>*(R26_03)* | 98" | NO | NO | 84" | 84" | N/A | N/A | 84" | 84" | N/A | N/A | 84" | 84" | N/A | N/A |
| 10% Sheerweave 5000<br>*(R26_U16, U24, U28, U29)* | 98" | NO | NO | 84" | 84" | N/A | N/A | 84" | 84" | N/A | N/A | 84" | 84" | N/A | N/A |
| Alexandria | 78" | NO | NO | 78" | 84" | N/A | N/A | 68" | 84" | N/A | N/A | 68" | 84" | N/A | N/A |
| Astaire | 94" | NO | NO | 84" | 84" | N/A | N/A | N/A | N/A | N/A | N/A | N/A | N/A | N/A | N/A |
| Avila R Blackout | 118" | YES | YES | 84" | 84" | 84" | 84" | 84" | 84" | 84" | 84" | 84" | 84" | 84" | 84" |
| Baroque | 78" | NO | NO | 78" | 84" | N/A | N/A | 68" | 84" | N/A | N/A | 68" | 84" | N/A | N/A |
| Blackout - Solid | 72" | YES | YES | 72" | 84" | 84" | 84" | 62" | 84" | 84" | 84" | N/A | N/A | N/A | N/A |
| Brilliance | 118" | NO | NO | 84" | 84" | N/A | N/A | 84" | 84" | N/A | N/A | 84" | 84" | N/A | N/A |
| Brilliance Blackout | 118" | NO | NO | 84" | 84" | N/A | N/A | 84" | 84" | N/A | N/A | 84" | 84" | N/A | N/A |
| Carrara | 110" | NO | NO | 84" | 84" | N/A | N/A | 84" | 84" | N/A | N/A | 84" | 84" | N/A | N/A |
| Carrara Blackout | 110" | NO | NO | 84" | 84" | N/A | N/A | 84" | 84" | N/A | N/A | 84" | 84" | N/A | N/A |
| Claudio | 110" | NO | NO | 84" | 84" | N/A | N/A | 84" | 84" | N/A | N/A | 84" | 84" | N/A | N/A |
| Claudio Blackout | 110" | NO | NO | 84" | 84" | N/A | N/A | 84" | 84" | N/A | N/A | 84" | 84" | N/A | N/A |
| Cusco | 110" | YES | YES | 84" | 84" | 84" | 84" | 84" | 84" | 84" | 84" | 84" | 84" | 84" | 84" |
| Darien | 90" | NO | NO | 84" | 84" | N/A | N/A | 80" | 84" | N/A | N/A | 80" | 84" | N/A | N/A |
| Drizzle | 94" | YES | YES | 78" | 84" | 84" | 84" | 68" | 84" | 84" | 84" | 68" | 84" | 84" | 84" |
| Fiona | 78" | NO | NO | 78" | 84" | N/A | N/A | 68" | 84" | N/A | N/A | 68" | 84" | N/A | N/A |
| Flocke Blackout | 94" | YES | YES | 84" | 84" | 84" | 84" | 84" | 84" | 84" | 84" | 84" | 84" | 84" | 84" |
| Hayworth | 98" | YES | YES | 84" | 84" | 84" | 84" | 84" | 84" | 84" | 84 | 84" | 84" | 84" | 84 |
| Illusion | 72" | YES | NO | 72" | 84" | 84" | 60" | 62" | 84" | 84" | 60" | 62" | 84" | 84" | 60" |
| Jasper | 110" | YES | YES | 84" | 84" | 84" | 84" | 84" | 84" | 84" | 84" | 84" | 84" | 84" | 84" |
| Linview | 122" | YES | YES | 84" | 84" | 84" | 84" | 84" | 84" | 84" | 84" | 84" | 84" | 84" | 84" |
| Linview Blackout | 94" | NO | NO | 84" | 84" | N/A | N/A | 84" | 84" | N/A | N/A | 84" | 84" | N/A | N/A |
| Montero | 94" | NO | NO | 84" | 84" | N/A | N/A | 84" | 84" | N/A | N/A | 84" | 84" | N/A | N/A |
| Moravia | 96" | NO | NO | 84" | 84" | N/A | N/A | 84" | 84" | N/A | N/A | 84" | 84" | N/A | N/A |
| Santa Cruz | 94" | NO | NO | 84" | 84" | N/A | N/A | 84" | 84" | N/A | N/A | 84" | 84" | N/A | N/A |
| Santa Cruz Blackout | 94" | NO | NO | 84" | 84" | N/A | N/A | 84" | 84" | N/A | N/A | 84" | 84" | N/A | N/A |
| Scala Blackout | 110" | YES | YES | 84" | 84" | 84" | 84" | 84" | 84" | 84" | 84" | N/A | N/A | N/A | N/A |
| Sheerweave 7200R | 118" | NO | NO | 84" | 84" | N/A | N/A | 84" | 84" | N/A | N/A | 84" | 84" | N/A | N/A |
| Sheerweave 7250R | 118" | NO | NO | 84" | 84" | N/A | N/A | 84" | 84" | N/A | N/A | 84" | 84" | N/A | N/A |
| Sheerweave 7400 | 118" | NO | NO | 84" | 84" | N/A | N/A | 84" | 84" | N/A | N/A | 84" | 84" | N/A | N/A |
| Sheerweave 7450 | 118" | NO | NO | 84" | 84" | N/A | N/A | 84" | 84" | N/A | N/A | 84" | 84" | N/A | N/A |
| Sheerweave 7500 | 118" | NO | NO | 84" | 84" | N/A | N/A | 84" | 84" | N/A | N/A | N/A | N/A | N/A | N/A |
| Sheerweave 7500R | 118" | NO | NO | 84" | 84" | N/A | N/A | 84" | 84" | N/A | N/A | N/A | N/A | N/A | N/A |
| Sheerweave 7600 | 118" | NO | NO | 84" | 84" | N/A | N/A | 84" | 84" | N/A | N/A | 84" | 84" | N/A | N/A |
| Sheerweave 7650 | 118" | NO | NO | 84" | 84" | N/A | N/A | 84" | 84" | N/A | N/A | 84" | 84" | N/A | N/A |
| Sheerweave 7700R | 118" | NO | NO | 84" | 84" | N/A | N/A | 84" | 84" | N/A | N/A | 84" | 84" | N/A | N/A |
| Sheerweave 7750R | 118" | NO | NO | 84" | 84" | N/A | N/A | 84" | 84" | N/A | N/A | 84" | 84" | N/A | N/A |
| Sorrento | 108" | NO | NO | 84" | 84" | N/A | N/A | 84" | 84" | N/A | N/A | 84" | 84" | N/A | N/A |
| Sunscreen (SW) 7000 | 118" | YES | YES | 84" | 84" | 84" | 84" | 84" | 84" | 84" | 84" | 84" | 84" | 84" | 84" |
| Tundra | 94" | NO | NO | 84" | 84" | N/A | N/A | 84" | 84" | N/A | N/A | 84" | 84" | N/A | N/A |
| Tundra Blackout | 94" | NO | NO | 84" | 84" | N/A | N/A | 84" | 84" | N/A | N/A | 84" | 84" | N/A | N/A |
| Uptown | 78" | YES | NO | 78" | 84" | 84" | 66" | 68" | 84" | 84" | 66" | 68" | 84" | 84" | 66" |
| Uptown Room Darkening | 78" | YES | NO | 78" | 84 | 84" | 66" | 68" | 84" | 84" | 66" | 68" | 84" | 84" | 66" |
| World Textures 1 | 78" | YES | YES | 78" | 84" | 84" | 84" | 68" | 84" | 84" | 84" | 68" | 84" | 84" | 84" |
| World Textures 1 Blackout | 78" | YES | YES | 78" | 84" | 84" | 84" | 68" | 84" | 84" | 84" | 68" | 84" | 84" | 84" |
| World Textures 2 | 80" | YES | YES | 80" | 84" | 84" | 84" | 70" | 84" | 84" | 84" | 70" | 84" | 84" | 84" |
| World Textures 2 Blackout | 80" | YES | YES | 80" | 84" | 84" | 84" | 70" | 84" | 84" | 84" | 70" | 84" | 84" | 84" |

# PRODUCT SIZE SPECIFICATIONS – TOUCHLIFT

| Minimum shade width – 18"<br>Minimum shade height – 24"<br>Fabric Wrapped Bottomrail Shades over 42" will have 2 handles | | | | Medium Cassette | | | | Large Cassette | | | |
|---|---|---|---|---|---|---|---|---|---|---|---|
| | | | | Non-Railroaded | | Railroaded | | Non-Railroaded | | Railroaded | |
| Material Name | Roll Width | RailRoad Option | Splice/ Seam | MAX WIDTH | MAX HEIGHT | MAX WIDTH | MAX HEIGHT | MAX WIDTH | MAX HEIGHT | MAX WIDTH | MAX HEIGHT |
| 1% E Screen | 122" | YES | YES | 84" | 84" | 84" | 84" | 84" | 84" | 84" | 84" |
| 1% Sheerweave 2500 | 126" | YES | YES | 84" | 84" | 84" | 84" | 84" | 84" | 84" | 84" |
| 1% Sheerweave 2701 | 126" | YES | YES | 84" | 84" | 84" | 84" | 84" | 84" | 84" | 84" |
| 1% Sheerweave 4901 | 98" | NO | NO | 84" | 84" | N/A | N/A | 84" | 84" | N/A | N/A |
| 1% Sheerweave 5000 | 98" | NO | NO | 84" | 54" | N/A | N/A | 84" | 84" | N/A | N/A |
| 1% Toka | 118" | YES | YES | 84" | 84" | 84" | 84" | 84" | 84" | 84" | 84" |
| 3% E Screen | 122" | YES | YES | 84" | 84" | 84" | 84" | 84" | 84" | 84" | 84" |
| 3% M Screen | 122" | YES | YES | 84" | 84" | 84" | 84" | 84" | 84" | 84" | 84" |
| 3% Sheerweave 2410 | 126" | YES | YES | 84" | 84" | 84" | 84" | 84" | 84" | 84" | 84" |
| 3% Sheerweave 2703 | 126" | YES | YES | 84" | 84" | 84" | 84" | 84" | 84" | 84" | 84" |
| 3% Sheerweave 4400 | 126" | YES | YES | 84" | 81" | 84" | 84" | 84" | 84" | 84" | 84" |
| 3% Sheerweave 4600 | 126" | YES | YES | 84" | 84" | 84" | 84" | 84" | 84" | 84" | 84" |
| 3% Sheerweave 4903 | 98" | NO | NO | 84" | 84" | N/A | N/A | 84" | 84" | N/A | N/A |
| 3% Sheerweave 5000<br>*(R07_02, 04, 05, 07, 10)* | 98" | NO | NO | 84" | 47" | N/A | N/A | 84" | 84" | N/A | N/A |
| 3% Sheerweave 5000<br>*(R07_R11, R89, R90, R93, U10, U11 )* | 98" | NO | NO | 84" | 48" | N/A | N/A | 84" | 84" | N/A | N/A |
| 3% T Screen | 98" | YES | NO | 84" | 84" | 84" | 84" | 84" | 84" | 84" | 84" |
| 4% S Screen | 122" | NO | NO | 84" | 63" | N/A | N/A | 84" | 84" | N/A | N/A |
| 4% Silver Screen | 94" | YES | YES | 84" | 84" | 84" | 84" | 84" | 84" | 84" | 84" |
| 5% E Screen | 122" | YES | YES | 84" | 84" | 84" | 84" | 84" | 84" | 84" | 84" |
| 5% M Screen Deco | 98" | YES | YES | 84" | 84" | 84" | 84" | 84" | 84" | 84" | 84" |
| 5% Sheerweave 2000 | 126" | YES | YES | 84" | 84" | 84" | 84" | 84" | 84" | 84" | 84" |
| 5% Sheerweave 2390 | 126" | YES | YES | 84" | 84" | 84" | 84" | 84" | 84" | 84" | 84" |
| 5% Sheerweave 2705 | 126" | NO | NO | 84" | 84" | N/A | N/A | 84" | 84" | N/A | N/A |
| 5% Sheerweave 4000 | 126" | YES | YES | 84" | 84" | 84" | 84" | 84" | 84" | 84" | 84" |
| 5% Sheerweave 4500 | 126" | YES | YES | 84" | 84" | 84" | 84" | 84" | 84" | 84" | 84" |
| 5% Sheerweave 5000<br>*(R10_01, 03, 06, 07, 09, 10, 11, 12, 13,14, 15, 16, 17, 18, 19, 20, 21)* | 98" | NO | NO | 84" | 58" | N/A | N/A | 84" | 84" | N/A | N/A |
| 5% Sheerweave 5000<br>(R10_Q51, S77, S84) | 98" | NO | NO | 84" | 54" | N/A | N/A | 84" | 84" | N/A | N/A |
| 5% Sheerweave 5000<br>*(R10_Q43, S82)* | 98" | NO | NO | 84" | 66" | N/A | N/A | 84" | 84" | N/A | N/A |
| 7% Global Screen | 118" | YES | YES | 84" | 84" | 84" | 84" | 84" | 84" | 84" | 84" |
| 7% Sheerweave 5000<br>*(R34_Q46)* | 98" | NO | NO | 84" | 68" | N/A | N/A | 84" | 84" | N/A | N/A |
| 7% Sheerweave 5000<br>*(R34_08, 09)* | 98" | NO | NO | 84" | 78" | N/A | N/A | 84" | 84" | N/A | N/A |
| 7% Sheerweave 5000<br>*(R34_S73)* | 98" | NO | NO | 84" | 60" | N/A | N/A | 84" | 84" | N/A | N/A |
| 10% E Screen | 122" | YES | YES | 84" | 84" | 84" | 84" | 84" | 84" | 84" | 84" |
| 10% Sheerweave 2360 | 126" | NO | NO | 84" | 84" | N/A | N/A | 84" | 84" | N/A | N/A |
| 10% Sheerweave 4100 | 98" | YES | YES | 84" | 78" | 84" | 78" | 84" | 84" | 84" | 84" |
| 10% Sheerweave 5000<br>*(R26_03)* | 98" | NO | NO | 84" | 58" | N/A | N/A | 84" | 84" | N/A | N/A |
| 10% Sheerweave 5000<br>*(R26_U16, U24, U28, U29)* | 98" | NO | NO | 84" | 66" | N/A | N/A | 84" | 84" | N/A | N/A |
| Alexandria | 78" | NO | NO | 78" | 84" | N/A | N/A | 78" | 84" | N/A | N/A |
| Astaire | 94" | NO | NO | 84" | 84" | N/A | N/A | 84" | 84" | N/A | N/A |
| Avila R Blackout | 118" | YES | YES | 84" | 84" | 84" | 84" | 84" | 84" | 84" | 84" |
| Baroque | 78" | NO | NO | 78" | 84" | N/A | N/A | 78" | 84" | N/A | N/A |
| Blackout - Solid | 72" | YES | YES | 72" | 84" | 84" | 84" | 72" | 84" | 84" | 84" |
| Brilliance | 118" | NO | NO | 84" | 84" | N/A | N/A | 84" | 84" | N/A | N/A |
| Brilliance Blackout | 118" | NO | NO | 84" | 84" | N/A | N/A | 84" | 84" | N/A | N/A |
| Carrara | 110" | NO | NO | 84" | 84" | N/A | N/A | 84" | 84" | N/A | N/A |
| Carrara Blackout | 110" | NO | NO | 84" | 84" | N/A | N/A | 84" | 84" | N/A | N/A |
| Claudio | 110" | NO | NO | 84" | 84" | N/A | N/A | 84" | 84" | N/A | N/A |
| Claudio Blackout | 110" | NO | NO | 84" | 84" | N/A | N/A | 84" | 84" | N/A | N/A |
| Cusco | 110" | YES | YES | 84" | 84" | 84" | 84" | 84" | 84" | 84" | 84" |
| Darien | 90" | NO | NO | 84" | 84" | N/A | N/A | 84" | 84" | N/A | N/A |
| Drizzle | 78" | YES | YES | 78" | 84" | 84" | 84" | 78" | 84" | 84" | 84" |
| Fiona | 78" | NO | NO | 78" | 84" | N/A | N/A | 78" | 84" | N/A | N/A |
| Flocke Blackout | 94" | YES | YES | 84" | 84" | 84" | 84" | 84" | 84" | 84" | 84" |
| Hayworth | 98" | YES | YES | 84" | 84" | 84" | 84" | 84" | 84" | 84" | 84 |
| Illusion | 72" | YES | NO | 72" | 84" | 84" | 60" | 72" | 84" | 84" | 60" |
| Jasper | 110" | YES | YES | 84" | 84" | 84" | 84" | 84" | 84" | 84" | 84" |
| Linview | 122" | YES | YES | 84" | 84" | 84" | 84" | 84" | 84" | 84" | 84" |
| Linview Blackout | 94" | NO | NO | 84" | 84" | N/A | N/A | 84" | 84" | N/A | N/A |
| Montero | 94" | NO | NO | 84" | 84" | N/A | N/A | 84" | 84" | N/A | N/A |
| Moravia | 96" | NO | NO | 84" | 84" | N/A | N/A | 84" | 84" | N/A | N/A |
| Santa Cruz | 94" | NO | NO | 84" | 84" | N/A | N/A | 84" | 84" | N/A | N/A |
| Santa Cruz Blackout | 94" | NO | NO | 84" | 84" | N/A | N/A | 84" | 84" | N/A | N/A |
| Scala Blackout | 110" | YES | YES | 84" | 84" | 84" | 84" | 84" | 84" | 84" | 84" |
| Sheerweave 7200R | 118" | NO | NO | 84" | 84" | N/A | N/A | 84" | 84" | N/A | N/A |
| Sheerweave 7250R | 118" | NO | NO | 84" | 84" | N/A | N/A | 84" | 84" | N/A | N/A |
| Sheerweave 7400 | 118" | NO | NO | 84" | 84" | N/A | N/A | 84" | 84" | N/A | N/A |
| Sheerweave 7450 | 118" | NO | NO | 84" | 84" | N/A | N/A | 84" | 84" | N/A | N/A |
| Sheerweave 7500 | 118" | NO | NO | 84" | 84" | N/A | N/A | 84" | 84" | N/A | N/A |
| Sheerweave 7500R | 118" | NO | NO | 84" | 84" | N/A | N/A | 84" | 84" | N/A | N/A |
| Sheerweave 7600 | 118" | NO | NO | 84" | 84" | N/A | N/A | 84" | 84" | N/A | N/A |
| Sheerweave 7650 | 118" | NO | NO | 84" | 84" | N/A | N/A | 84" | 84" | N/A | N/A |
| Sheerweave 7700R | 118" | NO | NO | 84" | 84" | N/A | N/A | 84" | 84" | N/A | N/A |
| Sheerweave 7750R | 118" | NO | NO | 84" | 84" | N/A | N/A | 84" | 84" | N/A | N/A |
| Sorrento | 108" | NO | NO | 84" | 84" | N/A | N/A | 84" | 84" | N/A | N/A |
| Sunscreen (SW) 7000 | 118" | YES | YES | 84" | 84" | 84" | 84" | 84" | 84" | 84" | 84" |
| Tundra | 94" | NO | NO | 84" | 84" | N/A | N/A | 84" | 84" | N/A | N/A |
| Tundra Blackout | 94" | NO | NO | 84" | 84" | N/A | N/A | 84" | 84" | N/A | N/A |
| Uptown | 78" | YES | NO | 78" | 84" | 84" | 66" | 78" | 84" | 84" | 66" |
| Uptown Room Darkening | 78" | YES | NO | 78" | 84" | 84" | 66" | 78" | 84" | 84" | 66" |
| World Textures 1 | 78" | YES | YES | 78" | 84" | 84" | 66" | 78" | 84" | 84" | 84" |
| World Textures 1 Blackout | 78" | YES | YES | 78" | 84" | 84" | 66" | 78" | 84" | 84" | 84" |
| World Textures 2 | 80" | YES | YES | 80" | 84" | 84" | 68" | 80" | 84" | 84" | 84" |
| World Textures 2 Blackout | 80" | YES | YES | 80" | 84" | 84" | 68" | 80" | 84" | 84" | 84" |

# PRODUCT SIZE SPECIFICATIONS – POWERWAND™

**Minimum and Maximum Standards**
Please Note: Shade sizes that are wider than the fabric roll width indicated will be made with the fabric turned width for length (railroaded). The maximum width for non-railroaded shades is the roll width unless otherwise noted.

| Minimum: | Width | Height |
|---|---|---|
| PowerWand | 19" | 12" |

Fabrics turned width for length will have a visible seam when fabricated longer than their maximum roll width less 10". Fabrics turned width for length may have an edge curl. This is not considered a defect in the product.

| Material Name | Roll Width | Railroad Option | Splice/ Seam | | PowerWand™ Shade Without Top Treament | PowerWand™ Shade with Deluxe | PowerWand™ Shade with Fabric | PowerWand™ Shade with Medium | PowerWand™ Shade with Large |
|---|---|---|---|---|---|---|---|---|---|
| 1% E Screen | 122" | YES | YES | Non-Railroaded | | | | | |
| | | | | Maximum Width | 102" | 102" | 102" | 102" | 102" |
| | | | | | Maximum Height | | | | |
| | | | | For Shade Widths to 66" | 144" | 144" | 144" | 138" | 144" |
| | | | | For Shade Widths to 72" | 138" | 138" | 138" | 138" | 138" |
| | | | | For Shade Widths to 84" | 120" | 120" | 120" | 120" | 120" |
| | | | | For Shade Widths to 90" | 108" | 108" | 108" | 108" | 108" |
| | | | | For Shade Widths to 96" | 102" | 102" | 102" | 102" | 102" |
| | | | | For Shade Widths to 102" | 84" | 84" | 84" | 84" | 84" |
| | | | | Railroaded | | | | | |
| | | | | Maximum Width | 102" | 102" | 102" | 102" | 102" |
| | | | | | Maximum Height | | | | |
| | | | | For Shade Widths to 66" | 144" | 144" | 144" | 138" | 144" |
| | | | | For Shade Widths to 72" | 138" | 138" | 138" | 138" | 138" |
| | | | | For Shade Widths to 84" | 120" | 120" | 120" | 120" | 120" |
| | | | | For Shade Widths to 90" | 108" | 108" | 108" | 108" | 108" |
| | | | | For Shade Widths to 96" | 102" | 102" | 102" | 102" | 102" |
| | | | | For Shade Widths to 102" | 84" | 84" | 84" | 84" | 84" |
| 1% Sheerweave 2500 | 126" | YES | YES | Non-Railroaded | | | | | |
| | | | | Maximum Width | 96" | 96" | 96" | 96" | 96" |
| | | | | | Maximum Height | | | | |
| | | | | For Shade Widths to 60" | 126" | 126" | 126" | 114" | 126" |
| | | | | For Shade Widths to 72" | 102" | 102" | 102" | 102" | 102" |
| | | | | For Shade Widths to 78" | 90" | 90" | 90" | 90" | 90" |
| | | | | For Shade Widths to 84" | 84" | 84" | 84" | 84" | 84" |
| | | | | For Shade Widths to 90" | 78" | 78" | 78" | 78" | 78" |
| | | | | For Shade Widths to 96" | 72" | 72" | 72" | 72" | 72" |
| | | | | Railroaded | | | | | |
| | | | | Maximum Width | 96" | 96" | 96" | 96" | 96" |
| | | | | | Maximum Height | | | | |
| | | | | For Shade Widths to 60" | 126" | 126" | 126" | 114" | 126" |
| | | | | For Shade Widths to 72" | 102" | 102" | 102" | 102" | 102" |
| | | | | For Shade Widths to 78" | 90" | 90" | 90" | 90" | 90" |
| | | | | For Shade Widths to 84" | 84" | 84" | 84" | 84" | 84" |
| | | | | For Shade Widths to 90" | 78" | 78" | 78" | 78" | 78" |
| | | | | For Shade Widths to 96" | 72" | 72" | 72" | 72" | 72" |
| 1% Sheerweave 2701 | 126" | YES | YES | Non-Railroaded | | | | | |
| | | | | Maximum Width | 96" | 96" | 96" | 96" | 96" |
| | | | | | Maximum Height | | | | |
| | | | | For Shade Widths to 60" | 126" | 126" | 126" | 126" | 126" |
| | | | | For Shade Widths to 72" | 102" | 102" | 102" | 102" | 102" |
| | | | | For Shade Widths to 78" | 90" | 90" | 90" | 90" | 90" |
| | | | | For Shade Widths to 84" | 84" | 84" | 84" | 84" | 84" |
| | | | | For Shade Widths to 90" | 78" | 78" | 78" | 78" | 78" |
| | | | | For Shade Widths to 96" | 72" | 72" | 72" | 72" | 72" |
| | | | | Railroaded | | | | | |
| | | | | Maximum Width | 96" | 96" | 96" | 96" | 96" |
| | | | | | Maximum Height | | | | |
| | | | | For Shade Widths to 60" | 126" | 126" | 126" | 126" | 126" |
| | | | | For Shade Widths to 72" | 102" | 102" | 102" | 102" | 102" |
| | | | | For Shade Widths to 78" | 90" | 90" | 90" | 90" | 90" |
| | | | | For Shade Widths to 84" | 84" | 84" | 84" | 84" | 84" |
| | | | | For Shade Widths to 90" | 78" | 78" | 78" | 78" | 78" |
| | | | | For Shade Widths to 96" | 72" | 72" | 72" | 72" | 72" |

# PRODUCT SIZE SPECIFICATIONS – POWERWAND™

**Minimum and Maximum Standards**
Please Note: Shade sizes that are wider than the fabric roll width indicated will be made with the fabric turned width for length (railroaded). The maximum width for non-railroaded shades is the roll width unless otherwise noted.

| Minimum: | Width | Height |
|---|---|---|
| PowerWand | 19" | 12" |

Fabrics turned width for length will have a visible seam when fabricated longer than their maximum roll width less 10". Fabrics turned width for length may have an edge curl. This is not considered a defect in the product.

| Material Name | Roll Width | Railroad Option | Splice/ Seam | | PowerWand™ Shade Without Top Treament | PowerWand™ Shade with Deluxe | PowerWand™ Shade with Fabric | PowerWand™ Shade with Medium | PowerWand™ Shade with Large |
|---|---|---|---|---|---|---|---|---|---|
| 1% Sheerweave 4901 | 98" | NO | NO | Non-Railroaded | | | | | |
| | | | | Maximum Width | 96" | 88" | 88" | 96" | 96" |
| | | | | | Maximum Height | | | | |
| | | | | For Shade Widths to 54" | 138" | 138" | 138" | 96" | 138" |
| | | | | For Shade Widths to 60" | 126" | 126" | 126" | 96" | 126" |
| | | | | For Shade Widths to 66" | 108" | 108" | 108" | 96" | 108" |
| | | | | For Shade Widths to 72" | 102" | 102" | 102" | 96" | 102" |
| | | | | For Shade Widths to 78" | 90" | 90" | 90" | 90" | 90" |
| | | | | For Shade Widths to 84" | 84" | 84" | 84" | 84" | 84" |
| | | | | For Shade Widths to 88" | 78" | 78" | 78" | 78" | 78" |
| | | | | For Shade Widths to 90" | 78" | N/A | N/A | 78" | 78" |
| | | | | For Shade Widths to 96" | 72" | N/A | N/A | 72" | 72" |
| 1% Sheerweave 5000 | 98" | NO | NO | Non-Railroaded | | | | | |
| | | | | Maximum Width | 96" | 90" | 90" | 96" | 96" |
| | | | | | Maximum Height | | | | |
| | | | | For Shade Widths to 60" | 126" | 86" | 86" | 54" | 86" |
| | | | | For Shade Widths to 72" | 102" | 86" | 86" | 54" | 86" |
| | | | | For Shade Widths to 78" | 90" | 86" | 86" | 54" | 86" |
| | | | | For Shade Widths to 84" | 84" | 84" | 84" | 54" | 84" |
| | | | | For Shade Widths to 90" | 78" | 78" | 78" | 54" | 78" |
| | | | | For Shade Widths to 96" | 72" | NA | NA | 54" | 72" |
| 1% Toka | 118" | YES | YES | Non-Railroaded | | | | | |
| | | | | Maximum Width | 96" | 96" | 96" | 96" | 96" |
| | | | | | Maximum Height | | | | |
| | | | | For Shade Widths to 60" | 126" | 126" | 126" | 96" | 126" |
| | | | | For Shade Widths to 72" | 102" | 102" | 102" | 96" | 102" |
| | | | | For Shade Widths to 78" | 90" | 90" | 90" | 90" | 90" |
| | | | | For Shade Widths to 84" | 84" | 84" | 84" | 84" | 84" |
| | | | | For Shade Widths to 90" | 78" | 78" | 78" | 78" | 78" |
| | | | | For Shade Widths to 96" | 72" | 72" | 72" | 72" | 72" |
| | | | | Railroaded | | | | | |
| | | | | Maximum Width | 96" | 96" | 96" | 96" | 96" |
| | | | | | Maximum Height | | | | |
| | | | | For Shade Widths to 60" | 126" | 126" | 126" | 96" | 126" |
| | | | | For Shade Widths to 72" | 102" | 102" | 102" | 96" | 102" |
| | | | | For Shade Widths to 78" | 90" | 90" | 90" | 90" | 90" |
| | | | | For Shade Widths to 84" | 84" | 84" | 84" | 84" | 84" |
| | | | | For Shade Widths to 90" | 78" | 78" | 78" | 78" | 78" |
| | | | | For Shade Widths to 96" | 72" | 72" | 72" | 72" | 72" |
| 3% E Screen | 122" | YES | YES | Non-Railroaded | | | | | |
| | | | | Maximum Width | 102" | 102" | 102" | 102" | 102" |
| | | | | | Maximum Height | | | | |
| | | | | For Shade Widths to 66" | 144" | 144" | 144" | 144" | 144" |
| | | | | For Shade Widths to 72" | 138" | 138" | 138" | 138" | 138" |
| | | | | For Shade Widths to 84" | 120" | 120" | 120" | 120" | 120" |
| | | | | For Shade Widths to 90" | 108" | 108" | 108" | 108" | 108" |
| | | | | For Shade Widths to 96" | 102" | 102" | 102" | 102" | 102" |
| | | | | For Shade Widths to 102" | 84" | 84" | 84" | 84" | 84" |
| | | | | Railroaded | | | | | |
| | | | | Maximum Width | 102" | 102" | 102" | 102" | 102" |
| | | | | | Maximum Height | | | | |
| | | | | For Shade Widths to 66" | 144" | 144" | 144" | 144" | 144" |
| | | | | For Shade Widths to 72" | 138" | 138" | 138" | 138" | 138" |
| | | | | For Shade Widths to 84" | 120" | 120" | 120" | 120" | 120" |
| | | | | For Shade Widths to 90" | 108" | 108" | 108" | 108" | 108" |
| | | | | For Shade Widths to 96" | 102" | 102" | 102" | 102" | 102" |
| | | | | For Shade Widths to 102" | 84" | 84" | 84" | 84" | 84" |

# PRODUCT SIZE SPECIFICATIONS – POWERWAND™

**Minimum and Maximum Standards**
Please Note: Shade sizes that are wider than the fabric roll width indicated will be made with the fabric turned width for length (railroaded). The maximum width for non-railroaded shades is the roll width unless otherwise noted.

| Minimum: | Width | Height |
|---|---|---|
| PowerWand | 19" | 12" |

Fabrics turned width for length will have a visible seam when fabricated longer than their maximum roll width less 10". Fabrics turned width for length may have an edge curl. This is not considered a defect in the product.

| Material Name | Roll Width | Railroad Option | Splice/ Seam | | PowerWand™ Shade Without Top Treament | PowerWand™ Shade with Deluxe | PowerWand™ Shade with Fabric | PowerWand™ Shade with Medium | PowerWand™ Shade with Large |
|---|---|---|---|---|---|---|---|---|---|
| 3% M Screen | 122" | YES | YES | Non-Railroaded | | | | | |
| | | | | Maximum Width | 102" | 102" | 102" | 102" | 102" |
| | | | | | Maximum Height | | | | |
| | | | | For Shade Widths to 66" | 144" | 144" | 144" | 144" | 144" |
| | | | | For Shade Widths to 72" | 138" | 138" | 138" | 138" | 138" |
| | | | | For Shade Widths to 84" | 120" | 120" | 120" | 120" | 120" |
| | | | | For Shade Widths to 90" | 108" | 108" | 108" | 108" | 108" |
| | | | | For Shade Widths to 96" | 102" | 102" | 102" | 102" | 102" |
| | | | | For Shade Widths to 102" | 84" | 84" | 84" | 84" | 84" |
| | | | | Railroaded | | | | | |
| | | | | Maximum Width | 102" | 102" | 102" | 102" | 102" |
| | | | | | Maximum Height | | | | |
| | | | | For Shade Widths to 66" | 144" | 144" | 144" | 144" | 144" |
| | | | | For Shade Widths to 72" | 138" | 138" | 138" | 138" | 138" |
| | | | | For Shade Widths to 84" | 120" | 120" | 120" | 120" | 120" |
| | | | | For Shade Widths to 90" | 108" | 108" | 108" | 108" | 108" |
| | | | | For Shade Widths to 96" | 102" | 102" | 102" | 102" | 102" |
| | | | | For Shade Widths to 102" | 84" | 84" | 84" | 84" | 84" |
| 3% Sheerweave 2410 | 126" | YES | YES | Non-Railroaded | | | | | |
| | | | | Maximum Width | 102" | 102" | 102" | 102" | 102" |
| | | | | | Maximum Height | | | | |
| | | | | For Shade Widths to 66" | 108" | 108" | 108" | 108" | 108" |
| | | | | For Shade Widths to 72" | 102" | 102" | 102" | 102" | 102" |
| | | | | For Shade Widths to 84" | 84" | 84" | 84" | 84" | 84" |
| | | | | For Shade Widths to 90" | 78" | 78" | 78" | 78" | 78" |
| | | | | For Shade Widths to 96" | 72" | 72" | 72" | 72" | 72" |
| | | | | For Shade Widths to 102" | 60" | 60" | 60" | 60" | 60" |
| | | | | Railroaded | | | | | |
| | | | | Maximum Width | 102" | 102" | 102" | 102" | 102" |
| | | | | | Maximum Height | | | | |
| | | | | For Shade Widths to 66" | 108" | 108" | 108" | 108" | 108" |
| | | | | For Shade Widths to 72" | 102" | 102" | 102" | 102" | 102" |
| | | | | For Shade Widths to 84" | 84" | 84" | 84" | 84" | 84" |
| | | | | For Shade Widths to 90" | 78" | 78" | 78" | 78" | 78" |
| | | | | For Shade Widths to 96" | 72" | 72" | 72" | 72" | 72" |
| | | | | For Shade Widths to 102" | 60" | 60" | 60" | 60" | 60" |
| 3% Sheerweave 2703 | 126" | YES | YES | Non-Railroaded | | | | | |
| | | | | Maximum Width | 96" | 96" | 96" | 96" | 96" |
| | | | | | Maximum Height | | | | |
| | | | | For Shade Widths to 54" | 138" | 138" | 138" | 96" | 138" |
| | | | | For Shade Widths to 60" | 126" | 126" | 126" | 96" | 126" |
| | | | | For Shade Widths to 66" | 108" | 108" | 108" | 96" | 108" |
| | | | | For Shade Widths to 72" | 102" | 102" | 102" | 96" | 102" |
| | | | | For Shade Widths to 78" | 90" | 90" | 90" | 90" | 90" |
| | | | | For Shade Widths to 84" | 84" | 84" | 84" | 84" | 84" |
| | | | | For Shade Widths to 90" | 78" | 78" | 78" | 78" | 78" |
| | | | | For Shade Widths to 96" | 72" | 72" | 72" | 72" | 72" |
| | | | | Railroaded | | | | | |
| | | | | Maximum Width | 96" | 96" | 96" | 96" | 96" |
| | | | | | Maximum Height | | | | |
| | | | | For Shade Widths to 54" | 138" | 138" | 138" | 96" | 138" |
| | | | | For Shade Widths to 60" | 126" | 126" | 126" | 96" | 126" |
| | | | | For Shade Widths to 66" | 108" | 108" | 108" | 96" | 108" |
| | | | | For Shade Widths to 72" | 102" | 102" | 102" | 96" | 102" |
| | | | | For Shade Widths to 78" | 90" | 90" | 90" | 90" | 90" |
| | | | | For Shade Widths to 84" | 84" | 84" | 84" | 84" | 84" |
| | | | | For Shade Widths to 90" | 78" | 78" | 78" | 78" | 78" |
| | | | | For Shade Widths to 96" | 72" | 72" | 72" | 72" | 72" |

# PRODUCT SIZE SPECIFICATIONS – POWERWAND™

**Minimum and Maximum Standards**
Please Note: Shade sizes that are wider than the fabric roll width indicated will be made with the fabric turned width for length (railroaded). The maximum width for non-railroaded shades is the roll width unless otherwise noted.

| Minimum: | Width | Height |
|---|---|---|
| PowerWand | 19" | 12" |

Fabrics turned width for length will have a visible seam when fabricated longer than their maximum roll width less 10". Fabrics turned width for length may have an edge curl. This is not considered a defect in the product.

| Material Name | Roll Width | Railroad Option | Splice/ Seam | | PowerWand™ Shade Without Top Treament | PowerWand™ Shade with Deluxe | PowerWand™ Shade with Fabric | PowerWand™ Shade with Medium | PowerWand™ Shade with Large |
|---|---|---|---|---|---|---|---|---|---|
| **3% Sheerweave 4400** | **126"** | **YES** | **YES** | **Non-Railroaded** | | | | | |
| | | | | **Maximum Width** | **96"** | **96"** | **96"** | **96"** | **96"** |
| | | | | | **Maximum Height** | | | | |
| | | | | **For Shade Widths to 60"** | 126" | 120" | 120" | 78" | 120" |
| | | | | **For Shade Widths to 72"** | 102" | 102" | 102" | 78" | 102" |
| | | | | **For Shade Widths to 78"** | 90" | 90" | 90" | 78" | 90" |
| | | | | **For Shade Widths to 84"** | 84" | 84" | 84" | 78" | 84" |
| | | | | **For Shade Widths to 90"** | 78" | 78" | 78" | 78" | 78" |
| | | | | **For Shade Widths to 96"** | 72" | 72" | 72" | 72" | 72" |
| | | | | **Railroaded** | | | | | |
| | | | | **Maximum Width** | **96"** | **96"** | **96"** | **96"** | **96"** |
| | | | | | **Maximum Height** | | | | |
| | | | | **For Shade Widths to 60"** | 126" | 120" | 120" | 78" | 120" |
| | | | | **For Shade Widths to 72"** | 102" | 102" | 102" | 78" | 102" |
| | | | | **For Shade Widths to 78"** | 90" | 90" | 90" | 78" | 90" |
| | | | | **For Shade Widths to 84"** | 84" | 84" | 84" | 78" | 84" |
| | | | | **For Shade Widths to 90"** | 78" | 78" | 78" | 78" | 78" |
| | | | | **For Shade Widths to 96"** | 72" | 72" | 72" | 72" | 72" |
| **3% Sheerweave 4600** | **126"** | **YES** | **YES** | **Non-Railroaded** | | | | | |
| | | | | **Maximum Width** | **96"** | **96"** | **96"** | **96"** | **96"** |
| | | | | | **Maximum Height** | | | | |
| | | | | **For Shade Widths to 54"** | 120" | 120" | 120" | 120" | 120" |
| | | | | **For Shade Widths to 60"** | 120" | 120" | 120" | 120" | 120" |
| | | | | **For Shade Widths to 66"** | 108" | 108" | 108" | 84" | 108" |
| | | | | **For Shade Widths to 72"** | 102" | 102" | 102" | 84" | 102" |
| | | | | **For Shade Widths to 78"** | 90" | 90" | 90" | 84" | 90" |
| | | | | **For Shade Widths to 84"** | 84" | 84" | 84" | 84" | 84" |
| | | | | **For Shade Widths to 90"** | 78" | 78" | 78" | 78" | 78" |
| | | | | **For Shade Widths to 96"** | 72" | 72" | 72" | 72" | 72" |
| | | | | **Railroaded** | | | | | |
| | | | | **Maximum Width** | **96"** | **96"** | **96"** | **96"** | **96"** |
| | | | | | **Maximum Height** | | | | |
| | | | | **For Shade Widths to 54"** | 120" | 120" | 120" | 120" | 120" |
| | | | | **For Shade Widths to 60"** | 120" | 120" | 120" | 120" | 120" |
| | | | | **For Shade Widths to 66"** | 108" | 108" | 108" | 84" | 108" |
| | | | | **For Shade Widths to 72"** | 102" | 102" | 102" | 84" | 102" |
| | | | | **For Shade Widths to 78"** | 90" | 90" | 90" | 84" | 90" |
| | | | | **For Shade Widths to 84"** | 84" | 84" | 84" | 84" | 84" |
| | | | | **For Shade Widths to 90"** | 78" | 78" | 78" | 78" | 78" |
| | | | | **For Shade Widths to 96"** | 72" | 72" | 72" | 72" | 72" |
| **3% Sheerweave 4903** | **98"** | **NO** | **NO** | **Non-Railroaded** | | | | | |
| | | | | **Maximum Width** | **96"** | **88"** | **88"** | **96"** | **96"** |
| | | | | | **Maximum Height** | | | | |
| | | | | **For Shade Widths to 54"** | 138" | 138" | 138" | 90" | 138" |
| | | | | **For Shade Widths to 60"** | 126" | 126" | 126" | 90" | 126" |
| | | | | **For Shade Widths to 66"** | 108" | 108" | 108" | 90" | 108" |
| | | | | **For Shade Widths to 72"** | 102" | 102" | 102" | 90" | 102" |
| | | | | **For Shade Widths to 78"** | 90" | 90" | 90" | 90" | 90" |
| | | | | **For Shade Widths to 84"** | 84" | 84" | 84" | 84" | 84" |
| | | | | **For Shade Widths to 88"** | 78" | 78" | 78" | 78" | 78" |
| | | | | **For Shade Widths to 90"** | 78" | NA | NA | 78" | 78" |
| | | | | **For Shade Widths to 96"** | 72" | NA | NA | 72" | 72" |
| **3% Sheerweave 5000** *(R07_02, 04, 05, 07, 10)* | **98"** | **NO** | **NO** | **Non-Railroaded** | | | | | |
| | | | | **Maximum Width** | **96"** | **88"** | **88"** | **96"** | **96"** |
| | | | | | **Maximum Height** | | | | |
| | | | | **For Shade Widths to 60"** | 126" | 72" | 72" | 42" | 72" |
| | | | | **For Shade Widths to 72"** | 102" | 72" | 72" | 42" | 72" |
| | | | | **For Shade Widths to 78"** | 90" | 72" | 72" | 42" | 72" |
| | | | | **For Shade Widths to 84"** | 84" | 72" | 72" | 42" | 72" |
| | | | | **For Shade Widths to 88"** | 78" | 72" | 72" | 42" | 72" |
| | | | | **For Shade Widths to 90"** | 78" | NA | NA | 42" | 72" |
| | | | | **For Shade Widths to 96"** | 72" | NA | NA | 42" | 72" |

# PRODUCT SIZE SPECIFICATIONS – POWERWAND™

**Minimum and Maximum Standards**

Please Note: Shade sizes that are wider than the fabric roll width indicated will be made with the fabric turned width for length (railroaded). The maximum width for non-railroaded shades is the roll width unless otherwise noted.

| Minimum: | Width | Height |
|---|---|---|
| PowerWand | 19" | 12" |

Fabrics turned width for length will have a visible seam when fabricated longer than their maximum roll width less 10". Fabrics turned width for length may have an edge curl. This is not considered a defect in the product.

| Material Name | Roll Width | Railroad Option | Splice/ Seam | | PowerWand™ Shade Without Top Treament | PowerWand™ Shade with Deluxe | PowerWand™ Shade with Fabric | PowerWand™ Shade with Medium | PowerWand™ Shade with Large |
|---|---|---|---|---|---|---|---|---|---|
| **3% Sheerweave 5000** | **98"** | **NO** | **NO** | **Non-Railroaded** | | | | | |
| *(R07_R11, R89, R90, R93, U10, U11)* | | | | **Maximum Width** | **96"** | **88"** | **88"** | **96"** | **96"** |
| | | | | | **Maximum Height** | | | | |
| | | | | **For Shade Widths to 54"** | 138" | 78" | 78" | 48" | 78" |
| | | | | **For Shade Widths to 60"** | 126" | 78" | 78" | 48" | 78" |
| | | | | **For Shade Widths to 66"** | 108" | 78" | 78" | 48" | 78" |
| | | | | **For Shade Widths to 72"** | 102" | 78" | 78" | 48" | 78" |
| | | | | **For Shade Widths to 78"** | 90" | 78" | 78" | 48" | 78" |
| | | | | **For Shade Widths to 84"** | 84" | 78" | 78" | 48" | 78" |
| | | | | **For Shade Widths to 88"** | 78" | 78" | 78" | 48" | 78" |
| | | | | **For Shade Widths to 90"** | 78" | N/A | N/A | 48" | 78" |
| | | | | **For Shade Widths to 96"** | 72" | N/A | N/A | 48" | 72" |
| **3% T Screen** | **98"** | **YES** | **NO** | **Non-Railroaded** | | | | | |
| | | | | **Maximum Width** | **98"** | **88"** | **88"** | **98"** | **98"** |
| | | | | | **Maximum Height** | | | | |
| | | | | **For Shade Widths to 66"** | 144" | 144" | 144" | 108" | 144" |
| | | | | **For Shade Widths to 72"** | 138" | 138" | 138" | 108" | 138" |
| | | | | **For Shade Widths to 84"** | 120" | 120" | 120" | 108" | 120" |
| | | | | **For Shade Widths to 88"** | 108" | 108" | 108" | 108" | 108" |
| | | | | **For Shade Widths to 90"** | 108" | NA | NA | 108" | 108" |
| | | | | **For Shade Widths to 96"** | 102" | NA | NA | 102" | 102" |
| | | | | **For Shade Widths to 98"** | 84" | NA | NA | 84" | 84" |
| | | | | **Railroaded** | | | | | |
| | | | | **Maximum Width** | **108"** | **108"** | **108"** | **108"** | **108"** |
| | | | | | **Maximum Height** | | | | |
| | | | | **For Shade Widths to 96"** | 86" | 86" | 86" | 86" | 86" |
| | | | | **For Shade Widths to 102"** | 84" | 84" | 84" | 84" | 84" |
| | | | | **For Shade Widths to 108"** | 66" | 66" | 66" | 66" | 66" |
| **4% S Screen** | **122"** | **NO** | **NO** | **Non-Railroaded** | | | | | |
| | | | | **Maximum Width** | **96"** | **96"** | **96"** | **96"** | **96"** |
| | | | | | **Maximum Height** | | | | |
| | | | | **For Shade Widths to 60"** | 126" | 120" | 120" | 72" | 120" |
| | | | | **For Shade Widths to 72"** | 102" | 102" | 102" | 72" | 102" |
| | | | | **For Shade Widths to 78"** | 90" | 90" | 90" | 72" | 90" |
| | | | | **For Shade Widths to 84"** | 84" | 84" | 84" | 72" | 84" |
| | | | | **For Shade Widths to 90"** | 78" | 78" | 78" | 72" | 78" |
| | | | | **For Shade Widths to 96"** | 72" | 72" | 72" | 72" | 72" |
| **4% Silver Screen** | **94"** | **YES** | **YES** | **Non-Railroaded** | | | | | |
| | | | | **Maximum Width** | **94"** | **84"** | **84"** | **94"** | **94"** |
| | | | | | **Maximum Height** | | | | |
| | | | | **For Shade Widths to 66"** | 144" | 144" | 144" | 144" | 144" |
| | | | | **For Shade Widths to 72"** | 138" | 138" | 138" | 138" | 138" |
| | | | | **For Shade Widths to 84"** | 120" | 120" | 120" | 120" | 120" |
| | | | | **For Shade Widths to 90"** | 108" | NA | NA | 108" | 108" |
| | | | | **For Shade Widths to 94"** | 102" | NA | NA | 102" | 102" |
| | | | | **Railroaded** | | | | | |
| | | | | **Maximum Width** | **102"** | **102"** | **102"** | **102"** | **102"** |
| | | | | | **Maximum Height** | | | | |
| | | | | **For Shade Widths to 66"** | 144" | 144" | 144" | 144" | 144" |
| | | | | **For Shade Widths to 72"** | 138" | 138" | 138" | 138" | 138" |
| | | | | **For Shade Widths to 84"** | 120" | 120" | 120" | 120" | 120" |
| | | | | **For Shade Widths to 90"** | 108" | 108" | 108" | 108" | 108" |
| | | | | **For Shade Widths to 94"** | 102" | 102" | 102" | 102" | 102" |
| | | | | **For Shade Widths to 102"** | 84" | 84" | 84" | 84" | 84" |
| **5% E Screen** | **122"** | **YES** | **YES** | **Non-Railroaded** | | | | | |
| | | | | **Maximum Width** | **102"** | **102"** | **102"** | **102"** | **102"** |
| | | | | | **Maximum Height** | | | | |
| | | | | **For Shade Widths to 66"** | 144" | 144" | 144" | 144" | 144" |
| | | | | **For Shade Widths to 72"** | 138" | 138" | 138" | 138" | 138" |
| | | | | **For Shade Widths to 84"** | 120" | 120" | 120" | 120" | 120" |
| | | | | **For Shade Widths to 90"** | 108" | 108" | 108" | 108" | 108" |
| | | | | **For Shade Widths to 96"** | 102" | 102" | 102" | 102" | 102" |
| | | | | **For Shade Widths to 102"** | 84" | 84" | 84" | 84" | 84" |
| | | | | **Railroaded** | | | | | |
| | | | | **Maximum Width** | **102"** | **102"** | **102"** | **102"** | **102"** |
| | | | | | **Maximum Height** | | | | |
| | | | | **For Shade Widths to 66"** | 144" | 144" | 144" | 144" | 144" |
| | | | | **For Shade Widths to 72"** | 138" | 138" | 138" | 138" | 138" |
| | | | | **For Shade Widths to 84"** | 120" | 120" | 120" | 120" | 120" |
| | | | | **For Shade Widths to 90"** | 108" | 108" | 108" | 108" | 108" |
| | | | | **For Shade Widths to 96"** | 102" | 102" | 102" | 102" | 102" |
| | | | | **For Shade Widths to 102"** | 84" | 84" | 84" | 84" | 84" |

# PRODUCT SIZE SPECIFICATIONS – POWERWAND™

**Minimum and Maximum Standards**
Please Note: Shade sizes that are wider than the fabric roll width indicated will be made with the fabric turned width for length (railroaded). The maximum width for non-railroaded shades is the roll width unless otherwise noted.

| Minimum: | Width | Height |
|---|---|---|
| PowerWand | 19" | 12" |

Fabrics turned width for length will have a visible seam when fabricated longer than their maximum roll width less 10". Fabrics turned width for length may have an edge curl. This is not considered a defect in the product.

| Material Name | Roll Width | Railroad Option | Splice/ Seam | | PowerWand™ Shade Without Top Treament | PowerWand™ Shade with Deluxe | PowerWand™ Shade with Fabric | PowerWand™ Shade with Medium | PowerWand™ Shade with Large |
|---|---|---|---|---|---|---|---|---|---|
| 5% M Screen Deco | 98" | YES | YES | Non-Railroaded | | | | | |
| | | | | Maximum Width | 96" | 88" | 88" | 96" | 96" |
| | | | | | Maximum Height | | | | |
| | | | | For Shade Widths to 66" | 144" | 144" | 144" | 120" | 144" |
| | | | | For Shade Widths to 72" | 138" | 138" | 138" | 120" | 138" |
| | | | | For Shade Widths to 84" | 120" | 120" | 120" | 120" | 120" |
| | | | | For Shade Widths to 88" | 108" | 108" | 108" | 108" | 108" |
| | | | | For Shade Widths to 90" | 108" | NA | NA | 108" | 108" |
| | | | | For Shade Widths to 96" | 102" | NA | NA | 102" | 102" |
| | | | | Railroaded | | | | | |
| | | | | Maximum Width | 102" | 102" | 102" | 102" | 102" |
| | | | | | Maximum Height | | | | |
| | | | | For Shade Widths to 66" | 144" | 144" | 144" | 120" | 144" |
| | | | | For Shade Widths to 72" | 138" | 138" | 138" | 120" | 138" |
| | | | | For Shade Widths to 84" | 120" | 120" | 120" | 120" | 120" |
| | | | | For Shade Widths to 90" | 108" | 108" | 108" | 108" | 108" |
| | | | | For Shade Widths to 96" | 102" | 102" | 102" | 102" | 102" |
| | | | | For Shade Widths to 102" | 84" | 84" | 84" | 84" | 84" |
| 5% Sheerweave 2000 | 126" | YES | YES | Non-Railroaded | | | | | |
| | | | | Maximum Width | 96" | 96" | 96" | 96" | 96" |
| | | | | | Maximum Height | | | | |
| | | | | For Shade Widths to 54" | 138" | 138" | 138" | 132" | 138" |
| | | | | For Shade Widths to 60" | 126" | 126" | 126" | 126" | 126" |
| | | | | For Shade Widths to 66" | 108" | 108" | 108" | 108" | 108" |
| | | | | For Shade Widths to 72" | 102" | 102" | 102" | 102" | 102" |
| | | | | For Shade Widths to 78" | 90" | 90" | 90" | 90" | 90" |
| | | | | For Shade Widths to 84" | 84" | 84" | 84" | 84" | 84" |
| | | | | For Shade Widths to 90" | 78" | 78" | 78" | 78" | 78" |
| | | | | For Shade Widths to 96" | 72" | 72" | 72" | 72" | 72" |
| | | | | Railroaded | | | | | |
| | | | | Maximum Width | 96" | 96" | 96" | 96" | 96" |
| | | | | | Maximum Height | | | | |
| | | | | For Shade Widths to 54" | 120" | 120" | 120" | 120" | 120" |
| | | | | For Shade Widths to 60" | 120" | 120" | 120" | 120" | 120" |
| | | | | For Shade Widths to 66" | 108" | 108" | 108" | 108" | 108" |
| | | | | For Shade Widths to 72" | 102" | 102" | 102" | 102" | 102" |
| | | | | For Shade Widths to 78" | 90" | 90" | 90" | 90" | 90" |
| | | | | For Shade Widths to 84" | 84" | 84" | 84" | 84" | 84" |
| | | | | For Shade Widths to 90" | 78" | 78" | 78" | 78" | 78" |
| | | | | For Shade Widths to 96" | 72" | 72" | 72" | 72" | 72" |
| 5% Sheerweave 2390 | 126" | YES | YES | Non-Railroaded | | | | | |
| | | | | Maximum Width | 102" | 102" | 102" | 102" | 102" |
| | | | | | Maximum Height | | | | |
| | | | | For Shade Widths to 66" | 144" | 144" | 144" | 144" | 144" |
| | | | | For Shade Widths to 72" | 138" | 138" | 138" | 138" | 138" |
| | | | | For Shade Widths to 84" | 120" | 120" | 120" | 120" | 120" |
| | | | | For Shade Widths to 90" | 108" | 108" | 108" | 108" | 108" |
| | | | | For Shade Widths to 96" | 102" | 102" | 102" | 102" | 102" |
| | | | | For Shade Widths to 102" | 84" | 84" | 84" | 84" | 84" |
| | | | | Railroaded | | | | | |
| | | | | Maximum Width | 102" | 102" | 102" | 102" | 102" |
| | | | | | Maximum Height | | | | |
| | | | | For Shade Widths to 66" | 144" | 144" | 144" | 144" | 144" |
| | | | | For Shade Widths to 72" | 138" | 138" | 138" | 138" | 138" |
| | | | | For Shade Widths to 84" | 120" | 120" | 120" | 120" | 120" |
| | | | | For Shade Widths to 90" | 108" | 108" | 108" | 108" | 108" |
| | | | | For Shade Widths to 96" | 102" | 102" | 102" | 102" | 102" |
| | | | | For Shade Widths to 102" | 84" | 84" | 84" | 84" | 84" |

# PRODUCT SIZE SPECIFICATIONS – POWERWAND™

**Minimum and Maximum Standards**
Please Note: Shade sizes that are wider than the fabric roll width indicated will be made with the fabric turned width for length (railroaded). The maximum width for non-railroaded shades is the roll width unless otherwise noted.

| Minimum: | Width | Height |
|---|---|---|
| PowerWand | 19" | 12" |

Fabrics turned width for length will have a visible seam when fabricated longer than their maximum roll width less 10". Fabrics turned width for length may have an edge curl. This is not considered a defect in the product.

| Material Name | Roll Width | Railroad Option | Splice/ Seam | | PowerWand™ Shade Without Top Treament | PowerWand™ Shade with Deluxe | PowerWand™ Shade with Fabric | PowerWand™ Shade with Medium | PowerWand™ Shade with Large |
|---|---|---|---|---|---|---|---|---|---|
| **5% Sheerweave 2705** | **126"** | **NO** | **NO** | **Non-Railroaded** | | | | | |
| | | | | **Maximum Width** | **98"** | **98"** | **N/A** | **98"** | **98"** |
| | | | | | **Maximum Height** | | | | |
| | | | | **For Shade Widths to 66"** | 120" | 120" | N/A | 102" | 120" |
| | | | | **For Shade Widths to 72"** | 120" | 120" | N/A | 102" | 120" |
| | | | | **For Shade Widths to 78"** | 120" | 120" | N/A | 102" | 120" |
| | | | | **For Shade Widths to 84"** | 120" | 120" | N/A | 102" | 120" |
| | | | | **For Shade Widths to 90"** | 108" | 108" | N/A | 102" | 108" |
| | | | | **For Shade Widths to 96"** | 102" | 102" | N/A | 102" | 102" |
| | | | | **For Shade Widths to 98"** | 84" | 84" | NA | 84" | 84" |
| **5% Sheerweave 4000** | **126"** | **YES** | **YES** | **Non-Railroaded** | | | | | |
| | | | | **Maximum Width** | **96"** | **96"** | **96"** | **96"** | **96"** |
| | | | | | **Maximum Height** | | | | |
| | | | | **For Shade Widths to 60"** | 126" | 114" | 114" | 72" | 114" |
| | | | | **For Shade Widths to 66"** | 108" | 108" | 108" | 72" | 108" |
| | | | | **For Shade Widths to 72"** | 102" | 102" | 102" | 72" | 102" |
| | | | | **For Shade Widths to 78"** | 90" | 90" | 90" | 72" | 90" |
| | | | | **For Shade Widths to 84"** | 84" | 84" | 84" | 72" | 84" |
| | | | | **For Shade Widths to 90"** | 78" | 78" | 78" | 72" | 78" |
| | | | | **For Shade Widths to 96"** | 72" | 72" | 72" | 72" | 72" |
| | | | | **Railroaded** | | | | | |
| | | | | **Maximum Width** | **96"** | **96"** | **96"** | **96"** | **96"** |
| | | | | | **Maximum Height** | | | | |
| | | | | **For Shade Widths to 60"** | 126" | 114" | 114" | 72" | 114" |
| | | | | **For Shade Widths to 66"** | 108" | 108" | 108" | 72" | 108" |
| | | | | **For Shade Widths to 72"** | 102" | 102" | 102" | 72" | 102" |
| | | | | **For Shade Widths to 78"** | 90" | 90" | 90" | 72" | 90" |
| | | | | **For Shade Widths to 84"** | 84" | 84" | 84" | 72" | 84" |
| | | | | **For Shade Widths to 90"** | 78" | 78" | 78" | 72" | 78" |
| | | | | **For Shade Widths to 96"** | 72" | 72" | 72" | 72" | 72" |
| **5% Sheerweave 4500** | **126"** | **YES** | **YES** | **Non-Railroaded** | | | | | |
| | | | | **Maximum Width** | **96"** | **96"** | **96"** | **96"** | **96"** |
| | | | | | **Maximum Height** | | | | |
| | | | | **For Shade Widths to 54"** | 138" | 138" | 138" | 108" | 138" |
| | | | | **For Shade Widths to 60"** | 126" | 126" | 126" | 108" | 126" |
| | | | | **For Shade Widths to 66"** | 108" | 108" | 108" | 108" | 108" |
| | | | | **For Shade Widths to 72"** | 102" | 102" | 102" | 102" | 102" |
| | | | | **For Shade Widths to 78"** | 90" | 90" | 90" | 90" | 90" |
| | | | | **For Shade Widths to 84"** | 84" | 84" | 84" | 84" | 84" |
| | | | | **For Shade Widths to 90"** | 78" | 78" | 78" | 78" | 78" |
| | | | | **For Shade Widths to 96"** | 72" | 72" | 72" | 72" | 72" |
| | | | | **Railroaded** | | | | | |
| | | | | **Maximum Width** | **96"** | **96"** | **96"** | **96"** | **96"** |
| | | | | | **Maximum Height** | | | | |
| | | | | **For Shade Widths to 54"** | 138" | 138" | 138" | 108" | 138" |
| | | | | **For Shade Widths to 60"** | 126" | 126" | 126" | 108" | 126" |
| | | | | **For Shade Widths to 66"** | 108" | 108" | 108" | 108" | 108" |
| | | | | **For Shade Widths to 72"** | 102" | 102" | 102" | 102" | 102" |
| | | | | **For Shade Widths to 78"** | 90" | 90" | 90" | 90" | 90" |
| | | | | **For Shade Widths to 84"** | 84" | 84" | 84" | 84" | 84" |
| | | | | **For Shade Widths to 90"** | 78" | 78" | 78" | 78" | 78" |
| | | | | **For Shade Widths to 96"** | 72" | 72" | 72" | 72" | 72" |
| **5% Sheerweave 5000** *(R10_01, 03, 06, 07, 09, 10, 11, 12, 13,14, 15, 16, 17, 18, 19, 20, 21)* | **98"** | **NO** | **NO** | **Non-Railroaded** | | | | | |
| | | | | **Maximum Width** | **98"** | **88"** | **88"** | **98"** | **98"** |
| | | | | | **Maximum Height** | | | | |
| | | | | **For Shade Widths to 60"** | 126" | 90" | 90" | 54" | 90" |
| | | | | **For Shade Widths to 66"** | 108" | 90" | 90" | 54" | 90" |
| | | | | **For Shade Widths to 72"** | 102" | 90" | 90" | 54" | 90" |
| | | | | **For Shade Widths to 84"** | 84" | 84" | 84" | 54" | 84" |
| | | | | **For Shade Widths to 88"** | 78" | 78" | 78" | 54" | 78" |
| | | | | **For Shade Widths to 90"** | 78" | NA | NA | 54" | 78" |
| | | | | **For Shade Widths to 98"** | 60" | NA | NA | 54" | 60" |

# PRODUCT SIZE SPECIFICATIONS – POWERWAND™

**Minimum and Maximum Standards**
Please Note: Shade sizes that are wider than the fabric roll width indicated will be made with the fabric turned width for length (railroaded). The maximum width for non-railroaded shades is the roll width unless otherwise noted.

| Minimum: | Width | Height |
|---|---|---|
| PowerWand | 19" | 12" |

Fabrics turned width for length will have a visible seam when fabricated longer than their maximum roll width less 10". Fabrics turned width for length may have an edge curl. This is not considered a defect in the product.

| Material Name | Roll Width | Railroad Option | Splice/ Seam | | PowerWand™ Shade Without Top Treament | PowerWand™ Shade with Deluxe | PowerWand™ Shade with Fabric | PowerWand™ Shade with Medium | PowerWand™ Shade with Large |
|---|---|---|---|---|---|---|---|---|---|
| **5% Sheerweave 5000** *(R10_Q51, S77, S84)* | **98"** | **NO** | **NO** | **Non-Railroaded** | | | | | |
| | | | | **Maximum Width** | **96"** | **88"** | **88"** | **96"** | **96"** |
| | | | | | **Maximum Height** | | | | |
| | | | | **For Shade Widths to 54"** | 138" | 90" | 90" | 58" | 90" |
| | | | | **For Shade Widths to 60"** | 126" | 90" | 90" | 58" | 90" |
| | | | | **For Shade Widths to 66"** | 108" | 90" | 90" | 58" | 90" |
| | | | | **For Shade Widths to 72"** | 102" | 90" | 90" | 58" | 90" |
| | | | | **For Shade Widths to 78"** | 90" | 90" | 90" | 58" | 90" |
| | | | | **For Shade Widths to 84"** | 84" | 84" | 84" | 58" | 84" |
| | | | | **For Shade Widths to 88"** | 78" | 78" | 78" | 58" | 78" |
| | | | | **For Shade Widths to 90"** | 78" | N/A | N/A | 58" | 78" |
| | | | | **For Shade Widths to 96"** | 72" | N/A | N/A | 58" | 72" |
| **5% Sheerweave 5000** *(R10_Q43, S82)* | **98"** | **NO** | **NO** | **Non-Railroaded** | | | | | |
| | | | | **Maximum Width** | **96"** | **88"** | **88"** | **96"** | **96"** |
| | | | | | **Maximum Height** | | | | |
| | | | | **For Shade Widths to 54"** | 138" | 102" | 102" | 66" | 102" |
| | | | | **For Shade Widths to 60"** | 126" | 102" | 102" | 66" | 102" |
| | | | | **For Shade Widths to 66"** | 108" | 102" | 102" | 66" | 102" |
| | | | | **For Shade Widths to 72"** | 102" | 102" | 102" | 66" | 102" |
| | | | | **For Shade Widths to 78"** | 90" | 90" | 90" | 66" | 90" |
| | | | | **For Shade Widths to 84"** | 84" | 84" | 84" | 66" | 84" |
| | | | | **For Shade Widths to 88"** | 78" | 78" | 78" | 66" | 78" |
| | | | | **For Shade Widths to 90"** | 78" | N/A | N/A | 66" | 78" |
| | | | | **For Shade Widths to 96"** | 72" | N/A | N/A | 66" | 72" |
| **7% Global Screen** | **118"** | **YES** | **YES** | **Non-Railroaded** | | | | | |
| | | | | **Maximum Width** | **108"** | **108"** | **108"** | **108"** | **108"** |
| | | | | | **Maximum Height** | | | | |
| | | | | **For Shade Widths to 66"** | 144" | 144" | 144" | 126" | 144" |
| | | | | **For Shade Widths to 72"** | 138" | 138" | 138" | 126" | 138" |
| | | | | **For Shade Widths to 78"** | 126" | 126" | 126" | 126" | 126" |
| | | | | **For Shade Widths to 84"** | 120" | 120" | 120" | 120" | 120" |
| | | | | **For Shade Widths to 90"** | 108" | 108" | 108" | 108" | 108" |
| | | | | **For Shade Widths to 96"** | 102" | 102" | 102" | 102" | 102" |
| | | | | **For Shade Widths to 102"** | 84" | 84" | 84" | 84" | 84" |
| | | | | **For Shade Widths to 108"** | 66" | 66" | 66" | 66" | 66" |
| | | | | **Railroaded** | | | | | |
| | | | | **Maximum Width** | **108"** | **108"** | **108"** | **108"** | **108"** |
| | | | | | **Maximum Height** | | | | |
| | | | | **For Shade Widths to 66"** | 144" | 144" | 144" | 126" | 144" |
| | | | | **For Shade Widths to 72"** | 138" | 138" | 138" | 126" | 138" |
| | | | | **For Shade Widths to 78"** | 126" | 126" | 126" | 126" | 126" |
| | | | | **For Shade Widths to 84"** | 120" | 120" | 120" | 120" | 120" |
| | | | | **For Shade Widths to 90"** | 108" | 108" | 108" | 108" | 108" |
| | | | | **For Shade Widths to 96"** | 102" | 102" | 102" | 102" | 102" |
| | | | | **For Shade Widths to 102"** | 84" | 84" | 84" | 84" | 84" |
| | | | | **For Shade Widths to 108"** | 66" | 66" | 66" | 66" | 66" |
| **7% Sheerweave 5000** *(R34_Q46)* | **98"** | **NO** | **NO** | **Non-Railroaded** | | | | | |
| | | | | **Maximum Width** | **96"** | **88"** | **88"** | **96"** | **96"** |
| | | | | | **Maximum Height** | | | | |
| | | | | **For Shade Widths to 60"** | 126" | 102" | 102" | 66" | 102" |
| | | | | **For Shade Widths to 66"** | 108" | 102" | 102" | 66" | 102" |
| | | | | **For Shade Widths to 72"** | 102" | 102" | 102" | 66" | 102" |
| | | | | **For Shade Widths to 84"** | 84" | 84" | 84" | 66" | 84" |
| | | | | **For Shade Widths to 88"** | 78" | 78" | 78" | 66" | 78" |
| | | | | **For Shade Widths to 90"** | 78" | NA | NA | 66" | 78" |
| | | | | **For Shade Widths to 96"** | 72" | NA | NA | 66" | 72" |
| **7% Sheerweave 5000** *(R34_08, 09)* | **98"** | **NO** | **NO** | **Non-Railroaded** | | | | | |
| | | | | **Maximum Width** | **96"** | **88"** | **88"** | **96"** | **96"** |
| | | | | | **Maximum Height** | | | | |
| | | | | **For Shade Widths to 60"** | 126" | 126" | 126" | 78" | 126" |
| | | | | **For Shade Widths to 66"** | 108" | 108" | 108" | 78" | 108" |
| | | | | **For Shade Widths to 72"** | 102" | 102" | 102" | 78" | 102" |
| | | | | **For Shade Widths to 84"** | 84" | 84" | 84" | 78" | 84" |
| | | | | **For Shade Widths to 88"** | 78" | 78" | 78" | 78" | 78" |
| | | | | **For Shade Widths to 90"** | 78" | NA | NA | 78" | 78" |
| | | | | **For Shade Widths to 96"** | 72" | NA | NA | 72" | 72" |

# PRODUCT SIZE SPECIFICATIONS – POWERWAND™

**Minimum and Maximum Standards**
Please Note: Shade sizes that are wider than the fabric roll width indicated will be made with the fabric turned width for length (railroaded). The maximum width for non-railroaded shades is the roll width unless otherwise noted.

| Minimum: | Width | Height |
|---|---|---|
| PowerWand | 19" | 12" |

Fabrics turned width for length will have a visible seam when fabricated longer than their maximum roll width less 10". Fabrics turned width for length may have an edge curl. This is not considered a defect in the product.

| Material Name | Roll Width | Railroad Option | Splice/ Seam | | PowerWand™ Shade Without Top Treament | PowerWand™ Shade with Deluxe | PowerWand™ Shade with Fabric | PowerWand™ Shade with Medium | PowerWand™ Shade with Large |
|---|---|---|---|---|---|---|---|---|---|
| **7% Sheerweave 5000** *(R34_S73)* | **98"** | **NO** | **NO** | **Non-Railroaded** | | | | | |
| | | | | **Maximum Width** | **96"** | **88"** | **88"** | **96"** | **96"** |
| | | | | | **Maximum Height** | | | | |
| | | | | **For Shade Widths to 54"** | 138" | 96" | 96" | 60" | 96" |
| | | | | **For Shade Widths to 60"** | 126" | 96" | 96" | 60" | 96" |
| | | | | **For Shade Widths to 66"** | 108" | 96" | 96" | 60" | 96" |
| | | | | **For Shade Widths to 72"** | 102" | 96" | 96" | 60" | 96" |
| | | | | **For Shade Widths to 78"** | 90" | 90" | 90" | 60" | 90" |
| | | | | **For Shade Widths to 84"** | 84" | 84" | 84" | 60" | 84" |
| | | | | **For Shade Widths to 88"** | 78" | 78" | 78" | 60" | 78" |
| | | | | **For Shade Widths to 90"** | 78" | N/A | N/A | 60" | 78" |
| | | | | **For Shade Widths to 96"** | 72" | N/A | N/A | 60" | 72" |
| **10% E Screen** | **122"** | **YES** | **YES** | **Non-Railroaded** | | | | | |
| | | | | **Maximum Width** | **102"** | **102"** | **102"** | **102"** | **102"** |
| | | | | | **Maximum Height** | | | | |
| | | | | **For Shade Widths to 66"** | 144" | 144" | 144" | 138" | 144" |
| | | | | **For Shade Widths to 72"** | 138" | 138" | 138" | 138" | 138" |
| | | | | **For Shade Widths to 84"** | 120" | 120" | 120" | 120" | 120" |
| | | | | **For Shade Widths to 90"** | 108" | 108" | 108" | 108" | 108" |
| | | | | **For Shade Widths to 96"** | 102" | 102" | 102" | 102" | 102" |
| | | | | **For Shade Widths to 102"** | 84" | 84" | 84" | 84" | 84" |
| | | | | **Railroaded** | | | | | |
| | | | | **Maximum Width** | **102"** | **102"** | **102"** | **102"** | **102"** |
| | | | | | **Maximum Height** | | | | |
| | | | | **For Shade Widths to 66"** | 144" | 144" | 144" | 138" | 144" |
| | | | | **For Shade Widths to 72"** | 138" | 138" | 138" | 138" | 138" |
| | | | | **For Shade Widths to 84"** | 120" | 120" | 120" | 120" | 120" |
| | | | | **For Shade Widths to 90"** | 108" | 108" | 108" | 108" | 108" |
| | | | | **For Shade Widths to 96"** | 102" | 102" | 102" | 102" | 102" |
| | | | | **For Shade Widths to 102"** | 84" | 84" | 84" | 84" | 84" |
| **10% Sheerweave 2360** | **126"** | **NO** | **NO** | **Non-Railroaded** | | | | | |
| | | | | **Maximum Width** | **102"** | **102"** | **102"** | **102"** | **102"** |
| | | | | | **Maximum Height** | | | | |
| | | | | **For Shade Widths to 66"** | 144" | 144" | 144" | 138" | 144" |
| | | | | **For Shade Widths to 72"** | 138" | 138" | 138" | 138" | 138" |
| | | | | **For Shade Widths to 78"** | 126" | 126" | 126" | 126" | 126" |
| | | | | **For Shade Widths to 84"** | 120" | 120" | 120" | 120" | 120" |
| | | | | **For Shade Widths to 90"** | 108" | 108" | 108" | 108" | 108" |
| | | | | **For Shade Widths to 96"** | 102" | 102" | 102" | 102" | 102" |
| | | | | **For Shade Widths to 102"** | 84" | 84" | 84" | 84" | 84" |
| **10% Sheerweave 4100** | **98"** | **YES** | **YES** | **Non-Railroaded** | | | | | |
| | | | | **Maximum Width** | **96"** | **88"** | **88"** | **96"** | **96"** |
| | | | | | **Maximum Height** | | | | |
| | | | | **For Shade Widths to 54"** | 138" | 120" | 120" | 78" | 120" |
| | | | | **For Shade Widths to 60"** | 126" | 120" | 120" | 78" | 120" |
| | | | | **For Shade Widths to 66"** | 108" | 108" | 108" | 78" | 108" |
| | | | | **For Shade Widths to 72"** | 102" | 102" | 102" | 78" | 102" |
| | | | | **For Shade Widths to 78"** | 90" | 90" | 90" | 78" | 90" |
| | | | | **For Shade Widths to 84"** | 84" | 84" | 84" | 78" | 84" |
| | | | | **For Shade Widths to 88"** | 78" | 78" | 78" | 78" | 78" |
| | | | | **For Shade Widths to 90"** | 78" | N/A | N/A | 78" | 78" |
| | | | | **For Shade Widths to 96"** | 72" | N/A | N/A | 72" | 72" |
| | | | | **Railroaded** | | | | | |
| | | | | **Maximum Width** | **96"** | **96"** | **96"** | **96"** | **96"** |
| | | | | | **Maximum Height** | | | | |
| | | | | **For Shade Widths to 54"** | 120" | 120" | 120" | 78" | 120" |
| | | | | **For Shade Widths to 60"** | 120" | 120" | 120" | 78" | 120" |
| | | | | **For Shade Widths to 66"** | 108" | 108" | 108" | 78" | 108" |
| | | | | **For Shade Widths to 72"** | 102" | 102" | 102" | 78" | 102" |
| | | | | **For Shade Widths to 78"** | 90" | 90" | 90" | 78" | 90" |
| | | | | **For Shade Widths to 84"** | 84" | 84" | 84" | 78" | 84" |
| | | | | **For Shade Widths to 90"** | 78" | 78" | 78" | 78" | 78" |
| | | | | **For Shade Widths to 96"** | 72" | 72" | 72" | 72" | 72" |

# PRODUCT SIZE SPECIFICATIONS – POWERWAND™

**Minimum and Maximum Standards**
Please Note: Shade sizes that are wider than the fabric roll width indicated will be made with the fabric turned width for length (railroaded). The maximum width for non-railroaded shades is the roll width unless otherwise noted.

| Minimum: | Width | Height |
|---|---|---|
| PowerWand | 19" | 12" |

Fabrics turned width for length will have a visible seam when fabricated longer than their maximum roll width less 10". Fabrics turned width for length may have an edge curl. This is not considered a defect in the product.

| Material Name | Roll Width | Railroad Option | Splice/ Seam | | PowerWand™ Shade Without Top Treament | PowerWand™ Shade with Deluxe | PowerWand™ Shade with Fabric | PowerWand™ Shade with Medium | PowerWand™ Shade with Large |
|---|---|---|---|---|---|---|---|---|---|
| **10% Sheerweave 5000** *(R26_03)* | **98"** | **NO** | **NO** | **Non-Railroaded** | | | | | |
| | | | | **Maximum Width** | **98"** | **88"** | **88"** | **98"** | **98"** |
| | | | | | **Maximum Height** | | | | |
| | | | | **For Shade Widths to 60"** | 126" | 90" | 90" | 54" | 90" |
| | | | | **For Shade Widths to 66"** | 108" | 90" | 90" | 54" | 90" |
| | | | | **For Shade Widths to 72"** | 102" | 90" | 90" | 54" | 90" |
| | | | | **For Shade Widths to 84"** | 84" | 84" | 84" | 54" | 84" |
| | | | | **For Shade Widths to 88"** | 78" | 78" | 78" | 54" | 78" |
| | | | | **For Shade Widths to 90"** | 78" | NA | NA | 54" | 78" |
| | | | | **For Shade Widths to 98"** | 60" | NA | NA | 54" | 60" |
| **10% Sheerweave 5000** *(R26_U16, U24, U28, U29)* | **98"** | **NO** | **NO** | **Non-Railroaded** | | | | | |
| | | | | **Maximum Width** | **96"** | **88"** | **88"** | **96"** | **96"** |
| | | | | | **Maximum Height** | | | | |
| | | | | **For Shade Widths to 54"** | 138" | 102" | 102" | 66" | 102" |
| | | | | **For Shade Widths to 60"** | 126" | 102" | 102" | 66" | 102" |
| | | | | **For Shade Widths to 66"** | 108" | 102" | 102" | 66" | 102" |
| | | | | **For Shade Widths to 72"** | 102" | 102" | 102" | 66" | 102" |
| | | | | **For Shade Widths to 78"** | 90" | 90" | 90" | 66" | 90" |
| | | | | **For Shade Widths to 84"** | 84" | 84" | 84" | 66" | 84" |
| | | | | **For Shade Widths to 88"** | 78" | 78" | 78" | 66" | 78" |
| | | | | **For Shade Widths to 90"** | 78" | N/A | N/A | 66" | 78" |
| | | | | **For Shade Widths to 96"** | 72" | N/A | N/A | 66" | 72" |

# PRODUCT SIZE SPECIFICATIONS – POWERWAND™

**Minimum and Maximum Standards**
Please Note: Shade sizes that are wider than the fabric roll width indicated will be made with the fabric turned width for length (railroaded). The maximum width for non-railroaded shades is the roll width unless otherwise noted.

| Minimum: | Width | Height |
|---|---|---|
| PowerWand | 19" | 12" |

Fabrics turned width for length will have a visible seam when fabricated longer than their maximum roll width less 10". Fabrics turned width for length may have an edge curl. This is not considered a defect in the product.

| Material Name | Roll Width | Railroad Option | Splice/ Seam | | PowerWand™ Shade Without Top Treament | PowerWand™ Shade with Deluxe | PowerWand™ Shade with Fabric | PowerWand™ Shade with Medium | PowerWand™ Shade with Large |
|---|---|---|---|---|---|---|---|---|---|
| **Alexandria** | **78"** | **NO** | **NO** | **Non-Railroaded** | | | | | |
| | | | | **Maximum Width** | **78"** | **66"** | **66"** | **78"** | **78"** |
| | | | | | **Maximum Height** | | | | |
| | | | | **For Shade Widths to 66"** | 144" | 144" | 144" | 144" | 144" |
| | | | | **For Shade Widths to 78"** | 144" | NA | NA | 144" | 144" |
| **Astaire** | **94"** | **NO** | **NO** | **Non-Railroaded** | | | | | |
| | | | | **Maximum Width** | **94"** | **NA** | **NA** | **94"** | **94"** |
| | | | | | **Maximum Height** | | | | |
| | | | | **For Shade Widths to 94"** | 144" | NA | NA | 72" | 120" |
| **Avila R Blackout** | **118"** | **YES** | **YES** | **Non-Railroaded** | | | | | |
| | | | | **Maximum Width** | **102"** | **102"** | **102"** | **102"** | **102"** |
| | | | | | **Maximum Height** | | | | |
| | | | | **For Shade Widths to 66"** | 144" | 144" | 144" | 144" | 144" |
| | | | | **For Shade Widths to 72"** | 138" | 138" | 138" | 138" | 138" |
| | | | | **For Shade Widths to 84"** | 120" | 120" | 120" | 120" | 120" |
| | | | | **For Shade Widths to 90"** | 108" | 108" | 108" | 108" | 108" |
| | | | | **For Shade Widths to 96"** | 102" | 102" | 102" | 102" | 102" |
| | | | | **For Shade Widths to 102"** | 84" | 84" | 84" | 84" | 84" |
| | | | | **Railroaded** | | | | | |
| | | | | **Maximum Width** | **102"** | **102"** | **102"** | **102"** | **102"** |
| | | | | | **Maximum Height** | | | | |
| | | | | **For Shade Widths to 84"** | 120" | 120" | 120" | 120" | 120" |
| | | | | **For Shade Widths to 90"** | 108" | 108" | 108" | 108" | 108" |
| | | | | **For Shade Widths to 96"** | 102" | 102" | 102" | 102" | 102" |
| | | | | **For Shade Widths to 102"** | 84" | 84" | 84" | 84" | 84" |
| **Baroque** | **78"** | **NO** | **NO** | **Non-Railroaded** | | | | | |
| | | | | **Maximum Width** | **78"** | **66"** | **66"** | **78"** | **78"** |
| | | | | | **Maximum Height** | | | | |
| | | | | **For Shade Widths to 66"** | 144" | 144" | 144" | 144" | 144" |
| | | | | **For Shade Widths to 72"** | 138" | NA | NA | 138" | 138" |
| | | | | **For Shade Widths to 78"** | 126" | NA | NA | 126" | 126" |
| **Blackout - Solid** | **72"** | **YES** | **YES** | **Non-Railroaded** | | | | | |
| | | | | **Maximum Width** | **72"** | **60"** | **N/A** | **72"** | **72"** |
| | | | | | **Maximum Height** | | | | |
| | | | | **For Shade Widths to 60"** | 144" | 144" | N/A | 144" | 144" |
| | | | | **For Shade Widths to 66"** | 144" | NA | NA | 144" | 144" |
| | | | | **For Shade Widths to 72"** | 138" | NA | NA | 138" | 138" |
| | | | | **Railroaded** | | | | | |
| | | | | **Maximum Width** | **108"** | **108"** | **N/A** | **108"** | **108"** |
| | | | | | **Maximum Height** | | | | |
| | | | | **For Shade Widths to 66"** | 144" | 144" | N/A | 144" | 144" |
| | | | | **For Shade Widths to 72"** | 138" | 138" | N/A | 138" | 138" |
| | | | | **For Shade Widths to 84"** | 120" | 120" | N/A | 120" | 120" |
| | | | | **For Shade Widths to 90"** | 108" | 108" | N/A | 108" | 108" |
| | | | | **For Shade Widths to 96"** | 102" | 102" | N/A | 102" | 102" |
| | | | | **For Shade Widths to 102"** | 84" | 84" | N/A | 84" | 84" |
| | | | | **For Shade Widths to 108"** | 66" | 66" | N/A | 66" | 66" |

# PRODUCT SIZE SPECIFICATIONS – POWERWAND™

**Minimum and Maximum Standards**
Please Note: Shade sizes that are wider than the fabric roll width indicated will be made with the fabric turned width for length (railroaded). The maximum width for non-railroaded shades is the roll width unless otherwise noted.

| Minimum: | Width | Height |
|---|---|---|
| PowerWand | 19" | 12" |

Fabrics turned width for length will have a visible seam when fabricated longer than their maximum roll width less 10". Fabrics turned width for length may have an edge curl. This is not considered a defect in the product.

| Material Name | Roll Width | Railroad Option | Splice/ Seam | | PowerWand™ Shade Without Top Treament | PowerWand™ Shade with Deluxe | PowerWand™ Shade with Fabric | PowerWand™ Shade with Medium | PowerWand™ Shade with Large |
|---|---|---|---|---|---|---|---|---|---|
| **Brilliance** | **118"** | **NO** | **NO** | **Non-Railroaded** | | | | | |
| | | | | **Maximum Width** | **114"** | **108¨** | **108"** | **114"** | **114"** |
| | | | | | **Maximum Height** | | | | |
| | | | | **For Shade Widths to 102"** | 144" | 144" | 144" | 144" | 144" |
| | | | | **For Shade Widths to 108"** | 108" | 108" | 108" | 108" | 108" |
| | | | | **For Shade Widths to 114"** | 84" | NA | NA | 84" | 84" |
| **Brilliance Blackout** | **118"** | **NO** | **NO** | **Non-Railroaded** | | | | | |
| | | | | **Maximum Width** | **102"** | **102"** | **102"** | **102"** | **102"** |
| | | | | | **Maximum Height** | | | | |
| | | | | **For Shade Widths to 66"** | 144" | 144" | 144" | 114" | 144" |
| | | | | **For Shade Widths to 72"** | 138" | 138" | 138" | 114" | 138" |
| | | | | **For Shade Widths to 84"** | 120" | 120" | 120" | 114" | 120" |
| | | | | **For Shade Widths to 90"** | 108" | 108" | 108" | 108" | 108" |
| | | | | **For Shade Widths to 96"** | 102" | 102" | 102" | 102" | 102" |
| | | | | **For Shade Widths to 102"** | 84" | 84" | 84" | 84" | 84" |
| **Carrara** | **110"** | **NO** | **NO** | **Non-Railroaded** | | | | | |
| | | | | **Maximum Width** | **110"** | **100"** | **100"** | **110"** | **110"** |
| | | | | | **Maximum Height** | | | | |
| | | | | **For Shade Widths to 66"** | 144" | 144" | 144" | 144" | 144" |
| | | | | **For Shade Widths to 78"** | 126" | 126" | 126" | 126" | 126" |
| | | | | **For Shade Widths to 90"** | 108" | 108" | 108" | 108" | 108" |
| | | | | **For Shade Widths to 100"** | 84" | 84" | 84" | 84" | 84" |
| | | | | **For Shade Widths to 102"** | 84" | NA | NA | 84" | 84" |
| | | | | **For Shade Widths to 108"** | 66" | NA | NA | 66" | 66" |
| | | | | **For Shade Widths to 110"** | 48" | NA | NA | 48" | 48" |
| **Carrara Blackout** | **110"** | **NO** | **NO** | **Non-Railroaded** | | | | | |
| | | | | **Maximum Width** | **96"** | **96"** | **96"** | **96"** | **96"** |
| | | | | | **Maximum Height** | | | | |
| | | | | **For Shade Widths to 60"** | 126" | 126" | 126" | 96" | 126" |
| | | | | **For Shade Widths to 72"** | 102" | 102" | 102" | 96" | 102" |
| | | | | **For Shade Widths to 78"** | 90" | 90" | 90" | 90" | 90" |
| | | | | **For Shade Widths to 84"** | 84" | 84" | 84" | 84" | 84" |
| | | | | **For Shade Widths to 90"** | 78" | 78" | 78" | 78" | 78" |
| | | | | **For Shade Widths to 96"** | 72" | 72" | 72" | 72" | 72" |
| **Claudio** | **110"** | **NO** | **NO** | **Non-Railroaded** | | | | | |
| | | | | **Maximum Width** | **110"** | **100"** | **100"** | **110"** | **110"** |
| | | | | | **Maximum Height** | | | | |
| | | | | **For Shade Widths to 100"** | 144" | 144" | 144" | 144" | 144" |
| | | | | **For Shade Widths to 102"** | 144" | NA | NA | 144" | 144" |
| | | | | **For Shade Widths to 110"** | 84" | NA | NA | 84" | 84" |
| **Claudio Blackout** | **110"** | **NO** | **NO** | **Non-Railroaded** | | | | | |
| | | | | **Maximum Width** | **102"** | **100"** | **100"** | **102"** | **102"** |
| | | | | | **Maximum Height** | | | | |
| | | | | **For Shade Widths to 66"** | 144" | 144" | 144" | 114" | 144" |
| | | | | **For Shade Widths to 72"** | 138" | 138" | 138" | 114" | 138" |
| | | | | **For Shade Widths to 78"** | 126" | 126" | 126" | 114" | 126" |
| | | | | **For Shade Widths to 84"** | 120" | 120" | 120" | 114" | 120" |
| | | | | **For Shade Widths to 90"** | 108" | 108" | 108" | 108" | 108" |
| | | | | **For Shade Widths to 96"** | 102" | 102" | 102" | 102" | 102" |
| | | | | **For Shade Widths to 100"** | 84" | 84" | 84" | 84" | 84" |
| | | | | **For Shade Widths to 102"** | 84" | NA | NA | 84" | 84" |

# PRODUCT SIZE SPECIFICATIONS – POWERWAND™

**Minimum and Maximum Standards**
Please Note: Shade sizes that are wider than the fabric roll width indicated will be made with the fabric turned width for length (railroaded). The maximum width for non-railroaded shades is the roll width unless otherwise noted.

| Minimum: | Width | Height |
|---|---|---|
| PowerWand | 19" | 12" |

Fabrics turned width for length will have a visible seam when fabricated longer than their maximum roll width less 10". Fabrics turned width for length may have an edge curl. This is not considered a defect in the product.

| Material Name | Roll Width | Railroad Option | Splice/ Seam | | PowerWand™ Shade Without Top Treament | PowerWand™ Shade with Deluxe | PowerWand™ Shade with Fabric | PowerWand™ Shade with Medium | PowerWand™ Shade with Large |
|---|---|---|---|---|---|---|---|---|---|
| **Cusco** | **110"** | **YES** | **YES** | **Non-Railroaded** | | | | | |
| | | | | **Maximum Width** | **102"** | **100"** | **100"** | **102"** | **102"** |
| | | | | | **Maximum Height** | | | | |
| | | | | **For Shade Widths to 66"** | 144" | 144" | 144" | 130" | 144" |
| | | | | **For Shade Widths to 72"** | 138" | 138" | 138" | 130" | 138" |
| | | | | **For Shade Widths to 84"** | 120" | 120" | 120" | 120" | 120" |
| | | | | **For Shade Widths to 90"** | 108" | 108" | 108" | 108" | 108" |
| | | | | **For Shade Widths to 96"** | 102" | 102" | 102" | 102" | 102" |
| | | | | **For Shade Widths to 100"** | 84" | 84" | 84" | 84" | 84" |
| | | | | **For Shade Widths to 102"** | 84" | NA | NA | 84" | 84" |
| | | | | **Railroaded** | | | | | |
| | | | | **Maximum Width** | **102"** | **102"** | **102"** | **102"** | **102"** |
| | | | | | **Maximum Height** | | | | |
| | | | | **For Shade Widths to 66"** | 144" | 144" | 144" | 130" | 144" |
| | | | | **For Shade Widths to 72"** | 138" | 138" | 138" | 130" | 138" |
| | | | | **For Shade Widths to 84"** | 120" | 120" | 120" | 120" | 120" |
| | | | | **For Shade Widths to 90"** | 108" | 108" | 108" | 108" | 108" |
| | | | | **For Shade Widths to 96"** | 102" | 102" | 102" | 102" | 102" |
| | | | | **For Shade Widths to 102"** | 84" | 84" | 84" | 84" | 84" |
| **Darien** | **90"** | **NO** | **NO** | **Non-Railroaded** | | | | | |
| | | | | **Maximum Width** | **90"** | **80"** | **80"** | **90"** | **90"** |
| | | | | | **Maximum Height** | | | | |
| | | | | **For Shade Widths to 80"** | 144" | 144" | 144" | 144" | 144" |
| | | | | **For Shade Widths to 90"** | 144" | NA | NA | 144" | 144" |
| **Drizzle** | **94"** | **YES** | **YES** | **Non-Railroaded** | | | | | |
| | | | | **Maximum Width** | **94"** | **84"** | **84"** | **94"** | **94"** |
| | | | | | **Maximum Height** | | | | |
| | | | | **For Shade Widths to 66"** | 144" | 144" | 144" | 144" | 144" |
| | | | | **For Shade Widths to 78"** | 144" | 144" | 144" | 144" | 144" |
| | | | | **For Shade Widths to 84"** | 144" | 144" | 144" | 144" | 144" |
| | | | | **For Shade Widths to 90"** | 144" | NA | NA | 144" | 144" |
| | | | | **For Shade Widths over 90"** | 144" | NA | NA | 144" | 144" |
| | | | | **Railroaded** | | | | | |
| | | | | **Maximum Width** | **114"** | **114"** | **114"** | **114"** | **114"** |
| | | | | | **Maximum Height** | | | | |
| | | | | **For Shade Widths to 102"** | 120" | 120" | 120" | 120" | 120" |
| | | | | **For Shade Widths to 108"** | 108" | 108" | 108" | 108" | 108" |
| | | | | **For Shade Widths to 114"** | 84" | 84" | 84" | 84" | 84" |
| **Fiona** | **78"** | **NO** | **NO** | **Non-Railroaded** | | | | | |
| | | | | **Maximum Width** | **78"** | **70"** | **70"** | **78"** | **78"** |
| | | | | | **Maximum Height** | | | | |
| | | | | **For Shade Widths to 66"** | 144" | 144" | 144" | 144" | 144" |
| | | | | **For Shade Widths to 70"** | 138" | 138" | 138" | 138" | 138" |
| | | | | **For Shade Widths to 72"** | 138" | NA | NA | 138" | 138" |
| | | | | **For Shade Widths to 78"** | 126" | NA | NA | 126" | 126" |
| **Flocke Blackout** | **94"** | **YES** | **YES** | **Non-Railroaded** | | | | | |
| | | | | **Maximum Width** | **94"** | **84"** | **84"** | **94"** | **94"** |
| | | | | | **Maximum Height** | | | | |
| | | | | **For Shade Widths to 66"** | 108" | 108" | 108" | 108" | 108" |
| | | | | **For Shade Widths to 72"** | 102" | 102" | 102" | 102" | 102" |
| | | | | **For Shade Widths to 84"** | 84" | 84" | 84" | 84" | 84" |
| | | | | **For Shade Widths to 90"** | 78" | NA | NA | 78" | 78" |
| | | | | **For Shade Widths to 94"** | 72" | NA | NA | 72" | 72" |
| | | | | **Railroaded** | | | | | |
| | | | | **Maximum Width** | **102"** | **102"** | **102"** | **102"** | **102"** |
| | | | | | **Maximum Height** | | | | |
| | | | | **For Shade Widths to 66"** | 108" | 108" | 108" | 108" | 108" |
| | | | | **For Shade Widths to 72"** | 102" | 102" | 102" | 102" | 102" |
| | | | | **For Shade Widths to 84"** | 84" | 84" | 84" | 84" | 84" |
| | | | | **For Shade Widths to 90"** | 78" | 78" | 78" | 78" | 78" |
| | | | | **For Shade Widths to 96"** | 72" | 72" | 72" | 72" | 72" |
| | | | | **For Shade Widths to 102"** | 60" | 60" | 60" | 60" | 60" |

# PRODUCT SIZE SPECIFICATIONS – POWERWAND™

**Minimum and Maximum Standards**
Please Note: Shade sizes that are wider than the fabric roll width indicated will be made with the fabric turned width for length (railroaded). The maximum width for non-railroaded shades is the roll width unless otherwise noted.

| Minimum: | Width | Height |
|---|---|---|
| PowerWand | 19" | 12" |

Fabrics turned width for length will have a visible seam when fabricated longer than their maximum roll width less 10". Fabrics turned width for length may have an edge curl. This is not considered a defect in the product.

| Material Name | Roll Width | Railroad Option | Splice/ Seam | | PowerWand™ Shade Without Top Treament | PowerWand™ Shade with Deluxe | PowerWand™ Shade with Fabric | PowerWand™ Shade with Medium | PowerWand™ Shade with Large |
|---|---|---|---|---|---|---|---|---|---|
| Hayworth | 94" | YES | YES | Non-Railroaded | | | | | |
| | | | | Maximum Width | 94" | 84" | 84" | 94" | 94" |
| | | | | | Maximum Height | | | | |
| | | | | For Shade Widths to 84" | 144" | 144" | 144" | 144" | 144" |
| | | | | For Shade Widths to 94" | 144" | NA | NA | 144" | 144" |
| | | | | Railroaded | | | | | |
| | | | | Maximum Width | 114" | 114" | 114" | 114" | 114" |
| | | | | | Maximum Height | | | | |
| | | | | For Shade Widths to 102" | 144" | 144" | 144" | 144" | 144" |
| | | | | For Shade Widths to 108" | 108" | 108" | 108" | 108" | 108" |
| | | | | For Shade Widths to 114" | 84" | 84" | 84" | 84" | 84" |
| Illusion | 72" | YES | NO | Non-Railroaded | | | | | |
| | | | | Maximum Width | 72" | 60" | 60" | 72" | 72" |
| | | | | | Maximum Height | | | | |
| | | | | For Shade Widths to 60" | 144" | 144" | 144" | 144" | 144" |
| | | | | For Shade Widths to 72" | 144" | NA | NA | 144" | 144" |
| | | | | Railroaded | | | | | |
| | | | | Maximum Width | 114" | 114" | 114" | 114" | 114" |
| | | | | | Maximum Height | | | | |
| | | | | For Shade Widths to 114" | 60" | 60" | 60" | 60" | 60" |
| Jasper | 110" | YES | YES | Non-Railroaded | | | | | |
| | | | | Maximum Width | 108" | 100" | 100" | 108" | 108" |
| | | | | | Maximum Height | | | | |
| | | | | For Shade Widths to 66" | 144" | 144" | 144" | 144" | 144" |
| | | | | For Shade Widths to 72" | 138" | 138" | 138" | 138" | 138" |
| | | | | For Shade Widths to 84" | 120" | 120" | 120" | 120" | 120" |
| | | | | For Shade Widths to 90" | 108" | 108" | 108" | 108" | 108" |
| | | | | For Shade Widths to 96" | 102" | 102" | 102" | 102" | 102" |
| | | | | For Shade Widths to 100" | 84" | 84" | 84" | 84" | 84" |
| | | | | For Shade Widths to 102" | 84" | NA | NA | 84" | 84" |
| | | | | For Shade Widths to 108" | 66" | NA | NA | 66" | 66" |
| | | | | Railroaded | | | | | |
| | | | | Maximum Width | 114" | 114" | 114" | 114" | 114" |
| | | | | | Maximum Height | | | | |
| | | | | For Shade Widths to 66" | 144" | 144" | 144" | 144" | 144" |
| | | | | For Shade Widths to 72" | 138" | 138" | 138" | 138" | 138" |
| | | | | For Shade Widths to 84" | 120" | 120" | 120" | 120" | 120" |
| | | | | For Shade Widths to 90" | 108" | 108" | 108" | 108" | 108" |
| | | | | For Shade Widths to 96" | 102" | 102" | 102" | 102" | 102" |
| | | | | For Shade Widths to 102" | 84" | 84" | 84" | 84" | 84" |
| | | | | For Shade Widths to 108" | 66" | 66" | 66" | 66" | 66" |
| | | | | For Shade Widths to 114" | 48" | 48" | 48" | 48" | 48" |
| Linview | 122" | YES | YES | Non-Railroaded | | | | | |
| | | | | Maximum Width | 108" | 108" | 108" | 108" | 108" |
| | | | | | Maximum Height | | | | |
| | | | | For Shade Widths to 96" | 144" | 144" | 144" | 144" | 144" |
| | | | | For Shade Widths to 102" | 144" | 144" | 144" | 144" | 144" |
| | | | | For Shade Widths to 108" | 108" | 108" | 108" | 108" | 108" |
| | | | | Railroaded | | | | | |
| | | | | Maximum Width | 108" | 108" | 108" | 108" | 108" |
| | | | | | Maximum Height | | | | |
| | | | | For Shade Widths to 96" | 120" | 120" | 120" | 120" | 120" |
| | | | | For Shade Widths to 102" | 120" | 120" | 120" | 120" | 120" |
| | | | | For Shade Widths to 108" | 108" | 108" | 108" | 108" | 108" |

# PRODUCT SIZE SPECIFICATIONS – POWERWAND™

**Minimum and Maximum Standards**
Please Note: Shade sizes that are wider than the fabric roll width indicated will be made with the fabric turned width for length (railroaded). The maximum width for non-railroaded shades is the roll width unless otherwise noted.

| Minimum: | Width | Height |
|---|---|---|
| PowerWand | 19" | 12" |

Fabrics turned width for length will have a visible seam when fabricated longer than their maximum roll width less 10". Fabrics turned width for length may have an edge curl. This is not considered a defect in the product.

| Material Name | Roll Width | Railroad Option | Splice/ Seam | | PowerWand™ Shade Without Top Treament | PowerWand™ Shade with Deluxe | PowerWand™ Shade with Fabric | PowerWand™ Shade with Medium | PowerWand™ Shade with Large |
|---|---|---|---|---|---|---|---|---|---|
| **Linview Blackout** | **94"** | **NO** | **NO** | **Non-Railroaded** | | | | | |
| | | | | **Maximum Width** | **94"** | **84"** | **84"** | **94"** | **94"** |
| | | | | | **Maximum Height** | | | | |
| | | | | **For Shade Widths to 66"** | 144" | 144" | 144" | 144" | 144" |
| | | | | **For Shade Widths to 72"** | 138" | 138" | 138" | 138" | 138" |
| | | | | **For Shade Widths to 84"** | 120" | 120" | 120" | 120" | 120" |
| | | | | **For Shade Widths to 90"** | 108" | NA | NA | 108" | 108" |
| | | | | **For Shade Widths to 94"** | 102" | NA | NA | 102" | 102" |
| **Montero** | **94"** | **NO** | **NO** | **Non-Railroaded** | | | | | |
| | | | | **Maximum Width** | **94"** | **84"** | **84"** | **94"** | **94"** |
| | | | | | **Maximum Height** | | | | |
| | | | | **For Shade Widths to 72"** | 138" | 138" | 138" | 132" | 138" |
| | | | | **For Shade Widths to 84"** | 120" | 120" | 120" | 120" | 120" |
| | | | | **For Shade Widths to 90"** | 108" | NA | NA | 108" | 108" |
| | | | | **For Shade Widths to 94"** | 102" | NA | NA | 102" | 102" |
| **Moravia** | **96"** | **NO** | **NO** | **Non-Railroaded** | | | | | |
| | | | | **Maximum Width** | **96"** | **84"** | **84"** | **96"** | **96"** |
| | | | | | **Maximum Height** | | | | |
| | | | | **For Shade Widths to 84"** | 144" | 144" | 144" | 138" | 144" |
| | | | | **For Shade Widths to 96"** | 144" | NA | NA | 138" | 144" |
| **Santa Cruz** | **94"** | **NO** | **NO** | **Non-Railroaded** | | | | | |
| | | | | **Maximum Width** | **94"** | **84"** | **84"** | **94"** | **94"** |
| | | | | | **Maximum Height** | | | | |
| | | | | **For Shade Widths to 72"** | 138" | 138" | 138" | 138" | 138" |
| | | | | **For Shade Widths to 84"** | 120" | 120" | 120" | 120" | 120" |
| | | | | **For Shade Widths to 90"** | 108" | NA | NA | 108" | 108" |
| | | | | **For Shade Widths to 94"** | 102" | NA | NA | 102" | 102" |
| **Santa Cruz Blackout** | **94"** | **NO** | **NO** | **Non-Railroaded** | | | | | |
| | | | | **Maximum Width** | **94"** | **84"** | **84"** | **94"** | **94"** |
| | | | | | **Maximum Height** | | | | |
| | | | | **For Shade Widths to 60"** | 126" | 126" | 126" | 102" | 126" |
| | | | | **For Shade Widths to 72"** | 102" | 102" | 102" | 102" | 102" |
| | | | | **For Shade Widths to 78"** | 90" | 90" | 90" | 90" | 90" |
| | | | | **For Shade Widths to 84"** | 84" | 84" | 84" | 84" | 84" |
| | | | | **For Shade Widths to 90"** | 78" | NA | NA | 78" | 78" |
| | | | | **For Shade Widths to 94"** | 72" | NA | NA | 72" | 72" |
| **Scala Blackout** | **110"** | **YES** | **YES** | **Non-Railroaded** | | | | | |
| | | | | **Maximum Width** | **102"** | **96"** | **N/A** | **102"** | **102"** |
| | | | | | **Maximum Height** | | | | |
| | | | | **For Shade Widths to 66"** | 144" | 144" | N/A | 144" | 144" |
| | | | | **For Shade Widths to 72"** | 138" | 138" | N/A | 138" | 138" |
| | | | | **For Shade Widths to 84"** | 120" | 120" | N/A | 120" | 120" |
| | | | | **For Shade Widths to 90"** | 108" | 108" | N/A | 108" | 108" |
| | | | | **For Shade Widths to 96"** | 102" | 102" | N/A | 102" | 102" |
| | | | | **For Shade Widths to 102"** | 84" | NA | NA | 84" | 84" |
| | | | | **Railroaded** | | | | | |
| | | | | **Maximum Width** | **102"** | **102"** | **N/A** | **102"** | **102"** |
| | | | | | **Maximum Height** | | | | |
| | | | | **For Shade Widths to 66"** | 144" | 144" | N/A | 144" | 144" |
| | | | | **For Shade Widths to 72"** | 138" | 138" | N/A | 138" | 138" |
| | | | | **For Shade Widths to 84"** | 120" | 120" | N/A | 120" | 120" |
| | | | | **For Shade Widths to 90"** | 108" | 108" | N/A | 108" | 108" |
| | | | | **For Shade Widths to 96"** | 102" | 102" | N/A | 102" | 102" |
| | | | | **For Shade Widths to 102"** | 84" | 84" | N/A | 84" | 84" |

# PRODUCT SIZE SPECIFICATIONS – POWERWAND™

**Minimum and Maximum Standards**
Please Note: Shade sizes that are wider than the fabric roll width indicated will be made with the fabric turned width for length (railroaded). The maximum width for non-railroaded shades is the roll width unless otherwise noted.

| Minimum: | Width | Height |
|---|---|---|
| PowerWand | 19" | 12" |

Fabrics turned width for length will have a visible seam when fabricated longer than their maximum roll width less 10". Fabrics turned width for length may have an edge curl. This is not considered a defect in the product.

| Material Name | Roll Width | Railroad Option | Splice/ Seam | | PowerWand™ Shade Without Top Treament | PowerWand™ Shade with Deluxe | PowerWand™ Shade with Fabric | PowerWand™ Shade with Medium | PowerWand™ Shade with Large |
|---|---|---|---|---|---|---|---|---|---|
| Sheerweave 7200R | 118" | NO | NO | Non-Railroaded | | | | | |
| | | | | Maximum Width | 102" | 102" | 102" | 102" | 102" |
| | | | | | Maximum Height | | | | |
| | | | | For Shade Widths to 66" | 144" | 144" | 144" | 114" | 144" |
| | | | | For Shade Widths to 72" | 138" | 138" | 138" | 114" | 138" |
| | | | | For Shade Widths to 78" | 126" | 126" | 126" | 114" | 126" |
| | | | | For Shade Widths to 84" | 120" | 120" | 120" | 114" | 120" |
| | | | | For Shade Widths to 90" | 108" | 108" | 108" | 108" | 108" |
| | | | | For Shade Widths to 96" | 102" | 102" | 102" | 102" | 102" |
| | | | | For Shade Widths to 102" | 84" | 84" | 84" | 84" | 84" |
| Sheerweave 7250R | 118" | NO | NO | Non-Railroaded | | | | | |
| | | | | Maximum Width | 96" | 96" | 96" | 96" | 96" |
| | | | | | Maximum Height | | | | |
| | | | | For Shade Widths to 96" | 120" | 120" | 120" | 120" | 120" |
| Sheerweave 7400 | 118" | NO | NO | Non-Railroaded | | | | | |
| | | | | Maximum Width | 96" | 96" | 96" | 96" | 96" |
| | | | | | Maximum Height | | | | |
| | | | | For Shade Widths to 54" | 138" | 132" | 132" | 84" | 132" |
| | | | | For Shade Widths to 60" | 126" | 126" | 126" | 84" | 126" |
| | | | | For Shade Widths to 66" | 108" | 108" | 108" | 84" | 108" |
| | | | | For Shade Widths to 72" | 102" | 102" | 102" | 84" | 102" |
| | | | | For Shade Widths to 78" | 90" | 90" | 90" | 84" | 90" |
| | | | | For Shade Widths to 84" | 84" | 84" | 84" | 84" | 84" |
| | | | | For Shade Widths to 90" | 78" | 78" | 78" | 78" | 78" |
| | | | | For Shade Widths to 96" | 72" | 72" | 72" | 72" | 72" |
| Sheerweave 7450 | 118" | NO | NO | Non-Railroaded | | | | | |
| | | | | Maximum Width | 108" | 108" | 108" | 108" | 108" |
| | | | | | Maximum Height | | | | |
| | | | | For Shade Widths to 96" | 144" | 144" | 144" | 132" | 144" |
| | | | | For Shade Widths to 102" | 144" | 144" | 144" | 132" | 144" |
| | | | | For Shade Widths to 108" | 108" | 108" | 108" | 108" | 108" |
| Sheerweave 7500 | 118" | NO | NO | Non-Railroaded | | | | | |
| | | | | Maximum Width | 96" | 96" | N/A | 96" | 96" |
| | | | | | Maximum Height | | | | |
| | | | | For Shade Widths to 66" | 120" | 120" | NA | 120" | 120" |
| | | | | For Shade Widths to 72" | 120" | 120" | N/A | 120" | 120" |
| | | | | For Shade Widths to 78" | 120" | 120" | N/A | 120" | 120" |
| | | | | For Shade Widths to 84" | 120" | 120" | N/A | 120" | 120" |
| | | | | For Shade Widths to 90" | 108" | 108" | N/A | 108" | 108" |
| | | | | For Shade Widths to 96" | 102" | 102" | N/A | 102" | 102" |
| Sheerweave 7500R | 118" | NO | NO | Non-Railroaded | | | | | |
| | | | | Maximum Width | 102" | 102" | N/A | 102" | 102" |
| | | | | | Maximum Height | | | | |
| | | | | For Shade Widths to 66" | 144" | 144" | NA | 144" | 144" |
| | | | | For Shade Widths to 72" | 138" | 138" | N/A | 138" | 138" |
| | | | | For Shade Widths to 78" | 126" | 126" | N/A | 126" | 126" |
| | | | | For Shade Widths to 84" | 120" | 120" | N/A | 120" | 120" |
| | | | | For Shade Widths to 90" | 108" | 108" | N/A | 108" | 108" |
| | | | | For Shade Widths to 96" | 102" | 102" | N/A | 102" | 102" |
| | | | | For Shade Widths to 102" | 84" | 84" | N/A | 84" | 84" |

# PRODUCT SIZE SPECIFICATIONS – POWERWAND™

**Minimum and Maximum Standards**
Please Note: Shade sizes that are wider than the fabric roll width indicated will be made with the fabric turned width for length (railroaded). The maximum width for non-railroaded shades is the roll width unless otherwise noted.

| Minimum: | Width | Height |
|---|---|---|
| PowerWand | 19" | 12" |

Fabrics turned width for length will have a visible seam when fabricated longer than their maximum roll width less 10". Fabrics turned width for length may have an edge curl. This is not considered a defect in the product.

| Material Name | Roll Width | Railroad Option | Splice/ Seam | | PowerWand™ Shade Without Top Treament | PowerWand™ Shade with Deluxe | PowerWand™ Shade with Fabric | PowerWand™ Shade with Medium | PowerWand™ Shade with Large |
|---|---|---|---|---|---|---|---|---|---|
| Sheerweave 7600 | 118" | NO | NO | Non-Railroaded | | | | | |
| | | | | Maximum Width | 102" | 102" | 102" | 102" | 102" |
| | | | | | Maximum Height | | | | |
| | | | | For Shade Widths to 66" | 144" | 144" | 144" | 126" | 144" |
| | | | | For Shade Widths to 72" | 138" | 138" | 138" | 126" | 138" |
| | | | | For Shade Widths to 78" | 126" | 126" | 126" | 126" | 126" |
| | | | | For Shade Widths to 84" | 120" | 120" | 120" | 120" | 120" |
| | | | | For Shade Widths to 90" | 108" | 108" | 108" | 108" | 108" |
| | | | | For Shade Widths to 96" | 102" | 102" | 102" | 102" | 102" |
| | | | | For Shade Widths to 102" | 84" | 84" | 84" | 84" | 84" |
| Sheerweave 7650 | 118" | NO | NO | Non-Railroaded | | | | | |
| | | | | Maximum Width | 108" | 108" | 108" | 108" | 108" |
| | | | | | Maximum Height | | | | |
| | | | | For Shade Widths to 96" | 144" | 144" | 144" | 144" | 144" |
| | | | | For Shade Widths to 102" | 144" | 144" | 144" | 144" | 144" |
| | | | | For Shade Widths to 108" | 108" | 108" | 108" | 108" | 108" |
| Sheerweave 7700R | 118" | NO | NO | Non-Railroaded | | | | | |
| | | | | Maximum Width | 96" | 96" | 96" | 96" | 96" |
| | | | | | Maximum Height | | | | |
| | | | | For Shade Widths to 54" | 138" | 138" | 138" | 96" | 138" |
| | | | | For Shade Widths to 60" | 126" | 126" | 126" | 96" | 126" |
| | | | | For Shade Widths to 66" | 108" | 108" | 108" | 96" | 108" |
| | | | | For Shade Widths to 72" | 102" | 102" | 102" | 96" | 102" |
| | | | | For Shade Widths to 78" | 90" | 90" | 90" | 90" | 90" |
| | | | | For Shade Widths to 84" | 84" | 84" | 84" | 84" | 84" |
| | | | | For Shade Widths to 90" | 78" | 78" | 78" | 78" | 78" |
| | | | | For Shade Widths to 96" | 72" | 72" | 72" | 72" | 72" |
| Sheerweave 7750R | 118" | NO | NO | Non-Railroaded | | | | | |
| | | | | Maximum Width | 98" | 98" | 98" | 98" | 98" |
| | | | | | Maximum Height | | | | |
| | | | | For Shade Widths to 66" | 120" | 120" | 120" | 120" | 120" |
| | | | | For Shade Widths to 72" | 120" | 120" | 120" | 120" | 120" |
| | | | | For Shade Widths to 78" | 120" | 120" | 120" | 120" | 120" |
| | | | | For Shade Widths to 84" | 120" | 120" | 120" | 120" | 120" |
| | | | | For Shade Widths to 90" | 108" | 108" | 108" | 108" | 108" |
| | | | | For Shade Widths to 96" | 102" | 102" | 102" | 102" | 102" |
| | | | | For Shade Widths to 98" | 84" | 84" | 84" | 84" | 84" |
| Sorrento | 108" | NO | NO | Non-Railroaded | | | | | |
| | | | | Maximum Width | 108" | 96" | 96" | 108" | 108" |
| | | | | | Maximum Height | | | | |
| | | | | For Shade Widths to 96" | 144" | 144" | 144" | 108" | 144" |
| | | | | For Shade Widths to 102" | 144" | NA | NA | 108" | 144" |
| | | | | For Shade Widths to 108" | 108" | NA | NA | 108" | 108" |
| Sunscreen (SW) 7000 | 118" | YES | YES | Non-Railroaded | | | | | |
| | | | | Maximum Width | 96" | 96" | 96" | 96" | 96" |
| | | | | | Maximum Height | | | | |
| | | | | For Shade Widths to 60" | 126" | 126" | 126" | 96" | 126" |
| | | | | For Shade Widths to 72" | 102" | 102" | 102" | 96" | 102" |
| | | | | For Shade Widths to 78" | 90" | 90" | 90" | 90" | 90" |
| | | | | For Shade Widths to 84" | 84" | 84" | 84" | 84" | 84" |
| | | | | For Shade Widths to 90" | 78" | 78" | 78" | 78" | 78" |
| | | | | For Shade Widths to 96" | 72" | 72" | 72" | 72" | 72" |
| | | | | Railroaded | | | | | |
| | | | | Maximum Width | 96" | 96" | 96" | 96" | 96" |
| | | | | | Maximum Height | | | | |
| | | | | For Shade Widths to 60" | 126" | 126" | 126" | 96" | 126" |
| | | | | For Shade Widths to 72" | 102" | 102" | 102" | 96" | 102" |
| | | | | For Shade Widths to 78" | 90" | 90" | 90" | 90" | 90" |
| | | | | For Shade Widths to 84" | 84" | 84" | 84" | 84" | 84" |
| | | | | For Shade Widths to 90" | 78" | 78" | 78" | 78" | 78" |
| | | | | For Shade Widths to 96" | 72" | 72" | 72" | 72" | 72" |

# PRODUCT SIZE SPECIFICATIONS – POWERWAND™

**Minimum and Maximum Standards**
Please Note: Shade sizes that are wider than the fabric roll width indicated will be made with the fabric turned width for length (railroaded). The maximum width for non-railroaded shades is the roll width unless otherwise noted.

| Minimum: | Width | Height |
|---|---|---|
| PowerWand | 19" | 12" |

Fabrics turned width for length will have a visible seam when fabricated longer than their maximum roll width less 10". Fabrics turned width for length may have an edge curl. This is not considered a defect in the product.

| Material Name | Roll Width | Railroad Option | Splice/ Seam | | PowerWand™ Shade Without Top Treament | PowerWand™ Shade with Deluxe | PowerWand™ Shade with Fabric | PowerWand™ Shade with Medium | PowerWand™ Shade with Large |
|---|---|---|---|---|---|---|---|---|---|
| **Tundra** | **94"** | **NO** | **NO** | **Non-Railroaded** | | | | | |
| | | | | **Maximum Width** | **94"** | **84"** | **84"** | **94"** | **94"** |
| | | | | | **Maximum Height** | | | | |
| | | | | **For Shade Widths to 84"** | 144" | 144" | 144" | 144" | 144" |
| | | | | **For Shade Widths to 90"** | 144" | N/A | N/A | 144" | 144" |
| | | | | **For Shade Widths to 94"** | 144" | N/A | N/A | 144" | 144" |
| **Tundra Blackout** | **94"** | **NO** | **NO** | **Non-Railroaded** | | | | | |
| | | | | **Maximum Width** | **94"** | **84"** | **84"** | **94"** | **94"** |
| | | | | | **Maximum Height** | | | | |
| | | | | **For Shade Widths to 66"** | 120" | 120" | 120" | 120" | 120" |
| | | | | **For Shade Widths to 72"** | 120" | 120" | 120" | 120" | 120" |
| | | | | **For Shade Widths to 78"** | 120" | 120" | 120" | 120" | 120" |
| | | | | **For Shade Widths to 84"** | 120" | 120" | 120" | 120" | 120" |
| | | | | **For Shade Widths to 90"** | 108" | N/A | N/A | 108" | 108" |
| | | | | **For Shade Widths to 94"** | 102" | N/A | N/A | 102" | 102" |
| **Uptown** *(R79_02)* | **78"** | **YES** | **NO** | **Non-Railroaded** | | | | | |
| | | | | **Maximum Width** | **78"** | **66¨** | **66"** | **78"** | **78"** |
| | | | | | **Maximum Height** | | | | |
| | | | | **For Shade Widths to 66"** | 144" | 144" | 144" | 144" | 144" |
| | | | | **For Shade Widths to 78"** | 144" | NA | NA | 144" | 144" |
| | | | | **Railroaded** | | | | | |
| | | | | **Maximum Width** | **114"** | **114¨** | **114"** | **114"** | **114"** |
| | | | | | **Maximum Height** | | | | |
| | | | | **For Shade Widths to 114"** | 66" | 66" | 66" | 66" | 66" |
| **Uptown Room Darkening** *(R79_01)* | **78"** | **YES** | **NO** | **Non-Railroaded** | | | | | |
| | | | | **Maximum Width** | **78"** | **66¨** | **66"** | **78"** | **78"** |
| | | | | | **Maximum Height** | | | | |
| | | | | **For Shade Widths to 66"** | 144" | 144" | 144" | 144" | 144" |
| | | | | **For Shade Widths to 72"** | 138" | NA | NA | 138" | 138" |
| | | | | **For Shade Widths to 78"** | 126" | NA | NA | 126" | 126" |
| | | | | **Railroaded** | | | | | |
| | | | | **Maximum Width** | **108"** | **108¨** | **108"** | **108"** | **108"** |
| | | | | | **Maximum Height** | | | | |
| | | | | **For Shade Widths to 108"** | 66" | 66" | 66" | 66" | 66" |
| **World Textures 1** | **78"** | **YES** | **YES** | **Non-Railroaded** | | | | | |
| | | | | **Maximum Width** | **78"** | **66"** | **66"** | **78"** | **78"** |
| | | | | | **Maximum Height** | | | | |
| | | | | **For Shade Widths to 66"** | 144" | 144" | 144" | 126" | 144" |
| | | | | **For Shade Widths to 72"** | 138" | NA | NA | 126" | 138" |
| | | | | **For Shade Widths to 78"** | 126" | NA | NA | 126" | 126" |
| | | | | **Railroaded** | | | | | |
| | | | | **Maximum Width** | **102"** | **102"** | **102"** | **102"** | **102"** |
| | | | | | **Maximum Height** | | | | |
| | | | | **For Shade Widths to 66"** | 144" | 144" | 144" | 126" | 144" |
| | | | | **For Shade Widths to 72"** | 138" | 138" | 138" | 126" | 138" |
| | | | | **For Shade Widths to 78"** | 126" | 126" | 126" | 126" | 126" |
| | | | | **For Shade Widths to 84"** | 120" | 120" | 120" | 108" | 120" |
| | | | | **For Shade Widths to 90"** | 108" | 108" | 108" | 108" | 108" |
| | | | | **For Shade Widths to 96"** | 102" | 102" | 102" | 102" | 102" |
| | | | | **For Shade Widths to 102"** | 84" | 84" | 84" | 84" | 84" |
| **World Textures 1 Blackout** | **78"** | **YES** | **YES** | **Non-Railroaded** | | | | | |
| | | | | **Maximum Width** | **78"** | **66"** | **66"** | **78"** | **78"** |
| | | | | | **Maximum Height** | | | | |
| | | | | **For Shade Widths to 66"** | 144" | 138" | 138" | 108" | 144" |
| | | | | **For Shade Widths to 72"** | 138" | NA | NA | 108" | 138" |
| | | | | **For Shade Widths to 78"** | 126" | NA | NA | 108" | 126" |
| | | | | **Railroaded** | | | | | |
| | | | | **Maximum Width** | **102"** | **102"** | **102"** | **102"** | **102"** |
| | | | | | **Maximum Height** | | | | |
| | | | | **For Shade Widths to 66"** | 144" | 144" | 144" | 108" | 144" |
| | | | | **For Shade Widths to 72"** | 138" | 138" | 138" | 108" | 138" |
| | | | | **For Shade Widths to 78"** | 126" | 126" | 126" | 108" | 126" |
| | | | | **For Shade Widths to 84"** | 120" | 120" | 120" | 108" | 120" |
| | | | | **For Shade Widths to 90"** | 108" | 108" | 108" | 108" | 108" |
| | | | | **For Shade Widths to 96"** | 102" | 102" | 102" | 102" | 102" |
| | | | | **For Shade Widths to 102"** | 84" | 84" | 84" | 84" | 84" |

# PRODUCT SIZE SPECIFICATIONS – POWERWAND™

**Minimum and Maximum Standards**
Please Note: Shade sizes that are wider than the fabric roll width indicated will be made with the fabric turned width for length (railroaded). The maximum width for non-railroaded shades is the roll width unless otherwise noted.

| Minimum: | Width | Height |
|---|---|---|
| PowerWand | 19" | 12" |

Fabrics turned width for length will have a visible seam when fabricated longer than their maximum roll width less 10". Fabrics turned width for length may have an edge curl. This is not considered a defect in the product.

| Material Name | Roll Width | Railroad Option | Splice/ Seam | | PowerWand™ Shade Without Top Treament | PowerWand™ Shade with Deluxe | PowerWand™ Shade with Fabric | PowerWand™ Shade with Medium | PowerWand™ Shade with Large |
|---|---|---|---|---|---|---|---|---|---|
| World Textures 2 | 80" | YES | YES | Non-Railroaded | | | | | |
| | | | | Maximum Width | 80" | 70" | 70" | 80" | 80" |
| | | | | | Maximum Height | | | | |
| | | | | For Shade Widths to 70" | 138" | 138" | 138" | 84" | 138" |
| | | | | For Shade Widths to 72" | 138" | NA | NA | 84" | 138" |
| | | | | For Shade Widths to 80" | 120" | NA | NA | 84" | 120" |
| | | | | Railroaded | | | | | |
| | | | | Maximum Width | 102" | 102" | 102" | 102" | 102" |
| | | | | | Maximum Height | | | | |
| | | | | For Shade Widths to 66" | 144" | 138" | 138" | 84" | 138" |
| | | | | For Shade Widths to 72" | 138" | 138" | 138" | 84" | 138" |
| | | | | For Shade Widths to 84" | 120" | 120" | 120" | 84" | 120" |
| | | | | For Shade Widths to 90" | 108" | 108" | 108" | 84" | 108" |
| | | | | For Shade Widths to 96" | 102" | 102" | 102" | 84" | 102" |
| | | | | For Shade Widths to 102" | 84" | 84" | 84" | 84" | 84" |
| World Textures 2 Blackout | 80" | YES | YES | Non-Railroaded | | | | | |
| | | | | Maximum Width | 80" | 70" | 70" | 80" | 80" |
| | | | | | Maximum Height | | | | |
| | | | | For Shade Widths to 66" | 144" | 144" | 144" | 144" | 144" |
| | | | | For Shade Widths to 70" | 138" | 138" | 138" | 138" | 138" |
| | | | | For Shade Widths to 72" | 138" | NA | NA | 138" | 138" |
| | | | | For Shade Widths to 80" | 120" | NA | NA | 120" | 120" |
| | | | | Railroaded | | | | | |
| | | | | Maximum Width | 102" | 102" | 102" | 102" | 102" |
| | | | | | Maximum Height | | | | |
| | | | | For Shade Widths to 66" | 144" | 144" | 144" | 144" | 144" |
| | | | | For Shade Widths to 72" | 138" | 138" | 138" | 138" | 138" |
| | | | | For Shade Widths to 84" | 120" | 120" | 120" | 120" | 120" |
| | | | | For Shade Widths to 90" | 108" | 108" | 108" | 108" | 108" |
| | | | | For Shade Widths to 96" | 102" | 102" | 102" | 102" | 102" |
| | | | | For Shade Widths to 102" | 84" | 84" | 84" | 84" | 84" |

# PRODUCT SIZE SPECIFICATIONS – SIMPLICITY

**Minimum and Maximum Standards**

Please Note: Shade sizes that are wider than the fabric roll width indicated will be made with the fabric turned width for length (railroaded). The maximum width for non-railroaded shades is the roll width unless otherwise noted.

| Minimum: | Width | Height |
|---|---|---|
| Simplicity | 19" | 12" |

Fabrics turned width for length will have a visible seam when fabricated longer than their maximum roll width less 10". Fabrics turned width for length may have an edge curl. This is not considered a defect in the product.

| Material Name | Roll Width | Railroad Option | Splice/ Seam | | Simplicity Motorized Shade Without Top Treament | Simplicity Motorized Shade with Deluxe Valance | Simplicity Motorized Shade with Fabric Valance | Simplicity Motorized Shade with Medium Cassette | Simplicity Motorized Shade with Large Cassette |
|---|---|---|---|---|---|---|---|---|---|
| 1% E Screen | 122" | YES | YES | Non-Railroaded | | | | | |
| | | | | Maximum Width | 108" | 108" | 108" | 108" | 108" |
| | | | | | Maximum Height | | | | |
| | | | | For Shade Widths to 84" | 144" | 144" | 144" | 138" | 144" |
| | | | | For Shade Widths to 90" | 138" | 138" | 138" | 138" | 138" |
| | | | | For Shade Widths to 96" | 108" | 108" | 108" | 108" | 108" |
| | | | | For Shade Widths to 102" | 84" | 84" | 84" | 84" | 84" |
| | | | | For Shade Widths over 102" | 66" | 66" | 66" | 66" | 66" |
| | | | | Railroaded | | | | | |
| | | | | Maximum Width | 108" | 108" | 108" | 108" | 108" |
| | | | | | Maximum Height | | | | |
| | | | | For Shade Widths to 84" | 144" | 144" | 144" | 138" | 144" |
| | | | | For Shade Widths to 90" | 138" | 138" | 138" | 138" | 138" |
| | | | | For Shade Widths to 96" | 108" | 108" | 108" | 108" | 108" |
| | | | | For Shade Widths to 102" | 84" | 84" | 84" | 84" | 84" |
| | | | | For Shade Widths over 102" | 66" | 66" | 66" | 66" | 66" |
| 1% Sheerweave 2500 | 126" | YES | YES | Non-Railroaded | | | | | |
| | | | | Maximum Width | 102" | 102" | 102" | 102" | 102" |
| | | | | | Maximum Height | | | | |
| | | | | Max Height: Width to 78" | 144" | 144" | 144" | 114" | 144" |
| | | | | Max Height: Width to 84" | 126" | 126" | 126" | 114" | 126" |
| | | | | Max Height: Width to 90" | 96" | 96" | 96" | 96" | 96" |
| | | | | Max Height: Width to 96" | 78" | 78" | 78" | 78" | 78" |
| | | | | For Shade Widths over 96" | 60" | 60" | 60" | 60" | 60" |
| | | | | Railroaded | | | | | |
| | | | | Maximum Width | 102" | 102" | 102" | 102" | 102" |
| | | | | | Maximum Height | | | | |
| | | | | Max Height: Width to 78" | 144" | 144" | 144" | 114" | 144" |
| | | | | Max Height: Width to 84" | 126" | 126" | 126" | 114" | 126" |
| | | | | Max Height: Width to 90" | 96" | 96" | 96" | 96" | 96" |
| | | | | Max Height: Width to 96" | 78" | 78" | 78" | 78" | 78" |
| | | | | For Shade Widths over 96" | 60" | 60" | 60" | 60" | 60" |
| 1% Sheerweave 2701 | 126" | YES | YES | Non-Railroaded | | | | | |
| | | | | Maximum Width | 102" | 102" | 102" | 102" | 102" |
| | | | | | Maximum Height | | | | |
| | | | | Max Height: Width to 72" | 144" | 144" | 144" | 138" | 144" |
| | | | | Max Height: Width to 84" | 126" | 126" | 126" | 126" | 126" |
| | | | | Max Height: Width to 90" | 96" | 96" | 96" | 96" | 96" |
| | | | | Max Height: Width to 96" | 78" | 78" | 78" | 78" | 78" |
| | | | | For Shade Widths over 96" | 60" | 60" | 60" | 60" | 60" |
| | | | | Railroaded | | | | | |
| | | | | Maximum Width | 102" | 102" | 102" | 102" | 102" |
| | | | | | Maximum Height | | | | |
| | | | | Max Height: Width to 72" | 144" | 144" | 144" | 138" | 144" |
| | | | | Max Height: Width to 84" | 126" | 126" | 126" | 126" | 126" |
| | | | | Max Height: Width to 90" | 96" | 96" | 96" | 96" | 96" |
| | | | | Max Height: Width to 96" | 78" | 78" | 78" | 78" | 78" |
| | | | | For Shade Widths over 96" | 60" | 60" | 60" | 60" | 60" |
| 1% Sheerweave 4901 | 98" | NO | NO | Non-Railroaded | | | | | |
| | | | | Maximum Width | 96" | 88" | 88" | 96" | 96" |
| | | | | | Maximum Height | | | | |
| | | | | For Shade Widths to 54" | 144" | 144" | 144" | 96" | 144" |
| | | | | For Shade Widths to 60" | 144" | 144" | 144" | 96" | 144" |
| | | | | For Shade Widths to 66" | 144" | 144" | 144" | 96" | 144" |
| | | | | For Shade Widths to 72" | 144" | 144" | 144" | 96" | 144" |
| | | | | For Shade Widths to 78" | 144" | 144" | 144" | 96" | 144" |
| | | | | For Shade Widths to 84" | 126" | 126" | 126" | 96" | 126" |
| | | | | For Shade Widths to 88" | 96" | 96" | 96" | 96" | 96" |
| | | | | For Shade Widths to 90" | 96" | N/A | N/A | 96" | 96" |
| | | | | For Shade Widths to 96" | 78" | N/A | N/A | 78" | 78" |
| 1% Sheerweave 5000 | 98" | NO | NO | Non-Railroaded | | | | | |
| | | | | Maximum Width | 96" | 86" | 86" | 96" | 96" |
| | | | | | Maximum Height | | | | |
| | | | | For Shade Widths to 78" | 144" | 84" | 84" | 54" | 84" |
| | | | | For Shade Widths to 84" | 126" | 84" | 84" | 54" | 84" |
| | | | | For Shade Widths to 86" | 96" | 84" | 84" | 54" | 84" |
| | | | | For Shade Widths to 90" | 96" | N/A | N/A | 54" | 84" |
| | | | | For Shade Widths to 96" | 78" | N/A | N/A | 54" | 78" |

# PRODUCT SIZE SPECIFICATIONS – SIMPLICITY

**Minimum and Maximum Standards**
Please Note: Shade sizes that are wider than the fabric roll width indicated will be made with the fabric turned width for length (railroaded). The maximum width for non-railroaded shades is the roll width unless otherwise noted.

| Minimum: | Width | Height |
|---|---|---|
| Simplicity | 19" | 12" |

Fabrics turned width for length will have a visible seam when fabricated longer than their maximum roll width less 10". Fabrics turned width for length may have an edge curl. This is not considered a defect in the product.

| Material Name | Roll Width | Railroad Option | Splice/ Seam | | Simplicity Motorized Shade Without Top Treament | Simplicity Motorized Shade with Deluxe Valance | Simplicity Motorized Shade with Fabric Valance | Simplicity Motorized Shade with Medium Cassette | Simplicity Motorized Shade with Large Cassette |
|---|---|---|---|---|---|---|---|---|---|
| 1% Toka | 118" | YES | YES | Non-Railroaded | | | | | |
| | | | | Maximum Width | 102" | 102" | 102" | 102" | 102" |
| | | | | | Maximum Height | | | | |
| | | | | Max Height: Width to 72" | 144" | 144" | 144" | 96" | 144" |
| | | | | Max Height: Width to 84" | 126" | 126" | 126" | 96" | 126" |
| | | | | Max Height: Width to 90" | 96" | 96" | 96" | 96" | 96" |
| | | | | Max Height: Width to 96" | 78" | 78" | 78" | 78" | 78" |
| | | | | For Shade Widths over 96" | 60" | 60" | 60" | 60" | 60" |
| | | | | Railroaded | | | | | |
| | | | | Maximum Width | 102" | 102" | 102" | 102" | 102" |
| | | | | | Maximum Height | | | | |
| | | | | Max Height: Width to 72" | 144" | 144" | 144" | 96" | 144" |
| | | | | Max Height: Width to 84" | 126" | 126" | 126" | 96" | 126" |
| | | | | Max Height: Width to 90" | 96" | 96" | 96" | 96" | 96" |
| | | | | Max Height: Width to 96" | 78" | 78" | 78" | 78" | 78" |
| | | | | For Shade Widths over 96" | 60" | 60" | 60" | 60" | 60" |
| 3% E Screen | 122" | YES | YES | Non-Railroaded | | | | | |
| | | | | 108" | 108" | 108" | 108" | 108" | 108" |
| | | | | | Maximum Height | | | | |
| | | | | For Shade Widths to 84" | 144" | 144" | 144" | 144" | 144" |
| | | | | For Shade Widths to 90" | 138" | 138" | 138" | 138" | 138" |
| | | | | For Shade Widths to 96" | 108" | 108" | 108" | 108" | 108" |
| | | | | For Shade Widths to 102" | 84" | 84" | 84" | 84" | 84" |
| | | | | For Shade Widths over 102" | 66" | 66" | 66" | 66" | 66" |
| | | | | Railroaded | | | | | |
| | | | | Maximum Width | 108" | 108" | 108" | 108" | 108" |
| | | | | | Maximum Height | | | | |
| | | | | For Shade Widths to 84" | 144" | 144" | 144" | 144" | 144" |
| | | | | For Shade Widths to 90" | 138" | 138" | 138" | 138" | 138" |
| | | | | For Shade Widths to 96" | 108" | 108" | 108" | 108" | 108" |
| | | | | For Shade Widths to 102" | 84" | 84" | 84" | 84" | 84" |
| | | | | For Shade Widths over 102" | 66" | 66" | 66" | 66" | 66" |
| 3% M Screen | 122" | YES | YES | Non-Railroaded | | | | | |
| | | | | Maximum Width | 108" | 108" | 108" | 108" | 108" |
| | | | | | Maximum Height | | | | |
| | | | | For Shade Widths to 84" | 144" | 144" | 144" | 126" | 144" |
| | | | | For Shade Widths to 90" | 138" | 138" | 138" | 126" | 138" |
| | | | | For Shade Widths to 96" | 108" | 108" | 108" | 108" | 108" |
| | | | | For Shade Widths over 96" | 66" | 66" | 66" | 66" | 66" |
| | | | | Railroaded | | | | | |
| | | | | Maximum Width | 108" | 108" | 108" | 108" | 108" |
| | | | | | Maximum Height | | | | |
| | | | | For Shade Widths to 84" | 144" | 144" | 144" | 126" | 144" |
| | | | | For Shade Widths to 90" | 138" | 138" | 138" | 126" | 138" |
| | | | | For Shade Widths to 96" | 108" | 108" | 108" | 108" | 108" |
| | | | | For Shade Widths over 96" | 66" | 66" | 66" | 66" | 66" |

# PRODUCT SIZE SPECIFICATIONS – SIMPLICITY

**Minimum and Maximum Standards**

Please Note: Shade sizes that are wider than the fabric roll width indicated will be made with the fabric turned width for length (railroaded). The maximum width for non-railroaded shades is the roll width unless otherwise noted.

| Minimum: | Width | Height |
|---|---|---|
| Simplicity | 19" | 12" |

Fabrics turned width for length will have a visible seam when fabricated longer than their maximum roll width less 10". Fabrics turned width for length may have an edge curl. This is not considered a defect in the product.

| Material Name | Roll Width | Railroad Option | Splice/ Seam | | Simplicity Motorized Shade Without Top Treament | Simplicity Motorized Shade with Deluxe Valance | Simplicity Motorized Shade with Fabric Valance | Simplicity Motorized Shade with Medium Cassette | Simplicity Motorized Shade with Large Cassette |
|---|---|---|---|---|---|---|---|---|---|
| 3% Sheerweave 2410 | 126" | YES | YES | **Non-Railroaded** | | | | | |
| | | | | **Maximum Width** | 102" | 102" | 102" | 102" | 102" |
| | | | | | Maximum Height | | | | |
| | | | | For Shade Widths to 72" | 144" | 144" | 144" | 138" | 144" |
| | | | | For Shade Widths to 84" | 126" | 126" | 126" | 126" | 126" |
| | | | | For Shade Widths to 90" | 96" | 96" | 96" | 96" | 96" |
| | | | | For Shade Widths to 96" | 78" | 78" | 78" | 78" | 78" |
| | | | | For Shade Widths over 96" | 60" | 60" | 60" | 60" | 60" |
| | | | | **Railroaded** | | | | | |
| | | | | **Maximum Width** | 102" | 102" | 102" | 102" | 102" |
| | | | | | Maximum Height | | | | |
| | | | | For Shade Widths to 72" | 144" | 144" | 144" | 138" | 144" |
| | | | | For Shade Widths to 84" | 126" | 126" | 126" | 126" | 126" |
| | | | | For Shade Widths to 90" | 96" | 96" | 96" | 96" | 96" |
| | | | | For Shade Widths to 96" | 78" | 78" | 78" | 78" | 78" |
| | | | | For Shade Widths over 96" | 60" | 60" | 60" | 60" | 60" |
| 3% Sheerweave 2703 | 126" | YES | YES | **Non-Railroaded** | | | | | |
| | | | | **Maximum Width** | 96" | 96" | 96" | 96" | 96" |
| | | | | | Maximum Height | | | | |
| | | | | For Shade Widths to 54" | 144" | 144" | 144" | 96" | 144" |
| | | | | For Shade Widths to 60" | 144" | 144" | 144" | 96" | 144" |
| | | | | For Shade Widths to 66" | 144" | 144" | 144" | 96" | 144" |
| | | | | For Shade Widths to 72" | 144" | 144" | 144" | 96" | 144" |
| | | | | For Shade Widths to 78" | 144" | 144" | 144" | 96" | 144" |
| | | | | For Shade Widths to 84" | 126" | 126" | 126" | 96" | 126" |
| | | | | For Shade Widths to 90" | 96" | 96" | 96" | 96" | 96" |
| | | | | For Shade Widths to 96" | 78" | 78" | 78" | 78" | 78" |
| | | | | **Railroaded** | | | | | |
| | | | | **Maximum Width** | 96" | 96" | 96" | 96" | 96" |
| | | | | | Maximum Height | | | | |
| | | | | For Shade Widths to 54" | 144" | 144" | 144" | 96" | 144" |
| | | | | For Shade Widths to 60" | 144" | 144" | 144" | 96" | 144" |
| | | | | For Shade Widths to 66" | 144" | 144" | 144" | 96" | 144" |
| | | | | For Shade Widths to 72" | 144" | 144" | 144" | 96" | 144" |
| | | | | For Shade Widths to 78" | 144" | 144" | 144" | 96" | 144" |
| | | | | For Shade Widths to 84" | 126" | 126" | 126" | 96" | 126" |
| | | | | For Shade Widths to 90" | 96" | 96" | 96" | 96" | 96" |
| | | | | For Shade Widths to 96" | 78" | 78" | 78" | 78" | 78" |
| 3% Sheerweave 4400 | 126" | YES | YES | **Non-Railroaded** | | | | | |
| | | | | **Maximum Width** | 102" | 102" | 102" | 102" | 102" |
| | | | | | Maximum Height | | | | |
| | | | | For Shade Widths to 78" | 144" | 120" | 120" | 78" | 120" |
| | | | | For Shade Widths to 84" | 126" | 120" | 120" | 78" | 120" |
| | | | | For Shade Widths to 90" | 96" | 96" | 96" | 78" | 96" |
| | | | | For Shade Widths to 96" | 78" | 78" | 78" | 78" | 78" |
| | | | | For Shade Widths over 96" | 60" | 60" | 60" | 60" | 60" |
| | | | | **Railroaded** | | | | | |
| | | | | **Maximum Width** | 102" | 102" | 102" | 102" | 102" |
| | | | | | Maximum Height | | | | |
| | | | | For Shade Widths to 78" | 144" | 120" | 120" | 78" | 120" |
| | | | | For Shade Widths to 84" | 126" | 120" | 120" | 78" | 120" |
| | | | | For Shade Widths to 90" | 96" | 96" | 96" | 78" | 96" |
| | | | | For Shade Widths to 96" | 78" | 78" | 78" | 78" | 78" |
| | | | | For Shade Widths over 96" | 60" | 60" | 60" | 60" | 60" |
| 3% Sheerweave 4600 | 126" | YES | YES | **Non-Railroaded** | | | | | |
| | | | | **Maximum Width** | 96" | 96" | 96" | 96" | 96" |
| | | | | | Maximum Height | | | | |
| | | | | For Shade Widths to 54" | 120" | 120" | 120" | 84" | 120" |
| | | | | For Shade Widths to 60" | 120" | 120" | 120" | 84" | 120" |
| | | | | For Shade Widths to 66" | 120" | 120" | 120" | 84" | 120" |
| | | | | For Shade Widths to 72" | 120" | 120" | 120" | 84" | 120" |
| | | | | For Shade Widths to 78" | 120" | 120" | 120" | 84" | 120" |
| | | | | For Shade Widths to 84" | 120" | 120" | 120" | 84" | 120" |
| | | | | For Shade Widths to 90" | 96" | 96" | 96" | 84" | 96" |
| | | | | For Shade Widths to 96" | 78" | 78" | 78" | 78" | 78" |
| | | | | **Railroaded** | | | | | |
| | | | | **Maximum Width** | 96" | 96" | 96" | 96" | 96" |
| | | | | | Maximum Height | | | | |
| | | | | For Shade Widths to 54" | 120" | 120" | 120" | 84" | 120" |
| | | | | For Shade Widths to 60" | 120" | 120" | 120" | 84" | 120" |
| | | | | For Shade Widths to 66" | 120" | 120" | 120" | 84" | 120" |
| | | | | For Shade Widths to 72" | 120" | 120" | 120" | 84" | 120" |
| | | | | For Shade Widths to 78" | 120" | 120" | 120" | 84" | 120" |
| | | | | For Shade Widths to 84" | 120" | 120" | 120" | 84" | 120" |
| | | | | For Shade Widths to 90" | 96" | 96" | 96" | 84" | 96" |
| | | | | For Shade Widths to 96" | 78" | 78" | 78" | 78" | 78" |

# PRODUCT SIZE SPECIFICATIONS – SIMPLICITY

**Minimum and Maximum Standards**
Please Note: Shade sizes that are wider than the fabric roll width indicated will be made with the fabric turned width for length (railroaded). The maximum width for non-railroaded shades is the roll width unless otherwise noted.

| Minimum: | Width | Height |
|---|---|---|
| Simplicity | 19" | 12" |

Fabrics turned width for length will have a visible seam when fabricated longer than their maximum roll width less 10". Fabrics turned width for length may have an edge curl. This is not considered a defect in the product.

| Material Name | Roll Width | Railroad Option | Splice/ Seam | | Simplicity Motorized Shade Without Top Treament | Simplicity Motorized Shade with Deluxe Valance | Simplicity Motorized Shade with Fabric Valance | Simplicity Motorized Shade with Medium Cassette | Simplicity Motorized Shade with Large Cassette |
|---|---|---|---|---|---|---|---|---|---|
| 3% Sheerweave 4903 | 98" | NO | NO | Non-Railroaded | | | | | |
| | | | | Maximum Width | 96" | 88" | 88" | 96" | 96" |
| | | | | | Maximum Height | | | | |
| | | | | For Shade Widths to 54" | 144" | 144" | 144" | 90" | 144" |
| | | | | For Shade Widths to 60" | 144" | 144" | 144" | 90" | 144" |
| | | | | For Shade Widths to 66" | 144" | 144" | 144" | 90" | 144" |
| | | | | For Shade Widths to 72" | 144" | 144" | 144" | 90" | 144" |
| | | | | For Shade Widths to 78" | 144" | 144" | 144" | 90" | 144" |
| | | | | For Shade Widths to 84" | 126" | 126" | 126" | 90" | 126" |
| | | | | For Shade Widths to 88" | 96" | 96" | 96" | 90" | 96" |
| | | | | For Shade Widths to 90" | 96" | N/A | N/A | 90" | 96" |
| | | | | For Shade Widths to 96" | 78" | N/A | N/A | 78" | 78" |
| 3% Sheerweave 5000 *(R07_02, 04, 05, 07, 10)* | 98" | NO | NO | Non-Railroaded | | | | | |
| | | | | Maximum Width | 98" | 86" | 86" | 98" | 98" |
| | | | | | Maximum Height | | | | |
| | | | | For Shade Widths to 78" | 144" | 72" | 72" | 42" | 72" |
| | | | | For Shade Widths to 84" | 126" | 72" | 72" | 42" | 72" |
| | | | | For Shade Widths to 86" | 96" | 72" | 72" | 42" | 72" |
| | | | | For Shade Widths to 90" | 96" | N/A | N/A | 42" | 72" |
| | | | | For Shade Widths over 90" | 60" | N/A | N/A | 42" | 60" |
| 3% Sheerweave 5000 *(R07_R11, R89, R90, R93, U10, U11)* | 98" | NO | NO | Non-Railroaded | | | | | |
| | | | | Maximum Width | 96" | 88" | 88" | 96" | 96" |
| | | | | | Maximum Height | | | | |
| | | | | For Shade Widths to 54" | 144" | 78" | 78" | 48" | 78" |
| | | | | For Shade Widths to 60" | 144" | 78" | 78" | 48" | 78" |
| | | | | For Shade Widths to 66" | 144" | 78" | 78" | 48" | 78" |
| | | | | For Shade Widths to 72" | 144" | 78" | 78" | 48" | 78" |
| | | | | For Shade Widths to 78" | 144" | 78" | 78" | 48" | 78" |
| | | | | For Shade Widths to 84" | 126" | 78" | 78" | 48" | 78" |
| | | | | For Shade Widths to 88" | 96" | 78" | 78" | 48" | 78" |
| | | | | For Shade Widths to 90" | 96" | NA | NA | 48" | 78" |
| | | | | For Shade Widths to 96" | 78" | NA | NA | 48" | 78" |
| 3% T Screen | 98" | YES | NO | Non-Railroaded | | | | | |
| | | | | Maximum Width | 98" | 90" | 90" | 98" | 98" |
| | | | | | Maximum Height | | | | |
| | | | | For Shade Widths to 84" | 144" | 144" | 144" | 108" | 144" |
| | | | | For Shade Widths to 90" | 138" | 138" | 138" | 108" | 138" |
| | | | | For Shade Widths to 96" | 108" | N/A | N/A | 108" | 108" |
| | | | | For Shade Widths over 96" | 84" | N/A | N/A | 84" | 84" |
| | | | | Railroaded | | | | | |
| | | | | Maximum Width | 108" | 108" | 108" | 108" | 108" |
| | | | | | Maximum Height | | | | |
| | | | | For Shade Widths to 96" | 86" | 86" | 86" | 86" | 86" |
| | | | | For Shade Widths over 96" | 66" | 66" | 66" | 66" | 66" |
| 4% S Screen | 122" | NO | NO | Non-Railroaded | | | | | |
| | | | | Maximum Width | 102" | 102" | 102" | 102" | 102" |
| | | | | | Maximum Height | | | | |
| | | | | For Shade Widths to 72" | 144" | 120" | 120" | 72" | 120" |
| | | | | For Shade Widths to 84" | 126" | 120" | 120" | 72" | 120" |
| | | | | For Shade Widths to 90" | 96" | 96" | 96" | 72" | 96" |
| | | | | For Shade Widths to 96" | 78" | 78" | 78" | 72" | 78" |
| | | | | For Shade Widths over 96" | 60" | 60" | 60" | 60" | 60" |
| 4% Silver Screen | 94" | YES | YES | Non-Railroaded | | | | | |
| | | | | Maximum Width | 94" | 84" | 84" | 94" | 94" |
| | | | | | Maximum Height | | | | |
| | | | | For Shade Widths to 84" | 144" | 144" | 144" | 144" | 144" |
| | | | | For Shade Widths to 90" | 138" | N/A | N/A | 138" | 138" |
| | | | | For Shade Widths over 90" | 108" | N/A | N/A | 108" | 108" |
| | | | | Railroaded | | | | | |
| | | | | Maximum Width | 108" | 108" | 108" | 108" | 108" |
| | | | | | Maximum Height | | | | |
| | | | | For Shade Widths to 96" | 108" | 108" | 108" | 108" | 108" |
| | | | | For Shade Widths to 102" | 84" | 84" | 84" | 84" | 84" |
| | | | | For Shade Widths over 102" | 66" | 66" | 66" | 66" | 66" |

# PRODUCT SIZE SPECIFICATIONS – SIMPLICITY

**Minimum and Maximum Standards**
Please Note: Shade sizes that are wider than the fabric roll width indicated will be made with the fabric turned width for length (railroaded). The maximum width for non-railroaded shades is the roll width unless otherwise noted.

| Minimum: | Width | Height |
|---|---|---|
| Simplicity | 19" | 12" |

Fabrics turned width for length will have a visible seam when fabricated longer than their maximum roll width less 10". Fabrics turned width for length may have an edge curl. This is not considered a defect in the product.

| Material Name | Roll Width | Railroad Option | Splice/ Seam | | Simplicity Motorized Shade Without Top Treament | Simplicity Motorized Shade with Deluxe Valance | Simplicity Motorized Shade with Fabric Valance | Simplicity Motorized Shade with Medium Cassette | Simplicity Motorized Shade with Large Cassette |
|---|---|---|---|---|---|---|---|---|---|
| 5% E Screen | 122" | YES | YES | Non-Railroaded | | | | | |
| | | | | Maximum Width | 102" | 102" | 102" | 102" | 102" |
| | | | | | Maximum Height | | | | |
| | | | | For Shade Widths to 84" | 144" | 144" | 144" | 144" | 144" |
| | | | | For Shade Widths to 90" | 138" | 138" | 138" | 138" | 138" |
| | | | | For Shade Widths to 96" | 108" | 108" | 108" | 108" | 108" |
| | | | | For Shade Widths to 102" | 84" | 84" | 84" | 84" | 84" |
| | | | | Railroaded | | | | | |
| | | | | Maximum Width | 102" | 102" | 102" | 102" | 102" |
| | | | | | Maximum Height | | | | |
| | | | | For Shade Widths to 84" | 144" | 144" | 144" | 144" | 144" |
| | | | | For Shade Widths to 90" | 138" | 138" | 138" | 138" | 138" |
| | | | | For Shade Widths to 96" | 108" | 108" | 108" | 108" | 108" |
| | | | | For Shade Widths to 102" | 84" | 84" | 84" | 84" | 84" |
| 5% M Screen Deco | 98" | YES | YES | Non-Railroaded | | | | | |
| | | | | Maximum Width | 98" | 90" | 90" | 98" | 98" |
| | | | | | Maximum Height | | | | |
| | | | | For Shade Widths to 84" | 144" | 144" | 144" | 126" | 144" |
| | | | | For Shade Widths to 90" | 138" | 138" | 138" | 126" | 138" |
| | | | | For Shade Widths to 96" | 108" | N/A | N/A | 108" | 108" |
| | | | | For Shade Widths to 98" | 84" | N/A | N/A | 84" | 84" |
| | | | | Railroaded | | | | | |
| | | | | Maximum Width | 102" | 102" | 102" | 102" | 102" |
| | | | | | Maximum Height | | | | |
| | | | | For Shade Widths to 84" | 144" | 144" | 144" | 126" | 144" |
| | | | | For Shade Widths to 90" | 138" | 138" | 138" | 126" | 138" |
| | | | | For Shade Widths to 96" | 108" | 108" | 108" | 108" | 108" |
| | | | | For Shade Widths to 102" | 84" | 84" | 84" | 84" | 84" |
| 5% Sheerweave 2000 | 126" | NO | NO | Non-Railroaded | | | | | |
| | | | | Maximum Width | 96" | 96" | 96" | 96" | 96" |
| | | | | | Maximum Height | | | | |
| | | | | For Shade Widths to 54" | 144" | 144" | 144" | 132" | 144" |
| | | | | For Shade Widths to 60" | 144" | 144" | 144" | 126" | 144" |
| | | | | For Shade Widths to 66" | 144" | 144" | 144" | 126" | 144" |
| | | | | For Shade Widths to 72" | 144" | 144" | 144" | 126" | 144" |
| | | | | For Shade Widths to 78" | 144" | 144" | 144" | 126" | 144" |
| | | | | For Shade Widths to 84" | 126" | 126" | 126" | 126" | 126" |
| | | | | For Shade Widths to 90" | 96" | 96" | 96" | 96" | 96" |
| | | | | For Shade Widths to 96" | 78" | 78" | 78" | 78" | 78" |
| | | | | Railroaded | | | | | |
| | | | | Maximum Width | 96" | 96" | 96" | 96" | 96" |
| | | | | | Maximum Height | | | | |
| | | | | For Shade Widths to 54" | 120" | 120" | 120" | 120" | 120" |
| | | | | For Shade Widths to 60" | 120" | 120" | 120" | 120" | 120" |
| | | | | For Shade Widths to 66" | 120" | 120" | 120" | 120" | 120" |
| | | | | For Shade Widths to 72" | 120" | 120" | 120" | 120" | 120" |
| | | | | For Shade Widths to 78" | 120" | 120" | 120" | 120" | 120" |
| | | | | For Shade Widths to 84" | 120" | 120" | 120" | 120" | 120" |
| | | | | For Shade Widths to 90" | 96" | 96" | 96" | 96" | 96" |
| | | | | For Shade Widths to 96" | 78" | 78" | 78" | 78" | 78" |
| 5% Sheerweave 2705 | 126" | NO | NO | Non-Railroaded | | | | | |
| | | | | Maximum Width | 98" | 98" | N/A | 98" | 98" |
| | | | | | Maximum Height | | | | |
| | | | | For Shade Widths to 66" | 120" | 120" | N/A | 102" | 120" |
| | | | | For Shade Widths to 72" | 120" | 120" | N/A | 102" | 120" |
| | | | | For Shade Widths to 78" | 120" | 120" | N/A | 102" | 120" |
| | | | | For Shade Widths to 84" | 120" | 120" | N/A | 102" | 120" |
| | | | | For Shade Widths to 90" | 120" | 120" | N/A | 102" | 120" |
| | | | | For Shade Widths to 96" | 108" | 108" | N/A | 102" | 108" |
| | | | | For Shade Widths over 96" | 84" | 84" | NA | 84" | 84" |

# PRODUCT SIZE SPECIFICATIONS – SIMPLICITY

**Minimum and Maximum Standards**
Please Note: Shade sizes that are wider than the fabric roll width indicated will be made with the fabric turned width for length (railroaded). The maximum width for non-railroaded shades is the roll width unless otherwise noted.

| Minimum: | Width | Height |
|---|---|---|
| Simplicity | 19" | 12" |

Fabrics turned width for length will have a visible seam when fabricated longer than their maximum roll width less 10". Fabrics turned width for length may have an edge curl. This is not considered a defect in the product.

| Material Name | Roll Width | Railroad Option | Splice/ Seam | | Simplicity Motorized Shade Without Top Treament | Simplicity Motorized Shade with Deluxe Valance | Simplicity Motorized Shade with Fabric Valance | Simplicity Motorized Shade with Medium Cassette | Simplicity Motorized Shade with Large Cassette |
|---|---|---|---|---|---|---|---|---|---|
| 5% Sheerweave 2390 | 126" | YES | YES | Non-Railroaded | | | | | |
| | | | | Maximum Width | 102" | 102" | 102" | 102" | 102" |
| | | | | | Maximum Height | | | | |
| | | | | For Shade Widths to 84" | 144" | 144" | 144" | 144" | 144" |
| | | | | For Shade Widths to 90" | 138" | 138" | 138" | 138" | 138" |
| | | | | For Shade Widths to 96" | 108" | 108" | 108" | 108" | 108" |
| | | | | For Shade Widths to 102" | 84" | 84" | 84" | 84" | 84" |
| | | | | Railroaded | | | | | |
| | | | | Maximum Width | 102" | 102" | 102" | 102" | 102" |
| | | | | | Maximum Height | | | | |
| | | | | For Shade Widths to 84" | 144" | 144" | 144" | 144" | 144" |
| | | | | For Shade Widths to 90" | 138" | 138" | 138" | 138" | 138" |
| | | | | For Shade Widths to 96" | 108" | 108" | 108" | 108" | 108" |
| | | | | For Shade Widths to 102" | 84" | 84" | 84" | 84" | 84" |
| 5% Sheerweave 4000 | 126" | YES | YES | Non-Railroaded | | | | | |
| | | | | Maximum Width | 102" | 102" | 102" | 102" | 102" |
| | | | | | Maximum Height | | | | |
| | | | | For Shade Widths to 78" | 144" | 138" | 138" | 90" | 138" |
| | | | | For Shade Widths to 84" | 126" | 126" | 126" | 90" | 126" |
| | | | | For Shade Widths to 90" | 96" | 96" | 96" | 90" | 96" |
| | | | | For Shade Widths to 96" | 78" | 78" | 78" | 90" | 78" |
| | | | | For Shade Widths over 96" | 60" | 60" | 60" | 60" | 60" |
| | | | | Railroaded | | | | | |
| | | | | Maximum Width | 102" | 102" | 102" | 102" | 102" |
| | | | | | Maximum Height | | | | |
| | | | | For Shade Widths to 78" | 144" | 138" | 138" | 90" | 138" |
| | | | | For Shade Widths to 84" | 126" | 126" | 126" | 90" | 126" |
| | | | | For Shade Widths to 90" | 96" | 96" | 96" | 90" | 96" |
| | | | | For Shade Widths to 96" | 78" | 78" | 78" | 90" | 78" |
| | | | | For Shade Widths over 96" | 60" | 60" | 60" | 60" | 60" |
| 5% Sheerweave 4500 | 126" | NO | NO | Non-Railroaded | | | | | |
| | | | | Maximum Width | 96" | 96" | 96" | 96" | 96" |
| | | | | | Maximum Height | | | | |
| | | | | For Shade Widths to 54" | 144" | 144" | 144" | 108" | 144" |
| | | | | For Shade Widths to 60" | 144" | 144" | 144" | 108" | 144" |
| | | | | For Shade Widths to 66" | 144" | 144" | 144" | 108" | 144" |
| | | | | For Shade Widths to 72" | 144" | 144" | 144" | 108" | 144" |
| | | | | For Shade Widths to 78" | 144" | 144" | 144" | 108" | 144" |
| | | | | For Shade Widths to 84" | 126" | 126" | 126" | 108" | 126" |
| | | | | For Shade Widths to 90" | 96" | 96" | 96" | 96" | 96" |
| | | | | For Shade Widths to 96" | 78" | 78" | 78" | 72" | 78" |
| | | | | Railroaded | | | | | |
| | | | | Maximum Width | 96" | 96" | 96" | 96" | 96" |
| | | | | | Maximum Height | | | | |
| | | | | For Shade Widths to 54" | 144" | 144" | 144" | 108" | 144" |
| | | | | For Shade Widths to 60" | 144" | 144" | 144" | 108" | 144" |
| | | | | For Shade Widths to 66" | 144" | 144" | 144" | 108" | 144" |
| | | | | For Shade Widths to 72" | 144" | 144" | 144" | 108" | 144" |
| | | | | For Shade Widths to 78" | 144" | 144" | 144" | 108" | 144" |
| | | | | For Shade Widths to 84" | 126" | 126" | 126" | 108" | 126" |
| | | | | For Shade Widths to 90" | 96" | 96" | 96" | 96" | 96" |
| | | | | For Shade Widths to 96" | 78" | 78" | 78" | 72" | 78" |

# PRODUCT SIZE SPECIFICATIONS – SIMPLICITY

**Minimum and Maximum Standards**
Please Note: Shade sizes that are wider than the fabric roll width indicated will be made with the fabric turned width for length (railroaded). The maximum width for non-railroaded shades is the roll width unless otherwise noted.

| Minimum: | Width | Height |
|---|---|---|
| Simplicity | 19" | 12" |

Fabrics turned width for length will have a visible seam when fabricated longer than their maximum roll width less 10". Fabrics turned width for length may have an edge curl. This is not considered a defect in the product.

| Material Name | Roll Width | Railroad Option | Splice/ Seam | | Simplicity Motorized Shade Without Top Treament | Simplicity Motorized Shade with Deluxe Valance | Simplicity Motorized Shade with Fabric Valance | Simplicity Motorized Shade with Medium Cassette | Simplicity Motorized Shade with Large Cassette |
|---|---|---|---|---|---|---|---|---|---|
| **5% Sheerweave 5000** *(R10_01, 03, 06, 07, 09, 10, 11, 12, 13,14, 15, 16, 17, 18, 19, 20, 21)* | **98"** | **NO** | **NO** | **Non-Railroaded** | | | | | |
| | | | | **Maximum Width** | **98"** | **86"** | **86"** | **98"** | **98"** |
| | | | | | **Maximum Height** | | | | |
| | | | | **For Shade Widths to 72"** | 144" | 90" | 90" | 54" | 90" |
| | | | | **For Shade Widths to 84"** | 126" | 90" | 90" | 54" | 90" |
| | | | | **For Shade Widths to 86"** | 96" | 90" | 90" | 54" | 90" |
| | | | | **For Shade Widths to 90"** | 96" | N/A | N/A | 54" | 90" |
| | | | | **For Shade Widths over 90"** | 60" | N/A | N/A | 54" | 66" |
| **5% Sheerweave 5000** *(R10_Q51, S77, S84)* | **98"** | **NO** | **NO** | **Non-Railroaded** | | | | | |
| | | | | **Maximum Width** | **96"** | **88"** | **88"** | **96"** | **96"** |
| | | | | | **Maximum Height** | | | | |
| | | | | **For Shade Widths to 54"** | 144" | 90" | 90" | 54" | 90" |
| | | | | **For Shade Widths to 60"** | 144" | 90" | 90" | 54" | 90" |
| | | | | **For Shade Widths to 66"** | 144" | 90" | 90" | 54" | 90" |
| | | | | **For Shade Widths to 72"** | 144" | 90" | 90" | 54" | 90" |
| | | | | **For Shade Widths to 78"** | 144" | 90" | 90" | 54" | 90" |
| | | | | **For Shade Widths to 84"** | 126" | 90" | 90" | 54" | 90" |
| | | | | **For Shade Widths to 88"** | 96" | 90" | 90" | 54" | 90" |
| | | | | **For Shade Widths to 90"** | 96" | NA | NA | 54" | 90" |
| | | | | **For Shade Widths to 96"** | 78" | NA | NA | 54" | 78" |
| **5% Sheerweave 5000** *(R10_Q43, S82)* | **98"** | **NO** | **NO** | **Non-Railroaded** | | | | | |
| | | | | **Maximum Width** | **96"** | **88"** | **88"** | **96"** | **96"** |
| | | | | | **Maximum Height** | | | | |
| | | | | **For Shade Widths to 54"** | 144" | 102" | 102" | 66" | 102" |
| | | | | **For Shade Widths to 60"** | 144" | 102" | 102" | 66" | 102" |
| | | | | **For Shade Widths to 66"** | 144" | 102" | 102" | 66" | 102" |
| | | | | **For Shade Widths to 72"** | 144" | 102" | 102" | 66" | 102" |
| | | | | **For Shade Widths to 78"** | 144" | 102" | 102" | 66" | 102" |
| | | | | **For Shade Widths to 84"** | 126" | 102" | 102" | 66" | 102" |
| | | | | **For Shade Widths to 88"** | 96" | 96" | 96" | 66" | 96" |
| | | | | **For Shade Widths to 90"** | 96" | NA | NA | 66" | 96" |
| | | | | **For Shade Widths to 96"** | 78" | NA | NA | 66" | 78" |
| **7% Global Screen** | **118"** | **YES** | **YES** | **Non-Railroaded** | | | | | |
| | | | | **Maximum Width** | **108"** | **108"** | **108"** | **108"** | **108"** |
| | | | | | **Maximum Height** | | | | |
| | | | | **For Shade Widths to 84"** | 144" | 144" | 144" | 120" | 144" |
| | | | | **For Shade Widths to 90"** | 138" | 138" | 138" | 120" | 138" |
| | | | | **For Shade Widths to 96"** | 108" | 108" | 108" | 108" | 108" |
| | | | | **For Shade Widths to 102"** | 84" | 84" | 84" | 84" | 84" |
| | | | | **For Shade Widths to 108"** | 66" | 66" | 66" | 66" | 66" |
| | | | | **Railroaded** | | | | | |
| | | | | **Maximum Width** | **108"** | **108"** | **108"** | **108"** | **108"** |
| | | | | | **Maximum Height** | | | | |
| | | | | **For Shade Widths to 84"** | 144" | 144" | 144" | 120" | 144" |
| | | | | **For Shade Widths to 90"** | 138" | 138" | 138" | 120" | 138" |
| | | | | **For Shade Widths to 96"** | 108" | 108" | 108" | 108" | 108" |
| | | | | **For Shade Widths to 102"** | 84" | 84" | 84" | 84" | 84" |
| | | | | **For Shade Widths to 108"** | 66" | 66" | 66" | 66" | 66" |
| **7% Sheerweave 5000** *(R34_Q46)* | **98"** | **NO** | **NO** | **Non-Railroaded** | | | | | |
| | | | | **Maximum Width** | **98"** | **86"** | **86"** | **98"** | **98"** |
| | | | | | **Maximum Height** | | | | |
| | | | | **For Shade Widths to 72"** | 144" | 102" | 102" | 66" | 102" |
| | | | | **For Shade Widths to 84"** | 126" | 102" | 102" | 66" | 102" |
| | | | | **For Shade Widths to 86"** | 96" | 96" | 96" | 66" | 96" |
| | | | | **For Shade Widths to 90"** | 96" | N/A | N/A | 66" | 96" |
| | | | | **For Shade Widths over 90"** | 60" | N/A | N/A | 60" | 60" |
| **7% Sheerweave 5000** *(R34_08, 09)* | **98"** | **NO** | **NO** | **Non-Railroaded** | | | | | |
| | | | | **Maximum Width** | **98"** | **88"** | **88"** | **98"** | **98"** |
| | | | | | **Maximum Height** | | | | |
| | | | | **For Shade Widths to 72"** | 144" | 114" | 114" | 72" | 114" |
| | | | | **For Shade Widths to 84"** | 126" | 114" | 114" | 72" | 114" |
| | | | | **For Shade Widths to 88"** | 96" | 96" | 96" | 72" | 96" |
| | | | | **For Shade Widths to 90"** | 96" | N/A | N/A | 72" | 96" |
| | | | | **For Shade Widths over 90"** | 60" | N/A | N/A | 60" | 60" |
| **7% Sheerweave 5000** *(R34_S73)* | **98"** | **NO** | **NO** | **Non-Railroaded** | | | | | |
| | | | | **Maximum Width** | **96"** | **88"** | **88"** | **96"** | **96"** |
| | | | | | **Maximum Height** | | | | |
| | | | | **For Shade Widths to 54"** | 144" | 96" | 96" | 60" | 96" |
| | | | | **For Shade Widths to 60"** | 144" | 96" | 96" | 60" | 96" |
| | | | | **For Shade Widths to 66"** | 144" | 96" | 96" | 60" | 96" |
| | | | | **For Shade Widths to 72"** | 144" | 96" | 96" | 60" | 96" |
| | | | | **For Shade Widths to 78"** | 144" | 96" | 96" | 60" | 96" |
| | | | | **For Shade Widths to 84"** | 126" | 96" | 96" | 60" | 96" |
| | | | | **For Shade Widths to 88"** | 96" | 96" | 96" | 60" | 96" |
| | | | | **For Shade Widths to 90"** | 96" | NA | NA | 60" | 96" |
| | | | | **For Shade Widths to 96"** | 78" | NA | NA | 60" | 78" |

# PRODUCT SIZE SPECIFICATIONS – SIMPLICITY

**Minimum and Maximum Standards**
Please Note: Shade sizes that are wider than the fabric roll width indicated will be made with the fabric turned width for length (railroaded). The maximum width for non-railroaded shades is the roll width unless otherwise noted.

| Minimum: | Width | Height |
|---|---|---|
| Simplicity | 19" | 12" |

Fabrics turned width for length will have a visible seam when fabricated longer than their maximum roll width less 10". Fabrics turned width for length may have an edge curl. This is not considered a defect in the product.

| Material Name | Roll Width | Railroad Option | Splice/ Seam | | Simplicity Motorized Shade Without Top Treament | Simplicity Motorized Shade with Deluxe Valance | Simplicity Motorized Shade with Fabric Valance | Simplicity Motorized Shade with Medium Cassette | Simplicity Motorized Shade with Large Cassette |
|---|---|---|---|---|---|---|---|---|---|
| 10% E Screen | 122" | YES | YES | Non-Railroaded | | | | | |
| | | | | Maximum Width | 108" | 108" | 108" | 108" | 108" |
| | | | | | Maximum Height | | | | |
| | | | | For Shade Widths to 84" | 144" | 144" | 144" | 138" | 144" |
| | | | | For Shade Widths to 90" | 138" | 138" | 138" | 138" | 138" |
| | | | | For Shade Widths to 96" | 108" | 108" | 108" | 108" | 108" |
| | | | | For Shade Widths to 102" | 84" | 84" | 84" | 84" | 84" |
| | | | | For Shade Widths over 102" | 66" | 66" | 66" | 66" | 66" |
| | | | | Railroaded | | | | | |
| | | | | Maximum Width | 108" | 108" | 108" | 108" | 108" |
| | | | | | Maximum Height | | | | |
| | | | | For Shade Widths to 84" | 144" | 144" | 144" | 138" | 144" |
| | | | | For Shade Widths to 90" | 138" | 138" | 138" | 138" | 138" |
| | | | | For Shade Widths to 96" | 108" | 108" | 108" | 108" | 108" |
| | | | | For Shade Widths to 102" | 84" | 84" | 84" | 84" | 84" |
| | | | | For Shade Widths over 102" | 66" | 66" | 66" | 66" | 66" |
| 10% Sheerweave 2360 | 126" | NO | NO | Non-Railroaded | | | | | |
| | | | | Maximum Width | 102" | 102" | 102" | 102" | 102" |
| | | | | | Maximum Height | | | | |
| | | | | For Shade Widths to 66" | 144" | 144" | 144" | 138" | 144" |
| | | | | For Shade Widths to 72" | 144" | 144" | 144" | 138" | 144" |
| | | | | For Shade Widths to 78" | 144" | 144" | 144" | 138" | 144" |
| | | | | For Shade Widths to 84" | 144" | 144" | 144" | 138" | 144" |
| | | | | For Shade Widths to 90" | 138" | 138" | 138" | 138" | 138" |
| | | | | For Shade Widths to 96" | 108" | 108" | 108" | 102" | 108" |
| | | | | For Shade Widths to 102" | 84" | 84" | 84" | 84" | 84" |
| 10% Sheerweave 4100 | 98" | YES | YES | Non-Railroaded | | | | | |
| | | | | Maximum Width | 96" | 88" | 88" | 96" | 96" |
| | | | | | Maximum Height | | | | |
| | | | | For Shade Widths to 54" | 144" | 120" | 120" | 78" | 120" |
| | | | | For Shade Widths to 60" | 144" | 120" | 120" | 78" | 120" |
| | | | | For Shade Widths to 66" | 144" | 120" | 120" | 78" | 120" |
| | | | | For Shade Widths to 72" | 144" | 120" | 120" | 78" | 120" |
| | | | | For Shade Widths to 78" | 144" | 120" | 120" | 78" | 120" |
| | | | | For Shade Widths to 84" | 126" | 120" | 120" | 78" | 120" |
| | | | | For Shade Widths to 88" | 96" | 96" | 96" | 78" | 96" |
| | | | | For Shade Widths to 90" | 96" | N/A | N/A | 78" | 96" |
| | | | | For Shade Widths to 96" | 78" | N/A | N/A | 78" | 78" |
| | | | | Railroaded | | | | | |
| | | | | Maximum Width | 96" | 96" | 96" | 96" | 96" |
| | | | | | Maximum Height | | | | |
| | | | | For Shade Widths to 54" | 120" | 120" | 120" | 78" | 120" |
| | | | | For Shade Widths to 60" | 120" | 120" | 120" | 78" | 120" |
| | | | | For Shade Widths to 66" | 120" | 120" | 120" | 78" | 120" |
| | | | | For Shade Widths to 72" | 120" | 120" | 120" | 78" | 120" |
| | | | | For Shade Widths to 78" | 120" | 120" | 120" | 78" | 120" |
| | | | | For Shade Widths to 84" | 120" | 120" | 120" | 78" | 120" |
| | | | | For Shade Widths to 90" | 96" | 96" | 96" | 78" | 96" |
| | | | | For Shade Widths to 96" | 78" | 78" | 78" | 78" | 78" |
| 10% Sheerweave 5000 *(R26_03)* | 98" | NO | NO | Non-Railroaded | | | | | |
| | | | | Maximum Width | 98" | 88" | 88" | 98" | 98" |
| | | | | | Maximum Height | | | | |
| | | | | For Shade Widths to 72" | 144" | 90" | 90" | 54" | 90" |
| | | | | For Shade Widths to 84" | 126" | 90" | 90" | 54" | 90" |
| | | | | For Shade Widths to 88" | 96" | 90" | 90" | 54" | 90" |
| | | | | For Shade Widths to 90" | 96" | N/A | N/A | 54" | 90" |
| | | | | For Shade Widths over 90" | 60" | N/A | N/A | 54" | 60" |
| 10% Sheerweave 5000 *(R26_U16, U24, U28, U29)* | 98" | NO | NO | Non-Railroaded | | | | | |
| | | | | Maximum Width | 96" | 88" | 88" | 96" | 96" |
| | | | | | Maximum Height | | | | |
| | | | | For Shade Widths to 54" | 144" | 102" | 102" | 66" | 102" |
| | | | | For Shade Widths to 60" | 144" | 102" | 102" | 66" | 102" |
| | | | | For Shade Widths to 66" | 144" | 102" | 102" | 66" | 102" |
| | | | | For Shade Widths to 72" | 144" | 102" | 102" | 66" | 102" |
| | | | | For Shade Widths to 78" | 144" | 102" | 102" | 66" | 102" |
| | | | | For Shade Widths to 84" | 126" | 102" | 102" | 66" | 102" |
| | | | | For Shade Widths to 88" | 96" | 96" | 96" | 66" | 96" |
| | | | | For Shade Widths to 90" | 96" | NA | NA | 66" | 96" |
| | | | | For Shade Widths to 96" | 78" | NA | NA | 66" | 78" |

# PRODUCT SIZE SPECIFICATIONS – SIMPLICITY

**Minimum and Maximum Standards**
Please Note: Shade sizes that are wider than the fabric roll width indicated will be made with the fabric turned width for length (railroaded). The maximum width for non-railroaded shades is the roll width unless otherwise noted.

| Minimum: | Width | Height |
|---|---|---|
| Simplicity | 19" | 12" |

Fabrics turned width for length will have a visible seam when fabricated longer than their maximum roll width less 10". Fabrics turned width for length may have an edge curl. This is not considered a defect in the product.

| Material Name | Roll Width | Railroad Option | Splice/ Seam | | Simplicity Motorized Shade Without Top Treament | Simplicity Motorized Shade with Deluxe Valance | Simplicity Motorized Shade with Fabric Valance | Simplicity Motorized Shade with Medium Cassette | Simplicity Motorized Shade with Large Cassette |
|---|---|---|---|---|---|---|---|---|---|
| Alexandria | 78" | NO | NO | Non-Railroaded | | | | | |
| | | | | Maximum Width | 78" | 68" | 68" | 78" | 78" |
| | | | | | Maximum Height | | | | |
| | | | | For Shade Widths to 68" | 144" | 144" | 144" | 144" | 144" |
| | | | | For Shade Widths to 72" | 144" | N/A | N/A | 144" | 144" |
| | | | | For Shade Widths to 78" | 144" | N/A | N/A | 144" | 144" |
| Astaire | 94" | NO | NO | Non-Railroaded | | | | | |
| | | | | Maximum Width | 94" | N/A | N/A | 94" | 94" |
| | | | | | Maximum Height | | | | |
| | | | | For Shade Widths to 94" | 144" | N/A | N/A | 78" | 120" |
| Avila R Blackout | 118" | YES | YES | Non-Railroaded | | | | | |
| | | | | Maximum Width | 108" | 108" | 108" | 108" | 108" |
| | | | | | Maximum Height | | | | |
| | | | | For Shade Widths to 84" | 144" | 144" | 144" | 144" | 144" |
| | | | | For Shade Widths to 90" | 138" | 138" | 138" | 138" | 138" |
| | | | | For Shade Widths to 96" | 108" | 108" | 108" | 108" | 108" |
| | | | | For Shade Widths over 96" | 66" | 66" | 66" | 66" | 66" |
| | | | | Railroaded | | | | | |
| | | | | Maximum Width | 108" | 108" | 108" | 108" | 108" |
| | | | | | Maximum Height | | | | |
| | | | | For Shade Widths to 84" | 144" | 144" | 144" | 144" | 144" |
| | | | | For Shade Widths to 90" | 138" | 138" | 138" | 138" | 138" |
| | | | | For Shade Widths to 96" | 108" | 108" | 108" | 108" | 108" |
| | | | | For Shade Widths over 96" | 66" | 66" | 66" | 66" | 66" |
| Baroque | 78" | NO | NO | Non-Railroaded | | | | | |
| | | | | Maximum Width | 78" | 68" | 68" | 78" | 78" |
| | | | | | Maximum Height | | | | |
| | | | | For Shade Widths to 68" | 144" | 144" | 144" | 144" | 144" |
| | | | | For Shade Widths to 78" | 144" | N/A | N/A | 144" | 144" |
| Blackout - Solid | 72" | YES | YES | Non-Railroaded | | | | | |
| | | | | Maximum Width | 72" | 62" | N/A | 72" | 72" |
| | | | | | Maximum Height | | | | |
| | | | | For Shade Widths to 62" | 144" | 144" | N/A | 144" | 144" |
| | | | | For Shade Widths to 72" | 144" | N/A | N/A | 144" | 144" |
| | | | | Railroaded | | | | | |
| | | | | Maximum Width | 108" | 108" | N/A | 108" | 108" |
| | | | | | Maximum Height | | | | |
| | | | | For Shade Widths to 90" | 130" | 130" | N/A | 130" | 130" |
| | | | | For Shade Widths to 96" | 108" | 108" | N/A | 108" | 108" |
| | | | | For Shade Widths to 102" | 84" | 84" | N/A | 84" | 84" |
| | | | | For Shade Widths over 102" | 66" | 66" | N/A | 66" | 66" |
| Brilliance | 118" | NO | NO | Non-Railroaded | | | | | |
| | | | | Maximum Width | 118" | 108" | 108" | 118" | 118" |
| | | | | | Maximum Height | | | | |
| | | | | For Shade Widths to 96" | 144" | 144" | 144" | 144" | 144" |
| | | | | For Shade Widths over 96" | 60" | 60" | 60" | 60" | 60" |
| Brilliance Blackout | 118" | NO | NO | Non-Railroaded | | | | | |
| | | | | Maximum Width | 108" | 108" | 108" | 108" | 108" |
| | | | | | Maximum Height | | | | |
| | | | | For Shade Widths to 84" | 144" | 144" | 144" | 114" | 144" |
| | | | | For Shade Widths to 90" | 138" | 138" | 138" | 114" | 138" |
| | | | | For Shade Widths to 96" | 108" | 108" | 108" | 108" | 108" |
| | | | | For Shade Widths over 96" | 66" | 66" | 66" | 66" | 66" |

# PRODUCT SIZE SPECIFICATIONS – SIMPLICITY

**Minimum and Maximum Standards**
Please Note: Shade sizes that are wider than the fabric roll width indicated will be made with the fabric turned width for length (railroaded). The maximum width for non-railroaded shades is the roll width unless otherwise noted.

| Minimum: | Width | Height |
|---|---|---|
| Simplicity | 19" | 12" |

Fabrics turned width for length will have a visible seam when fabricated longer than their maximum roll width less 10". Fabrics turned width for length may have an edge curl. This is not considered a defect in the product.

| Material Name | Roll Width | Railroad Option | Splice/ Seam | | Simplicity Motorized Shade Without Top Treament | Simplicity Motorized Shade with Deluxe Valance | Simplicity Motorized Shade with Fabric Valance | Simplicity Motorized Shade with Medium Cassette | Simplicity Motorized Shade with Large Cassette |
|---|---|---|---|---|---|---|---|---|---|
| Carrara | 110" | NO | NO | Non-Railroaded | | | | | |
| | | | | Maximum Width | 110" | 100" | 100" | 110" | 110" |
| | | | | | Maximum Height | | | | |
| | | | | For Shade Widths to 66" | 144" | 144" | 144" | 144" | 144" |
| | | | | For Shade Widths to 78" | 144" | 144" | 144" | 144" | 144" |
| | | | | For Shade Widths to 90" | 138" | 138" | 138" | 138" | 138" |
| | | | | For Shade Widths to 100" | 84" | 84" | 84" | 84" | 84" |
| | | | | For Shade Widths to 102" | 84" | NA | NA | 84" | 84" |
| | | | | For Shade Widths to 108" | 66" | NA | NA | 66" | 66" |
| | | | | For Shade Widths to 110" | 48" | NA | NA | 48" | 48" |
| Carrara Blackout | 110" | NO | NO | Non-Railroaded | | | | | |
| | | | | Maximum Width | 102" | 102" | 102" | 102" | 102" |
| | | | | | Maximum Height | | | | |
| | | | | For Shade Widths to 72" | 144" | 144" | 144" | 96" | 144" |
| | | | | For Shade Widths to 84" | 126" | 126" | 126" | 96" | 126" |
| | | | | For Shade Widths to 90" | 96" | 108" | 108" | 96" | 96" |
| | | | | For Shade Widths to 96" | 78" | 90" | 90" | 78" | 78" |
| | | | | For Shade Widths over 96" | 60" | 66" | 66" | 60" | 60" |
| Claudio | 110" | NO | NO | Non-Railroaded | | | | | |
| | | | | Maximum Width | 110" | 100" | 100" | 110" | 110" |
| | | | | | Maximum Height | | | | |
| | | | | Max Height: Width to 100" | 144" | 144" | 144" | 144" | 144" |
| | | | | Max Height: Width to 102" | 144" | N/A | N/A | 144" | 144" |
| | | | | For Shade Widths over 102" | 84" | N/A | N/A | 84" | 84" |
| Claudio Blackout | 110" | NO | NO | Non-Railroaded | | | | | |
| | | | | Maximum Width | 108" | 100" | 100" | 108" | 108" |
| | | | | | Maximum Height | | | | |
| | | | | For Shade Widths to 84" | 144" | 144" | 144" | 114" | 144" |
| | | | | For Shade Widths to 90" | 138" | 138" | 138" | 114" | 138" |
| | | | | For Shade Widths to 96" | 108" | 108" | 108" | 108" | 108" |
| | | | | For Shade Widths over 96" | 66" | 66" | 66" | 66" | 66" |
| Cusco | 110" | YES | YES | Non-Railroaded | | | | | |
| | | | | Maximum Width | 102" | 102" | 102" | 102" | 102" |
| | | | | | Maximum Height | | | | |
| | | | | For Shade Widths to 84" | 144" | 144" | 144" | 132" | 144" |
| | | | | For Shade Widths to 90" | 138" | 138" | 138" | 132" | 138" |
| | | | | For Shade Widths to 96" | 108" | 108" | 108" | 108" | 108" |
| | | | | For Shade Widths to 102" | 84" | 84" | 84" | 84" | 84" |
| | | | | Railroaded | | | | | |
| | | | | Maximum Width | 102" | 102" | 102" | 102" | 102" |
| | | | | | Maximum Height | | | | |
| | | | | For Shade Widths to 84" | 144" | 144" | 144" | 132" | 144" |
| | | | | For Shade Widths to 90" | 138" | 138" | 138" | 132" | 138" |
| | | | | For Shade Widths to 96" | 108" | 108" | 108" | 108" | 108" |
| | | | | For Shade Widths to 102" | 84" | 84" | 84" | 84" | 84" |
| Darien | 90" | NO | NO | Non-Railroaded | | | | | |
| | | | | Maximum Width | 90" | 80" | 80" | 90" | 90" |
| | | | | | Maximum Height | | | | |
| | | | | Max Height: Width to 80" | 144" | 144" | 144" | 144" | 144" |
| | | | | Max Height: Width to 90" | 144" | N/A | N/A | 144" | 144" |
| Drizzle | 94" | YES | YES | Non-Railroaded | | | | | |
| | | | | Maximum Width | 94" | 84" | 84" | 94" | 94" |
| | | | | | Maximum Height | | | | |
| | | | | For Shade Widths to 68" | 144" | 144" | 144" | 144" | 144" |
| | | | | For Shade Widths to 78" | 144" | 144" | 144" | 144" | 144" |
| | | | | For Shade Widths to 84" | 144" | 144" | 144" | 144" | 144" |
| | | | | For Shade Widths to 90" | 144" | NA | NA | 144" | 144" |
| | | | | For Shade Widths over 90" | 144" | NA | NA | 144" | 144" |
| | | | | Railroaded | | | | | |
| | | | | Maximum Width | 120" | 120" | 120" | 120" | 120" |
| | | | | | Maximum Height | | | | |
| | | | | Max Height: Width to 102" | 144" | 144" | 144" | 144" | 144" |
| | | | | Max Height: Width to 108" | 108" | 108" | 108" | 108" | 108" |
| | | | | Max Height: Width to 114" | 84" | 84" | 84" | 84" | 84" |
| | | | | Max Height: Width to 120" | 60" | 60" | 60" | 60" | 60" |

# PRODUCT SIZE SPECIFICATIONS – SIMPLICITY

**Minimum and Maximum Standards**
Please Note: Shade sizes that are wider than the fabric roll width indicated will be made with the fabric turned width for length (railroaded). The maximum width for non-railroaded shades is the roll width unless otherwise noted.

| Minimum: | Width | Height |
|---|---|---|
| Simplicity | 19" | 12" |

Fabrics turned width for length will have a visible seam when fabricated longer than their maximum roll width less 10". Fabrics turned width for length may have an edge curl. This is not considered a defect in the product.

| Material Name | Roll Width | Railroad Option | Splice/ Seam | | Simplicity Motorized Shade Without Top Treament | Simplicity Motorized Shade with Deluxe Valance | Simplicity Motorized Shade with Fabric Valance | Simplicity Motorized Shade with Medium Cassette | Simplicity Motorized Shade with Large Cassette |
|---|---|---|---|---|---|---|---|---|---|
| Fiona | 78" | NO | NO | Non-Railroaded | | | | | |
| | | | | Maximum Width | 78" | 68" | 68" | 78" | 78" |
| | | | | | Maximum Height | | | | |
| | | | | For Shade Widths to 68" | 144" | 144" | 144" | 144" | 144" |
| | | | | For Shade Widths to 78" | 144" | N/A | N/A | 144" | 144" |
| Flocke Blackout | 94" | YES | YES | Non-Railroaded | | | | | |
| | | | | Maximum Width | 94" | 84" | 84" | 94" | 94" |
| | | | | | Maximum Height | | | | |
| | | | | For Shade Widths to 72" | 144" | 144" | 144" | 126" | 144" |
| | | | | For Shade Widths to 84" | 126" | 126" | 126" | 126" | 126" |
| | | | | For Shade Widths to 90" | 96" | N/A | N/A | 96" | 96" |
| | | | | For Shade Widths over 90" | 78" | N/A | N/A | 78" | 78" |
| | | | | Railroaded | | | | | |
| | | | | Maximum Width | 102" | 102" | 102" | 102" | 102" |
| | | | | | Maximum Height | | | | |
| | | | | For Shade Widths to 72" | 144" | 144" | 144" | 126" | 144" |
| | | | | For Shade Widths to 84" | 126" | 126" | 126" | 126" | 126" |
| | | | | For Shade Widths to 90" | 96" | 96" | 96" | 96" | 96" |
| | | | | For Shade Widths over 90" | 60" | 60" | 60" | 60" | 60" |
| Hayworth | 94" | YES | YES | Non-Railroaded | | | | | |
| | | | | Maximum Width | 94" | 84" | 84" | 94" | 94" |
| | | | | | Maximum Height | | | | |
| | | | | For Shade Widths to 84" | 144" | 144" | 144" | 144" | 144" |
| | | | | For Shade Widths over 90" | 144" | N/A | N/A | 144" | 144" |
| | | | | Railroaded | | | | | |
| | | | | Maximum Width | 120" | 120" | 120" | 120" | 120" |
| | | | | | Maximum Height | | | | |
| | | | | Max Height: Width to 102" | 144" | 144" | 144" | 144" | 144" |
| | | | | Max Height: Width to 108" | 108" | 108" | 108" | 108" | 108" |
| | | | | Max Height: Width to 114" | 84" | 84" | 84" | 84" | 84" |
| | | | | Max Height: Width to 120" | 60" | 60" | 60" | 60" | 60" |
| Illusion | 72" | YES | NO | Non-Railroaded | | | | | |
| | | | | Maximum Width | 72" | 62" | 62" | 72" | 72" |
| | | | | | Maximum Height | | | | |
| | | | | For Shade Widths to 62" | 144" | 144" | 144" | 144" | 144" |
| | | | | For Shade Widths to 72" | 144" | N/A | N/A | 144" | 144" |
| | | | | Railroaded | | | | | |
| | | | | Maximum Width | 120" | 120" | 120" | 120" | 120" |
| | | | | | Maximum Height | | | | |
| | | | | Max Height: Width to 120" | 60" | 60" | 60" | 60" | 60" |
| Jasper | 110" | YES | YES | Non-Railroaded | | | | | |
| | | | | Maximum Width | 108" | 100" | 100" | 108" | 108" |
| | | | | | Maximum Height | | | | |
| | | | | For Shade Widths to 84" | 144" | 144" | 144" | 144" | 144" |
| | | | | For Shade Widths to 90" | 138" | 138" | 138" | 138" | 138" |
| | | | | For Shade Widths to 96" | 108" | 108" | 108" | 108" | 108" |
| | | | | For Shade Widths over 96" | 66" | 66" | 66" | 66" | 66" |
| | | | | Railroaded | | | | | |
| | | | | Maximum Width | 108" | 108" | 108" | 108" | 108" |
| | | | | | Maximum Height | | | | |
| | | | | For Shade Widths to 84" | 144" | 144" | 144" | 144" | 144" |
| | | | | For Shade Widths to 90" | 138" | 138" | 138" | 138" | 138" |
| | | | | For Shade Widths to 96" | 108" | 108" | 108" | 108" | 108" |
| | | | | For Shade Widths over 96" | 66" | 66" | 66" | 66" | 66" |

# PRODUCT SIZE SPECIFICATIONS – SIMPLICITY

**Minimum and Maximum Standards**
Please Note: Shade sizes that are wider than the fabric roll width indicated will be made with the fabric turned width for length (railroaded). The maximum width for non-railroaded shades is the roll width unless otherwise noted.

| Minimum: | Width | Height |
|---|---|---|
| Simplicity | 19" | 12" |

Fabrics turned width for length will have a visible seam when fabricated longer than their maximum roll width less 10". Fabrics turned width for length may have an edge curl. This is not considered a defect in the product.

| Material Name | Roll Width | Railroad Option | Splice/ Seam | | Simplicity Motorized Shade Without Top Treament | Simplicity Motorized Shade with Deluxe Valance | Simplicity Motorized Shade with Fabric Valance | Simplicity Motorized Shade with Medium Cassette | Simplicity Motorized Shade with Large Cassette |
|---|---|---|---|---|---|---|---|---|---|
| Linview | 122" | YES | YES | Non-Railroaded | | | | | |
| | | | | Maximum Width | 108" | 108" | 108" | 108" | 108" |
| | | | | | Maximum Height | | | | |
| | | | | For Shade Widths to 96" | 144" | 144" | 144" | 144" | 144" |
| | | | | For Shade Widths to 102" | 144" | 144" | 144" | 144" | 144" |
| | | | | For Shade Widths to 108" | 108" | 108" | 108" | 108" | 108" |
| | | | | Railroaded | | | | | |
| | | | | Maximum Width | 108" | 108" | 108" | 108" | 108" |
| | | | | | Maximum Height | | | | |
| | | | | For Shade Widths to 96" | 120" | 120" | 120" | 120" | 120" |
| | | | | For Shade Widths to 102" | 120" | 120" | 120" | 120" | 120" |
| | | | | For Shade Widths to 108" | 108" | 108" | 108" | 108" | 108" |
| Linview Blackout | 94" | NO | NO | Non-Railroaded | | | | | |
| | | | | Maximum Width | 94" | 84" | 84" | 94" | 94" |
| | | | | | Maximum Height | | | | |
| | | | | For Shade Widths to 84" | 144" | 144" | 144" | 144" | 144" |
| | | | | For Shade Widths to 90" | 138" | N/A | N/A | 138" | 138" |
| | | | | For Shade Widths over 90" | 108" | N/A | N/A | 108" | 108" |
| Montero | 94" | NO | NO | Non-Railroaded | | | | | |
| | | | | Maximum Width | 94" | 84" | 84" | 94" | 94" |
| | | | | | Maximum Height | | | | |
| | | | | For Shade Widths to 84" | 144" | 144" | 144" | 126" | 144" |
| | | | | For Shade Widths to 90" | 138" | N/A | N/A | 126" | 138" |
| | | | | For Shade Widths over 90" | 108" | N/A | N/A | 108" | 108" |
| Moravia | 96" | NO | NO | Non-Railroaded | | | | | |
| | | | | Maximum Width | 96" | 86" | 86" | 96" | 96" |
| | | | | | Maximum Height | | | | |
| | | | | For Shade Widths to 86" | 144" | 144" | 144" | 138" | 144" |
| | | | | For Shade Widths over 90" | 144" | N/A | N/A | 138" | 144" |
| Santa Cruz | 94" | NO | NO | Non-Railroaded | | | | | |
| | | | | Maximum Width | 94" | 84" | 84" | 94" | 94" |
| | | | | | Maximum Height | | | | |
| | | | | For Shade Widths to 84" | 144" | 144" | 144" | 138" | 144" |
| | | | | For Shade Widths to 90" | 138" | N/A | N/A | 138" | 138" |
| | | | | For Shade Widths over 90" | 108" | N/A | N/A | 108" | 108" |
| Santa Cruz Blackout | 94" | NO | NO | Non-Railroaded | | | | | |
| | | | | Maximum Width | 94" | 84" | 84" | 94" | 94" |
| | | | | | Maximum Height | | | | |
| | | | | For Shade Widths to 72" | 144" | 144" | 144" | 102" | 144" |
| | | | | For Shade Widths to 84" | 126" | 126" | 126" | 102" | 126" |
| | | | | For Shade Widths to 90" | 96" | N/A | N/A | 96" | 96" |
| | | | | For Shade Widths over 90" | 78" | N/A | N/A | 78" | 78" |
| Scala Blackout | 110" | YES | YES | Non-Railroaded | | | | | |
| | | | | Maximum Width | 102" | 100" | N/A | 102" | 102" |
| | | | | | Maximum Height | | | | |
| | | | | For Shade Widths to 84" | 144" | 144" | N/A | 144" | 144" |
| | | | | For Shade Widths to 90" | 138" | 138" | N/A | 138" | 138" |
| | | | | For Shade Widths to 96" | 108" | 108" | N/A | 108" | 108" |
| | | | | For Shade Widths to 100" | 84" | 84" | N/A | 84" | 84" |
| | | | | For Shade Widths to 102" | 84" | N/A | N/A | 84" | 84" |
| | | | | Railroaded | | | | | |
| | | | | Maximum Width | 102" | 100" | N/A | 102" | 102" |
| | | | | | Maximum Height | | | | |
| | | | | For Shade Widths to 84" | 144" | 144" | N/A | 144" | 144" |
| | | | | For Shade Widths to 90" | 138" | 138" | N/A | 138" | 138" |
| | | | | For Shade Widths to 96" | 108" | 108" | N/A | 108" | 108" |
| | | | | For Shade Widths to 100" | 84" | 84" | N/A | 84" | 84" |
| | | | | For Shade Widths to 102" | 84" | N/A | N/A | 84" | 84" |

# PRODUCT SIZE SPECIFICATIONS – SIMPLICITY

**Minimum and Maximum Standards**
Please Note: Shade sizes that are wider than the fabric roll width indicated will be made with the fabric turned width for length (railroaded). The maximum width for non-railroaded shades is the roll width unless otherwise noted.

| Minimum: | Width | Height |
|---|---|---|
| Simplicity | 19" | 12" |

Fabrics turned width for length will have a visible seam when fabricated longer than their maximum roll width less 10". Fabrics turned width for length may have an edge curl. This is not considered a defect in the product.

| Material Name | Roll Width | Railroad Option | Splice/ Seam | | Simplicity Motorized Shade Without Top Treament | Simplicity Motorized Shade with Deluxe Valance | Simplicity Motorized Shade with Fabric Valance | Simplicity Motorized Shade with Medium Cassette | Simplicity Motorized Shade with Large Cassette |
|---|---|---|---|---|---|---|---|---|---|
| Sheerweave 7200R | 118" | NO | NO | Non-Railroaded | | | | | |
| | | | | Maximum Width | 102" | 102" | 102" | 102" | 102" |
| | | | | | Maximum Height | | | | |
| | | | | For Shade Widths to 66" | 144" | 144" | 144" | 114" | 144" |
| | | | | For Shade Widths to 72" | 144" | 144" | 144" | 114" | 144" |
| | | | | For Shade Widths to 78" | 144" | 144" | 144" | 114" | 144" |
| | | | | For Shade Widths to 84" | 144" | 144" | 144" | 114" | 144" |
| | | | | For Shade Widths to 90" | 138" | 138" | 138" | 114 | 138" |
| | | | | For Shade Widths to 96" | 108" | 108" | 108" | 108" | 108" |
| | | | | For Shade Widths to 102" | 84" | 84" | 84" | 84" | 84" |
| Sheerweave 7250R | 118" | NO | NO | Non-Railroaded | | | | | |
| | | | | Maximum Width | 96" | 96" | 96" | 96" | 96" |
| | | | | | Maximum Height | | | | |
| | | | | For Shade Widths to 96" | 120" | 120" | 120" | 120" | 120" |
| Sheerweave 7400 | 118" | NO | NO | Non-Railroaded | | | | | |
| | | | | Maximum Width | 96" | 96" | 96" | 96" | 96" |
| | | | | | Maximum Height | | | | |
| | | | | For Shade Widths to 54" | 144" | 132" | 132" | 84" | 132" |
| | | | | For Shade Widths to 60" | 144" | 132" | 132" | 84" | 132" |
| | | | | For Shade Widths to 66" | 144" | 132" | 132" | 84" | 132" |
| | | | | For Shade Widths to 72" | 144" | 132" | 132" | 84" | 132" |
| | | | | For Shade Widths to 78" | 144" | 132" | 132" | 84" | 132" |
| | | | | For Shade Widths to 84" | 126" | 126" | 126" | 84" | 126" |
| | | | | For Shade Widths to 90" | 96" | 96" | 96" | 84" | 96" |
| | | | | For Shade Widths to 96" | 78" | 78" | 78" | 78" | 78" |
| Sheerweave 7450 | 118" | NO | NO | Non-Railroaded | | | | | |
| | | | | Maximum Width | 108" | 108" | 108" | 108" | 108" |
| | | | | | Maximum Height | | | | |
| | | | | For Shade Widths to 96" | 144" | 144" | 144" | 132" | 144" |
| | | | | For Shade Widths to 102" | 144" | 144" | 144" | 132" | 144" |
| | | | | For Shade Widths to 108" | 108" | 108" | 108" | 108" | 108" |
| Sheerweave 7500 | 118" | NO | NO | Non-Railroaded | | | | | |
| | | | | Maximum Width | 96" | 96" | N/A | 96" | 96" |
| | | | | | Maximum Height | | | | |
| | | | | For Shade Widths to 66" | 120" | 120" | NA | 120" | 120" |
| | | | | For Shade Widths to 72" | 120" | 120" | N/A | 120" | 120" |
| | | | | For Shade Widths to 78" | 120" | 120" | N/A | 120" | 120" |
| | | | | For Shade Widths to 84" | 120" | 120" | N/A | 120" | 120" |
| | | | | For Shade Widths to 90" | 120" | 120" | N/A | 120" | 120" |
| | | | | For Shade Widths to 96" | 108" | 108" | N/A | 108" | 108" |
| Sheerweave 7500R | 118" | NO | NO | Non-Railroaded | | | | | |
| | | | | Maximum Width | 102" | 102" | N/A | 102" | 102" |
| | | | | | Maximum Height | | | | |
| | | | | For Shade Widths to 66" | 144" | 144" | NA | 144" | 144" |
| | | | | For Shade Widths to 72" | 144" | 144" | N/A | 144" | 144" |
| | | | | For Shade Widths to 78" | 144" | 144" | N/A | 144" | 144" |
| | | | | For Shade Widths to 84" | 144" | 144" | N/A | 144" | 144" |
| | | | | For Shade Widths to 90" | 138" | 138" | N/A | 138" | 138" |
| | | | | For Shade Widths to 96" | 108" | 108" | N/A | 108" | 108" |
| | | | | For Shade Widths to 102" | 84" | 84" | N/A | 84" | 84" |
| Sheerweave 7600 | 118" | NO | NO | Non-Railroaded | | | | | |
| | | | | Maximum Width | 102" | 102" | 102" | 102" | 102" |
| | | | | | Maximum Height | | | | |
| | | | | For Shade Widths to 66" | 144" | 144" | 144" | 126" | 144" |
| | | | | For Shade Widths to 72" | 144" | 144" | 144" | 126" | 144" |
| | | | | For Shade Widths to 78" | 144" | 144" | 144" | 126" | 144" |
| | | | | For Shade Widths to 84" | 144" | 144" | 144" | 126" | 144" |
| | | | | For Shade Widths to 90" | 138" | 138" | 138" | 126" | 138" |
| | | | | For Shade Widths to 96" | 108" | 108" | 108" | 108" | 108" |
| | | | | For Shade Widths to 102" | 84" | 84" | 84" | 84" | 84" |
| Sheerweave 7650 | 118" | NO | NO | Non-Railroaded | | | | | |
| | | | | Maximum Width | 108" | 108" | 108" | 108" | 108" |
| | | | | | Maximum Height | | | | |
| | | | | For Shade Widths to 96" | 144" | 144" | 144" | 144" | 144" |
| | | | | For Shade Widths to 102" | 144" | 144" | 144" | 144" | 144" |
| | | | | For Shade Widths to 108" | 108" | 108" | 108" | 108" | 108" |

# PRODUCT SIZE SPECIFICATIONS – SIMPLICITY

**Minimum and Maximum Standards**
Please Note: Shade sizes that are wider than the fabric roll width indicated will be made with the fabric turned width for length (railroaded). The maximum width for non-railroaded shades is the roll width unless otherwise noted.

| Minimum: | Width | Height |
|---|---|---|
| Simplicity | 19" | 12" |

Fabrics turned width for length will have a visible seam when fabricated longer than their maximum roll width less 10". Fabrics turned width for length may have an edge curl. This is not considered a defect in the product.

| Material Name | Roll Width | Railroad Option | Splice/ Seam | | Simplicity Motorized Shade Without Top Treament | Simplicity Motorized Shade with Deluxe Valance | Simplicity Motorized Shade with Fabric Valance | Simplicity Motorized Shade with Medium Cassette | Simplicity Motorized Shade with Large Cassette |
|---|---|---|---|---|---|---|---|---|---|
| **Sheerweave 7700R** | **118"** | **NO** | **NO** | **Non-Railroaded** | | | | | |
| | | | | **Maximum Width** | **96"** | **96"** | **96"** | **96"** | **96"** |
| | | | | | **Maximum Height** | | | | |
| | | | | **For Shade Widths to 54"** | 144" | 144" | 144" | 96" | 144" |
| | | | | **For Shade Widths to 60"** | 144" | 144" | 144" | 96" | 144" |
| | | | | **For Shade Widths to 66"** | 144" | 144" | 144" | 96" | 144" |
| | | | | **For Shade Widths to 72"** | 144" | 144" | 144" | 96" | 144" |
| | | | | **For Shade Widths to 78"** | 144" | 144" | 144" | 96" | 144" |
| | | | | **For Shade Widths to 84"** | 126" | 126" | 126" | 96" | 126" |
| | | | | **For Shade Widths to 90"** | 96" | 96" | 96" | 96" | 96" |
| | | | | **For Shade Widths to 96"** | 78" | 78" | 78" | 78" | 78" |
| **Sheerweave 7750R** | **118"** | **NO** | **NO** | **Non-Railroaded** | | | | | |
| | | | | **Maximum Width** | **98"** | **98"** | **98"** | **98"** | **98"** |
| | | | | | **Maximum Height** | | | | |
| | | | | **For Shade Widths to 66"** | 120" | 120" | 120" | 120" | 120" |
| | | | | **For Shade Widths to 72"** | 120" | 120" | 120" | 120" | 120" |
| | | | | **For Shade Widths to 78"** | 120" | 120" | 120" | 120" | 120" |
| | | | | **For Shade Widths to 84"** | 120" | 120" | 120" | 120" | 120" |
| | | | | **For Shade Widths to 90"** | 120" | 120" | 120" | 120" | 120" |
| | | | | **For Shade Widths to 96"** | 108" | 108" | 108" | 108" | 108" |
| | | | | **For Shade Widths to 98"** | 84" | 84" | 84" | 84" | 84" |
| **Sorrento** | **108"** | **NO** | **NO** | **Non-Railroaded** | | | | | |
| | | | | **Maximum Width** | **108"** | **98"** | **98"** | **108"** | **108"** |
| | | | | | **Maximum Height** | | | | |
| | | | | **For Shade Widths to 96"** | 144" | 144" | 144" | 108" | 144" |
| | | | | **For Shade Widths over 96"** | 108" | 108" | 108" | 108" | 108" |
| **Sunscreen (SW) 7000** | **118"** | **YES** | **YES** | **Non-Railroaded** | | | | | |
| | | | | **Maximum Width** | **102"** | **102"** | **102"** | **102"** | **102"** |
| | | | | | **Maximum Height** | | | | |
| | | | | **For Shade Widths to 72"** | 144" | 144" | 144" | 96" | 144" |
| | | | | **For Shade Widths to 84"** | 126" | 126" | 126" | 96" | 126" |
| | | | | **For Shade Widths to 90"** | 96" | 96" | 96" | 96" | 96" |
| | | | | **For Shade Widths over 96"** | 78" | 78" | 78" | 78" | 78" |
| | | | | **For Shade Widths over 96"** | 60" | 60" | 60" | 60" | 60" |
| | | | | **Railroaded** | | | | | |
| | | | | **Maximum Width** | **102"** | **102"** | **102"** | **102"** | **102"** |
| | | | | | **Maximum Height** | | | | |
| | | | | **For Shade Widths to 72"** | 144" | 144" | 144" | 96" | 144" |
| | | | | **For Shade Widths to 84"** | 126" | 126" | 126" | 96" | 126" |
| | | | | **For Shade Widths to 90"** | 96" | 96" | 96" | 96" | 96" |
| | | | | **For Shade Widths over 96"** | 78" | 78" | 78" | 78" | 78" |
| | | | | **For Shade Widths over 96"** | 60" | 60" | 60" | 60" | 60" |
| **Tundra** | **94"** | **NO** | **NO** | **Non-Railroaded** | | | | | |
| | | | | **Maximum Width** | **94"** | **84"** | **84"** | **94"** | **94"** |
| | | | | | **Maximum Height** | | | | |
| | | | | **For Shade Widths to 84"** | 144" | 144" | 144" | 144" | 144" |
| | | | | **For Shade Widths to 90"** | 144" | N/A | N/A | 144" | 144" |
| | | | | **For Shade Widths to 94"** | 144" | N/A | N/A | 144" | 144" |
| **Tundra Blackout** | **94"** | **NO** | **NO** | **Non-Railroaded** | | | | | |
| | | | | **Maximum Width** | **94"** | **84"** | **84"** | **94"** | **94"** |
| | | | | | **Maximum Height** | | | | |
| | | | | **For Shade Widths to 66"** | 120" | 120" | 120" | 120" | 120" |
| | | | | **For Shade Widths to 72"** | 120" | 120" | 120" | 120" | 120" |
| | | | | **For Shade Widths to 78"** | 120" | 120" | 120" | 120" | 120" |
| | | | | **For Shade Widths to 84"** | 120" | 120" | 120" | 120" | 120" |
| | | | | **For Shade Widths to 90"** | 120" | N/A | N/A | 120" | 120" |
| | | | | **For Shade Widths to 94"** | 108" | N/A | N/A | 108" | 108" |
| **Uptown** *(R79_02)* | **78"** | **YES** | **NO** | **Non-Railroaded** | | | | | |
| | | | | **Maximum Width** | **78"** | **68"** | **68"** | **78"** | **78"** |
| | | | | | **Maximum Height** | | | | |
| | | | | **For Shade Widths to 68"** | 144" | 144" | 144" | 144" | 144" |
| | | | | **For Shade Widths to 78"** | 144" | N/A | N/A | 144" | 144" |
| | | | | **Railroaded** | | | | | |
| | | | | **Maximum Width** | **120"** | **120"** | **120"** | **120"** | **120"** |
| | | | | | **Maximum Height** | | | | |
| | | | | **For Shade Widths to 102"** | 66" | 66" | 66" | 66" | 66" |
| | | | | **For Shade Widths over 102"** | 60" | 60" | 60" | 60" | 60" |

# PRODUCT SIZE SPECIFICATIONS – SIMPLICITY

**Minimum and Maximum Standards**
Please Note: Shade sizes that are wider than the fabric roll width indicated will be made with the fabric turned width for length (railroaded). The maximum width for non-railroaded shades is the roll width unless otherwise noted.

| Minimum: | Width | Height |
|---|---|---|
| Simplicity | 19" | 12" |

Fabrics turned width for length will have a visible seam when fabricated longer than their maximum roll width less 10". Fabrics turned width for length may have an edge curl. This is not considered a defect in the product.

| Material Name | Roll Width | Railroad Option | Splice/ Seam | | Simplicity Motorized Shade Without Top Treament | Simplicity Motorized Shade with Deluxe Valance | Simplicity Motorized Shade with Fabric Valance | Simplicity Motorized Shade with Medium Cassette | Simplicity Motorized Shade with Large Cassette |
|---|---|---|---|---|---|---|---|---|---|
| **Uptown Room Darkening** *(R79_01)* | 78" | YES | NO | **Non-Railroaded** | | | | | |
| | | | | **Maximum Width** | 78" | 68" | 68" | 78" | 78" |
| | | | | | Maximum Height | | | | |
| | | | | For Shade Widths to 68" | 144" | 144" | 144" | 144" | 144" |
| | | | | For Shade Widths to 78" | 144" | N/A | N/A | 144" | 144" |
| | | | | **Railroaded** | | | | | |
| | | | | **Maximum Width** | 108" | 108" | 108" | 108" | 108" |
| | | | | | Maximum Height | | | | |
| | | | | For Shade Widths to 108" | 66" | 66" | 66" | 66" | 66" |
| **World Textures 1** | 78" | YES | YES | **Non-Railroaded** | | | | | |
| | | | | **Maximum Width** | 78" | 68" | 68" | 78" | 78" |
| | | | | | Maximum Height | | | | |
| | | | | For Shade Widths to 68" | 144" | 144" | 144" | 138" | 144" |
| | | | | For Shade Widths to 78" | 144" | N/A | N/A | 138" | 144" |
| | | | | **Railroaded** | | | | | |
| | | | | **Maximum Width** | 108" | 108" | 108" | 108" | 108" |
| | | | | | Maximum Height | | | | |
| | | | | For Shade Widths to 84" | 144" | 144" | 144" | 138" | 144" |
| | | | | For Shade Widths to 90" | 138" | 138" | 138" | 138" | 138" |
| | | | | For Shade Widths to 96" | 108" | 108" | 108" | 108" | 108" |
| | | | | For Shade Widths to 102" | 84" | 84" | 84" | 84" | 84" |
| | | | | For Shade Widths over 102" | 66" | 66" | 66" | 66" | 66" |
| **World Textures 1 Blackout** | 78" | YES | YES | **Non-Railroaded** | | | | | |
| | | | | **Maximum Width** | 78 | 68" | 68" | 78 | 78 |
| | | | | | Maximum Height | | | | |
| | | | | For Shade Widths to 68" | 144" | 144" | 144" | 108" | 144" |
| | | | | For Shade Widths to 78" | 144" | N/A | N/A | 108" | 144" |
| | | | | **Railroaded** | | | | | |
| | | | | **Maximum Width** | 102" | 102" | 102" | 102" | 102" |
| | | | | | Maximum Height | | | | |
| | | | | For Shade Widths to 84" | 144" | 144" | 144" | 108" | 144" |
| | | | | For Shade Widths to 90" | 138" | 138" | 138" | 108" | 138" |
| | | | | For Shade Widths to 96" | 108" | 108" | 108" | 108" | 108" |
| | | | | For Shade Widths to 102" | 84" | 84" | 84" | 84" | 84" |
| **World Textures 2** | 80" | YES | YES | **Non-Railroaded** | | | | | |
| | | | | **Maximum Width** | 80" | 70" | 70" | 80" | 80" |
| | | | | | Maximum Height | | | | |
| | | | | For Shade Widths to 70" | 144" | 138" | 138" | 90" | 138" |
| | | | | For Shade Widths to 80" | 144" | N/A | N/A | 90" | 138" |
| | | | | **Railroaded** | | | | | |
| | | | | **Maximum Width** | 102" | 102" | 102" | 102" | 102" |
| | | | | | Maximum Height | | | | |
| | | | | For Shade Widths to 84" | 144" | 138" | 138" | 90" | 138" |
| | | | | For Shade Widths to 90" | 138" | 138" | 138" | 90" | 138" |
| | | | | For Shade Widths to 96" | 108" | 108" | 108" | 90" | 108" |
| | | | | For Shade Widths to 102" | 84" | 84" | 84" | 84" | 84" |
| **World Textures 2 Blackout** | 80" | YES | YES | **Non-Railroaded** | | | | | |
| | | | | **Maximum Width** | 80" | 70" | 70" | 80" | 80" |
| | | | | | Maximum Height | | | | |
| | | | | For Shade Widths to 70" | 144" | 144" | 144" | 114" | 144" |
| | | | | For Shade Widths to 80" | 144" | N/A | N/A | 114" | 144" |
| | | | | **Railroaded** | | | | | |
| | | | | **Maximum Width** | 102" | 102" | 102" | 102" | 102" |
| | | | | | Maximum Height | | | | |
| | | | | For Shade Widths to 84" | 144" | 144" | 144" | 114" | 144" |
| | | | | For Shade Widths to 90" | 138" | 138" | 138" | 114" | 138" |
| | | | | For Shade Widths to 96" | 108" | 108" | 108" | 108" | 108" |
| | | | | For Shade Widths to 102" | 84" | 84" | 84" | 84" | 84" |

# PRODUCT SIZE SPECIFICATIONS – REMOTELIFT™ ROLLUP 28 WIREFREE

**Minimum and Maximum Standards**

Please Note: Shade sizes that are wider than the fabric roll width indicated will be made with the fabric turned width for length (railroaded). The maximum width for non-railroaded shades is the roll width unless otherwise noted.

| Minimum: | Width | Height |
|---|---|---|
| R28WF | 17" | 12" |

Fabrics turned width for length will have a visible seam when fabricated longer than their maximum roll width less 10". Fabrics turned width for length may have an edge curl. This is not considered a defect in the product.

| Material Name | Roll Width | Railroad Option | Splice /Seam | | RemoteLift Shade without Top Treatment | RemoteLift with Deluxe Valance | RemoteLift with Fabric Valance | RemoteLift with Medium Cassette | RemoteLift with Large Cassette | RemoteLift with 3" Fascia | RemoteLift with 4" Fascia and Pocket Headrail |
|---|---|---|---|---|---|---|---|---|---|---|---|
| 1% E Screen | 122" | YES | YES | Non-Railroaded | | | | | | | |
| | | | | Maximum Width | 102" | 102" | 102" | 102" | 102" | 102" | 102" |
| | | | | | Maximum Height | | | | | | |
| | | | | For Shade Widths to 66" | 144" | 144" | 144" | 138" | 144" | 144" | 138" |
| | | | | For Shade Widths to 72" | 138" | 138" | 138" | 138" | 138" | 138" | 138" |
| | | | | For Shade Widths to 84" | 120" | 120" | 120" | 120" | 120" | 120" | 120" |
| | | | | For Shade Widths to 90" | 108" | 108" | 108" | 108" | 108" | 102" | 108" |
| | | | | For Shade Widths to 96" | 102" | 102" | 102" | 102" | 102" | 102" | 102" |
| | | | | For Shade Widths to 102" | 84" | 84" | 84" | 84" | 84" | 84" | 84" |
| | | | | Railroaded | | | | | | | |
| | | | | Maximum Width | 102" | 102" | 102" | 102" | 102" | 102" | 102" |
| | | | | | Maximum Height | | | | | | |
| | | | | For Shade Widths to 66" | 144" | 144" | 144" | 138" | 144" | 144" | 138" |
| | | | | For Shade Widths to 72" | 138" | 138" | 138" | 138" | 138" | 138" | 138" |
| | | | | For Shade Widths to 84" | 120" | 120" | 120" | 120" | 120" | 120" | 120" |
| | | | | For Shade Widths to 90" | 108" | 108" | 108" | 108" | 108" | 102" | 108" |
| | | | | For Shade Widths to 96" | 102" | 102" | 102" | 102" | 102" | 102" | 102" |
| | | | | For Shade Widths to 102" | 84" | 84" | 84" | 84" | 84" | 84" | 84" |
| 1% Sheerweave 2500 | 126" | YES | YES | Non-Railroaded | | | | | | | |
| | | | | Maximum Width | 96" | 96" | 96" | 96" | 96" | 96" | 96" |
| | | | | | Maximum Height | | | | | | |
| | | | | For Shade Widths to 60" | 126" | 126" | 126" | 114" | 126" | 126" | 126" |
| | | | | For Shade Widths to 72" | 102" | 102" | 102" | 102" | 102" | 102" | 102" |
| | | | | For Shade Widths to 78" | 90" | 90" | 90" | 90" | 90" | 90" | 90" |
| | | | | For Shade Widths to 84" | 84" | 84" | 84" | 84" | 84" | 84" | 84" |
| | | | | For Shade Widths to 90" | 78" | 78" | 78" | 78" | 78" | 78" | 78" |
| | | | | For Shade Widths to 96" | 72" | 72" | 72" | 72" | 72" | 72" | 72" |
| | | | | Railroaded | | | | | | | |
| | | | | Maximum Width | 96" | 96" | 96" | 96" | 96" | 96" | 96" |
| | | | | | Maximum Height | | | | | | |
| | | | | For Shade Widths to 60" | 126" | 126" | 126" | 114" | 126" | 126" | 126" |
| | | | | For Shade Widths to 72" | 102" | 102" | 102" | 102" | 102" | 102" | 102" |
| | | | | For Shade Widths to 78" | 90" | 90" | 90" | 90" | 90" | 90" | 90" |
| | | | | For Shade Widths to 84" | 84" | 84" | 84" | 84" | 84" | 84" | 84" |
| | | | | For Shade Widths to 90" | 78" | 78" | 78" | 78" | 78" | 78" | 78" |
| | | | | For Shade Widths to 96" | 72" | 72" | 72" | 72" | 72" | 72" | 72" |
| 1% Sheerweave 2701 | 126" | YES | YES | Non-Railroaded | | | | | | | |
| | | | | Maximum Width | 96" | 96" | 96" | 96" | 96" | 96" | 96" |
| | | | | | Maximum Height | | | | | | |
| | | | | For Shade Widths to 60" | 126" | 126" | 126" | 126" | 126" | 126" | 126" |
| | | | | For Shade Widths to 72" | 102" | 102" | 102" | 102" | 102" | 102" | 102" |
| | | | | For Shade Widths to 78" | 90" | 90" | 90" | 90" | 90" | 90" | 90" |
| | | | | For Shade Widths to 84" | 84" | 84" | 84" | 84" | 84" | 84" | 84" |
| | | | | For Shade Widths to 90" | 78" | 78" | 78" | 78" | 78" | 78" | 78" |
| | | | | For Shade Widths to 96" | 72" | 72" | 72" | 72" | 72" | 72" | 72" |
| | | | | Railroaded | | | | | | | |
| | | | | Maximum Width | 96" | 96" | 96" | 96" | 96" | 96" | 96" |
| | | | | | Maximum Height | | | | | | |
| | | | | For Shade Widths to 60" | 126" | 126" | 126" | 126" | 126" | 126" | 126" |
| | | | | For Shade Widths to 72" | 102" | 102" | 102" | 102" | 102" | 102" | 102" |
| | | | | For Shade Widths to 78" | 90" | 90" | 90" | 90" | 90" | 90" | 90" |
| | | | | For Shade Widths to 84" | 84" | 84" | 84" | 84" | 84" | 84" | 84" |
| | | | | For Shade Widths to 90" | 78" | 78" | 78" | 78" | 78" | 78" | 78" |
| | | | | For Shade Widths to 96" | 72" | 72" | 72" | 72" | 72" | 72" | 72" |
| 1% Sheerweave 4901 | 98" | NO | NO | Non-Railroaded | | | | | | | |
| | | | | Maximum Width | 96" | 88" | 88" | 96" | 96" | 96" | 96" |
| | | | | | Maximum Height | | | | | | |
| | | | | For Shade Widths to 54" | 138" | 138" | 138" | 96" | 138" | 126" | 138" |
| | | | | For Shade Widths to 60" | 126" | 126" | 126" | 96" | 126" | 126" | 126" |
| | | | | For Shade Widths to 66" | 108" | 108" | 108" | 96" | 108" | 108" | 108" |
| | | | | For Shade Widths to 72" | 102" | 102" | 102" | 96" | 102" | 102" | 102" |
| | | | | For Shade Widths to 78" | 90" | 90" | 90" | 90" | 90" | 90" | 90" |
| | | | | For Shade Widths to 84" | 84" | 84" | 84" | 84" | 84" | 84" | 84" |
| | | | | For Shade Widths to 88" | 78" | 78" | 78" | 78" | 78" | 78" | 78" |
| | | | | For Shade Widths to 90" | 78" | N/A | N/A | 78" | 78" | 78" | 78" |
| | | | | For Shade Widths to 96" | 72" | N/A | N/A | 72" | 72" | 72" | 72" |
| 1% Sheerweave 5000 | 98" | NO | NO | Non-Railroaded | | | | | | | |
| | | | | Maximum Width | 96" | 90" | 90" | 96" | 96" | 96" | 96" |
| | | | | | Maximum Height | | | | | | |
| | | | | For Shade Widths to 60" | 126" | 86" | 86" | 54" | 86" | 75" | 126" |
| | | | | For Shade Widths to 72" | 102" | 86" | 86" | 54" | 86" | 75" | 102" |
| | | | | For Shade Widths to 78" | 90" | 86" | 86" | 54" | 86" | 75" | 90" |
| | | | | For Shade Widths to 84" | 84" | 84" | 84" | 54" | 84" | 75" | 84" |
| | | | | For Shade Widths to 90" | 78" | 78" | 78" | 54" | 78" | 75" | 78" |
| | | | | For Shade Widths to 96" | 72" | NA | NA | 54" | 72" | 72" | 72" |

# PRODUCT SIZE SPECIFICATIONS – REMOTELIFT™ ROLLUP 28 WIREFREE

**Minimum and Maximum Standards**
Please Note: Shade sizes that are wider than the fabric roll width indicated will be made with the fabric turned width for length (railroaded). The maximum width for non-railroaded shades is the roll width unless otherwise noted.

| Minimum: | Width | Height |
|---|---|---|
| R28WF | 17" | 12" |

Fabrics turned width for length will have a visible seam when fabricated longer than their maximum roll width less 10". Fabrics turned width for length may have an edge curl. This is not considered a defect in the product.

| Material Name | Roll Width | Railroad Option | Splice /Seam | | RemoteLift Shade without Top Treatment | RemoteLift with Deluxe Valance | RemoteLift with Fabric Valance | RemoteLift with Medium Cassette | RemoteLift with Large Cassette | RemoteLift with 3" Fascia | RemoteLift with 4" Fascia and Pocket Headrail |
|---|---|---|---|---|---|---|---|---|---|---|---|
| 1% Toka | 118" | YES | YES | Non-Railroaded | | | | | | | |
| | | | | Maximum Width | 96" | 96" | 96" | 96" | 96" | 96" | 96" |
| | | | | | Maximum Height | | | | | | |
| | | | | For Shade Widths to 60" | 126" | 126" | 126" | 96" | 126" | 126" | 126" |
| | | | | For Shade Widths to 72" | 102" | 102" | 102" | 96" | 102" | 102" | 102" |
| | | | | For Shade Widths to 78" | 90" | 90" | 90" | 90" | 90" | 90" | 90" |
| | | | | For Shade Widths to 84" | 84" | 84" | 84" | 84" | 84" | 84" | 84" |
| | | | | For Shade Widths to 90" | 78" | 78" | 78" | 78" | 78" | 78" | 78" |
| | | | | For Shade Widths to 96" | 72" | 72" | 72" | 72" | 72" | 72" | 72" |
| | | | | Railroaded | | | | | | | |
| | | | | Maximum Width | 96" | 96" | 96" | 96" | 96" | 96" | 96" |
| | | | | | Maximum Height | | | | | | |
| | | | | For Shade Widths to 60" | 126" | 126" | 126" | 96" | 126" | 126" | 126" |
| | | | | For Shade Widths to 72" | 102" | 102" | 102" | 96" | 102" | 102" | 102" |
| | | | | For Shade Widths to 78" | 90" | 90" | 90" | 90" | 90" | 90" | 90" |
| | | | | For Shade Widths to 84" | 84" | 84" | 84" | 84" | 84" | 84" | 84" |
| | | | | For Shade Widths to 90" | 78" | 78" | 78" | 78" | 78" | 78" | 78" |
| | | | | For Shade Widths to 96" | 72" | 72" | 72" | 72" | 72" | 72" | 72" |
| 3% E Screen | 122" | YES | YES | Non-Railroaded | | | | | | | |
| | | | | Maximum Width | 102" | 102" | 102" | 102" | 102" | 102" | 102" |
| | | | | | Maximum Height | | | | | | |
| | | | | For Shade Widths to 66" | 144" | 144" | 144" | 144" | 144" | 144" | 144" |
| | | | | For Shade Widths to 72" | 138" | 138" | 138" | 138" | 138" | 138" | 138" |
| | | | | For Shade Widths to 84" | 120" | 120" | 120" | 120" | 120" | 120" | 120" |
| | | | | For Shade Widths to 90" | 108" | 108" | 108" | 108" | 108" | 108" | 108" |
| | | | | For Shade Widths to 96" | 102" | 102" | 102" | 102" | 102" | 102" | 102" |
| | | | | For Shade Widths to 102" | 84" | 84" | 84" | 84" | 84" | 84" | 84" |
| | | | | Railroaded | | | | | | | |
| | | | | Maximum Width | 102" | 102" | 102" | 102" | 102" | 102" | 102" |
| | | | | | Maximum Height | | | | | | |
| | | | | For Shade Widths to 66" | 144" | 144" | 144" | 144" | 144" | 144" | 144" |
| | | | | For Shade Widths to 72" | 138" | 138" | 138" | 138" | 138" | 138" | 138" |
| | | | | For Shade Widths to 84" | 120" | 120" | 120" | 120" | 120" | 120" | 120" |
| | | | | For Shade Widths to 90" | 108" | 108" | 108" | 108" | 108" | 108" | 108" |
| | | | | For Shade Widths to 96" | 102" | 102" | 102" | 102" | 102" | 102" | 102" |
| | | | | For Shade Widths to 102" | 84" | 84" | 84" | 84" | 84" | 84" | 84" |
| 3% M Screen | 122" | YES | YES | Non-Railroaded | | | | | | | |
| | | | | Maximum Width | 102" | 102" | 102" | 102" | 102" | 102" | 102" |
| | | | | | Maximum Height | | | | | | |
| | | | | For Shade Widths to 66" | 144" | 144" | 144" | 144" | 144" | 144" | 144" |
| | | | | For Shade Widths to 72" | 138" | 138" | 138" | 138" | 138" | 138" | 138" |
| | | | | For Shade Widths to 84" | 120" | 120" | 120" | 120" | 120" | 120" | 120" |
| | | | | For Shade Widths to 90" | 108" | 108" | 108" | 108" | 108" | 108" | 108" |
| | | | | For Shade Widths to 96" | 102" | 102" | 102" | 102" | 102" | 102" | 102" |
| | | | | For Shade Widths to 102" | 84" | 84" | 84" | 84" | 84" | 84" | 84" |
| | | | | Railroaded | | | | | | | |
| | | | | Maximum Width | 102" | 102" | 102" | 102" | 102" | 102" | 102" |
| | | | | | Maximum Height | | | | | | |
| | | | | For Shade Widths to 66" | 144" | 144" | 144" | 144" | 144" | 144" | 144" |
| | | | | For Shade Widths to 72" | 138" | 138" | 138" | 138" | 138" | 138" | 138" |
| | | | | For Shade Widths to 84" | 120" | 120" | 120" | 120" | 120" | 120" | 120" |
| | | | | For Shade Widths to 90" | 108" | 108" | 108" | 108" | 108" | 108" | 108" |
| | | | | For Shade Widths to 96" | 102" | 102" | 102" | 102" | 102" | 102" | 102" |
| | | | | For Shade Widths to 102" | 84" | 84" | 84" | 84" | 84" | 84" | 84" |

# PRODUCT SIZE SPECIFICATIONS – REMOTELIFT™ ROLLUP 28 WIREFREE

**Minimum and Maximum Standards**

Please Note: Shade sizes that are wider than the fabric roll width indicated will be made with the fabric turned width for length (railroaded). The maximum width for non-railroaded shades is the roll width unless otherwise noted.

| Minimum: | Width | Height |
|---|---|---|
| R28WF | 17" | 12" |

Fabrics turned width for length will have a visible seam when fabricated longer than their maximum roll width less 10". Fabrics turned width for length may have an edge curl. This is not considered a defect in the product.

| Material Name | Roll Width | Railroad Option | Splice /Seam | | RemoteLift Shade without Top Treatment | RemoteLift with Deluxe Valance | RemoteLift with Fabric Valance | RemoteLift with Medium Cassette | RemoteLift with Large Cassette | RemoteLift with 3" Fascia | RemoteLift with 4" Fascia and Pocket Headrail |
|---|---|---|---|---|---|---|---|---|---|---|---|
| 3% Sheerweave 2410 | 126" | YES | YES | Non-Railroaded | | | | | | | |
| | | | | Maximum Width | 102" | 102" | 102" | 102" | 102" | 102" | 102" |
| | | | | | Maximum Height | | | | | | |
| | | | | For Shade Widths to 66" | 108" | 108" | 108" | 108" | 108" | 108" | 108" |
| | | | | For Shade Widths to 72" | 102" | 102" | 102" | 102" | 102" | 102" | 102" |
| | | | | For Shade Widths to 84" | 84" | 84" | 84" | 84" | 84" | 84" | 84" |
| | | | | For Shade Widths to 90" | 78" | 78" | 78" | 78" | 78" | 78" | 78" |
| | | | | For Shade Widths to 96" | 72" | 72" | 72" | 72" | 72" | 72" | 72" |
| | | | | For Shade Widths to 102" | 60" | 60" | 60" | 60" | 60" | 60" | 60" |
| | | | | Railroaded | | | | | | | |
| | | | | Maximum Width | 102" | 102" | 102" | 102" | 102" | 102" | 102" |
| | | | | | Maximum Height | | | | | | |
| | | | | For Shade Widths to 66" | 108" | 108" | 108" | 108" | 108" | 108" | 108" |
| | | | | For Shade Widths to 72" | 102" | 102" | 102" | 102" | 102" | 102" | 102" |
| | | | | For Shade Widths to 84" | 84" | 84" | 84" | 84" | 84" | 84" | 84" |
| | | | | For Shade Widths to 90" | 78" | 78" | 78" | 78" | 78" | 78" | 78" |
| | | | | For Shade Widths to 96" | 72" | 72" | 72" | 72" | 72" | 72" | 72" |
| | | | | For Shade Widths to 102" | 60" | 60" | 60" | 60" | 60" | 60" | 60" |
| 3% Sheerweave 2703 | 126" | YES | YES | Non-Railroaded | | | | | | | |
| | | | | Maximum Width | 96" | 96" | 96" | 96" | 96" | 96" | 96" |
| | | | | | Maximum Height | | | | | | |
| | | | | For Shade Widths to 54" | 138" | 138" | 138" | 96" | 138" | 126" | 138" |
| | | | | For Shade Widths to 60" | 126" | 126" | 126" | 96" | 126" | 126" | 126" |
| | | | | For Shade Widths to 66" | 108" | 108" | 108" | 96" | 108" | 108" | 108" |
| | | | | For Shade Widths to 72" | 102" | 102" | 102" | 96" | 102" | 102" | 102" |
| | | | | For Shade Widths to 78" | 90" | 90" | 90" | 90" | 90" | 90" | 90" |
| | | | | For Shade Widths to 84" | 84" | 84" | 84" | 84" | 84" | 84" | 84" |
| | | | | For Shade Widths to 90" | 78" | 78" | 78" | 78" | 78" | 78" | 78" |
| | | | | For Shade Widths to 96" | 72" | 72" | 72" | 72" | 72" | 72" | 72" |
| | | | | Railroaded | | | | | | | |
| | | | | Maximum Width | 96" | 96" | 96" | 96" | 96" | 96" | 96" |
| | | | | | Maximum Height | | | | | | |
| | | | | For Shade Widths to 54" | 138" | 138" | 138" | 96" | 138" | 126" | 138" |
| | | | | For Shade Widths to 60" | 126" | 126" | 126" | 96" | 126" | 126" | 126" |
| | | | | For Shade Widths to 66" | 108" | 108" | 108" | 96" | 108" | 108" | 108" |
| | | | | For Shade Widths to 72" | 102" | 102" | 102" | 96" | 102" | 102" | 102" |
| | | | | For Shade Widths to 78" | 90" | 90" | 90" | 90" | 90" | 90" | 90" |
| | | | | For Shade Widths to 84" | 84" | 84" | 84" | 84" | 84" | 84" | 84" |
| | | | | For Shade Widths to 90" | 78" | 78" | 78" | 78" | 78" | 78" | 78" |
| | | | | For Shade Widths to 96" | 72" | 72" | 72" | 72" | 72" | 72" | 72" |
| 3% Sheerweave 4400 | 126" | YES | YES | Non-Railroaded | | | | | | | |
| | | | | Maximum Width | 96" | 96" | 96" | 96" | 96" | 96" | 96" |
| | | | | | Maximum Height | | | | | | |
| | | | | For Shade Widths to 60" | 126" | 120" | 120" | 78" | 120" | 108" | 126" |
| | | | | For Shade Widths to 72" | 102" | 102" | 102" | 78" | 102" | 102" | 102" |
| | | | | For Shade Widths to 78" | 90" | 90" | 90" | 78" | 90" | 90" | 90" |
| | | | | For Shade Widths to 84" | 84" | 84" | 84" | 78" | 84" | 84" | 84" |
| | | | | For Shade Widths to 90" | 78" | 78" | 78" | 78" | 78" | 78" | 78" |
| | | | | For Shade Widths to 96" | 72" | 72" | 72" | 72" | 72" | 72" | 72" |
| | | | | Railroaded | | | | | | | |
| | | | | Maximum Width | 96" | 96" | 96" | 96" | 96" | 96" | 96" |
| | | | | | Maximum Height | | | | | | |
| | | | | For Shade Widths to 60" | 126" | 120" | 120" | 78" | 120" | 108" | 126" |
| | | | | For Shade Widths to 72" | 102" | 102" | 102" | 78" | 102" | 102" | 102" |
| | | | | For Shade Widths to 78" | 90" | 90" | 90" | 78" | 90" | 90" | 90" |
| | | | | For Shade Widths to 84" | 84" | 84" | 84" | 78" | 84" | 84" | 84" |
| | | | | For Shade Widths to 90" | 78" | 78" | 78" | 78" | 78" | 78" | 78" |
| | | | | For Shade Widths to 96" | 72" | 72" | 72" | 72" | 72" | 72" | 72" |
| 3% Sheerweave 4600 | 126" | YES | YES | Non-Railroaded | | | | | | | |
| | | | | Maximum Width | 96" | 96" | 96" | 96" | 96" | 96" | 96" |
| | | | | | Maximum Height | | | | | | |
| | | | | For Shade Widths to 54" | 120" | 120" | 120" | 84" | 120" | 114" | 120" |
| | | | | For Shade Widths to 60" | 120" | 120" | 120" | 84" | 120" | 114" | 120" |
| | | | | For Shade Widths to 66" | 108" | 108" | 108" | 84" | 108" | 108" | 108" |
| | | | | For Shade Widths to 72" | 102" | 102" | 102" | 84" | 102" | 102" | 102" |
| | | | | For Shade Widths to 78" | 90" | 90" | 90" | 84" | 90" | 90" | 90" |
| | | | | For Shade Widths to 84" | 84" | 84" | 84" | 84" | 84" | 84" | 84" |
| | | | | For Shade Widths to 90" | 78" | 78" | 78" | 78" | 78" | 78" | 78" |
| | | | | For Shade Widths to 96" | 72" | 72" | 72" | 72" | 72" | 72" | 72" |
| | | | | Railroaded | | | | | | | |
| | | | | Maximum Width | 96" | 96" | 96" | 96" | 96" | 96" | 96" |
| | | | | | Maximum Height | | | | | | |
| | | | | For Shade Widths to 54" | 120" | 120" | 120" | 84" | 120" | 114" | 120" |
| | | | | For Shade Widths to 60" | 120" | 120" | 120" | 84" | 120" | 114" | 120" |
| | | | | For Shade Widths to 66" | 108" | 108" | 108" | 84" | 108" | 108" | 108" |
| | | | | For Shade Widths to 72" | 102" | 102" | 102" | 84" | 102" | 102" | 102" |
| | | | | For Shade Widths to 78" | 90" | 90" | 90" | 84" | 90" | 90" | 90" |
| | | | | For Shade Widths to 84" | 84" | 84" | 84" | 84" | 84" | 84" | 84" |
| | | | | For Shade Widths to 90" | 78" | 78" | 78" | 78" | 78" | 78" | 78" |
| | | | | For Shade Widths to 96" | 72" | 72" | 72" | 72" | 72" | 72" | 72" |

# PRODUCT SIZE SPECIFICATIONS – REMOTELIFT™ ROLLUP 28 WIREFREE

**Minimum and Maximum Standards**

Please Note: Shade sizes that are wider than the fabric roll width indicated will be made with the fabric turned width for length (railroaded). The maximum width for non-railroaded shades is the roll width unless otherwise noted.

| Minimum: | Width | Height |
|---|---|---|
| R28WF | 17" | 12" |

Fabrics turned width for length will have a visible seam when fabricated longer than their maximum roll width less 10". Fabrics turned width for length may have an edge curl. This is not considered a defect in the product.

| Material Name | Roll Width | Railroad Option | Splice /Seam | | RemoteLift Shade without Top Treatment | RemoteLift with Deluxe Valance | RemoteLift with Fabric Valance | RemoteLift with Medium Cassette | RemoteLift with Large Cassette | RemoteLift with 3" Fascia | RemoteLift with 4" Fascia and Pocket Headrail |
|---|---|---|---|---|---|---|---|---|---|---|---|
| 3% Sheerweave 4903 | 98" | NO | NO | Non-Railroaded | | | | | | | |
| | | | | Maximum Width | 96" | 88" | 88" | 96" | 96" | 96" | 96" |
| | | | | | Maximum Height | | | | | | |
| | | | | For Shade Widths to 54" | 138" | 138" | 138" | 90" | 138" | 126" | 138" |
| | | | | For Shade Widths to 60" | 126" | 126" | 126" | 90" | 126" | 126" | 126" |
| | | | | For Shade Widths to 66" | 108" | 108" | 108" | 90" | 108" | 108" | 108" |
| | | | | For Shade Widths to 72" | 102" | 102" | 102" | 90" | 102" | 102" | 102" |
| | | | | For Shade Widths to 78" | 90" | 90" | 90" | 90" | 90" | 90" | 90" |
| | | | | For Shade Widths to 84" | 84" | 84" | 84" | 84" | 84" | 84" | 84" |
| | | | | For Shade Widths to 88" | 78" | 78" | 78" | 78" | 78" | 78" | 78" |
| | | | | For Shade Widths to 90" | 78" | NA | NA | 78" | 78" | 78" | 78" |
| | | | | For Shade Widths to 96" | 72" | NA | NA | 72" | 72" | 72" | 72" |
| 3% Sheerweave 5000 *(R07_02, 04, 05, 07, 10)* | 98" | NO | NO | Non-Railroaded | | | | | | | |
| | | | | Maximum Width | 96" | 88" | 88" | 96" | 96" | 96" | 96" |
| | | | | | Maximum Height | | | | | | |
| | | | | For Shade Widths to 60" | 126" | 72" | 72" | 42" | 72" | 66" | 126" |
| | | | | For Shade Widths to 72" | 102" | 72" | 72" | 42" | 72" | 66" | 102" |
| | | | | For Shade Widths to 78" | 90" | 72" | 72" | 42" | 72" | 66" | 90" |
| | | | | For Shade Widths to 84" | 84" | 72" | 72" | 42" | 72" | 66" | 84" |
| | | | | For Shade Widths to 88" | 78" | 72" | 72" | 42" | 72" | 66" | 78" |
| | | | | For Shade Widths to 90" | 78" | NA | NA | 42" | 72" | 66" | 78" |
| | | | | For Shade Widths to 96" | 72" | NA | NA | 42" | 72" | 66" | 72" |
| 3% Sheerweave 5000 *(R07_R11, R89, R90, R93, U10, U11)* | 98" | NO | NO | Non-Railroaded | | | | | | | |
| | | | | Maximum Width | 96" | 88" | 88" | 96" | 96" | 96" | 96" |
| | | | | | Maximum Height | | | | | | |
| | | | | For Shade Widths to 54" | 138" | 78" | 78" | 48" | 78" | 72" | 138" |
| | | | | For Shade Widths to 60" | 126" | 78" | 78" | 48" | 78" | 72" | 126" |
| | | | | For Shade Widths to 66" | 108" | 78" | 78" | 48" | 78" | 72" | 108" |
| | | | | For Shade Widths to 72" | 102" | 78" | 78" | 48" | 78" | 72" | 102" |
| | | | | For Shade Widths to 78" | 90" | 78" | 78" | 48" | 78" | 72" | 90" |
| | | | | For Shade Widths to 84" | 84" | 78" | 78" | 48" | 78" | 72" | 84" |
| | | | | For Shade Widths to 88" | 78" | 78" | 78" | 48" | 78" | 72" | 78" |
| | | | | For Shade Widths to 90" | 78" | N/A | N/A | 48" | 78" | 72" | 78" |
| | | | | For Shade Widths to 96" | 72" | N/A | N/A | 48" | 72" | 72" | 72" |
| 3% T Screen | 98" | YES | NO | Non-Railroaded | | | | | | | |
| | | | | Maximum Width | 98" | 88" | 88" | 98" | 98" | 98" | 98" |
| | | | | | Maximum Height | | | | | | |
| | | | | For Shade Widths to 66" | 144" | 144" | 144" | 108" | 144" | 144" | 144" |
| | | | | For Shade Widths to 72" | 138" | 138" | 138" | 108" | 138" | 138" | 138" |
| | | | | For Shade Widths to 84" | 120" | 120" | 120" | 108" | 120" | 120" | 120" |
| | | | | For Shade Widths to 88" | 108" | 108" | 108" | 108" | 108" | 108" | 108" |
| | | | | For Shade Widths to 90" | 108" | NA | NA | 108" | 108" | 108" | 108" |
| | | | | For Shade Widths to 96" | 102" | NA | NA | 102" | 102" | 102" | 102" |
| | | | | For Shade Widths to 98" | 84" | NA | NA | 84" | 84" | 84" | 84" |
| | | | | Railroaded | | | | | | | |
| | | | | Maximum Width | 108" | 108" | 108" | 108" | 108" | 108" | 108" |
| | | | | | Maximum Height | | | | | | |
| | | | | For Shade Widths to 96" | 86" | 86" | 86" | 86" | 86" | 86" | 86" |
| | | | | For Shade Widths to 102" | 84" | 84" | 84" | 84" | 84" | 84" | 84" |
| | | | | For Shade Widths to 108" | 66" | 66" | 66" | 66" | 66" | 66" | 66" |
| 4% S Screen | 122" | NO | NO | Non-Railroaded | | | | | | | |
| | | | | Maximum Width | 96" | 96" | 96" | 96" | 96" | 96" | 96" |
| | | | | | Maximum Height | | | | | | |
| | | | | For Shade Widths to 60" | 126" | 120" | 120" | 72" | 120" | 102" | 126" |
| | | | | For Shade Widths to 72" | 102" | 102" | 102" | 72" | 102" | 102" | 102" |
| | | | | For Shade Widths to 78" | 90" | 90" | 90" | 72" | 90" | 90" | 90" |
| | | | | For Shade Widths to 84" | 84" | 84" | 84" | 72" | 84" | 84" | 84" |
| | | | | For Shade Widths to 90" | 78" | 78" | 78" | 72" | 78" | 78" | 78" |
| | | | | For Shade Widths to 96" | 72" | 72" | 72" | 72" | 72" | 72" | 72" |
| 4% Silver Screen | 94" | YES | YES | Non-Railroaded | | | | | | | |
| | | | | Maximum Width | 94" | 84" | 84" | 94" | 94" | 94" | 94" |
| | | | | | Maximum Height | | | | | | |
| | | | | For Shade Widths to 66" | 144" | 144" | 144" | 144" | 144" | 144" | 144" |
| | | | | For Shade Widths to 72" | 138" | 138" | 138" | 138" | 138" | 138" | 138" |
| | | | | For Shade Widths to 84" | 120" | 120" | 120" | 120" | 120" | 120" | 120" |
| | | | | For Shade Widths to 90" | 108" | NA | NA | 108" | 108" | 108" | 108" |
| | | | | For Shade Widths to 94" | 102" | NA | NA | 102" | 102" | 102" | 102" |
| | | | | Railroaded | | | | | | | |
| | | | | Maximum Width | 102" | 102" | 102" | 102" | 102" | 102" | 102" |
| | | | | | Maximum Height | | | | | | |
| | | | | For Shade Widths to 66" | 144" | 144" | 144" | 144" | 144" | 144" | 144" |
| | | | | For Shade Widths to 72" | 138" | 138" | 138" | 138" | 138" | 138" | 138" |
| | | | | For Shade Widths to 84" | 120" | 120" | 120" | 120" | 120" | 120" | 120" |
| | | | | For Shade Widths to 90" | 108" | 108" | 108" | 108" | 108" | 108" | 108" |
| | | | | For Shade Widths to 94" | 102" | 102" | 102" | 102" | 102" | 102" | 102" |
| | | | | For Shade Widths to 102" | 84" | 84" | 84" | 84" | 84" | 84" | 84" |

# PRODUCT SIZE SPECIFICATIONS – REMOTELIFT™ ROLLUP 28 WIREFREE

**Minimum and Maximum Standards**
Please Note: Shade sizes that are wider than the fabric roll width indicated will be made with the fabric turned width for length (railroaded). The maximum width for non-railroaded shades is the roll width unless otherwise noted.

| Minimum: | Width | Height |
|---|---|---|
| R28WF | 17" | 12" |

Fabrics turned width for length will have a visible seam when fabricated longer than their maximum roll width less 10". Fabrics turned width for length may have an edge curl. This is not considered a defect in the product.

| Material Name | Roll Width | Railroad Option | Splice /Seam | | RemoteLift Shade without Top Treatment | RemoteLift with Deluxe Valance | RemoteLift with Fabric Valance | RemoteLift with Medium Cassette | RemoteLift with Large Cassette | RemoteLift with 3" Fascia | RemoteLift with 4" Fascia and Pocket Headrail |
|---|---|---|---|---|---|---|---|---|---|---|---|
| 5% E Screen | 122" | YES | YES | Non-Railroaded | | | | | | | |
| | | | | Maximum Width | 102" | 102" | 102" | 102" | 102" | 102" | 102" |
| | | | | | Maximum Height | | | | | | |
| | | | | For Shade Widths to 66" | 144" | 144" | 144" | 144" | 144" | 144" | 138" |
| | | | | For Shade Widths to 72" | 138" | 138" | 138" | 138" | 138" | 138" | 138" |
| | | | | For Shade Widths to 84" | 120" | 120" | 120" | 120" | 120" | 120" | 120" |
| | | | | For Shade Widths to 90" | 108" | 108" | 108" | 108" | 108" | 108" | 108" |
| | | | | For Shade Widths to 96" | 102" | 102" | 102" | 102" | 102" | 102" | 102" |
| | | | | For Shade Widths to 102" | 84" | 84" | 84" | 84" | 84" | 84" | 84" |
| | | | | Railroaded | | | | | | | |
| | | | | Maximum Width | 102" | 102" | 102" | 102" | 102" | 102" | 102" |
| | | | | | Maximum Height | | | | | | |
| | | | | For Shade Widths to 66" | 144" | 144" | 144" | 144" | 144" | 144" | 138" |
| | | | | For Shade Widths to 72" | 138" | 138" | 138" | 138" | 138" | 138" | 138" |
| | | | | For Shade Widths to 84" | 120" | 120" | 120" | 120" | 120" | 120" | 120" |
| | | | | For Shade Widths to 90" | 108" | 108" | 108" | 108" | 108" | 108" | 108" |
| | | | | For Shade Widths to 96" | 102" | 102" | 102" | 102" | 102" | 102" | 102" |
| | | | | For Shade Widths to 102" | 84" | 84" | 84" | 84" | 84" | 84" | 84" |
| 5% M Screen Deco | 98" | YES | YES | Non-Railroaded | | | | | | | |
| | | | | Maximum Width | 96" | 88" | 88" | 96" | 96" | 96" | 96" |
| | | | | | Maximum Height | | | | | | |
| | | | | For Shade Widths to 66" | 144" | 144" | 144" | 120" | 144" | 144" | 144" |
| | | | | For Shade Widths to 72" | 138" | 138" | 138" | 120" | 138" | 138" | 138" |
| | | | | For Shade Widths to 84" | 120" | 120" | 120" | 120" | 120" | 120" | 120" |
| | | | | For Shade Widths to 88" | 108" | 108" | 108" | 108" | 108" | 108" | 108" |
| | | | | For Shade Widths to 90" | 108" | NA | NA | 108" | 108" | 108" | 108" |
| | | | | For Shade Widths to 96" | 102" | NA | NA | 102" | 102" | 102" | 102" |
| | | | | Railroaded | | | | | | | |
| | | | | Maximum Width | 102" | 102" | 102" | 102" | 102" | 102" | 102" |
| | | | | | Maximum Height | | | | | | |
| | | | | For Shade Widths to 66" | 144" | 144" | 144" | 120" | 144" | 144" | 144" |
| | | | | For Shade Widths to 72" | 138" | 138" | 138" | 120" | 138" | 138" | 138" |
| | | | | For Shade Widths to 84" | 120" | 120" | 120" | 120" | 120" | 120" | 120" |
| | | | | For Shade Widths to 90" | 108" | 108" | 108" | 108" | 108" | 108" | 108" |
| | | | | For Shade Widths to 96" | 102" | 102" | 102" | 102" | 102" | 102" | 102" |
| | | | | For Shade Widths to 102" | 84" | 84" | 84" | 84" | 84" | 84" | 84" |
| 5% Sheerweave 2000 | 126" | NO | NO | Non-Railroaded | | | | | | | |
| | | | | Maximum Width | 96" | 96" | 96" | 96" | 96" | 96" | 96" |
| | | | | | Maximum Height | | | | | | |
| | | | | For Shade Widths to 54" | 138" | 138" | 138" | 132" | 138" | 138" | 138" |
| | | | | For Shade Widths to 60" | 126" | 126" | 126" | 126" | 126" | 126" | 126" |
| | | | | For Shade Widths to 66" | 108" | 108" | 108" | 108" | 108" | 108" | 108" |
| | | | | For Shade Widths to 72" | 102" | 102" | 102" | 102" | 102" | 102" | 102" |
| | | | | For Shade Widths to 78" | 90" | 90" | 90" | 90" | 90" | 90" | 90" |
| | | | | For Shade Widths to 84" | 84" | 84" | 84" | 84" | 84" | 84" | 84" |
| | | | | For Shade Widths to 90" | 78" | 78" | 78" | 78" | 78" | 78" | 78" |
| | | | | For Shade Widths to 96" | 72" | 72" | 72" | 72" | 72" | 72" | 72" |
| | | | | Railroaded | | | | | | | |
| | | | | Maximum Width | 96" | 96" | 96" | 96" | 96" | NA | NA |
| | | | | | Maximum Height | | | | | | |
| | | | | For Shade Widths to 54" | 120" | 120" | 120" | 120" | 120" | 120" | 120" |
| | | | | For Shade Widths to 60" | 120" | 120" | 120" | 120" | 120" | 120" | 120" |
| | | | | For Shade Widths to 66" | 108" | 108" | 108" | 108" | 108" | 108" | 108" |
| | | | | For Shade Widths to 72" | 102" | 102" | 102" | 102" | 102" | 102" | 102" |
| | | | | For Shade Widths to 78" | 90" | 90" | 90" | 90" | 90" | 90" | 90" |
| | | | | For Shade Widths to 84" | 84" | 84" | 84" | 84" | 84" | 84" | 84" |
| | | | | For Shade Widths to 90" | 78" | 78" | 78" | 78" | 78" | 78" | 78" |
| | | | | For Shade Widths to 96" | 72" | 72" | 72" | 72" | 72" | 72" | 72" |

# PRODUCT SIZE SPECIFICATIONS – REMOTELIFT™ ROLLUP 28 WIREFREE

**Minimum and Maximum Standards**
Please Note: Shade sizes that are wider than the fabric roll width indicated will be made with the fabric turned width for length (railroaded). The maximum width for non-railroaded shades is the roll width unless otherwise noted.

| Minimum: | Width | Height |
|---|---|---|
| R28WF | 17" | 12" |

Fabrics turned width for length will have a visible seam when fabricated longer than their maximum roll width less 10". Fabrics turned width for length may have an edge curl. This is not considered a defect in the product.

| Material Name | Roll Width | Railroad Option | Splice /Seam | | RemoteLift Shade without Top Treatment | RemoteLift with Deluxe Valance | RemoteLift with Fabric Valance | RemoteLift with Medium Cassette | RemoteLift with Large Cassette | RemoteLift with 3" Fascia | RemoteLift with 4" Fascia and Pocket Headrail |
|---|---|---|---|---|---|---|---|---|---|---|---|
| 5% Sheerweave 2390 | 126" | YES | YES | Non-Railroaded | | | | | | | |
| | | | | Maximum Width | 102" | 102" | 102" | 102" | 102" | 102" | 102" |
| | | | | | Maximum Height | | | | | | |
| | | | | For Shade Widths to 66" | 144" | 144" | 144" | 144" | 144" | 144" | 144" |
| | | | | For Shade Widths to 72" | 138" | 138" | 138" | 138" | 138" | 138" | 138" |
| | | | | For Shade Widths to 84" | 120" | 120" | 120" | 120" | 120" | 120" | 120" |
| | | | | For Shade Widths to 90" | 108" | 108" | 108" | 108" | 108" | 108" | 108" |
| | | | | For Shade Widths to 96" | 102" | 102" | 102" | 102" | 102" | 102" | 102" |
| | | | | For Shade Widths to 102" | 84" | 84" | 84" | 84" | 84" | 84" | 84" |
| | | | | Railroaded | | | | | | | |
| | | | | Maximum Width | 102" | 102" | 102" | 102" | 102" | 102" | 102" |
| | | | | | Maximum Height | | | | | | |
| | | | | For Shade Widths to 66" | 144" | 144" | 144" | 144" | 144" | 144" | 144" |
| | | | | For Shade Widths to 72" | 138" | 138" | 138" | 138" | 138" | 138" | 138" |
| | | | | For Shade Widths to 84" | 120" | 120" | 120" | 120" | 120" | 120" | 120" |
| | | | | For Shade Widths to 90" | 108" | 108" | 108" | 108" | 108" | 108" | 108" |
| | | | | For Shade Widths to 96" | 102" | 102" | 102" | 102" | 102" | 102" | 102" |
| | | | | For Shade Widths to 102" | 84" | 84" | 84" | 84" | 84" | 84" | 84" |
| 5% Sheerweave 2705 | 126" | NO | NO | Non-Railroaded | | | | | | | |
| | | | | Maximum Width | 98" | 98" | NA | 98" | 98" | 98" | 98" |
| | | | | | Maximum Height | | | | | | |
| | | | | For Shade Widths to 66" | 120" | 120" | NA | 102" | 120" | 120" | 120" |
| | | | | For Shade Widths to 72" | 120" | 120" | NA | 102" | 120" | 120" | 120" |
| | | | | For Shade Widths to 78" | 120" | 120" | NA | 102" | 120" | 120" | 120" |
| | | | | For Shade Widths to 84" | 120" | 120" | NA | 102" | 120" | 120" | 120" |
| | | | | For Shade Widths to 90" | 108" | N/A | NA | 102" | 108" | 108" | 108" |
| | | | | For Shade Widths to 96" | 102" | N/A | NA | 102" | 102" | 102" | 102" |
| | | | | For Shade Widths to 98" | 84" | NA | NA | 84" | 84" | 84" | 84" |
| 5% Sheerweave 4000 | 126" | YES | YES | Non-Railroaded | | | | | | | |
| | | | | Maximum Width | 96" | 96" | 96" | 96" | 96" | 96" | 96" |
| | | | | | Maximum Height | | | | | | |
| | | | | For Shade Widths to 60" | 126" | 114" | 114" | 72" | 114" | 100" | 126" |
| | | | | For Shade Widths to 66" | 108" | 108" | 108" | 72" | 108" | 100" | 108" |
| | | | | For Shade Widths to 72" | 102" | 102" | 102" | 72" | 102" | 100" | 102" |
| | | | | For Shade Widths to 78" | 90" | 90" | 90" | 72" | 90" | 90" | 90" |
| | | | | For Shade Widths to 84" | 84" | 84" | 84" | 72" | 84" | 84" | 84" |
| | | | | For Shade Widths to 90" | 78" | 78" | 78" | 72" | 78" | 78" | 78" |
| | | | | For Shade Widths to 96" | 72" | 72" | 72" | 72" | 72" | 72" | 72" |
| | | | | Railroaded | | | | | | | |
| | | | | Maximum Width | 96" | 96" | 96" | 96" | 96" | 96" | 96" |
| | | | | | Maximum Height | | | | | | |
| | | | | For Shade Widths to 60" | 126" | 114" | 114" | 72" | 114" | 100" | 126" |
| | | | | For Shade Widths to 66" | 108" | 108" | 108" | 72" | 108" | 100" | 108" |
| | | | | For Shade Widths to 72" | 102" | 102" | 102" | 72" | 102" | 100" | 102" |
| | | | | For Shade Widths to 78" | 90" | 90" | 90" | 72" | 90" | 90" | 90" |
| | | | | For Shade Widths to 84" | 84" | 84" | 84" | 72" | 84" | 84" | 84" |
| | | | | For Shade Widths to 90" | 78" | 78" | 78" | 72" | 78" | 78" | 78" |
| | | | | For Shade Widths to 96" | 72" | 72" | 72" | 72" | 72" | 72" | 72" |
| 5% Sheerweave 4500 | 126" | YES | YES | Non-Railroaded | | | | | | | |
| | | | | Maximum Width | 96" | 96" | 96" | 96" | 96" | 96" | 96" |
| | | | | | Maximum Height | | | | | | |
| | | | | For Shade Widths to 54" | 138" | 138" | 138" | 108" | 138" | 138" | 138" |
| | | | | For Shade Widths to 60" | 126" | 126" | 126" | 108" | 126" | 126" | 126" |
| | | | | For Shade Widths to 66" | 108" | 108" | 108" | 108" | 108" | 108" | 108" |
| | | | | For Shade Widths to 72" | 102" | 102" | 102" | 102" | 102" | 102" | 102" |
| | | | | For Shade Widths to 78" | 90" | 90" | 90" | 90" | 90" | 90" | 90" |
| | | | | For Shade Widths to 84" | 84" | 84" | 84" | 84" | 84" | 84" | 84" |
| | | | | For Shade Widths to 90" | 78" | 78" | 78" | 78" | 78" | 78" | 78" |
| | | | | For Shade Widths to 96" | 72" | 72" | 72" | 72" | 72" | 72" | 72" |
| | | | | Railroaded | | | | | | | |
| | | | | Maximum Width | 96" | 96" | 96" | 96" | 96" | 96" | 96" |
| | | | | | Maximum Height | | | | | | |
| | | | | For Shade Widths to 54" | 138" | 138" | 138" | 108" | 138" | 138" | 138" |
| | | | | For Shade Widths to 60" | 126" | 126" | 126" | 108" | 126" | 126" | 126" |
| | | | | For Shade Widths to 66" | 108" | 108" | 108" | 108" | 108" | 108" | 108" |
| | | | | For Shade Widths to 72" | 102" | 102" | 102" | 102" | 102" | 102" | 102" |
| | | | | For Shade Widths to 78" | 90" | 90" | 90" | 90" | 90" | 90" | 90" |
| | | | | For Shade Widths to 84" | 84" | 84" | 84" | 84" | 84" | 84" | 84" |
| | | | | For Shade Widths to 90" | 78" | 78" | 78" | 78" | 78" | 78" | 78" |
| | | | | For Shade Widths to 96" | 72" | 72" | 72" | 72" | 72" | 72" | 72" |

# PRODUCT SIZE SPECIFICATIONS – REMOTELIFT™ ROLLUP 28 WIREFREE

**Minimum and Maximum Standards**
Please Note: Shade sizes that are wider than the fabric roll width indicated will be made with the fabric turned width for length (railroaded). The maximum width for non-railroaded shades is the roll width unless otherwise noted.

| Minimum: | Width | Height |
|---|---|---|
| R28WF | 17" | 12" |

Fabrics turned width for length will have a visible seam when fabricated longer than their maximum roll width less 10". Fabrics turned width for length may have an edge curl. This is not considered a defect in the product.

| Material Name | Roll Width | Railroad Option | Splice /Seam | | RemoteLift Shade without Top Treatment | RemoteLift with Deluxe Valance | RemoteLift with Fabric Valance | RemoteLift with Medium Cassette | RemoteLift with Large Cassette | RemoteLift with 3" Fascia | RemoteLift with 4" Fascia and Pocket Headrail |
|---|---|---|---|---|---|---|---|---|---|---|---|
| **5% Sheerweave 5000** *(R10_01, 03, 06, 07, 09, 10, 11, 12, 13,14, 15, 16, 17, 18, 19, 20, 21)* | 98" | NO | NO | **Non-Railroaded** | | | | | | | |
| | | | | **Maximum Width** | 98" | 88" | 88" | 98" | 98" | 98" | 98" |
| | | | | | Maximum Height | | | | | | |
| | | | | **For Shade Widths to 60"** | 126" | 90" | 90" | 54" | 90" | 78" | 126" |
| | | | | **For Shade Widths to 66"** | 108" | 90" | 90" | 54" | 90" | 78" | 108" |
| | | | | **For Shade Widths to 72"** | 102" | 90" | 90" | 54" | 90" | 78" | 102" |
| | | | | **For Shade Widths to 84"** | 84" | 84" | 84" | 54" | 84" | 78" | 84" |
| | | | | **For Shade Widths to 88"** | 78" | 78" | 78" | 54" | 78" | 78" | 78" |
| | | | | **For Shade Widths to 90"** | 78" | NA | NA | 54" | 78" | 78" | 78" |
| | | | | **For Shade Widths to 98"** | 60" | NA | NA | 54" | 60" | 60" | 60" |
| **5% Sheerweave 5000** *(R10_Q51, S77, S84)* | 98" | NO | NO | **Non-Railroaded** | | | | | | | |
| | | | | **Maximum Width** | 96" | 88" | 88" | 96" | 96" | 96" | 96" |
| | | | | | Maximum Height | | | | | | |
| | | | | **For Shade Widths to 54"** | 138" | 90" | 90" | 58" | 90" | 78" | 138" |
| | | | | **For Shade Widths to 60"** | 126" | 90" | 90" | 58" | 90" | 78" | 126" |
| | | | | **For Shade Widths to 66"** | 108" | 90" | 90" | 58" | 90" | 78" | 108" |
| | | | | **For Shade Widths to 72"** | 102" | 90" | 90" | 58" | 90" | 78" | 102" |
| | | | | **For Shade Widths to 78"** | 90" | 90" | 90" | 58" | 90" | 78" | 90" |
| | | | | **For Shade Widths to 84"** | 84" | 84" | 84" | 58" | 84" | 78" | 84" |
| | | | | **For Shade Widths to 88"** | 78" | 78" | 78" | 58" | 78" | 78" | 78" |
| | | | | **For Shade Widths to 90"** | 78" | N/A | N/A | 58" | 78" | 78" | 78" |
| | | | | **For Shade Widths to 96"** | 72" | N/A | N/A | 58" | 72" | 72" | 72" |
| **5% Sheerweave 5000** *(R10_Q43, S82)* | 98" | NO | NO | **Non-Railroaded** | | | | | | | |
| | | | | **Maximum Width** | 96" | 88" | 88" | 96" | 96" | 96" | 96" |
| | | | | | Maximum Height | | | | | | |
| | | | | **For Shade Widths to 54"** | 138" | 102" | 102" | 66" | 102" | 90" | 138" |
| | | | | **For Shade Widths to 60"** | 126" | 102" | 102" | 66" | 102" | 90" | 126" |
| | | | | **For Shade Widths to 66"** | 108" | 102" | 102" | 66" | 102" | 90" | 108" |
| | | | | **For Shade Widths to 72"** | 102" | 102" | 102" | 66" | 102" | 90" | 102" |
| | | | | **For Shade Widths to 78"** | 90" | 90" | 90" | 66" | 90" | 90" | 90" |
| | | | | **For Shade Widths to 84"** | 84" | 84" | 84" | 66" | 84" | 84" | 84" |
| | | | | **For Shade Widths to 88"** | 78" | 78" | 78" | 66" | 78" | 78" | 78" |
| | | | | **For Shade Widths to 90"** | 78" | N/A | N/A | 66" | 78" | 78" | 78" |
| | | | | **For Shade Widths to 96"** | 72" | N/A | N/A | 66" | 72" | 72" | 72" |
| **7% Global Screen** | 118" | YES | YES | **Non-Railroaded** | | | | | | | |
| | | | | **Maximum Width** | 108" | 108" | 108" | 108" | 108" | 108" | 108" |
| | | | | | Maximum Height | | | | | | |
| | | | | **For Shade Widths to 66"** | 144" | 144" | 144" | 126" | 144" | 144" | 144" |
| | | | | **For Shade Widths to 72"** | 138" | 138" | 138" | 126" | 138" | 138" | 138" |
| | | | | **For Shade Widths to 78"** | 126" | 126" | 126" | 126" | 126" | 126" | 126" |
| | | | | **For Shade Widths to 84"** | 120" | 120" | 120" | 120" | 120" | 120" | 120" |
| | | | | **For Shade Widths to 90"** | 108" | 108" | 108" | 108" | 108" | 108" | 108" |
| | | | | **For Shade Widths to 96"** | 102" | 102" | 102" | 102" | 102" | 102" | 102" |
| | | | | **For Shade Widths to 102"** | 84" | 84" | 84" | 84" | 84" | 84" | 84" |
| | | | | **For Shade Widths to 108"** | 66" | 66" | 66" | 66" | 66" | 66" | 66" |
| | | | | **Railroaded** | | | | | | | |
| | | | | **Maximum Width** | 108" | 108" | 108" | 108" | 108" | 108" | 108" |
| | | | | | Maximum Height | | | | | | |
| | | | | **For Shade Widths to 66"** | 144" | 144" | 144" | 126" | 144" | 144" | 144" |
| | | | | **For Shade Widths to 72"** | 138" | 138" | 138" | 126" | 138" | 138" | 138" |
| | | | | **For Shade Widths to 78"** | 126" | 126" | 126" | 126" | 126" | 126" | 126" |
| | | | | **For Shade Widths to 84"** | 120" | 120" | 120" | 120" | 120" | 120" | 120" |
| | | | | **For Shade Widths to 90"** | 108" | 108" | 108" | 108" | 108" | 108" | 108" |
| | | | | **For Shade Widths to 96"** | 102" | 102" | 102" | 102" | 102" | 102" | 102" |
| | | | | **For Shade Widths to 102"** | 84" | 84" | 84" | 84" | 84" | 84" | 84" |
| | | | | **For Shade Widths to 108"** | 66" | 66" | 66" | 66" | 66" | 66" | 66" |

# PRODUCT SIZE SPECIFICATIONS – REMOTELIFT™ ROLLUP 28 WIREFREE

**Minimum and Maximum Standards**
Please Note: Shade sizes that are wider than the fabric roll width indicated will be made with the fabric turned width for length (railroaded). The maximum width for non-railroaded shades is the roll width unless otherwise noted.

| Minimum: | Width | Height |
|---|---|---|
| R28WF | 17" | 12" |

Fabrics turned width for length will have a visible seam when fabricated longer than their maximum roll width less 10". Fabrics turned width for length may have an edge curl. This is not considered a defect in the product.

| Material Name | Roll Width | Railroad Option | Splice /Seam | | RemoteLift Shade without Top Treatment | RemoteLift with Deluxe Valance | RemoteLift with Fabric Valance | RemoteLift with Medium Cassette | RemoteLift with Large Cassette | RemoteLift with 3" Fascia | RemoteLift with 4" Fascia and Pocket Headrail |
|---|---|---|---|---|---|---|---|---|---|---|---|
| **7% Sheerweave 5000** *(R34_Q46)* | **98"** | **NO** | **NO** | **Non-Railroaded** | | | | | | | |
| | | | | **Maximum Width** | **96"** | **88"** | **88"** | **96"** | **96"** | **96"** | **96"** |
| | | | | | **Maximum Height** | | | | | | |
| | | | | **For Shade Widths to 60"** | 126" | 102" | 102" | 66" | 102" | 90" | 126" |
| | | | | **For Shade Widths to 66"** | 108" | 102" | 102" | 66" | 102" | 90" | 108" |
| | | | | **For Shade Widths to 72"** | 102" | 102" | 102" | 66" | 102" | 90" | 102" |
| | | | | **For Shade Widths to 84"** | 84" | 84" | 84" | 66" | 84" | 84" | 84" |
| | | | | **For Shade Widths to 88"** | 78" | 78" | 78" | 66" | 78" | 78" | 78" |
| | | | | **For Shade Widths to 90"** | 78" | NA | NA | 66" | 78" | 78" | 78" |
| | | | | **For Shade Widths to 96"** | 72" | NA | NA | 66" | 72" | 72" | 72" |
| **7% Sheerweave 5000** *(R34_08, 09)* | **98"** | **NO** | **NO** | **Non-Railroaded** | | | | | | | |
| | | | | **Maximum Width** | **96"** | **88"** | **88"** | **96"** | **96"** | **96"** | **96"** |
| | | | | | **Maximum Height** | | | | | | |
| | | | | **For Shade Widths to 60"** | 126" | 126" | 126" | 78" | 126" | 108" | 126" |
| | | | | **For Shade Widths to 66"** | 108" | 108" | 108" | 78" | 108" | 108" | 108" |
| | | | | **For Shade Widths to 72"** | 102" | 102" | 102" | 78" | 102" | 102" | 102" |
| | | | | **For Shade Widths to 84"** | 84" | 84" | 84" | 78" | 84" | 84" | 84" |
| | | | | **For Shade Widths to 88"** | 78" | 78" | 78" | 78" | 78" | 78" | 78" |
| | | | | **For Shade Widths to 90"** | 78" | NA | NA | 78" | 78" | 78" | 78" |
| | | | | **For Shade Widths to 96"** | 72" | NA | NA | 72" | 72" | 72" | 72" |
| **7% Sheerweave 5000** *(R34_S73)* | **98"** | **NO** | **NO** | **Non-Railroaded** | | | | | | | |
| | | | | **Maximum Width** | **96"** | **88"** | **88"** | **96"** | **96"** | **96"** | **96"** |
| | | | | | **Maximum Height** | | | | | | |
| | | | | **For Shade Widths to 54"** | 138" | 96" | 96" | 60" | 96" | 84" | 138" |
| | | | | **For Shade Widths to 60"** | 126" | 96" | 96" | 60" | 96" | 84" | 126" |
| | | | | **For Shade Widths to 66"** | 108" | 96" | 96" | 60" | 96" | 84" | 108" |
| | | | | **For Shade Widths to 72"** | 102" | 96" | 96" | 60" | 96" | 84" | 102" |
| | | | | **For Shade Widths to 78"** | 90" | 90" | 90" | 60" | 90" | 84" | 90" |
| | | | | **For Shade Widths to 84"** | 84" | 84" | 84" | 60" | 84" | 84" | 84" |
| | | | | **For Shade Widths to 88"** | 78" | 78" | 78" | 60" | 78" | 78" | 78" |
| | | | | **For Shade Widths to 90"** | 78" | N/A | N/A | 60" | 78" | 78" | 78" |
| | | | | **For Shade Widths to 96"** | 72" | N/A | N/A | 60" | 72" | 72" | 72" |
| **10% E Screen** | **122"** | **YES** | **YES** | **Non-Railroaded** | | | | | | | |
| | | | | **Maximum Width** | **102"** | **102"** | **102"** | **102"** | **102"** | **102"** | **102"** |
| | | | | | **Maximum Height** | | | | | | |
| | | | | **For Shade Widths to 66"** | 144" | 144" | 144" | 138" | 144" | 144" | 144" |
| | | | | **For Shade Widths to 72"** | 138" | 138" | 138" | 138" | 138" | 138" | 138" |
| | | | | **For Shade Widths to 84"** | 120" | 120" | 120" | 120" | 120" | 120" | 120" |
| | | | | **For Shade Widths to 90"** | 108" | 108" | 108" | 108" | 108" | 108" | 108" |
| | | | | **For Shade Widths to 96"** | 102" | 102" | 102" | 102" | 102" | 102" | 102" |
| | | | | **For Shade Widths to 102"** | 84" | 84" | 84" | 84" | 84" | 84" | 84" |
| | | | | **Railroaded** | | | | | | | |
| | | | | **Maximum Width** | **102"** | **102"** | **102"** | **102"** | **102"** | **102"** | **102"** |
| | | | | | **Maximum Height** | | | | | | |
| | | | | **For Shade Widths to 66"** | 144" | 144" | 144" | 138" | 144" | 144" | 144" |
| | | | | **For Shade Widths to 72"** | 138" | 138" | 138" | 138" | 138" | 138" | 138" |
| | | | | **For Shade Widths to 84"** | 120" | 120" | 120" | 120" | 120" | 120" | 120" |
| | | | | **For Shade Widths to 90"** | 108" | 108" | 108" | 108" | 108" | 108" | 108" |
| | | | | **For Shade Widths to 96"** | 102" | 102" | 102" | 102" | 102" | 102" | 102" |
| | | | | **For Shade Widths to 102"** | 84" | 84" | 84" | 84" | 84" | 84" | 84" |
| **10% Sheerweave 2360** | **126"** | **NO** | **NO** | **Non-Railroaded** | | | | | | | |
| | | | | **Maximum Width** | **102"** | **102"** | **102"** | **102"** | **102"** | **102"** | **102"** |
| | | | | | **Maximum Height** | | | | | | |
| | | | | **For Shade Widths to 66"** | 144" | 144" | 144" | 138" | 144" | 144" | 144" |
| | | | | **For Shade Widths to 72"** | 138" | 138" | 138" | 138" | 138" | 138" | 138" |
| | | | | **For Shade Widths to 78"** | 126" | 126" | 126" | 126" | 126" | 126" | 126" |
| | | | | **For Shade Widths to 84"** | 120" | 120" | 120" | 120" | 120" | 120" | 120" |
| | | | | **For Shade Widths to 90"** | 108" | 108" | 108" | 108" | 108" | 108" | 108" |
| | | | | **For Shade Widths to 96"** | 102" | 102" | 102" | 102" | 102" | 102" | 102" |
| | | | | **For Shade Widths to 102"** | 84" | 84" | 84" | 84" | 84" | 84" | 84" |

# PRODUCT SIZE SPECIFICATIONS – REMOTELIFT™ ROLLUP 28 WIREFREE

**Minimum and Maximum Standards**
Please Note: Shade sizes that are wider than the fabric roll width indicated will be made with the fabric turned width for length (railroaded). The maximum width for non-railroaded shades is the roll width unless otherwise noted.

| Minimum: | Width | Height |
|---|---|---|
| R28WF | 17" | 12" |

Fabrics turned width for length will have a visible seam when fabricated longer than their maximum roll width less 10". Fabrics turned width for length may have an edge curl. This is not considered a defect in the product.

| Material Name | Roll Width | Railroad Option | Splice /Seam | | RemoteLift Shade without Top Treatment | RemoteLift with Deluxe Valance | RemoteLift with Fabric Valance | RemoteLift with Medium Cassette | RemoteLift with Large Cassette | RemoteLift with 3" Fascia | RemoteLift with 4" Fascia and Pocket Headrail |
|---|---|---|---|---|---|---|---|---|---|---|---|
| **10% Sheerweave 4100** | **98"** | **YES** | **YES** | **Non-Railroaded** | | | | | | | |
| | | | | **Maximum Width** | **96"** | **88"** | **88"** | **96"** | **96"** | **96"** | **96"** |
| | | | | | **Maximum Height** | | | | | | |
| | | | | **For Shade Widths to 54"** | 138" | 120" | 120" | 78" | 120" | 108" | 108" |
| | | | | **For Shade Widths to 60"** | 126" | 120" | 120" | 78" | 120" | 108" | 108" |
| | | | | **For Shade Widths to 66"** | 108" | 108" | 108" | 78" | 108" | 108" | 108" |
| | | | | **For Shade Widths to 72"** | 102" | 102" | 102" | 78" | 102" | 102" | 102" |
| | | | | **For Shade Widths to 78"** | 90" | 90" | 90" | 78" | 90" | 90" | 90" |
| | | | | **For Shade Widths to 84"** | 84" | 84" | 84" | 78" | 84" | 84" | 84" |
| | | | | **For Shade Widths to 88"** | 78" | 78" | 78" | 78" | 78" | 78" | 78" |
| | | | | **For Shade Widths to 90"** | 78" | N/A | N/A | 78" | 78" | 78" | 78" |
| | | | | **For Shade Widths to 96"** | 72" | N/A | N/A | 72" | 72" | 72" | 72" |
| | | | | **Railroaded** | | | | | | | |
| | | | | **Maximum Width** | **96"** | **96"** | **96"** | **96"** | **96"** | **96"** | **96"** |
| | | | | | **Maximum Height** | | | | | | |
| | | | | **For Shade Widths to 54"** | 120" | 120" | 120" | 78" | 120" | 108" | 108" |
| | | | | **For Shade Widths to 60"** | 120" | 120" | 120" | 78" | 120" | 108" | 108" |
| | | | | **For Shade Widths to 66"** | 108" | 108" | 108" | 78" | 108" | 108" | 108" |
| | | | | **For Shade Widths to 72"** | 102" | 102" | 102" | 78" | 102" | 102" | 102" |
| | | | | **For Shade Widths to 78"** | 90" | 90" | 90" | 78" | 90" | 90" | 90" |
| | | | | **For Shade Widths to 84"** | 84" | 84" | 84" | 78" | 84" | 84" | 84" |
| | | | | **For Shade Widths to 90"** | 78" | 78" | 78" | 78" | 78" | 78" | 78" |
| | | | | **For Shade Widths to 96"** | 72" | 72" | 72" | 72" | 72" | 72" | 72" |
| **10% Sheerweave 5000** *(R26_03)* | **98"** | **NO** | **NO** | **Non-Railroaded** | | | | | | | |
| | | | | **Maximum Width** | **96"** | **88"** | **88"** | **96"** | **96"** | **96"** | **96"** |
| | | | | | **Maximum Height** | | | | | | |
| | | | | **For Shade Widths to 60"** | 126" | 90" | 90" | 54" | 90" | 78" | 126" |
| | | | | **For Shade Widths to 66"** | 108" | 90" | 90" | 54" | 90" | 78" | 108" |
| | | | | **For Shade Widths to 72"** | 102" | 90" | 90" | 54" | 90" | 78" | 102" |
| | | | | **For Shade Widths to 84"** | 84" | 84" | 84" | 54" | 84" | 78" | 84" |
| | | | | **For Shade Widths to 88"** | 78" | 78" | 78" | 54" | 78" | 78" | 78" |
| | | | | **For Shade Widths to 90"** | 78" | NA | NA | 54" | 78" | 78" | 78" |
| | | | | **For Shade Widths to 98"** | 60" | NA | NA | 54" | 60" | 60" | 60" |
| **10% Sheerweave 5000** *(R26_U16, U24, U28, U29)* | **98"** | **NO** | **NO** | **Non-Railroaded** | | | | | | | |
| | | | | **Maximum Width** | **96"** | **88"** | **88"** | **96"** | **96"** | **96"** | **96"** |
| | | | | | **Maximum Height** | | | | | | |
| | | | | **For Shade Widths to 54"** | 138" | 102" | 102" | 66" | 102" | 90" | 138" |
| | | | | **For Shade Widths to 60"** | 126" | 102" | 102" | 66" | 102" | 90" | 126" |
| | | | | **For Shade Widths to 66"** | 108" | 102" | 102" | 66" | 102" | 90" | 108" |
| | | | | **For Shade Widths to 72"** | 102" | 102" | 102" | 66" | 102" | 90" | 102" |
| | | | | **For Shade Widths to 78"** | 90" | 90" | 90" | 66" | 90" | 90" | 90" |
| | | | | **For Shade Widths to 84"** | 84" | 84" | 84" | 66" | 84" | 84" | 84" |
| | | | | **For Shade Widths to 88"** | 78" | 78" | 78" | 66" | 78" | 78" | 78" |
| | | | | **For Shade Widths to 90"** | 78" | N/A | N/A | 66" | 78" | 78" | 78" |
| | | | | **For Shade Widths to 96"** | 72" | N/A | N/A | 66" | 72" | 72" | 72" |

# PRODUCT SIZE SPECIFICATIONS – REMOTELIFT™ ROLLUP 28 WIREFREE

**Minimum and Maximum Standards**
Please Note: Shade sizes that are wider than the fabric roll width indicated will be made with the fabric turned width for length (railroaded). The maximum width for non-railroaded shades is the roll width unless otherwise noted.

| Minimum: | Width | Height |
|---|---|---|
| R28WF | 17" | 12" |

Fabrics turned width for length will have a visible seam when fabricated longer than their maximum roll width less 10". Fabrics turned width for length may have an edge curl. This is not considered a defect in the product.

| Material Name | Roll Width | Railroad Option | Splice /Seam | | RemoteLift Shade without Top Treatment | RemoteLift with Deluxe Valance | RemoteLift with Fabric Valance | RemoteLift with Medium Cassette | RemoteLift with Large Cassette | RemoteLift with 3" Fascia | RemoteLift with 4" Fascia and Pocket Headrail |
|---|---|---|---|---|---|---|---|---|---|---|---|
| Alexandria | 78" | NO | NO | Non-Railroaded | | | | | | | |
| | | | | Maximum Width | 78" | 66" | 66" | 78" | 78" | 78" | 78" |
| | | | | | Maximum Height | | | | | | |
| | | | | For Shade Widths to 66" | 144" | 144" | 144" | 144" | 144" | 144" | 144" |
| | | | | For Shade Widths to 78" | 144" | NA | NA | 144" | 144" | 144" | 144" |
| Astaire | 94" | NO | NO | Maximum Width | 94" | NA | NA | 94" | 94" | 94" | 94" |
| | | | | | Maximum Height | | | | | | |
| | | | | For Shade Widths to 94" | 144" | NA | NA | 72" | 120" | 102" | 144" |
| Avila R Blackout | 118" | YES | YES | Non-Railroaded | | | | | | | |
| | | | | Maximum Width | 102" | 102" | 102" | 102" | 102" | 102" | 102" |
| | | | | | Maximum Height | | | | | | |
| | | | | For Shade Widths to 66" | 144" | 144" | 144" | 144" | 144" | 144" | 144" |
| | | | | For Shade Widths to 72" | 138" | 138" | 138" | 138" | 138" | 138" | 138" |
| | | | | For Shade Widths to 84" | 120" | 120" | 120" | 120" | 120" | 120" | 120" |
| | | | | For Shade Widths to 90" | 108" | 108" | 108" | 108" | 108" | 108" | 108" |
| | | | | For Shade Widths to 96" | 102" | 102" | 102" | 102" | 102" | 102" | 102" |
| | | | | For Shade Widths to 102" | 84" | 84" | 84" | 84" | 84" | 84" | 84" |
| | | | | Railroaded | | | | | | | |
| | | | | Maximum Width | 102" | 102" | 102" | 102" | 102" | 102" | 102" |
| | | | | | Maximum Height | | | | | | |
| | | | | For Shade Widths to 84" | 120" | 120" | 120" | 120" | 120" | 120" | 120" |
| | | | | For Shade Widths to 90" | 108" | 108" | 108" | 108" | 108" | 108" | 108" |
| | | | | For Shade Widths to 96" | 102" | 102" | 102" | 102" | 102" | 102" | 102" |
| | | | | For Shade Widths to 102" | 84" | 84" | 84" | 84" | 84" | 84" | 84" |
| Baroque | 78" | NO | NO | Non-Railroaded | | | | | | | |
| | | | | Maximum Width | 78" | 66" | 66" | 78" | 78" | 78" | 78" |
| | | | | | Maximum Height | | | | | | |
| | | | | For Shade Widths to 66" | 144" | 144" | 144" | 144" | 144" | 144" | 144" |
| | | | | For Shade Widths to 72" | 138" | NA | NA | 138" | 138" | 138" | 138" |
| | | | | For Shade Widths to 78" | 126" | NA | NA | 126" | 126" | 126" | 126" |
| Blackout - Solid | 72" | YES | YES | Non-Railroaded | | | | | | | |
| | | | | Maximum Width | 72" | 60" | 60" | 72" | 72" | 72" | 72" |
| | | | | | Maximum Height | | | | | | |
| | | | | For Shade Widths to 60" | 144" | 144" | NA | 144" | 144" | 144" | 144" |
| | | | | For Shade Widths to 66" | 144" | NA | NA | 144" | 144" | 144" | 144" |
| | | | | For Shade Widths to 72" | 138" | NA | NA | 138" | 138" | 138" | 138" |
| | | | | Railroaded | | | | | | | |
| | | | | Maximum Width | 108" | 108" | 108" | 108" | 108" | 108" | 108" |
| | | | | | Maximum Height | | | | | | |
| | | | | For Shade Widths to 66" | 144" | 144" | NA | 144" | 144" | 144" | 144" |
| | | | | For Shade Widths to 72" | 138" | 138" | NA | 138" | 138" | 138" | 138" |
| | | | | For Shade Widths to 84" | 120" | 120" | NA | 120" | 120" | 120" | 120" |
| | | | | For Shade Widths to 90" | 108" | 108" | NA | 108" | 108" | 108" | 108" |
| | | | | For Shade Widths to 96" | 102" | 102" | NA | 102" | 102" | 102" | 102" |
| | | | | For Shade Widths to 102" | 84" | 84" | NA | 84" | 84" | 84" | 84" |
| | | | | For Shade Widths to 108" | 66" | 66" | NA | 66" | 66" | 66" | 66" |
| Brilliance | 118" | NO | NO | Non-Railroaded | | | | | | | |
| | | | | Maximum Width | 114" | 108" | 108" | 114" | 114" | 114" | 114" |
| | | | | | Maximum Height | | | | | | |
| | | | | For Shade Widths to 102" | 144" | 144" | 144" | 144" | 144" | 144" | 144" |
| | | | | For Shade Widths to 108" | 108" | 108" | 108" | 108" | 108" | 108" | 108" |
| | | | | For Shade Widths to 114" | 84" | NA | NA | 84" | 84" | 84" | 84" |
| Brilliance Blackout | 118" | NO | NO | Non-Railroaded | | | | | | | |
| | | | | Maximum Width | 102" | 102" | 102" | 102" | 102" | 102" | 102" |
| | | | | | Maximum Height | | | | | | |
| | | | | For Shade Widths to 66" | 144" | 144" | 144" | 114" | 144" | 144" | 144" |
| | | | | For Shade Widths to 72" | 138" | 138" | 138" | 114" | 138" | 138" | 138" |
| | | | | For Shade Widths to 84" | 120" | 120" | 120" | 114" | 120" | 120" | 120" |
| | | | | For Shade Widths to 90" | 108" | 108" | 108" | 108" | 108" | 108" | 108" |
| | | | | For Shade Widths to 96" | 102" | 102" | 102" | 102" | 102" | 102" | 102" |
| | | | | For Shade Widths to 102" | 84" | 84" | 84" | 84" | 84" | 84" | 84" |

# PRODUCT SIZE SPECIFICATIONS – REMOTELIFT™ ROLLUP 28 WIREFREE

**Minimum and Maximum Standards**
Please Note: Shade sizes that are wider than the fabric roll width indicated will be made with the fabric turned width for length (railroaded). The maximum width for non-railroaded shades is the roll width unless otherwise noted.

| Minimum: | Width | Height |
|---|---|---|
| R28WF | 17" | 12" |

Fabrics turned width for length will have a visible seam when fabricated longer than their maximum roll width less 10". Fabrics turned width for length may have an edge curl. This is not considered a defect in the product.

| Material Name | Roll Width | Railroad Option | Splice /Seam | | RemoteLift Shade without Top Treatment | RemoteLift with Deluxe Valance | RemoteLift with Fabric Valance | RemoteLift with Medium Cassette | RemoteLift with Large Cassette | RemoteLift with 3" Fascia | RemoteLift with 4" Fascia and Pocket Headrail |
|---|---|---|---|---|---|---|---|---|---|---|---|
| Carrara | 110" | NO | NO | Non-Railroaded | | | | | | | |
| | | | | Maximum Width | 110" | 100" | 100" | 110" | 110" | 110" | 110" |
| | | | | | Maximum Height | | | | | | |
| | | | | For Shade Widths to 66" | 144" | 144" | 144" | 144" | 144" | 144" | 144" |
| | | | | For Shade Widths to 78" | 126" | 126" | 126" | 126" | 126" | 126" | 126" |
| | | | | For Shade Widths to 90" | 108" | 108" | 108" | 108" | 108" | 108" | 108" |
| | | | | For Shade Widths to 100" | 84" | 84" | 84" | 84" | 84" | 84" | 84" |
| | | | | For Shade Widths to 102" | 84" | NA | NA | 84" | 84" | 84" | 84" |
| | | | | For Shade Widths to 108" | 66" | NA | NA | 66" | 66" | 66" | 66" |
| | | | | For Shade Widths to 110" | 48" | NA | NA | 48" | 48" | 48" | 48" |
| Carrara Blackout | 110" | NO | NO | Non-Railroaded | | | | | | | |
| | | | | Maximum Width | 96" | 96" | 96" | 96" | 96" | 96" | 96" |
| | | | | | Maximum Height | | | | | | |
| | | | | For Shade Widths to 60" | 126" | 126" | 126" | 96" | 126" | 126" | 126" |
| | | | | For Shade Widths to 72" | 102" | 102" | 102" | 96" | 102" | 102" | 102" |
| | | | | For Shade Widths to 78" | 90" | 90" | 90" | 90" | 90" | 90" | 90" |
| | | | | For Shade Widths to 84" | 84" | 84" | 84" | 84" | 84" | 84" | 84" |
| | | | | For Shade Widths to 90" | 78" | 78" | 78" | 78" | 78" | 78" | 78" |
| | | | | For Shade Widths to 96" | 72" | 72" | 72" | 72" | 72" | 72" | 72" |
| Claudio | 110" | NO | NO | Non-Railroaded | | | | | | | |
| | | | | Maximum Width | 110" | 100" | 100" | 110" | 110" | 110" | 110" |
| | | | | | Maximum Height | | | | | | |
| | | | | For Shade Widths to 100" | 144" | 144" | 144" | 144" | 144" | 144" | 144" |
| | | | | For Shade Widths to 102" | 144" | NA | NA | 144" | 144" | 144" | 144" |
| | | | | For Shade Widths to 110" | 84" | NA | NA | 84" | 84" | 84" | 84" |
| Claudio Blackout | 110" | NO | NO | Non-Railroaded | | | | | | | |
| | | | | Maximum Width | 102" | 100" | 100" | 102" | 102" | 102" | 102" |
| | | | | | Maximum Height | | | | | | |
| | | | | For Shade Widths to 66" | 144" | 144" | 144" | 114" | 144" | 144" | 144" |
| | | | | For Shade Widths to 72" | 138" | 138" | 138" | 114" | 138" | 138" | 138" |
| | | | | For Shade Widths to 78" | 126" | 126" | 126" | 114" | 126" | 126" | 126" |
| | | | | For Shade Widths to 84" | 120" | 120" | 120" | 114" | 120" | 120" | 120" |
| | | | | For Shade Widths to 90" | 108" | 108" | 108" | 108" | 108" | 108" | 108" |
| | | | | For Shade Widths to 96" | 102" | 102" | 102" | 102" | 102" | 102" | 102" |
| | | | | For Shade Widths to 100" | 84" | 84" | 84" | 84" | 84" | 84" | 84" |
| | | | | For Shade Widths to 102" | 84" | NA | NA | 84" | 84" | 84" | 84" |
| Cusco | 110" | YES | YES | Non-Railroaded | | | | | | | |
| | | | | Maximum Width | 102" | 100" | 100" | 102" | 102" | 102" | 102" |
| | | | | | Maximum Height | | | | | | |
| | | | | For Shade Widths to 66" | 144" | 144" | 144" | 130" | 144" | 144" | 144" |
| | | | | For Shade Widths to 72" | 138" | 138" | 138" | 130" | 138" | 138" | 138" |
| | | | | For Shade Widths to 84" | 120" | 120" | 120" | 120" | 120" | 120" | 120" |
| | | | | For Shade Widths to 90" | 108" | 108" | 108" | 108" | 108" | 108" | 108" |
| | | | | For Shade Widths to 96" | 102" | 102" | 102" | 102" | 102" | 102" | 102" |
| | | | | For Shade Widths to 100" | 84" | 84" | 84" | 84" | 84" | 84" | 84" |
| | | | | For Shade Widths to 102" | 84" | NA | NA | 84" | 84" | 84" | 84" |
| | | | | Railroaded | | | | | | | |
| | | | | Maximum Width | 102" | 102" | 102" | 102" | 102" | 102" | 102" |
| | | | | | Maximum Height | | | | | | |
| | | | | For Shade Widths to 66" | 144" | 144" | 144" | 130" | 144" | 144" | 144" |
| | | | | For Shade Widths to 72" | 138" | 138" | 138" | 130" | 138" | 138" | 138" |
| | | | | For Shade Widths to 84" | 120" | 120" | 120" | 120" | 120" | 120" | 120" |
| | | | | For Shade Widths to 90" | 108" | 108" | 108" | 108" | 108" | 108" | 108" |
| | | | | For Shade Widths to 96" | 102" | 102" | 102" | 102" | 102" | 102" | 102" |
| | | | | For Shade Widths to 102" | 84" | 84" | 84" | 84" | 84" | 84" | 84" |
| Darien | 90" | NO | NO | Non-Railroaded | | | | | | | |
| | | | | Maximum Width | 90" | 80" | 80" | 90" | 90" | 90" | 90" |
| | | | | | Maximum Height | | | | | | |
| | | | | For Shade Widths to 80" | 144" | 144" | 144" | 144" | 144" | 144" | 144" |
| | | | | For Shade Widths to 90" | 144" | NA | NA | 144" | 144" | 144" | 144" |

# PRODUCT SIZE SPECIFICATIONS – REMOTELIFT™ ROLLUP 28 WIREFREE

**Minimum and Maximum Standards**
Please Note: Shade sizes that are wider than the fabric roll width indicated will be made with the fabric turned width for length (railroaded). The maximum width for non-railroaded shades is the roll width unless otherwise noted.

| Minimum: | Width | Height |
|---|---|---|
| R28WF | 17" | 12" |

Fabrics turned width for length will have a visible seam when fabricated longer than their maximum roll width less 10". Fabrics turned width for length may have an edge curl. This is not considered a defect in the product.

| Material Name | Roll Width | Railroad Option | Splice /Seam | | RemoteLift Shade without Top Treatment | RemoteLift with Deluxe Valance | RemoteLift with Fabric Valance | RemoteLift with Medium Cassette | RemoteLift with Large Cassette | RemoteLift with 3" Fascia | RemoteLift with 4" Fascia and Pocket Headrail |
|---|---|---|---|---|---|---|---|---|---|---|---|
| Drizzle | 94" | YES | YES | Non-Railroaded | | | | | | | |
| | | | | Maximum Width | 94" | 84" | 84" | 94" | 94" | 94" | 94" |
| | | | | | Maximum Height | | | | | | |
| | | | | For Shade Widths to 66" | 144" | 144" | 144" | 144" | 144" | 144" | 144" |
| | | | | For Shade Widths to 78" | 144" | 144" | 144" | 144" | 144" | 144" | 144" |
| | | | | For Shade Widths to 84" | 144" | 144" | 144" | 144" | 144" | 144" | 144" |
| | | | | For Shade Widths to 90" | 144" | NA | NA | 144" | 144" | 144" | 144" |
| | | | | For Shade Widths over 90" | 144" | NA | NA | 144" | 144" | 144" | 144" |
| | | | | Railroaded | | | | | | | |
| | | | | Maximum Width | 114" | 114" | 114" | 114" | 114" | 114" | 114" |
| | | | | | Maximum Height | | | | | | |
| | | | | For Shade Widths to 102" | 120" | 120" | 120" | 120" | 120" | 120" | 120" |
| | | | | For Shade Widths to 108" | 108" | 108" | 108" | 108" | 108" | 108" | 108" |
| | | | | For Shade Widths to 114" | 84" | 84" | 84" | 84" | 84" | 84" | 84" |
| Fiona | 78" | NO | NO | Non-Railroaded | | | | | | | |
| | | | | Maximum Width | 78" | 70" | 70" | 78" | 78" | 78" | 78" |
| | | | | | Maximum Height | | | | | | |
| | | | | For Shade Widths to 66" | 144" | 144" | 144" | 144" | 144" | 144" | 144" |
| | | | | For Shade Widths to 70" | 138" | 138" | 138" | 138" | 138" | 138" | 138" |
| | | | | For Shade Widths to 72" | 138" | NA | NA | 138" | 138" | 138" | 138" |
| | | | | For Shade Widths to 78" | 126" | NA | NA | 126" | 126" | 126" | 126" |
| Flocke Blackout | 94" | YES | YES | Non-Railroaded | | | | | | | |
| | | | | Maximum Width | 94" | 84" | 84" | 94" | 94" | 94" | 94" |
| | | | | | Maximum Height | | | | | | |
| | | | | For Shade Widths to 66" | 108" | 108" | 108" | 108" | 108" | 108" | 108" |
| | | | | For Shade Widths to 72" | 102" | 102" | 102" | 102" | 102" | 102" | 102" |
| | | | | For Shade Widths to 84" | 84" | 84" | 84" | 84" | 84" | 84" | 84" |
| | | | | For Shade Widths to 90" | 78" | NA | NA | 78" | 78" | 78" | 78" |
| | | | | For Shade Widths to 94" | 72" | NA | NA | 72" | 72" | 72" | 72" |
| | | | | Railroaded | | | | | | | |
| | | | | Maximum Width | 102" | 102" | 102" | 102" | 102" | 102" | 102" |
| | | | | | Maximum Height | | | | | | |
| | | | | For Shade Widths to 66" | 108" | 108" | 108" | 108" | 108" | 108" | 108" |
| | | | | For Shade Widths to 72" | 102" | 102" | 102" | 102" | 102" | 102" | 102" |
| | | | | For Shade Widths to 84" | 84" | 84" | 84" | 84" | 84" | 84" | 84" |
| | | | | For Shade Widths to 90" | 78" | 78" | 78" | 78" | 78" | 78" | 78" |
| | | | | For Shade Widths to 96" | 72" | 72" | 72" | 72" | 72" | 72" | 72" |
| | | | | For Shade Widths to 102" | 60" | 60" | 60" | 60" | 60" | 60" | 60" |
| Hayworth | 98" | YES | YES | Non-Railroaded | | | | | | | |
| | | | | Maximum Width | 98" | 88" | 88" | 98" | 98" | 98" | 98" |
| | | | | | Maximum Height | | | | | | |
| | | | | For Shade Widths to 88" | 144" | 144" | 144" | 144" | 144" | 144" | 144" |
| | | | | For Shade Widths to 98" | 144" | NA | NA | 144" | 144" | 144" | 144" |
| | | | | Railroaded | | | | | | | |
| | | | | Maximum Width | 114" | 114" | 114" | 114" | 114" | 114" | 114" |
| | | | | | Maximum Height | | | | | | |
| | | | | For Shade Widths to 102" | 144" | 144" | 144" | 144" | 144" | 144" | 144" |
| | | | | For Shade Widths to 108" | 108" | 108" | 108" | 108" | 108" | 108" | 108" |
| | | | | For Shade Widths to 114" | 84" | 84" | 84" | 84" | 84" | 84" | 84" |
| Illusion | 72" | YES | NO | Non-Railroaded | | | | | | | |
| | | | | Maximum Width | 72" | 60" | 60" | 72" | 72" | 72" | 72" |
| | | | | | Maximum Height | | | | | | |
| | | | | For Shade Widths to 60" | 144" | 144" | 144" | 144" | 144" | 144" | 144" |
| | | | | For Shade Widths to 72" | 144" | NA | NA | 144" | 144" | 144" | 144" |
| | | | | Railroaded | | | | | | | |
| | | | | Maximum Width | 114" | 114" | 114" | 114" | 114" | 114" | 114" |
| | | | | | Maximum Height | | | | | | |
| | | | | For Shade Widths to 114" | 60" | 60" | 60" | 60" | 60" | 60" | 60" |

# PRODUCT SIZE SPECIFICATIONS – REMOTELIFT™ ROLLUP 28 WIREFREE

**Minimum and Maximum Standards**
Please Note: Shade sizes that are wider than the fabric roll width indicated will be made with the fabric turned width for length (railroaded). The maximum width for non-railroaded shades is the roll width unless otherwise noted.

| Minimum: | Width | Height |
|---|---|---|
| R28WF | 17" | 12" |

Fabrics turned width for length will have a visible seam when fabricated longer than their maximum roll width less 10". Fabrics turned width for length may have an edge curl. This is not considered a defect in the product.

| Material Name | Roll Width | Railroad Option | Splice /Seam | | RemoteLift Shade without Top Treatment | RemoteLift with Deluxe Valance | RemoteLift with Fabric Valance | RemoteLift with Medium Cassette | RemoteLift with Large Cassette | RemoteLift with 3" Fascia | RemoteLift with 4" Fascia and Pocket Headrail |
|---|---|---|---|---|---|---|---|---|---|---|---|
| Jasper | 110" | YES | YES | Non-Railroaded | | | | | | | |
| | | | | Maximum Width | 108" | 100" | 100" | 108" | 108" | 108" | 108" |
| | | | | | Maximum Height | | | | | | |
| | | | | For Shade Widths to 66" | 144" | 144" | 144" | 144" | 144" | 144" | 144" |
| | | | | For Shade Widths to 72" | 138" | 138" | 138" | 138" | 138" | 138" | 138" |
| | | | | For Shade Widths to 84" | 120" | 120" | 120" | 120" | 120" | 120" | 120" |
| | | | | For Shade Widths to 90" | 108" | 108" | 108" | 108" | 108" | 108" | 108" |
| | | | | For Shade Widths to 96" | 102" | 102" | 102" | 102" | 102" | 102" | 102" |
| | | | | For Shade Widths to 100" | 84" | 84" | 84" | 84" | 84" | 84" | 84" |
| | | | | For Shade Widths to 102" | 84" | NA | NA | 84" | 84" | 84" | 84" |
| | | | | For Shade Widths to 108" | 66" | NA | NA | 66" | 66" | 66" | 66" |
| | | | | Railroaded | | | | | | | |
| | | | | Maximum Width | 114" | 114" | 114" | 114" | 114" | 114" | 114" |
| | | | | | Maximum Height | | | | | | |
| | | | | For Shade Widths to 66" | 144" | 144" | 144" | 144" | 144" | 144" | 144" |
| | | | | For Shade Widths to 72" | 138" | 138" | 138" | 138" | 138" | 138" | 138" |
| | | | | For Shade Widths to 84" | 120" | 120" | 120" | 120" | 120" | 120" | 120" |
| | | | | For Shade Widths to 90" | 108" | 108" | 108" | 108" | 108" | 108" | 108" |
| | | | | For Shade Widths to 96" | 102" | 102" | 102" | 102" | 102" | 102" | 102" |
| | | | | For Shade Widths to 102" | 84" | 84" | 84" | 84" | 84" | 84" | 84" |
| | | | | For Shade Widths to 108" | 66" | 66" | 66" | 66" | 66" | 66" | 66" |
| | | | | For Shade Widths to 114" | 48" | 48" | 48" | 48" | 48" | 48" | 48" |
| Linview | 122" | YES | YES | Non-Railroaded | | | | | | | |
| | | | | Maximum Width | 108" | 108" | 108" | 108" | 108" | 108" | 108" |
| | | | | | Maximum Height | | | | | | |
| | | | | For Shade Widths to 96" | 144" | 144" | 144" | 144" | 144" | 144" | 144" |
| | | | | For Shade Widths to 102" | 144" | 144" | 144" | 144" | 144" | 144" | 144" |
| | | | | For Shade Widths to 108" | 108" | 108" | 108" | 108" | 108" | 108" | 108" |
| | | | | Railroaded | | | | | | | |
| | | | | Maximum Width | 108" | 108" | 108" | 108" | 108" | 108" | 108" |
| | | | | | Maximum Height | | | | | | |
| | | | | For Shade Widths to 96" | 120" | 120" | 120" | 120" | 120" | 120" | 120" |
| | | | | For Shade Widths to 102" | 120" | 120" | 120" | 120" | 120" | 120" | 120" |
| | | | | For Shade Widths to 108" | 108" | 108" | 108" | 108" | 108" | 108" | 108" |
| Linview Blackout | 94" | NO | NO | Non-Railroaded | | | | | | | |
| | | | | Maximum Width | 94" | 84" | 84" | 94" | 94" | 94" | 94" |
| | | | | | Maximum Height | | | | | | |
| | | | | For Shade Widths to 66" | 144" | 144" | 144" | 144" | 144" | 144" | 144" |
| | | | | For Shade Widths to 72" | 138" | 138" | 138" | 138" | 138" | 138" | 138" |
| | | | | For Shade Widths to 84" | 120" | 120" | 120" | 120" | 120" | 120" | 120" |
| | | | | For Shade Widths to 90" | 108" | NA | NA | 108" | 108" | 108" | 108" |
| | | | | For Shade Widths to 94" | 102" | NA | NA | 102" | 102" | 102" | 102" |
| Montero | 94" | NO | NO | Non-Railroaded | | | | | | | |
| | | | | Maximum Width | 94" | 84" | 84" | 94" | 94" | 94" | 94" |
| | | | | | Maximum Height | | | | | | |
| | | | | For Shade Widths to 72" | 138" | 138" | 138" | 132" | 138" | 138" | 138" |
| | | | | For Shade Widths to 84" | 120" | 120" | 120" | 120" | 120" | 120" | 120" |
| | | | | For Shade Widths to 90" | 108" | NA | NA | 108" | 108" | 108" | 108" |
| | | | | For Shade Widths to 94" | 102" | NA | NA | 102" | 102" | 102" | 102" |
| Moravia | 96" | NO | NO | Non-Railroaded | | | | | | | |
| | | | | Maximum Width | 96" | 84" | 84" | 96" | 96" | 96" | 96" |
| | | | | | Maximum Height | | | | | | |
| | | | | For Shade Widths to 84" | 144" | 144" | 144" | 138" | 144" | 144" | 144" |
| | | | | For Shade Widths to 96" | 144" | NA | NA | 138" | 144" | 144" | 144" |

# PRODUCT SIZE SPECIFICATIONS – REMOTELIFT™ ROLLUP 28 WIREFREE

**Minimum and Maximum Standards**
Please Note: Shade sizes that are wider than the fabric roll width indicated will be made with the fabric turned width for length (railroaded). The maximum width for non-railroaded shades is the roll width unless otherwise noted.

| Minimum: | Width | Height |
|---|---|---|
| R28WF | 17" | 12" |

Fabrics turned width for length will have a visible seam when fabricated longer than their maximum roll width less 10". Fabrics turned width for length may have an edge curl. This is not considered a defect in the product.

| Material Name | Roll Width | Railroad Option | Splice /Seam | | RemoteLift Shade without Top Treatment | RemoteLift with Deluxe Valance | RemoteLift with Fabric Valance | RemoteLift with Medium Cassette | RemoteLift with Large Cassette | RemoteLift with 3" Fascia | RemoteLift with 4" Fascia and Pocket Headrail |
|---|---|---|---|---|---|---|---|---|---|---|---|
| Santa Cruz | 94" | NO | NO | Non-Railroaded | | | | | | | |
| | | | | Maximum Width | 94" | 84" | 84" | 94" | 94" | 94" | 94" |
| | | | | | Maximum Height | | | | | | |
| | | | | For Shade Widths to 72" | 138" | 138" | 138" | 138" | 138" | 138" | 138" |
| | | | | For Shade Widths to 84" | 120" | 120" | 120" | 120" | 120" | 120" | 120" |
| | | | | For Shade Widths to 90" | 108" | NA | NA | 108" | 108" | 108" | 108" |
| | | | | For Shade Widths to 94" | 102" | NA | NA | 102" | 102" | 102" | 102" |
| Santa Cruz Blackout | 94" | NO | NO | Non-Railroaded | | | | | | | |
| | | | | Maximum Width | 94" | 84" | 84" | 94" | 94" | 94" | 94" |
| | | | | | Maximum Height | | | | | | |
| | | | | For Shade Widths to 60" | 126" | 126" | 126" | 102" | 126" | 126" | 126" |
| | | | | For Shade Widths to 72" | 102" | 102" | 102" | 102" | 102" | 102" | 102" |
| | | | | For Shade Widths to 78" | 90" | 90" | 90" | 90" | 90" | 90" | 90" |
| | | | | For Shade Widths to 84" | 84" | 84" | 84" | 84" | 84" | 84" | 84" |
| | | | | For Shade Widths to 90" | 78" | NA | NA | 78" | 78" | 78" | 78" |
| | | | | For Shade Widths to 94" | 72" | NA | NA | 72" | 72" | 72" | 72" |
| Scala Blackout | 110" | YES | YES | Non-Railroaded | | | | | | | |
| | | | | Maximum Width | 102" | 96" | 96" | 102" | 102" | 102" | 102" |
| | | | | | Maximum Height | | | | | | |
| | | | | For Shade Widths to 66" | 144" | 144" | NA | 144" | 144" | 144" | 144" |
| | | | | For Shade Widths to 72" | 138" | 138" | NA | 138" | 138" | 138" | 138" |
| | | | | For Shade Widths to 84" | 120" | 120" | NA | 120" | 120" | 120" | 120" |
| | | | | For Shade Widths to 90" | 108" | 108" | NA | 108" | 108" | 108" | 108" |
| | | | | For Shade Widths to 96" | 102" | 102" | NA | 102" | 102" | 102" | 102" |
| | | | | For Shade Widths to 102" | 84" | NA | NA | 84" | 84" | 84" | 84" |
| | | | | Railroaded | | | | | | | |
| | | | | Maximum Width | 102" | 102" | 102" | 102" | 102" | 102" | 102" |
| | | | | | Maximum Height | | | | | | |
| | | | | For Shade Widths to 66" | 144" | 144" | NA | 144" | 144" | 144" | 144" |
| | | | | For Shade Widths to 72" | 138" | 138" | NA | 138" | 138" | 138" | 138" |
| | | | | For Shade Widths to 84" | 120" | 120" | NA | 120" | 120" | 120" | 120" |
| | | | | For Shade Widths to 90" | 108" | 108" | NA | 108" | 108" | 108" | 108" |
| | | | | For Shade Widths to 96" | 102" | 102" | NA | 102" | 102" | 102" | 102" |
| | | | | For Shade Widths to 102" | 84" | 84" | NA | 84" | 84" | 84" | 84" |
| Sheerweave 7200R | 118" | NO | NO | Non-Railroaded | | | | | | | |
| | | | | Maximum Width | 102" | 102" | 102" | 102" | 102" | 102" | 102" |
| | | | | | Maximum Height | | | | | | |
| | | | | For Shade Widths to 66" | 144" | 144" | 144" | 114" | 144" | 144" | 144" |
| | | | | For Shade Widths to 72" | 138" | 138" | 138" | 114" | 138" | 138" | 138" |
| | | | | For Shade Widths to 78" | 126" | 126" | 126" | 114" | 126" | 126" | 126" |
| | | | | For Shade Widths to 84" | 120" | 120" | 120" | 114" | 120" | 120" | 120" |
| | | | | For Shade Widths to 90" | 108" | 108" | 108" | 108" | 108" | 108" | 108" |
| | | | | For Shade Widths to 96" | 102" | 102" | 102" | 102" | 102" | 102" | 102" |
| | | | | For Shade Widths to 102" | 84" | 84" | 84" | 84" | 84" | 84" | 84" |
| Sheerweave 7250R | 118" | NO | NO | Non-Railroaded | | | | | | | |
| | | | | Maximum Width | 96" | 96" | 96" | 96" | 96" | 96" | 96" |
| | | | | | Maximum Height | | | | | | |
| | | | | For Shade Widths to 96" | 120" | 120" | 120" | 120" | 120" | 120" | 120" |
| Sheerweave 7400 | 118" | NO | NO | Non-Railroaded | | | | | | | |
| | | | | Maximum Width | 96" | 96" | 96" | 96" | 96" | 96" | 96" |
| | | | | | Maximum Height | | | | | | |
| | | | | For Shade Widths to 54" | 138" | 132" | 132" | 84" | 132" | 114" | 138" |
| | | | | For Shade Widths to 60" | 126" | 126" | 126" | 84" | 126" | 114" | 126" |
| | | | | For Shade Widths to 66" | 108" | 108" | 108" | 84" | 108" | 108" | 108" |
| | | | | For Shade Widths to 72" | 102" | 102" | 102" | 84" | 102" | 102" | 102" |
| | | | | For Shade Widths to 78" | 90" | 90" | 90" | 84" | 90" | 90" | 90" |
| | | | | For Shade Widths to 84" | 84" | 84" | 84" | 84" | 84" | 84" | 84" |
| | | | | For Shade Widths to 90" | 78" | 78" | 78" | 78" | 78" | 78" | 78" |
| | | | | For Shade Widths to 96" | 72" | 72" | 72" | 72" | 72" | 72" | 72" |
| Sheerweave 7450 | 118" | NO | NO | Non-Railroaded | | | | | | | |
| | | | | Maximum Width | 108" | 108" | 108" | 108" | 108" | 108" | 108" |
| | | | | | Maximum Height | | | | | | |
| | | | | For Shade Widths to 96" | 144" | 144" | 144" | 132" | 144" | 144" | 144" |
| | | | | For Shade Widths to 102" | 144" | 144" | 144" | 132" | 144" | 144" | 144" |
| | | | | For Shade Widths to 108" | 108" | 108" | 108" | 108" | 108" | 108" | 108" |

# PRODUCT SIZE SPECIFICATIONS – REMOTELIFT™ ROLLUP 28 WIREFREE

**Minimum and Maximum Standards**
Please Note: Shade sizes that are wider than the fabric roll width indicated will be made with the fabric turned width for length (railroaded). The maximum width for non-railroaded shades is the roll width unless otherwise noted.

| Minimum: | Width | Height |
|---|---|---|
| R28WF | 17" | 12" |

Fabrics turned width for length will have a visible seam when fabricated longer than their maximum roll width less 10". Fabrics turned width for length may have an edge curl. This is not considered a defect in the product.

| Material Name | Roll Width | Railroad Option | Splice /Seam | | RemoteLift Shade without Top Treatment | RemoteLift with Deluxe Valance | RemoteLift with Fabric Valance | RemoteLift with Medium Cassette | RemoteLift with Large Cassette | RemoteLift with 3" Fascia | RemoteLift with 4" Fascia and Pocket Headrail |
|---|---|---|---|---|---|---|---|---|---|---|---|
| Sheerweave 7500 | 118" | NO | NO | Non-Railroaded | | | | | | | |
| | | | | Maximum Width | 96" | 96" | NA | 96" | 96" | 96" | 96" |
| | | | | | Maximum Height | | | | | | |
| | | | | For Shade Widths to 66" | 120" | 120" | NA | 120" | 120" | 120" | 120" |
| | | | | For Shade Widths to 72" | 120" | 120" | NA | 120" | 120" | 120" | 120" |
| | | | | For Shade Widths to 78" | 120" | 120" | NA | 120" | 120" | 120" | 120" |
| | | | | For Shade Widths to 84" | 120" | 120" | NA | 120" | 120" | 120" | 120" |
| | | | | For Shade Widths to 90" | 108" | 108" | NA | 108" | 108" | 108" | 108" |
| | | | | For Shade Widths to 96" | 102" | 102" | NA | 102" | 102" | 102" | 102" |
| Sheerweave 7500R | 118" | NO | NO | Non-Railroaded | | | | | | | |
| | | | | Maximum Width | 102" | N/A | 102" | 102" | 102" | 102" | 102" |
| | | | | | Maximum Height | | | | | | |
| | | | | For Shade Widths to 66" | 144" | 144" | NA | 144" | 144" | 144" | 144" |
| | | | | For Shade Widths to 72" | 138" | 138" | NA | 138" | 138" | 138" | 138" |
| | | | | For Shade Widths to 78" | 126" | 126" | NA | 126" | 126" | 126" | 126" |
| | | | | For Shade Widths to 84" | 120" | 120" | NA | 120" | 120" | 120" | 120" |
| | | | | For Shade Widths to 90" | 108" | 108" | NA | 108" | 108" | 108" | 108" |
| | | | | For Shade Widths to 96" | 102" | 102" | NA | 102" | 102" | 102" | 102" |
| | | | | For Shade Widths to 102" | 84" | 84" | NA | 84" | 84" | 84" | 84" |
| Sheerweave 7600 | 118" | NO | NO | Non-Railroaded | | | | | | | |
| | | | | Maximum Width | 102" | 102" | 102" | 102" | 102" | 102" | 102" |
| | | | | | Maximum Height | | | | | | |
| | | | | For Shade Widths to 66" | 144" | 144" | 144" | 126" | 144" | 144" | 144" |
| | | | | For Shade Widths to 72" | 138" | 138" | 138" | 126" | 138" | 138" | 138" |
| | | | | For Shade Widths to 78" | 126" | 126" | 126" | 126" | 126" | 126" | 126" |
| | | | | For Shade Widths to 84" | 120" | 120" | 120" | 120" | 120" | 120" | 120" |
| | | | | For Shade Widths to 90" | 108" | 108" | 108" | 108" | 108" | 108" | 108" |
| | | | | For Shade Widths to 96" | 102" | 102" | 102" | 102" | 102" | 102" | 102" |
| | | | | For Shade Widths to 102" | 84" | 84" | 84" | 84" | 84" | 84" | 84" |
| Sheerweave 7650 | 118" | NO | NO | Non-Railroaded | | | | | | | |
| | | | | Maximum Width | 108" | 108" | 108" | 108" | 108" | 108" | 108" |
| | | | | | Maximum Height | | | | | | |
| | | | | For Shade Widths to 96" | 144" | 144" | 144" | 144" | 144" | 144" | 144" |
| | | | | For Shade Widths to 102" | 144" | 144" | 144" | 144" | 144" | 144" | 144" |
| | | | | For Shade Widths to 106" | 108 | 108" | 108" | 108" | 108" | 108" | 108" |
| | | | | For Shade Widths to 108" | 108" | 108" | 108" | 108" | 108" | 108" | 108" |
| Sheerweave 7700R | 118" | NO | NO | Non-Railroaded | | | | | | | |
| | | | | Maximum Width | 96" | 96" | 96" | 96" | 96" | 96" | 96" |
| | | | | | Maximum Height | | | | | | |
| | | | | For Shade Widths to 54" | 138" | 138" | 138" | 96" | 138" | 132" | 138" |
| | | | | For Shade Widths to 60" | 126" | 126" | 126" | 96" | 126" | 126" | 126" |
| | | | | For Shade Widths to 66" | 108" | 108" | 108" | 96" | 108" | 108" | 108" |
| | | | | For Shade Widths to 72" | 102" | 102" | 102" | 96" | 102" | 102" | 102" |
| | | | | For Shade Widths to 78" | 90" | 90" | 90" | 90" | 90" | 90" | 90" |
| | | | | For Shade Widths to 84" | 84" | 84" | 84" | 84" | 84" | 84" | 84" |
| | | | | For Shade Widths to 90" | 78" | 78" | 78" | 78" | 78" | 78" | 78" |
| | | | | For Shade Widths to 96" | 72" | 72" | 72" | 72" | 72" | 72" | 72" |
| Sheerweave 7750R | 118" | NO | NO | Non-Railroaded | | | | | | | |
| | | | | Maximum Width | 98" | 98" | 98" | 98" | 98" | 98" | 98" |
| | | | | | Maximum Height | | | | | | |
| | | | | For Shade Widths to 66" | 120" | 120" | 120" | 120" | 120" | 120" | 120" |
| | | | | For Shade Widths to 72" | 120" | 120" | 120" | 120" | 120" | 120" | 120" |
| | | | | For Shade Widths to 78" | 120" | 120" | 120" | 120" | 120" | 120" | 120" |
| | | | | For Shade Widths to 84" | 120" | 120" | 120" | 120" | 120" | 120" | 120" |
| | | | | For Shade Widths to 90" | 108" | 108" | 108" | 108" | 108" | 108" | 108" |
| | | | | For Shade Widths to 96" | 102" | 102" | 102" | 102" | 102" | 102" | 102" |
| | | | | For Shade Widths to 98" | 84" | 84" | 84" | 84" | 84" | 84" | 84" |
| Sorrento | 108" | NO | NO | Non-Railroaded | | | | | | | |
| | | | | Maximum Width | 108" | 96" | 96" | 108" | 108" | 108" | 108" |
| | | | | | Maximum Height | | | | | | |
| | | | | For Shade Widths to 96" | 144" | 144" | 144" | 108" | 144" | 144" | 144" |
| | | | | For Shade Widths to 102" | 144" | NA | NA | 108" | 144" | 144" | 144" |
| | | | | For Shade Widths to 108" | 108" | NA | NA | 108" | 108" | 108" | 108" |

# PRODUCT SIZE SPECIFICATIONS – REMOTELIFT™ ROLLUP 28 WIREFREE

**Minimum and Maximum Standards**
Please Note: Shade sizes that are wider than the fabric roll width indicated will be made with the fabric turned width for length (railroaded). The maximum width for non-railroaded shades is the roll width unless otherwise noted.

| Minimum: | Width | Height |
|---|---|---|
| R28WF | 17" | 12" |

Fabrics turned width for length will have a visible seam when fabricated longer than their maximum roll width less 10". Fabrics turned width for length may have an edge curl. This is not considered a defect in the product.

| Material Name | Roll Width | Railroad Option | Splice /Seam | | RemoteLift Shade without Top Treatment | RemoteLift with Deluxe Valance | RemoteLift with Fabric Valance | RemoteLift with Medium Cassette | RemoteLift with Large Cassette | RemoteLift with 3" Fascia | RemoteLift with 4" Fascia and Pocket Headrail |
|---|---|---|---|---|---|---|---|---|---|---|---|
| Sunscreen (SW) 7000 | 118" | YES | YES | Non-Railroaded | | | | | | | |
| | | | | Maximum Width | 96" | 96" | 96" | 96" | 96" | 96" | 96" |
| | | | | | Maximum Height | | | | | | |
| | | | | For Shade Widths to 60" | 126" | 126" | 126" | 96" | 126" | 126" | 126" |
| | | | | For Shade Widths to 72" | 102" | 102" | 102" | 96" | 102" | 102" | 102" |
| | | | | For Shade Widths to 78" | 90" | 90" | 90" | 90" | 90" | 90" | 90" |
| | | | | For Shade Widths to 84" | 84" | 84" | 84" | 84" | 84" | 84" | 84" |
| | | | | For Shade Widths to 90" | 78" | 78" | 78" | 78" | 78" | 78" | 78" |
| | | | | For Shade Widths to 96" | 72" | 72" | 72" | 72" | 72" | 72" | 72" |
| | | | | Railroaded | | | | | | | |
| | | | | Maximum Width | 96" | 96" | 96" | 96" | 96" | 96" | 96" |
| | | | | | Maximum Height | | | | | | |
| | | | | For Shade Widths to 60" | 126" | 126" | 126" | 96" | 126" | 126" | 126" |
| | | | | For Shade Widths to 72" | 102" | 102" | 102" | 96" | 102" | 102" | 102" |
| | | | | For Shade Widths to 78" | 90" | 90" | 90" | 90" | 90" | 90" | 90" |
| | | | | For Shade Widths to 84" | 84" | 84" | 84" | 84" | 84" | 84" | 84" |
| | | | | For Shade Widths to 90" | 78" | 78" | 78" | 78" | 78" | 78" | 78" |
| | | | | For Shade Widths to 96" | 72" | 72" | 72" | 72" | 72" | 72" | 72" |
| Tundra | 94" | NO | NO | Non-Railroaded | | | | | | | |
| | | | | Maximum Width | 94" | 84" | 84" | 94" | 94" | 94" | 94" |
| | | | | | Maximum Height | | | | | | |
| | | | | For Shade Widths to 84" | 144" | 144" | 144" | 144" | 144" | 144" | 144" |
| | | | | For Shade Widths to 90" | 144" | N/A | N/A | 144" | 144" | 144" | 144" |
| | | | | For Shade Widths to 94" | 144" | N/A | N/A | 144" | 144" | 144" | 144" |
| Tundra Blackout | 94" | NO | NO | Non-Railroaded | | | | | | | |
| | | | | Maximum Width | 94" | 84" | 84" | 94" | 94" | 94" | 94" |
| | | | | | Maximum Height | | | | | | |
| | | | | For Shade Widths to 66" | 120" | 120" | 120" | 120" | 120" | 120" | 120" |
| | | | | For Shade Widths to 72" | 120" | 120" | 120" | 120" | 120" | 120" | 120" |
| | | | | For Shade Widths to 78" | 120" | 120" | 120" | 120" | 120" | 120" | 120" |
| | | | | For Shade Widths to 84" | 120" | 120" | 120" | 120" | 120" | 120" | 120" |
| | | | | For Shade Widths to 90" | 108" | N/A | N/A | 108" | 108" | 108" | 108" |
| | | | | For Shade Widths to 94" | 102" | N/A | N/A | 102" | 102" | 102" | 102" |
| Uptown *(R79_02)* | 78" | YES | NO | Non-Railroaded | | | | | | | |
| | | | | Maximum Width | 78" | 66" | 66" | 78" | 78" | 78" | 78" |
| | | | | | Maximum Height | | | | | | |
| | | | | For Shade Widths to 66" | 144" | 144" | 144" | 144" | 144" | 144" | 144" |
| | | | | For Shade Widths to 78" | 144" | NA | NA | 144" | 144" | 144" | 144" |
| | | | | Railroaded | | | | | | | |
| | | | | Maximum Width | 114" | 114" | 114" | 114" | 114" | 114" | 114" |
| | | | | | Maximum Height | | | | | | |
| | | | | For Shade Widths to 114" | 66" | 66" | 66" | 66" | 66" | 66" | 66" |
| Uptown Room Darkening *(R79_01)* | 78" | YES | NO | Non-Railroaded | | | | | | | |
| | | | | Maximum Width | 78" | 66" | 66" | 78" | 78" | 78" | 78" |
| | | | | | Maximum Height | | | | | | |
| | | | | For Shade Widths to 66" | 144" | 144" | 144" | 144" | 144" | 144" | 144" |
| | | | | For Shade Widths to 72" | 138" | NA | NA | 138" | 138" | 138" | 138" |
| | | | | For Shade Widths to 78" | 126" | NA | NA | 126" | 126" | 126" | 126" |
| | | | | Railroaded | | | | | | | |
| | | | | Maximum Width | 108" | 108" | 108" | 108" | 108" | 108" | 108" |
| | | | | | Maximum Height | | | | | | |
| | | | | For Shade Widths to 108" | 66" | 66" | 66" | 66" | 66" | 66" | 66" |

# PRODUCT SIZE SPECIFICATIONS – REMOTELIFT™ ROLLUP 28 WIREFREE

**Minimum and Maximum Standards**
Please Note: Shade sizes that are wider than the fabric roll width indicated will be made with the fabric turned width for length (railroaded). The maximum width for non-railroaded shades is the roll width unless otherwise noted.

| Minimum: | Width | Height |
|---|---|---|
| R28WF | 17" | 12" |

Fabrics turned width for length will have a visible seam when fabricated longer than their maximum roll width less 10". Fabrics turned width for length may have an edge curl. This is not considered a defect in the product.

| Material Name | Roll Width | Railroad Option | Splice /Seam | | RemoteLift Shade without Top Treatment | RemoteLift with Deluxe Valance | RemoteLift with Fabric Valance | RemoteLift with Medium Cassette | RemoteLift with Large Cassette | RemoteLift with 3" Fascia | RemoteLift with 4" Fascia and Pocket Headrail |
|---|---|---|---|---|---|---|---|---|---|---|---|
| World Textures 1 | 78" | YES | YES | Non-Railroaded | | | | | | | |
| | | | | Maximum Width | 78" | 66" | 66" | 78" | 78" | 78" | 78" |
| | | | | | Maximum Height | | | | | | |
| | | | | For Shade Widths to 66" | 144" | 144" | 144" | 126" | 144" | 144" | 144" |
| | | | | For Shade Widths to 72" | 138" | NA | NA | 126" | 138" | 138" | 138" |
| | | | | For Shade Widths to 78" | 126" | NA | NA | 126" | 126" | 126" | 126" |
| | | | | Railroaded | | | | | | | |
| | | | | Maximum Width | 102" | 102" | 102" | 102" | 102" | 102" | 102" |
| | | | | | Maximum Height | | | | | | |
| | | | | For Shade Widths to 66" | 144" | 144" | 144" | 126" | 144" | 144" | 144" |
| | | | | For Shade Widths to 72" | 138" | 138" | 138" | 126" | 138" | 138" | 138" |
| | | | | For Shade Widths to 78" | 126" | 126" | 126" | 126" | 126" | 126" | 126" |
| | | | | For Shade Widths to 84" | 120" | 120" | 120" | 108" | 120" | 120" | 120" |
| | | | | For Shade Widths to 90" | 108" | 108" | 108" | 108" | 108" | 108" | 108" |
| | | | | For Shade Widths to 96" | 102" | 102" | 102" | 102" | 102" | 102" | 102" |
| | | | | For Shade Widths to 102" | 84" | 84" | 84" | 84" | 84" | 84" | 84" |
| World Textures 1 Blackout | 78" | YES | YES | Non-Railroaded | | | | | | | |
| | | | | Maximum Width | 78" | 66" | 66" | 78" | 78" | 78" | 78" |
| | | | | | Maximum Height | | | | | | |
| | | | | For Shade Widths to 66" | 144" | 138" | 138" | 108" | 144" | 144" | 144" |
| | | | | For Shade Widths to 72" | 138" | NA | NA | 108" | 138" | 138" | 138" |
| | | | | For Shade Widths to 78" | 126" | NA | NA | 108" | 126" | 126" | 126" |
| | | | | Railroaded | | | | | | | |
| | | | | Maximum Width | 102" | 102" | 102" | 102" | 102" | 102" | 102" |
| | | | | | Maximum Height | | | | | | |
| | | | | For Shade Widths to 66" | 144" | 144" | 144" | 108" | 144" | 144" | 144" |
| | | | | For Shade Widths to 72" | 138" | 138" | 138" | 108" | 138" | 138" | 138" |
| | | | | For Shade Widths to 78" | 126" | 126" | 126" | 108" | 126" | 126" | 126" |
| | | | | For Shade Widths to 84" | 120" | 120" | 120" | 108" | 120" | 120" | 120" |
| | | | | For Shade Widths to 90" | 108" | 108" | 108" | 108" | 108" | 108" | 108" |
| | | | | For Shade Widths to 96" | 102" | 102" | 102" | 102" | 102" | 102" | 102" |
| | | | | For Shade Widths to 102" | 84" | 84" | 84" | 84" | 84" | 84" | 84" |
| World Textures 2 | 80" | YES | YES | Non-Railroaded | | | | | | | |
| | | | | Maximum Width | 80" | 70" | 70" | 80" | 80" | 80" | 80" |
| | | | | | Maximum Height | | | | | | |
| | | | | For Shade Widths to 66" | 144" | 138" | 138" | 84" | 138" | 120" | 144" |
| | | | | For Shade Widths to 70" | 138" | 138" | 138" | 84" | 138" | 120" | 138" |
| | | | | For Shade Widths to 72" | 138" | NA | NA | 84" | 138" | 120" | 138" |
| | | | | For Shade Widths to 80" | 120" | NA | NA | 84" | 120" | 120" | 120" |
| | | | | Railroaded | | | | | | | |
| | | | | Maximum Width | 102" | 102" | 102" | 102" | 102" | 102" | 102" |
| | | | | | Maximum Height | | | | | | |
| | | | | For Shade Widths to 66" | 144" | 138" | 138" | 84" | 138" | 120" | 144" |
| | | | | For Shade Widths to 72" | 138" | 138" | 138" | 84" | 138" | 120" | 138" |
| | | | | For Shade Widths to 84" | 120" | 120" | 120" | 84" | 120" | 120" | 120" |
| | | | | For Shade Widths to 90" | 108" | 108" | 108" | 84" | 108" | 108" | 108" |
| | | | | For Shade Widths to 96" | 102" | 102" | 102" | 84" | 102" | 102" | 102" |
| | | | | For Shade Widths to 102" | 84" | 84" | 84" | 84" | 84" | 84" | 84" |
| World Textures 2 Blackout | 80" | YES | YES | Non-Railroaded | | | | | | | |
| | | | | Maximum Width | 80" | 70" | 70" | 80" | 80" | 80" | 80" |
| | | | | | Maximum Height | | | | | | |
| | | | | For Shade Widths to 66" | 144" | 144" | 144" | 144" | 144" | 144" | 144" |
| | | | | For Shade Widths to 70" | 138" | 138" | 138" | 138" | 138" | 138" | 138" |
| | | | | For Shade Widths to 72" | 138" | NA | NA | 138" | 138" | 138" | 138" |
| | | | | For Shade Widths to 80" | 120" | NA | NA | 120" | 120" | 120" | 120" |
| | | | | Railroaded | | | | | | | |
| | | | | Maximum Width | 102" | 102" | 102" | 102" | 102" | 102" | 102" |
| | | | | | Maximum Height | | | | | | |
| | | | | For Shade Widths to 66" | 144" | 144" | 144" | 144" | 144" | 144" | 144" |
| | | | | For Shade Widths to 72" | 138" | 138" | 138" | 138" | 138" | 138" | 138" |
| | | | | For Shade Widths to 84" | 120" | 120" | 120" | 120" | 120" | 120" | 120" |
| | | | | For Shade Widths to 90" | 108" | 108" | 108" | 108" | 108" | 108" | 108" |
| | | | | For Shade Widths to 96" | 102" | 102" | 102" | 102" | 102" | 102" | 102" |
| | | | | For Shade Widths to 102" | 84" | 84" | 84" | 84" | 84" | 84" | 84" |

**Minimum and Maximum Standards**

Please Note: Shade sizes that are wider than the fabric roll width indicated will be made with the fabric turned width for length (railroaded). The maximum width for non-railroaded shades is the roll width unless otherwise noted.

| Minimum: | Width | Height |
|---|---|---|
| ST30WF | 29" | 12" |

Fabrics turned width for length will have a visible seam when fabricated longer than their maximum roll width less 10". Fabrics turned width for length may have an edge curl. This is not considered a defect in the product.

| Material Name | Roll Width | Railroad Option | Splice /Seam | | Motorized Shade without Top Treament | Motorized Shade Deluxe Valance | Motorized Shade Fabric Valance | Motorized Shade with Medium Cassette | Motorized Shade with Large Cassette | Motorized Shade with 3" Fascia | Motorized Shade with 4" Fascia | Motorized Shade with Pocket Headrail |
|---|---|---|---|---|---|---|---|---|---|---|---|---|
| 1% E Screen | 122" | YES | YES | Non-Railroaded | | | | | | | | |
| | | | | Maximum Width | 102" | 102" | 102" | 102" | 102" | 102" | 102" | 102" |
| | | | | | Maximum Height | | | | | | | |
| | | | | For Shade Widths to 84" | 144" | 144" | 144" | 138" | 144" | 144" | 144" | 144" |
| | | | | For Shade Widths to 90" | 138" | 138" | 138" | 138" | 138" | 138" | 138" | 138" |
| | | | | For Shade Widths to 96" | 108" | 108" | 108" | 108" | 108" | 108" | 108" | 108" |
| | | | | For Shade Widths to 102" | 84" | 84" | 84" | 84" | 84" | 84" | 84" | 84" |
| | | | | Railroaded | | | | | | | | |
| | | | | Maximum Width | 102" | 102" | 102" | 102" | 102" | 102" | 102" | 102" |
| | | | | | Maximum Height | | | | | | | |
| | | | | For Shade Widths to 84" | 144" | 144" | 144" | 138" | 144" | 144" | 144" | 144" |
| | | | | For Shade Widths to 90" | 138" | 138" | 138" | 138" | 138" | 138" | 138" | 138" |
| | | | | For Shade Widths to 96" | 108" | 108" | 108" | 108" | 108" | 108" | 108" | 108" |
| | | | | For Shade Widths to 102" | 84" | 84" | 84" | 84" | 84" | 84" | 84" | 84" |
| 1% Sheerweave 2500 | 126" | YES | YES | Non-Railroaded | | | | | | | | |
| | | | | Maximum Width | 96" | 96" | 96" | 96" | 96" | 96" | 96" | 96" |
| | | | | | Maximum Height | | | | | | | |
| | | | | For Shade Widths to 78" | 144" | 144" | 144" | 114" | 144" | 144" | 144" | 144" |
| | | | | For Shade Widths to 84" | 126" | 126" | 126" | 114" | 126" | 126" | 126" | 126" |
| | | | | For Shade Widths to 90" | 96" | 96" | 96" | 96" | 96" | 96" | 96" | 96" |
| | | | | For Shade Widths to 96" | 78" | 78" | 78" | 78" | 78" | 78" | 78" | 78" |
| | | | | Railroaded | | | | | | | | |
| | | | | Maximum Width | 96" | 96" | 96" | 96" | 96" | 96" | 96" | 96" |
| | | | | | Maximum Height | | | | | | | |
| | | | | For Shade Widths to 78" | 144" | 144" | 144" | 114" | 144" | 144" | 144" | 144" |
| | | | | For Shade Widths to 84" | 126" | 126" | 126" | 114" | 126" | 126" | 126" | 126" |
| | | | | For Shade Widths to 90" | 96" | 96" | 96" | 96" | 96" | 96" | 96" | 96" |
| | | | | For Shade Widths to 96" | 78" | 78" | 78" | 78" | 78" | 78" | 78" | 78" |
| 1% Sheerweave 2701 | 126" | YES | YES | Non-Railroaded | | | | | | | | |
| | | | | Maximum Width | 102" | 102" | 102" | 102" | 102" | 102" | 102" | 102" |
| | | | | | Maximum Height | | | | | | | |
| | | | | For Shade Widths to 72" | 144" | 144" | 144" | 138" | 144" | 144" | 144" | 144" |
| | | | | For Shade Widths to 84" | 126" | 126" | 126" | 126" | 126" | 126" | 126" | 126" |
| | | | | For Shade Widths to 90" | 96" | 96" | 96" | 96" | 96" | 96" | 96" | 96" |
| | | | | For Shade Widths to 96" | 78" | 78" | 78" | 78" | 78" | 78" | 78" | 78" |
| | | | | For Shade Widths over 96" | 60" | 60" | 60" | 60" | 60" | 60" | 60" | 60" |
| | | | | Railroaded | | | | | | | | |
| | | | | Maximum Width | 102" | 102" | 102" | 102" | 102" | 102" | 102" | 102" |
| | | | | | Maximum Height | | | | | | | |
| | | | | For Shade Widths to 72" | 144" | 144" | 144" | 138" | 144" | 144" | 144" | 144" |
| | | | | For Shade Widths to 84" | 126" | 126" | 126" | 126" | 126" | 126" | 126" | 126" |
| | | | | For Shade Widths to 90" | 96" | 96" | 96" | 96" | 96" | 96" | 96" | 96" |
| | | | | For Shade Widths to 96" | 78" | 78" | 78" | 78" | 78" | 78" | 78" | 78" |
| | | | | For Shade Widths over 96" | 60" | 60" | 60" | 60" | 60" | 60" | 60" | 60" |
| 1% Sheerweave 4901 | 98" | NO | NO | Non-Railroaded | | | | | | | | |
| | | | | Maximum Width | 96" | 88" | 88" | 96" | 96" | 96" | 96" | 96" |
| | | | | | Maximum Height | | | | | | | |
| | | | | For Shade Widths to 54" | 144" | 144" | 144" | 96" | 144" | 126" | 144" | 144" |
| | | | | For Shade Widths to 60" | 144" | 144" | 144" | 96" | 144" | 126" | 144" | 144" |
| | | | | For Shade Widths to 66" | 144" | 144" | 144" | 96" | 144" | 126" | 144" | 144" |
| | | | | For Shade Widths to 72" | 144" | 144" | 144" | 96" | 144" | 126" | 144" | 144" |
| | | | | For Shade Widths to 78" | 144" | 144" | 144" | 96" | 144" | 126" | 144" | 144" |
| | | | | For Shade Widths to 84" | 126" | 126" | 126" | 96" | 126" | 126" | 126" | 126" |
| | | | | For Shade Widths to 88" | 96" | 96" | 96" | 96" | 96" | 96" | 96" | 96" |
| | | | | For Shade Widths to 90" | 96" | N/A | N/A | 96" | 96" | 96" | 96" | 96" |
| | | | | For Shade Widths to 96" | 78" | N/A | N/A | 78" | 78" | 78" | 78" | 78" |
| 1% Sheerweave 5000 | 98" | NO | NO | Non-Railroaded | | | | | | | | |
| | | | | Maximum Width | 96" | 86" | 86" | 96" | 96" | 96" | 96" | 96" |
| | | | | | Maximum Height | | | | | | | |
| | | | | For Shade Widths to 78" | 144" | 84" | 84" | 55" | 84" | 72" | 144" | 126" |
| | | | | For Shade Widths to 84" | 126" | 84" | 84" | 55" | 84" | 72" | 126" | 126" |
| | | | | For Shade Widths to 86" | 96" | 84" | 84" | 55" | 84" | 72" | 96" | 96" |
| | | | | For Shade Widths to 90" | 96" | NA | NA | 55" | 84" | 72" | 96" | 96" |
| | | | | For Shade Widths to 96" | 78" | NA | NA | 55" | 78" | 72" | 78" | 78" |

**Minimum and Maximum Standards**

Please Note: Shade sizes that are wider than the fabric roll width indicated will be made with the fabric turned width for length (railroaded). The maximum width for non-railroaded shades is the roll width unless otherwise noted.

| Minimum: | Width | Height |
|---|---|---|
| ST30WF | 29" | 12" |

Fabrics turned width for length will have a visible seam when fabricated longer than their maximum roll width less 10". Fabrics turned width for length may have an edge curl. This is not considered a defect in the product.

| Material Name | Roll Width | Railroad Option | Splice /Seam | | Motorized Shade without Top Treament | Motorized Shade Deluxe Valance | Motorized Shade Fabric Valance | Motorized Shade with Medium Cassette | Motorized Shade with Large Cassette | Motorized Shade with 3" Fascia | Motorized Shade with 4" Fascia | Motorized Shade with Pocket Headrail |
|---|---|---|---|---|---|---|---|---|---|---|---|---|
| 1% Toka | 118" | YES | YES | Non-Railroaded | | | | | | | | |
| | | | | Maximum Width | 102" | 102" | 102" | 102" | 102" | 102" | 102" | 102" |
| | | | | | Maximum Height | | | | | | | |
| | | | | For Shade Widths to 72" | 144" | 144" | 144" | 96" | 144" | 132" | 144" | 144" |
| | | | | For Shade Widths to 84" | 126" | 126" | 126" | 96" | 126" | 126" | 126" | 126" |
| | | | | For Shade Widths to 90" | 96" | 96" | 96" | 96" | 96" | 96" | 96" | 96" |
| | | | | For Shade Widths to 96" | 78" | 78" | 78" | 78" | 78" | 78" | 78" | 78" |
| | | | | For Shade Widths over 96" | 60" | 60" | 60" | 60" | 60" | 60" | 60" | 60" |
| | | | | Railroaded | | | | | | | | |
| | | | | Maximum Width | 102" | 102" | 102" | 102" | 102" | 102" | 102" | 102" |
| | | | | | Maximum Height | | | | | | | |
| | | | | For Shade Widths to 72" | 144" | 144" | 144" | 96" | 144" | 132" | 144" | 144" |
| | | | | For Shade Widths to 84" | 126" | 126" | 126" | 96" | 126" | 126" | 126" | 126" |
| | | | | For Shade Widths to 90" | 96" | 96" | 96" | 96" | 96" | 96" | 96" | 96" |
| | | | | For Shade Widths to 96" | 78" | 78" | 78" | 78" | 78" | 78" | 78" | 78" |
| | | | | For Shade Widths over 96" | 60" | 60" | 60" | 60" | 60" | 60" | 60" | 60" |
| 3% E Screen | 122" | YES | YES | Non-Railroaded | | | | | | | | |
| | | | | Maximum Width | 102" | 102" | 102" | 102" | 102" | 102" | 102" | 102" |
| | | | | | Maximum Height | | | | | | | |
| | | | | For Shade Widths to 84" | 144" | 144" | 144" | 144" | 144" | 144" | 144" | 144" |
| | | | | For Shade Widths to 90" | 138" | 138" | 138" | 138" | 138" | 138" | 138" | 138" |
| | | | | For Shade Widths to 96" | 108" | 108" | 108" | 108" | 108" | 108" | 108" | 108" |
| | | | | For Shade Widths to 102" | 84" | 84" | 84" | 84" | 84" | 84" | 84" | 84" |
| | | | | Railroaded | | | | | | | | |
| | | | | Maximum Width | 102" | 102" | 102" | 102" | 102" | 102" | 102" | 102" |
| | | | | | Maximum Height | | | | | | | |
| | | | | For Shade Widths to 84" | 144" | 144" | 144" | 144" | 144" | 144" | 144" | 144" |
| | | | | For Shade Widths to 90" | 138" | 138" | 138" | 138" | 138" | 138" | 138" | 138" |
| | | | | For Shade Widths to 96" | 108" | 108" | 108" | 108" | 108" | 108" | 108" | 108" |
| | | | | For Shade Widths to 102" | 84" | 84" | 84" | 84" | 84" | 84" | 84" | 84" |
| 3% M Screen | 122" | YES | YES | Non-Railroaded | | | | | | | | |
| | | | | Maximum Width | 108" | 108" | 108" | 108" | 108" | 108" | 108" | 108" |
| | | | | | Maximum Height | | | | | | | |
| | | | | For Shade Widths to 84" | 144" | 144" | 144" | 144" | 144" | 144" | 144" | 144" |
| | | | | For Shade Widths to 90" | 138" | 138" | 138" | 138" | 138" | 138" | 138" | 138" |
| | | | | For Shade Widths to 96" | 108" | 108" | 108" | 108" | 108" | 108" | 108" | 108" |
| | | | | For Shade Widths over 96" | 66" | 66" | 66" | 66" | 66" | 66" | 66" | 66" |
| | | | | Railroaded | | | | | | | | |
| | | | | Maximum Width | 108" | 108" | 108" | 108" | 108" | 108" | 108" | 108" |
| | | | | | Maximum Height | | | | | | | |
| | | | | For Shade Widths to 84" | 144" | 144" | 144" | 144" | 144" | 144" | 144" | 144" |
| | | | | For Shade Widths to 90" | 138" | 138" | 138" | 138" | 138" | 138" | 138" | 138" |
| | | | | For Shade Widths to 96" | 108" | 108" | 108" | 108" | 108" | 108" | 108" | 108" |
| | | | | For Shade Widths over 96" | 66" | 66" | 66" | 66" | 66" | 66" | 66" | 66" |
| 3% Sheerweave 2410 | 126" | YES | YES | Non-Railroaded | | | | | | | | |
| | | | | Maximum Width | 102" | 102" | 102" | 102" | 102" | 102" | 102" | 102" |
| | | | | | Maximum Height | | | | | | | |
| | | | | For Shade Widths to 72" | 144" | 144" | 144" | 144" | 144" | 144" | 144" | 144" |
| | | | | For Shade Widths to 84" | 126" | 126" | 126" | 126" | 126" | 126" | 126" | 126" |
| | | | | For Shade Widths to 90" | 96" | 96" | 96" | 96" | 96" | 96" | 96" | 96" |
| | | | | For Shade Widths to 96" | 78" | 78" | 78" | 78" | 78" | 78" | 78" | 78" |
| | | | | For Shade Widths over 96" | 60" | 60" | 60" | 60" | 60" | 60" | 60" | 60" |
| | | | | Railroaded | | | | | | | | |
| | | | | Maximum Width | 102" | 102" | 102" | 102" | 102" | 102" | 102" | 102" |
| | | | | | Maximum Height | | | | | | | |
| | | | | For Shade Widths to 72" | 144" | 144" | 144" | 144" | 144" | 144" | 144" | 144" |
| | | | | For Shade Widths to 84" | 126" | 126" | 126" | 126" | 126" | 126" | 126" | 126" |
| | | | | For Shade Widths to 90" | 96" | 96" | 96" | 96" | 96" | 96" | 96" | 96" |
| | | | | For Shade Widths to 96" | 78" | 78" | 78" | 78" | 78" | 78" | 78" | 78" |
| | | | | For Shade Widths over 96" | 60" | 60" | 60" | 60" | 60" | 60" | 60" | 60" |

**Minimum and Maximum Standards**

Please Note: Shade sizes that are wider than the fabric roll width indicated will be made with the fabric turned width for length (railroaded). The maximum width for non-railroaded shades is the roll width unless otherwise noted.

| Minimum: | Width | Height |
|---|---|---|
| ST30WF | 29" | 12" |

Fabrics turned width for length will have a visible seam when fabricated longer than their maximum roll width less 10". Fabrics turned width for length may have an edge curl. This is not considered a defect in the product.

| Material Name | Roll Width | Railroad Option | Splice /Seam | | Motorized Shade without Top Treament | Motorized Shade Deluxe Valance | Motorized Shade Fabric Valance | Motorized Shade with Medium Cassette | Motorized Shade with Large Cassette | Motorized Shade with 3" Fascia | Motorized Shade with 4" Fascia | Motorized Shade with Pocket Headrail |
|---|---|---|---|---|---|---|---|---|---|---|---|---|
| 3% Sheerweave 2703 | 126" | YES | YES | Non-Railroaded | | | | | | | | |
| | | | | Maximum Width | 96" | 96" | 96" | 96" | 96" | 96" | 96" | 96" |
| | | | | | Maximum Height | | | | | | | |
| | | | | For Shade Widths to 54" | 144" | 144" | 144" | 96" | 144" | 126" | 144" | 144" |
| | | | | For Shade Widths to 60" | 144" | 144" | 144" | 96" | 144" | 126" | 144" | 144" |
| | | | | For Shade Widths to 66" | 144" | 144" | 144" | 96" | 144" | 126" | 144" | 144" |
| | | | | For Shade Widths to 72" | 144" | 144" | 144" | 96" | 144" | 126" | 144" | 144" |
| | | | | For Shade Widths to 78" | 144" | 144" | 144" | 96" | 144" | 126" | 144" | 144" |
| | | | | For Shade Widths to 84" | 126" | 126" | 126" | 96" | 126" | 126" | 126" | 126" |
| | | | | For Shade Widths to 90" | 96" | 96" | 96" | 96" | 96" | 96" | 96" | 96" |
| | | | | For Shade Widths to 96" | 78" | 78" | 78" | 78" | 78" | 78" | 78" | 78" |
| | | | | Railroaded | | | | | | | | |
| | | | | Maximum Width | 96" | 96" | 96" | 96" | 96" | 96" | 96" | 96" |
| | | | | | Maximum Height | | | | | | | |
| | | | | For Shade Widths to 54" | 144" | 144" | 144" | 96" | 144" | 126" | 144" | 144" |
| | | | | For Shade Widths to 60" | 144" | 144" | 144" | 96" | 144" | 126" | 144" | 144" |
| | | | | For Shade Widths to 66" | 144" | 144" | 144" | 96" | 144" | 126" | 144" | 144" |
| | | | | For Shade Widths to 72" | 144" | 144" | 144" | 96" | 144" | 126" | 144" | 144" |
| | | | | For Shade Widths to 78" | 144" | 144" | 144" | 96" | 144" | 126" | 144" | 144" |
| | | | | For Shade Widths to 84" | 126" | 126" | 126" | 96" | 126" | 126" | 126" | 126" |
| | | | | For Shade Widths to 90" | 96" | 96" | 96" | 96" | 96" | 96" | 96" | 96" |
| | | | | For Shade Widths to 96" | 78" | 78" | 78" | 78" | 78" | 78" | 78" | 78" |
| 3% Sheerweave 4400 | 126" | YES | YES | Non-Railroaded | | | | | | | | |
| | | | | Maximum Width | 102" | 102" | 102" | 102" | 102" | 102" | 102" | 102" |
| | | | | | Maximum Height | | | | | | | |
| | | | | For Shade Widths to 78" | 144" | 120" | 120" | 78" | 120" | 108" | 144" | 144" |
| | | | | For Shade Widths to 84" | 126" | 120" | 120" | 78" | 120" | 108" | 126" | 126" |
| | | | | For Shade Widths to 90" | 96" | 96" | 96" | 78" | 96" | 96" | 96" | 96" |
| | | | | For Shade Widths to 96" | 78" | 78" | 78" | 78" | 78" | 78" | 78" | 78" |
| | | | | For Shade Widths over 96" | 60" | 60" | 60" | 60" | 60" | 60" | 60" | 60" |
| | | | | Railroaded | | | | | | | | |
| | | | | Maximum Width | 102" | 102" | 102" | 102" | 102" | 102" | 102" | 102" |
| | | | | | Maximum Height | | | | | | | |
| | | | | For Shade Widths to 78" | 144" | 120" | 120" | 78" | 120" | 108" | 144" | 144" |
| | | | | For Shade Widths to 84" | 126" | 120" | 120" | 78" | 120" | 108" | 126" | 126" |
| | | | | For Shade Widths to 90" | 96" | 96" | 96" | 78" | 96" | 96" | 96" | 96" |
| | | | | For Shade Widths to 96" | 78" | 78" | 78" | 78" | 78" | 78" | 78" | 78" |
| | | | | For Shade Widths over 96" | 60" | 60" | 60" | 60" | 60" | 60" | 60" | 60" |
| 3% Sheerweave 4600 | 126" | YES | YES | Non-Railroaded | | | | | | | | |
| | | | | Maximum Width | 96" | 96" | 96" | 96" | 96" | 96" | 96" | 96" |
| | | | | | Maximum Height | | | | | | | |
| | | | | For Shade Widths to 54" | 120" | 120" | 120" | 84" | 120" | 114" | 120" | 120" |
| | | | | For Shade Widths to 60" | 120" | 120" | 120" | 84" | 120" | 114" | 120" | 120" |
| | | | | For Shade Widths to 66" | 120" | 120" | 120" | 84" | 120" | 114" | 120" | 120" |
| | | | | For Shade Widths to 72" | 120" | 120" | 120" | 84" | 120" | 114" | 120" | 120" |
| | | | | For Shade Widths to 78" | 120" | 120" | 120" | 84" | 120" | 114" | 120" | 120" |
| | | | | For Shade Widths to 84" | 120" | 120" | 120" | 84" | 120" | 114" | 120" | 120" |
| | | | | For Shade Widths to 90" | 96" | 96" | 96" | 84" | 96" | 96" | 96" | 96" |
| | | | | For Shade Widths to 96" | 78" | 78" | 78" | 78" | 78" | 78" | 78" | 78" |
| | | | | Railroaded | | | | | | | | |
| | | | | Maximum Width | 96" | 96" | 96" | 96" | 96" | 96" | 96" | 96" |
| | | | | | Maximum Height | | | | | | | |
| | | | | For Shade Widths to 54" | 120" | 120" | 120" | 84" | 120" | 114" | 120" | 120" |
| | | | | For Shade Widths to 60" | 120" | 120" | 120" | 84" | 120" | 114" | 120" | 120" |
| | | | | For Shade Widths to 66" | 120" | 120" | 120" | 84" | 120" | 114" | 120" | 120" |
| | | | | For Shade Widths to 72" | 120" | 120" | 120" | 84" | 120" | 114" | 120" | 120" |
| | | | | For Shade Widths to 78" | 120" | 120" | 120" | 84" | 120" | 114" | 120" | 120" |
| | | | | For Shade Widths to 84" | 120" | 120" | 120" | 84" | 120" | 114" | 120" | 120" |
| | | | | For Shade Widths to 90" | 96" | 96" | 96" | 84" | 96" | 96" | 96" | 96" |
| | | | | For Shade Widths to 96" | 78" | 78" | 78" | 78" | 78" | 78" | 78" | 78" |
| 3% Sheerweave 4903 | 98" | NO | NO | Non-Railroaded | | | | | | | | |
| | | | | Maximum Width | 96" | 88" | 88" | 96" | 96" | 96" | 96" | 96" |
| | | | | | Maximum Height | | | | | | | |
| | | | | For Shade Widths to 54" | 144" | 144" | 144" | 90" | 144" | 126" | 144" | 144" |
| | | | | For Shade Widths to 60" | 144" | 144" | 144" | 90" | 144" | 126" | 144" | 144" |
| | | | | For Shade Widths to 66" | 144" | 144" | 144" | 90" | 144" | 126" | 144" | 144" |
| | | | | For Shade Widths to 72" | 144" | 144" | 144" | 90" | 144" | 126" | 144" | 144" |
| | | | | For Shade Widths to 78" | 144" | 144" | 144" | 90" | 144" | 126" | 144" | 144" |
| | | | | For Shade Widths to 84" | 126" | 126" | 126" | 90" | 126" | 126" | 126" | 126" |
| | | | | For Shade Widths to 88" | 96" | 96" | 96" | 90" | 96" | 96" | 96" | 96" |
| | | | | For Shade Widths to 90" | 96" | N/A | N/A | 90" | 96" | 96" | 96" | 96" |
| | | | | For Shade Widths to 96" | 78" | N/A | N/A | 78" | 78" | 78" | 78" | 78" |

**Minimum and Maximum Standards**

Please Note: Shade sizes that are wider than the fabric roll width indicated will be made with the fabric turned width for length (railroaded). The maximum width for non-railroaded shades is the roll width unless otherwise noted.

| Minimum: | Width | Height |
|---|---|---|
| ST30WF | 29" | 12" |

Fabrics turned width for length will have a visible seam when fabricated longer than their maximum roll width less 10". Fabrics turned width for length may have an edge curl. This is not considered a defect in the product.

| Material Name | Roll Width | Railroad Option | Splice /Seam | | Motorized Shade without Top Treament | Motorized Shade Deluxe Valance | Motorized Shade Fabric Valance | Motorized Shade with Medium Cassette | Motorized Shade with Large Cassette | Motorized Shade with 3" Fascia | Motorized Shade with 4" Fascia | Motorized Shade with Pocket Headrail |
|---|---|---|---|---|---|---|---|---|---|---|---|---|
| **3% Sheerweave 5000** *(R07_02, 04, 05, 07, 10)* | 98" | NO | NO | **Non-Railroaded** | | | | | | | | |
| | | | | **Maximum Width** | 96" | 86" | 86" | 96" | 96" | 96" | 96" | 96" |
| | | | | | Maximum Height | | | | | | | |
| | | | | For Shade Widths to 78" | 144" | 72" | 72" | 42" | 72" | 60" | 144" | 108" |
| | | | | For Shade Widths to 84" | 126" | 72" | 72" | 42" | 72" | 60" | 126" | 108" |
| | | | | For Shade Widths to 86" | 96" | 72" | 72" | 42" | 72" | 60" | 96" | 96" |
| | | | | For Shade Widths to 90" | 96" | NA | NA | 42" | 72" | 60" | 96" | 96" |
| | | | | For Shade Widths over 90" | 78" | NA | NA | 42" | 72" | 60" | 78" | 78" |
| **3% Sheerweave 5000** *(R07_R11, R89, R90, R93, U10, U11)* | 98" | NO | NO | **Non-Railroaded** | | | | | | | | |
| | | | | **Maximum Width** | 96" | 88" | 88" | 96" | 96" | 96" | 96" | 96" |
| | | | | | Maximum Height | | | | | | | |
| | | | | For Shade Widths to 54" | 144" | 78" | 78" | 48" | 78" | 72" | 144" | 114" |
| | | | | For Shade Widths to 60" | 144" | 78" | 78" | 48" | 78" | 72" | 144" | 114" |
| | | | | For Shade Widths to 66" | 144" | 78" | 78" | 48" | 78" | 72" | 144" | 114" |
| | | | | For Shade Widths to 72" | 144" | 78" | 78" | 48" | 78" | 72" | 144" | 114" |
| | | | | For Shade Widths to 78" | 144" | 78" | 78" | 48" | 78" | 72" | 144" | 114" |
| | | | | For Shade Widths to 84" | 126" | 78" | 78" | 48" | 78" | 72" | 126" | 114" |
| | | | | For Shade Widths to 88" | 96" | 78" | 78" | 48" | 78" | 72" | 96" | 96" |
| | | | | For Shade Widths to 90" | 96" | NA | NA | 48" | 78" | 72" | 96" | 96" |
| | | | | For Shade Widths over 90" | 78" | NA | NA | 48" | 78" | 72" | 78" | 78" |
| **3% T Screen** | 98" | YES | NO | **Non-Railroaded** | | | | | | | | |
| | | | | **Maximum Width** | 98" | 88" | 88" | 98" | 98" | 98" | 98" | 98" |
| | | | | | Maximum Height | | | | | | | |
| | | | | For Shade Widths to 84" | 144" | 144" | 144" | 108" | 144" | 144" | 144" | 144" |
| | | | | For Shade Widths to 88" | 138" | 138" | 138" | 108" | 138" | 138" | 138" | 138" |
| | | | | For Shade Widths to 90" | 138" | NA | NA | 108" | 138" | 138" | 138" | 138" |
| | | | | For Shade Widths to 96" | 108" | NA | NA | 108" | 108" | 108" | 108" | 108" |
| | | | | For Shade Widths over 96" | 84" | NA | NA | 84" | 84" | 84" | 84" | 84" |
| | | | | **Railroaded** | | | | | | | | |
| | | | | **Maximum Width** | 108" | 108" | 108" | 108" | 108" | 108" | 108" | 108" |
| | | | | | Maximum Height | | | | | | | |
| | | | | For Shade Widths to 96" | 86" | 86" | 86" | 86" | 86" | 86" | 86" | 86" |
| | | | | For Shade Widths over 96" | 66" | 66" | 66" | 66" | 66" | 66" | 66" | 66" |
| **4% S Screen** | 122" | NO | NO | **Non-Railroaded** | | | | | | | | |
| | | | | **Maximum Width** | 102" | 102" | 102" | 102" | 102" | 102" | 102" | 102" |
| | | | | | Maximum Height | | | | | | | |
| | | | | For Shade Widths to 72" | 144" | 120" | 120" | 72" | 120" | 102" | 144" | 144" |
| | | | | For Shade Widths to 84" | 126" | 120" | 120" | 72" | 120" | 102" | 126" | 126" |
| | | | | For Shade Widths to 90" | 96" | 96" | 96" | 72" | 96" | 96" | 96" | 96" |
| | | | | For Shade Widths to 96" | 78" | 78" | 78" | 72" | 78" | 78" | 78" | 78" |
| | | | | For Shade Widths over 96" | 60" | 60" | 60" | 60" | 60" | 60" | 60" | 60" |
| **4% Silver Screen** | 94" | YES | YES | **Non-Railroaded** | | | | | | | | |
| | | | | **Maximum Width** | 94" | 84" | 84" | 94" | 94" | 94" | 94" | 94" |
| | | | | | Maximum Height | | | | | | | |
| | | | | For Shade Widths to 84" | 144" | 144" | 144" | 144" | 144" | 144" | 144" | 144" |
| | | | | For Shade Widths to 90" | 138" | NA | NA | 138" | 138" | 138" | 138" | 138" |
| | | | | For Shade Widths to 94" | 108" | NA | NA | 108" | 108" | 108" | 108" | 108" |
| | | | | **Railroaded** | | | | | | | | |
| | | | | **Maximum Width** | 102" | 102" | 102" | 102" | 102" | 102" | 102" | 102" |
| | | | | | Maximum Height | | | | | | | |
| | | | | For Shade Widths to 84" | 144" | 144" | 144" | 144" | 144" | 144" | 144" | 144" |
| | | | | For Shade Widths to 90" | 138" | 138" | 138" | 138" | 138" | 138" | 138" | 138" |
| | | | | For Shade Widths to 96" | 108" | 108" | 108" | 108" | 108" | 108" | 108" | 108" |
| | | | | For Shade Widths to 102" | 84" | 84" | 84" | 84" | 84" | 84" | 84" | 84" |
| **5% E Screen** | 122" | YES | YES | **Non-Railroaded** | | | | | | | | |
| | | | | **Maximum Width** | 102" | 102" | 102" | 102" | 102" | 102" | 102" | 102" |
| | | | | | Maximum Height | | | | | | | |
| | | | | For Shade Widths to 84" | 144" | 144" | 144" | 144" | 144" | 144" | 144" | 144" |
| | | | | For Shade Widths to 90" | 138" | 138" | 138" | 138" | 138" | 138" | 138" | 138" |
| | | | | For Shade Widths to 96" | 108" | 108" | 108" | 108" | 108" | 108" | 108" | 108" |
| | | | | For Shade Widths to 102" | 84" | 84" | 84" | 84" | 84" | 84" | 84" | 84" |
| | | | | **Railroaded** | | | | | | | | |
| | | | | **Maximum Width** | 102" | 102" | 102" | 102" | 102" | 102" | 102" | 102" |
| | | | | | Maximum Height | | | | | | | |
| | | | | For Shade Widths to 84" | 144" | 144" | 144" | 144" | 144" | 144" | 144" | 144" |
| | | | | For Shade Widths to 90" | 138" | 138" | 138" | 138" | 138" | 138" | 138" | 138" |
| | | | | For Shade Widths to 96" | 108" | 108" | 108" | 108" | 108" | 108" | 108" | 108" |
| | | | | For Shade Widths to 102" | 84" | 84" | 84" | 84" | 84" | 84" | 84" | 84" |

**Minimum and Maximum Standards**

Please Note: Shade sizes that are wider than the fabric roll width indicated will be made with the fabric turned width for length (railroaded). The maximum width for non-railroaded shades is the roll width unless otherwise noted.

| Minimum: | Width | Height |
|---|---|---|
| ST30WF | 29" | 12" |

Fabrics turned width for length will have a visible seam when fabricated longer than their maximum roll width less 10". Fabrics turned width for length may have an edge curl. This is not considered a defect in the product.

| Material Name | Roll Width | Railroad Option | Splice /Seam | | Motorized Shade without Top Treament | Motorized Shade Deluxe Valance | Motorized Shade Fabric Valance | Motorized Shade with Medium Cassette | Motorized Shade with Large Cassette | Motorized Shade with 3" Fascia | Motorized Shade with 4" Fascia | Motorized Shade with Pocket Headrail |
|---|---|---|---|---|---|---|---|---|---|---|---|---|
| 5% M Screen Deco | 98" | YES | YES | Non-Railroaded | | | | | | | | |
| | | | | Maximum Width | 96" | 86" | 86" | 96" | 96" | 96" | 96" | 96" |
| | | | | | Maximum Height | | | | | | | |
| | | | | For Shade Widths to 84" | 144" | 144" | 144" | 126" | 144" | 144" | 144" | 144" |
| | | | | For Shade Widths to 86" | 138" | 138" | 138" | 126" | 138" | 138" | 138" | 138" |
| | | | | For Shade Widths to 90" | 138" | NA | NA | 126" | 138" | 138" | 138" | 138" |
| | | | | For Shade Widths to 96" | 108" | NA | NA | 108" | 108" | 108" | 108" | 108" |
| | | | | Railroaded | | | | | | | | |
| | | | | Maximum Width | 102" | 102" | 102" | 102" | 102" | 102" | 102" | 102" |
| | | | | | Maximum Height | | | | | | | |
| | | | | For Shade Widths to 84" | 144" | 144" | 144" | 126" | 144" | 144" | 144" | 144" |
| | | | | For Shade Widths to 90" | 138" | 138" | 138" | 126" | 138" | 138" | 138" | 138" |
| | | | | For Shade Widths to 96" | 108" | 108" | 108" | 108" | 108" | 108" | 108" | 108" |
| | | | | For Shade Widths to 102" | 84" | 84" | 84" | 84" | 84" | 84" | 84" | 84" |
| | | | | For Shade Widths over 102" | NA | NA | NA | NA | NA | NA | NA | NA |
| 5% Sheerweave 2000 | 126" | YES | YES | Non-Railroaded | | | | | | | | |
| | | | | Maximum Width | 96" | 96" | 96" | 96" | 96" | 96" | 96" | 96" |
| | | | | | Maximum Height | | | | | | | |
| | | | | For Shade Widths to 54" | 144" | 144" | 144" | 132" | 144" | 144" | 144" | 144" |
| | | | | For Shade Widths to 60" | 144" | 144" | 144" | 126" | 144" | 144" | 144" | 144" |
| | | | | For Shade Widths to 66" | 144" | 144" | 144" | 126" | 144" | 144" | 144" | 144" |
| | | | | For Shade Widths to 72" | 144" | 144" | 144" | 126" | 144" | 144" | 144" | 144" |
| | | | | For Shade Widths to 78" | 144" | 144" | 144" | 126" | 144" | 144" | 144" | 144" |
| | | | | For Shade Widths to 84" | 126" | 126" | 126" | 126" | 126" | 126" | 126" | 126" |
| | | | | For Shade Widths to 90" | 96" | 96" | 96" | 96" | 96" | 96" | 96" | 96" |
| | | | | For Shade Widths to 96" | 78" | 78" | 78" | 78" | 78" | 78" | 78" | 78" |
| | | | | Railroaded | | | | | | | | |
| | | | | Maximum Width | 96" | 96" | 96" | 96" | 96" | 96" | 96" | 96" |
| | | | | | Maximum Height | | | | | | | |
| | | | | For Shade Widths to 54" | 120" | 120" | 120" | 120" | 120" | 120" | 120" | 120" |
| | | | | For Shade Widths to 60" | 120" | 120" | 120" | 120" | 120" | 120" | 120" | 120" |
| | | | | For Shade Widths to 66" | 120" | 120" | 120" | 120" | 120" | 120" | 120" | 120" |
| | | | | For Shade Widths to 72" | 120" | 120" | 120" | 120" | 120" | 120" | 120" | 120" |
| | | | | For Shade Widths to 78" | 120" | 120" | 120" | 120" | 120" | 120" | 120" | 120" |
| | | | | For Shade Widths to 84" | 120" | 120" | 120" | 120" | 120" | 120" | 120" | 120" |
| | | | | For Shade Widths to 90" | 96" | 96" | 96" | 96" | 96" | 96" | 96" | 96" |
| | | | | For Shade Widths to 96" | 78" | 78" | 78" | 78" | 78" | 78" | 78" | 78" |
| 5% Sheerweave 2390 | 126" | YES | YES | Non-Railroaded | | | | | | | | |
| | | | | Maximum Width | 102" | 102" | 102" | 102" | 102" | 102" | 102" | 102" |
| | | | | | Maximum Height | | | | | | | |
| | | | | For Shade Widths to 84" | 144" | 144" | 144" | 144" | 144" | 144" | 144" | 144" |
| | | | | For Shade Widths to 90" | 138" | 138" | 138" | 138" | 138" | 138" | 138" | 138" |
| | | | | For Shade Widths to 96" | 108" | 108" | 108" | 108" | 108" | 108" | 108" | 108" |
| | | | | For Shade Widths to 102" | 84" | 84" | 84" | 84" | 84" | 84" | 84" | 84" |
| | | | | Railroaded | | | | | | | | |
| | | | | Maximum Width | 102" | 102" | 102" | 102" | 102" | 102" | 102" | 102" |
| | | | | | Maximum Height | | | | | | | |
| | | | | For Shade Widths to 84" | 144" | 144" | 144" | 144" | 144" | 144" | 144" | 144" |
| | | | | For Shade Widths to 90" | 138" | 138" | 138" | 138" | 138" | 138" | 138" | 138" |
| | | | | For Shade Widths to 96" | 108" | 108" | 108" | 108" | 108" | 108" | 108" | 108" |
| | | | | For Shade Widths to 102" | 84" | 84" | 84" | 84" | 84" | 84" | 84" | 84" |
| 5% Sheerweave 2705 | 126" | NO | NO | Non-Railroaded | | | | | | | | |
| | | | | Maximum Width | 98" | 98" | N/A | 98" | 98" | 98" | 98" | 98" |
| | | | | | Maximum Height | | | | | | | |
| | | | | For Shade Widths to 66" | 120" | 120" | N/A | 102" | 120" | 120" | 120" | 120" |
| | | | | For Shade Widths to 72" | 120" | 120" | N/A | 102" | 120" | 120" | 120" | 120" |
| | | | | For Shade Widths to 78" | 120" | 120" | N/A | 102" | 120" | 120" | 120" | 120" |
| | | | | For Shade Widths to 84" | 120" | 120" | N/A | 102" | 120" | 120" | 120" | 120" |
| | | | | For Shade Widths to 90" | 120" | 120" | N/A | 102" | 120" | 120" | 120" | 120" |
| | | | | For Shade Widths to 96" | 108" | 108" | N/A | 102" | 108" | 108" | 108" | 108" |
| | | | | For Shade Widths over 96" | 84" | 84" | N/A | 84" | 84" | 84" | 84" | 84" |

**Minimum and Maximum Standards**

Please Note: Shade sizes that are wider than the fabric roll width indicated will be made with the fabric turned width for length (railroaded). The maximum width for non-railroaded shades is the roll width unless otherwise noted.

| Minimum: | Width | Height |
|---|---|---|
| ST30WF | 29" | 12" |

Fabrics turned width for length will have a visible seam when fabricated longer than their maximum roll width less 10". Fabrics turned width for length may have an edge curl. This is not considered a defect in the product.

| Material Name | Roll Width | Railroad Option | Splice /Seam | | Motorized Shade without Top Treament | Motorized Shade Deluxe Valance | Motorized Shade Fabric Valance | Motorized Shade with Medium Cassette | Motorized Shade with Large Cassette | Motorized Shade with 3" Fascia | Motorized Shade with 4" Fascia | Motorized Shade with Pocket Headrail |
|---|---|---|---|---|---|---|---|---|---|---|---|---|
| 5% Sheerweave 4000 | 126" | YES | YES | Non-Railroaded | | | | | | | | |
| | | | | Maximum Width | 102" | 102" | 102" | 102" | 102" | 102" | 102" | 102" |
| | | | | | Maximum Height | | | | | | | |
| | | | | For Shade Widths to 78" | 144" | 138" | 138" | 90" | 138" | 120" | 144" | 144" |
| | | | | For Shade Widths to 84" | 126" | 126" | 126" | 90" | 126" | 120" | 126" | 126" |
| | | | | For Shade Widths to 90" | 96" | 96" | 96" | 90" | 96" | 96" | 96" | 96" |
| | | | | For Shade Widths to 96" | 78" | 78" | 78" | 78" | 78" | 78" | 78" | 78" |
| | | | | For Shade Widths over 96" | 60" | 60" | 60" | 60" | 60" | 60" | 60" | 60" |
| | | | | Railroaded | | | | | | | | |
| | | | | Maximum Width | 102" | 102" | 102" | 102" | 102" | 102" | 102" | 102" |
| | | | | | Maximum Height | | | | | | | |
| | | | | For Shade Widths to 78" | 144" | 138" | 138" | 90" | 138" | 120" | 144" | 144" |
| | | | | For Shade Widths to 84" | 126" | 126" | 126" | 90" | 126" | 120" | 126" | 126" |
| | | | | For Shade Widths to 90" | 96" | 96" | 96" | 90" | 96" | 96" | 96" | 96" |
| | | | | For Shade Widths to 96" | 78" | 78" | 78" | 78" | 78" | 78" | 78" | 78" |
| | | | | For Shade Widths over 96" | 60" | 60" | 60" | 60" | 60" | 60" | 60" | 60" |
| 5% Sheerweave 4500 | 126" | YES | YES | Non-Railroaded | | | | | | | | |
| | | | | Maximum Width | 96" | 96" | 96" | 96" | 96" | 96" | 96" | 96" |
| | | | | | Maximum Height | | | | | | | |
| | | | | For Shade Widths to 54" | 144" | 144" | 144" | 108" | 144" | 144" | 144" | 144" |
| | | | | For Shade Widths to 60" | 144" | 144" | 144" | 108" | 144" | 144" | 144" | 144" |
| | | | | For Shade Widths to 66" | 144" | 144" | 144" | 108" | 144" | 144" | 144" | 144" |
| | | | | For Shade Widths to 72" | 144" | 144" | 144" | 108" | 144" | 144" | 144" | 144" |
| | | | | For Shade Widths to 78" | 144" | 144" | 144" | 108" | 144" | 144" | 144" | 144" |
| | | | | For Shade Widths to 84" | 126" | 126" | 126" | 108" | 126" | 126" | 126" | 126" |
| | | | | For Shade Widths to 90" | 96" | 96" | 96" | 96" | 96" | 96" | 96" | 96" |
| | | | | For Shade Widths to 96" | 78" | 78" | 78" | 72" | 78" | 78" | 78" | 78" |
| | | | | Railroaded | | | | | | | | |
| | | | | Maximum Width | 96" | 96" | 96" | 96" | 96" | 96" | 96" | 96" |
| | | | | | Maximum Height | | | | | | | |
| | | | | For Shade Widths to 54" | 144" | 144" | 144" | 108" | 144" | 144" | 144" | 144" |
| | | | | For Shade Widths to 60" | 144" | 144" | 144" | 108" | 144" | 144" | 144" | 144" |
| | | | | For Shade Widths to 66" | 144" | 144" | 144" | 108" | 144" | 144" | 144" | 144" |
| | | | | For Shade Widths to 72" | 144" | 144" | 144" | 108" | 144" | 144" | 144" | 144" |
| | | | | For Shade Widths to 78" | 144" | 144" | 144" | 108" | 144" | 144" | 144" | 144" |
| | | | | For Shade Widths to 84" | 126" | 126" | 126" | 108" | 126" | 126" | 126" | 126" |
| | | | | For Shade Widths to 90" | 96" | 96" | 96" | 96" | 96" | 96" | 96" | 96" |
| | | | | For Shade Widths to 96" | 78" | 78" | 78" | 72" | 78" | 78" | 78" | 78" |
| 5% Sheerweave 5000 *(R10_01, 03, 06, 07, 09, 10, 11, 12, 13,14, 15, 16, 17, 18, 19, 20, 21)* | 98" | NO | NO | Non-Railroaded | | | | | | | | |
| | | | | Maximum Width | 98" | 88" | 88" | 98" | 98" | 98" | 98" | 98" |
| | | | | | Maximum Height | | | | | | | |
| | | | | For Shade Widths to 72" | 144" | 90" | 90" | 54" | 90" | 78" | 144" | 126" |
| | | | | For Shade Widths to 84" | 126" | 90" | 90" | 54" | 90" | 78" | 126" | 126" |
| | | | | For Shade Widths to 88" | 96" | 90" | 90" | 54" | 90" | 78" | 96" | 96" |
| | | | | For Shade Widths to 90" | 96" | NA | NA | 54" | 90" | 78" | 96" | 96" |
| | | | | For Shade Widths over 90" | 60" | NA | NA | 54" | 60" | 60" | 60" | 60" |
| 5% Sheerweave 5000 *(R10_Q51, S77, S84)* | 98" | NO | NO | Non-Railroaded | | | | | | | | |
| | | | | Maximum Width | 96" | 88" | 88" | 96" | 96" | 96" | 96" | 96" |
| | | | | | Maximum Height | | | | | | | |
| | | | | For Shade Widths to 54" | 144" | 90" | 90" | 54" | 90" | 78" | 144" | 126" |
| | | | | For Shade Widths to 60" | 144" | 90" | 90" | 54" | 90" | 78" | 144" | 126" |
| | | | | For Shade Widths to 66" | 144" | 90" | 90" | 54" | 90" | 78" | 144" | 126" |
| | | | | For Shade Widths to 72" | 144" | 90" | 90" | 54" | 90" | 78" | 144" | 126" |
| | | | | For Shade Widths to 78" | 144" | 90" | 90" | 54" | 90" | 78" | 144" | 126" |
| | | | | For Shade Widths to 84" | 126" | 90" | 90" | 54" | 90" | 78" | 126" | 126" |
| | | | | For Shade Widths to 88" | 96" | 90" | 90" | 54" | 90" | 78" | 96" | 96" |
| | | | | For Shade Widths to 90" | 96" | NA | NA | 54" | 90" | 78" | 96" | 96" |
| | | | | For Shade Widths over 90" | 78" | NA | NA | 54" | 78" | 78" | 78" | 78" |
| 5% Sheerweave 5000 *(R10_Q43, S82)* | 98" | NO | NO | Non-Railroaded | | | | | | | | |
| | | | | Maximum Width | 96" | 88" | 88" | 96" | 96" | 96" | 96" | 96" |
| | | | | | Maximum Height | | | | | | | |
| | | | | For Shade Widths to 54" | 144" | 102" | 102" | 66" | 102" | 90" | 144" | 144" |
| | | | | For Shade Widths to 60" | 144" | 102" | 102" | 66" | 102" | 90" | 144" | 144" |
| | | | | For Shade Widths to 66" | 144" | 102" | 102" | 66" | 102" | 90" | 144" | 144" |
| | | | | For Shade Widths to 72" | 144" | 102" | 102" | 66" | 102" | 90" | 144" | 144" |
| | | | | For Shade Widths to 78" | 144" | 102" | 102" | 66" | 102" | 90" | 144" | 144" |
| | | | | For Shade Widths to 84" | 126" | 102" | 102" | 66" | 102" | 90" | 126" | 126" |
| | | | | For Shade Widths to 88" | 96" | 96" | 96" | 66" | 96" | 90" | 96" | 96" |
| | | | | For Shade Widths to 90" | 96" | NA | NA | 66" | 96" | 90" | 96" | 96" |
| | | | | For Shade Widths over 90" | 78" | NA | NA | 66" | 78" | 78" | 78" | 78" |

**Minimum and Maximum Standards**

Please Note: Shade sizes that are wider than the fabric roll width indicated will be made with the fabric turned width for length (railroaded). The maximum width for non-railroaded shades is the roll width unless otherwise noted.

| Minimum: | Width | Height |
|---|---|---|
| ST30WF | 29" | 12" |

Fabrics turned width for length will have a visible seam when fabricated longer than their maximum roll width less 10". Fabrics turned width for length may have an edge curl. This is not considered a defect in the product.

| Material Name | Roll Width | Railroad Option | Splice /Seam | | Motorized Shade without Top Treament | Motorized Shade Deluxe Valance | Motorized Shade Fabric Valance | Motorized Shade with Medium Cassette | Motorized Shade with Large Cassette | Motorized Shade with 3" Fascia | Motorized Shade with 4" Fascia | Motorized Shade with Pocket Headrail |
|---|---|---|---|---|---|---|---|---|---|---|---|---|
| 7% Global Screen | 118" | YES | YES | Non-Railroaded | | | | | | | | |
| | | | | Maximum Width | 108" | 108" | 108" | 108" | 108" | 108" | 108" | 108" |
| | | | | | Maximum Height | | | | | | | |
| | | | | For Shade Widths to 84" | 144" | 144" | 144" | 126" | 144" | 144" | 144" | 144" |
| | | | | For Shade Widths to 90" | 138" | 138" | 138" | 126" | 138" | 138" | 138" | 138" |
| | | | | For Shade Widths to 96" | 108" | 108" | 108" | 108" | 108" | 108" | 108" | 108" |
| | | | | For Shade Widths to 102" | 84" | 84" | 84" | 84" | 84" | 84" | 84" | 84" |
| | | | | For Shade Widths to 108" | 66" | 66" | 66" | 66" | 66" | 66" | 66" | 66" |
| | | | | Railroaded | | | | | | | | |
| | | | | Maximum Width | 108" | 108" | 108" | 108" | 108" | 108" | 108" | 108" |
| | | | | | Maximum Height | | | | | | | |
| | | | | For Shade Widths to 84" | 144" | 144" | 144" | 126" | 144" | 144" | 144" | 144" |
| | | | | For Shade Widths to 90" | 138" | 138" | 138" | 126" | 138" | 138" | 138" | 138" |
| | | | | For Shade Widths to 96" | 108" | 108" | 108" | 108" | 108" | 108" | 108" | 108" |
| | | | | For Shade Widths to 102" | 84" | 84" | 84" | 84" | 84" | 84" | 84" | 84" |
| | | | | For Shade Widths to 108" | 66" | 66" | 66" | 66" | 66" | 66" | 66" | 66" |
| 7% Sheerweave 5000 *(R34_Q46)* | 98" | NO | NO | Non-Railroaded | | | | | | | | |
| | | | | Maximum Width | 98" | 88" | 88" | 98" | 98" | 98" | 98" | 98" |
| | | | | | Maximum Height | | | | | | | |
| | | | | For Shade Widths to 72" | 144" | 102" | 102" | 66" | 102" | 90" | 144" | 144" |
| | | | | For Shade Widths to 84" | 126" | 102" | 102" | 66" | 102" | 90" | 126" | 126" |
| | | | | For Shade Widths to 88" | 96" | 96" | 96" | 66" | 96" | 90" | 96" | 96" |
| | | | | For Shade Widths to 90" | 96" | NA | NA | 66" | 96" | 90" | 96" | 96" |
| | | | | For Shade Widths over 90" | 60" | NA | NA | 60" | 60" | 60" | 60" | 60" |
| 7% Sheerweave 5000 *(R34_08, 09)* | 98" | NO | NO | Non-Railroaded | | | | | | | | |
| | | | | Maximum Width | 98" | 88" | 88" | 98" | 98" | 98" | 98" | 98" |
| | | | | | Maximum Height | | | | | | | |
| | | | | For Shade Widths to 72" | 144" | 144" | 144" | 78" | 126" | 108" | 144" | 144" |
| | | | | For Shade Widths to 84" | 126" | 144" | 144" | 78" | 126" | 108" | 126" | 126" |
| | | | | For Shade Widths to 88" | 96" | 138" | 138" | 78" | 96" | 96" | 96" | 96" |
| | | | | For Shade Widths to 90" | 96" | NA | NA | 78" | 96" | 96" | 96" | 96" |
| | | | | For Shade Widths to 96" | 78" | NA | NA | 78" | 78" | 78" | 78" | 78" |
| | | | | For Shade Widths over 96" | 60" | NA | NA | 60" | 60" | 60" | 60" | 60" |
| 7% Sheerweave 5000 *(R34_S73)* | 98" | NO | NO | Non-Railroaded | | | | | | | | |
| | | | | Maximum Width | 96" | 88" | 88" | 96" | 96" | 96" | 96" | 96" |
| | | | | | Maximum Height | | | | | | | |
| | | | | For Shade Widths to 54" | 144" | 96" | 96" | 60" | 96" | 84" | 144" | 138" |
| | | | | For Shade Widths to 60" | 144" | 96" | 96" | 60" | 96" | 84" | 144" | 138" |
| | | | | For Shade Widths to 66" | 144" | 96" | 96" | 60" | 96" | 84" | 144" | 138" |
| | | | | For Shade Widths to 72" | 144" | 96" | 96" | 60" | 96" | 84" | 144" | 138" |
| | | | | For Shade Widths to 78" | 144" | 96" | 96" | 60" | 96" | 84" | 144" | 138" |
| | | | | For Shade Widths to 84" | 126" | 96" | 96" | 60" | 96" | 84" | 126" | 126" |
| | | | | For Shade Widths to 88" | 96" | 96" | 96" | 60" | 96" | 84" | 96" | 96" |
| | | | | For Shade Widths to 90" | 96" | NA | NA | 60" | 96" | 84" | 96" | 96" |
| | | | | For Shade Widths over 90" | 78" | NA | NA | 60" | 78" | 78" | 78" | 78" |
| 10% E Screen | 122" | YES | YES | Non-Railroaded | | | | | | | | |
| | | | | Maximum Width | 108" | 108" | 108" | 108" | 108" | 108" | 108" | 108" |
| | | | | | Maximum Height | | | | | | | |
| | | | | For Shade Widths to 84" | 144" | 144" | 144" | 138" | 144" | 144" | 144" | 144" |
| | | | | For Shade Widths to 90" | 138" | 138" | 138" | 138" | 138" | 138" | 138" | 138" |
| | | | | For Shade Widths to 96" | 108" | 108" | 108" | 108" | 108" | 108" | 108" | 108" |
| | | | | For Shade Widths to 102" | 84" | 84" | 84" | 84" | 84" | 84" | 84" | 84" |
| | | | | For Shade Widths over 102" | 66" | 66" | 66" | 66" | 66" | 66" | 66" | 66" |
| | | | | Railroaded | | | | | | | | |
| | | | | Maximum Width | 108" | 108" | 108" | 108" | 108" | 108" | 108" | 108" |
| | | | | | Maximum Height | | | | | | | |
| | | | | For Shade Widths to 84" | 144" | 144" | 144" | 138" | 144" | 144" | 144" | 144" |
| | | | | For Shade Widths to 90" | 138" | 138" | 138" | 138" | 138" | 138" | 138" | 138" |
| | | | | For Shade Widths to 96" | 108" | 108" | 108" | 108" | 108" | 108" | 108" | 108" |
| | | | | For Shade Widths to 102" | 84" | 84" | 84" | 84" | 84" | 84" | 84" | 84" |
| | | | | For Shade Widths over 102" | 66" | 66" | 66" | 66" | 66" | 66" | 66" | 66" |

**Minimum and Maximum Standards**

Please Note: Shade sizes that are wider than the fabric roll width indicated will be made with the fabric turned width for length (railroaded). The maximum width for non-railroaded shades is the roll width unless otherwise noted.

| Minimum: | Width | Height |
|---|---|---|
| ST30WF | 29" | 12" |

Fabrics turned width for length will have a visible seam when fabricated longer than their maximum roll width less 10". Fabrics turned width for length may have an edge curl. This is not considered a defect in the product.

| Material Name | Roll Width | Railroad Option | Splice /Seam | | Motorized Shade without Top Treament | Motorized Shade Deluxe Valance | Motorized Shade Fabric Valance | Motorized Shade with Medium Cassette | Motorized Shade with Large Cassette | Motorized Shade with 3" Fascia | Motorized Shade with 4" Fascia | Motorized Shade with Pocket Headrail |
|---|---|---|---|---|---|---|---|---|---|---|---|---|
| 10% Sheerweave 2360 | 126" | NO | NO | Non-Railroaded | | | | | | | | |
| | | | | Maximum Width | 102" | 102" | 102" | 102" | 102" | 102" | 102" | 102" |
| | | | | | Maximum Height | | | | | | | |
| | | | | For Shade Widths to 66" | 144" | 144" | 144" | 138" | 144" | 144" | 144" | 144" |
| | | | | For Shade Widths to 72" | 144" | 144" | 144" | 138" | 144" | 144" | 144" | 144" |
| | | | | For Shade Widths to 78" | 144" | 144" | 144" | 138" | 144" | 144" | 144" | 144" |
| | | | | For Shade Widths to 84" | 144" | 144" | 144" | 138" | 144" | 144" | 144" | 144" |
| | | | | For Shade Widths to 90" | 138" | 138" | 138" | 138" | 138" | 138" | 138" | 138" |
| | | | | For Shade Widths to 96" | 108" | 108" | 108" | 102" | 108" | 108" | 108" | 108" |
| | | | | For Shade Widths to 102" | 84" | 84" | 84" | 84" | 84" | 84" | 84" | 84" |
| 10% Sheerweave 4100 | 98" | YES | YES | Non-Railroaded | | | | | | | | |
| | | | | Maximum Width | 96" | 88" | 88" | 96" | 96" | 96" | 96" | 96" |
| | | | | | Maximum Height | | | | | | | |
| | | | | For Shade Widths to 54" | 144" | 120" | 120" | 78" | 120" | 108" | 144" | 144" |
| | | | | For Shade Widths to 60" | 144" | 120" | 120" | 78" | 120" | 108" | 144" | 144" |
| | | | | For Shade Widths to 66" | 144" | 120" | 120" | 78" | 120" | 108" | 144" | 144" |
| | | | | For Shade Widths to 72" | 144" | 120" | 120" | 78" | 120" | 108" | 144" | 144" |
| | | | | For Shade Widths to 78" | 144" | 120" | 120" | 78" | 120" | 108" | 144" | 144" |
| | | | | For Shade Widths to 84" | 126" | 120" | 120" | 78" | 120" | 108" | 126" | 126" |
| | | | | For Shade Widths to 88" | 96" | 96" | 96" | 78" | 96" | 96" | 96" | 96" |
| | | | | For Shade Widths to 90" | 96" | N/A | N/A | 78" | 96" | 96" | 96" | 96" |
| | | | | For Shade Widths to 96" | 78" | N/A | N/A | 78" | 78" | 78" | 78" | 78" |
| | | | | Railroaded | | | | | | | | |
| | | | | Maximum Width | 96" | 96" | 96" | 96" | 96" | 96" | 96" | 96" |
| | | | | | Maximum Height | | | | | | | |
| | | | | For Shade Widths to 54" | 120" | 120" | 120" | 78" | 120" | 108" | 120" | 120" |
| | | | | For Shade Widths to 60" | 120" | 120" | 120" | 78" | 120" | 108" | 120" | 120" |
| | | | | For Shade Widths to 66" | 120" | 120" | 120" | 78" | 120" | 108" | 120" | 120" |
| | | | | For Shade Widths to 72" | 120" | 120" | 120" | 78" | 120" | 108" | 120" | 120" |
| | | | | For Shade Widths to 78" | 120" | 120" | 120" | 78" | 120" | 108" | 120" | 120" |
| | | | | For Shade Widths to 84" | 120" | 120" | 120" | 78" | 120" | 108" | 120" | 120" |
| | | | | For Shade Widths to 90" | 96" | 96" | 96" | 78" | 96" | 96" | 96" | 96" |
| | | | | For Shade Widths to 96" | 78" | 78" | 78" | 78" | 78" | 78" | 78" | 78" |
| 10% Sheerweave 5000 *(R26_03)* | 98" | NO | NO | Non-Railroaded | | | | | | | | |
| | | | | Maximum Width | 98" | 88" | 88" | 98" | 98" | 98" | 98" | 98" |
| | | | | | Maximum Height | | | | | | | |
| | | | | For Shade Widths to 72" | 144" | 90" | 90" | 54" | 90" | 78" | 144" | 126" |
| | | | | For Shade Widths to 84" | 126" | 90" | 90" | 54" | 90" | 78" | 126" | 126" |
| | | | | For Shade Widths to 88" | 96" | 90" | 90" | 54" | 90" | 78" | 96" | 96" |
| | | | | For Shade Widths to 90" | 96" | NA | NA | 54" | 90" | 78" | 96" | 96" |
| | | | | For Shade Widths over 90" | 60" | NA | NA | 54" | 60" | 60" | 60" | 60" |
| 10% Sheerweave 5000 *(R26_U16, U24, U28, U29)* | 98" | NO | NO | Non-Railroaded | | | | | | | | |
| | | | | Maximum Width | 96" | 88" | 88" | 96" | 96" | 96" | 96" | 96" |
| | | | | | Maximum Height | | | | | | | |
| | | | | For Shade Widths to 54" | 144" | 96" | 96" | 60" | 96" | 90" | 144" | 144" |
| | | | | For Shade Widths to 60" | 144" | 96" | 96" | 60" | 96" | 90" | 144" | 144" |
| | | | | For Shade Widths to 66" | 144" | 96" | 96" | 60" | 96" | 90" | 144" | 144" |
| | | | | For Shade Widths to 72" | 144" | 96" | 96" | 60" | 96" | 90" | 144" | 144" |
| | | | | For Shade Widths to 78" | 144" | 96" | 96" | 60" | 96" | 90" | 144" | 144" |
| | | | | For Shade Widths to 84" | 126" | 96" | 96" | 60" | 96" | 90" | 126" | 126" |
| | | | | For Shade Widths to 88" | 96" | 96" | 96" | 60" | 96" | 90" | 96" | 96" |
| | | | | For Shade Widths to 90" | 96" | NA | NA | 60" | 96" | 90" | 96" | 96" |
| | | | | For Shade Widths over 90" | 78" | NA | NA | 60" | 78" | 78" | 78" | 78" |

**Minimum and Maximum Standards**

Please Note: Shade sizes that are wider than the fabric roll width indicated will be made with the fabric turned width for length (railroaded). The maximum width for non-railroaded shades is the roll width unless otherwise noted.

| Minimum: | Width | Height |
|---|---|---|
| ST30WF | 29" | 12" |

Fabrics turned width for length will have a visible seam when fabricated longer than their maximum roll width less 10". Fabrics turned width for length may have an edge curl. This is not considered a defect in the product.

| Material Name | Roll Width | Railroad Option | Splice /Seam | | Motorized Shade without Top Treament | Motorized Shade Deluxe Valance | Motorized Shade Fabric Valance | Motorized Shade with Medium Cassette | Motorized Shade with Large Cassette | Motorized Shade with 3" Fascia | Motorized Shade with 4" Fascia | Motorized Shade with Pocket Headrail |
|---|---|---|---|---|---|---|---|---|---|---|---|---|
| Alexandria | 78" | NO | NO | Non-Railroaded | | | | | | | | |
| | | | | Maximum Width | 78" | 68" | 68" | 78" | 78" | 78" | 78" | 78" |
| | | | | | Maximum Height | | | | | | | |
| | | | | For Shade Widths to 68" | 144" | 144" | 144" | 144" | 144" | 144" | 144" | 144" |
| | | | | For Shade Widths to 78" | 144" | NA | NA | 144" | 144" | 144" | 144" | 144" |
| Astaire | 94" | NO | NO | Non-Railroaded | | | | | | | | |
| | | | | Maximum Width | 94" | NA | NA | 94" | 94" | 94" | 94" | 94" |
| | | | | | Maximum Height | | | | | | | |
| | | | | For Shade Widths to 94" | 144" | NA | NA | 78" | 120" | 108" | 144" | 144" |
| Avila R Blackout | 118" | YES | YES | Non-Railroaded | | | | | | | | |
| | | | | Maximum Width | 108" | 108" | 108" | 108" | 108" | 108" | 108" | 108" |
| | | | | | Maximum Height | | | | | | | |
| | | | | For Shade Widths to 84" | 144" | 144" | 144" | 144" | 144" | 144" | 144" | 144" |
| | | | | For Shade Widths to 90" | 138" | 138" | 138" | 138" | 138" | 138" | 138" | 138" |
| | | | | For Shade Widths to 96" | 108" | 108" | 108" | 108" | 108" | 108" | 108" | 108" |
| | | | | For Shade Widths over 96" | 66" | 66" | 66" | 66" | 66" | 66" | 66" | 66" |
| | | | | Railroaded | | | | | | | | |
| | | | | Maximum Width | 108" | 108" | 108" | 108" | 108" | 108" | 108" | 108" |
| | | | | | Maximum Height | | | | | | | |
| | | | | For Shade Widths to 90" | 120" | 120" | 120" | 120" | 120" | 120" | 120" | 120" |
| | | | | For Shade Widths to 96" | 108" | 108" | 108" | 108" | 108" | 108" | 108" | 108" |
| | | | | For Shade Widths over 96" | 66" | 66" | 66" | 66" | 66" | 66" | 66" | 66" |
| Baroque | 78" | NO | NO | Non-Railroaded | | | | | | | | |
| | | | | Maximum Width | 78" | 68" | 68" | 78" | 78" | 78" | 78" | 78" |
| | | | | | Maximum Height | | | | | | | |
| | | | | For Shade Widths to 68" | 144" | 144" | 144" | 144" | 144" | 144" | 144" | 144" |
| | | | | For Shade Widths to 78" | 144" | NA | NA | 144" | 144" | 144" | 144" | 144" |
| Blackout - Solid | 72" | YES | YES | Non-Railroaded | | | | | | | | |
| | | | | Maximum Width | 72" | 62" | 62" | 72" | 72" | 72" | 72" | 72" |
| | | | | | Maximum Height | | | | | | | |
| | | | | For Shade Widths to 62" | 144" | 144" | NA | 144" | 144" | 144" | 144" | 144" |
| | | | | For Shade Widths to 72" | 144" | NA | NA | 144" | 144" | 144" | 144" | 144" |
| | | | | | *Fabric and Deluxe valance - max shade size is 62" x 144" | | | | | | | |
| | | | | Railroaded | | | | | | | | |
| | | | | Maximum Width | 102" | 102" | 102" | 102" | 102" | 102" | 102" | 102" |
| | | | | | Maximum Height | | | | | | | |
| | | | | For Shade Widths to 90" | 130" | 130" | NA | 130" | 130" | 130" | 130" | 130" |
| | | | | For Shade Widths to 96" | 108" | 108" | NA | 108" | 108" | 108" | 108" | 108" |
| | | | | For Shade Widths to 102" | 84" | 84" | NA | 84" | 84" | 84" | 84" | 84" |
| Brilliance | 118" | NO | NO | Non-Railroaded | | | | | | | | |
| | | | | Maximum Width | 118" | 108" | 108" | 118" | 118" | 118" | 118" | 118" |
| | | | | | Maximum Height | | | | | | | |
| | | | | For Shade Widths to 96" | 144" | 144" | 144" | 144" | 144" | 144" | 144" | 144" |
| | | | | For Shade Widths over 96" | 60" | 60" | 60" | 60" | 60" | 60" | 60" | 60" |
| Brilliance Blackout | 118" | NO | NO | Non-Railroaded | | | | | | | | |
| | | | | Maximum Width | 108" | 108" | 108" | 108" | 108" | 108" | 108" | 108" |
| | | | | | Maximum Height | | | | | | | |
| | | | | For Shade Widths to 84" | 144" | 144" | 144" | 114" | 144" | 144" | 144" | 144" |
| | | | | For Shade Widths to 90" | 138" | 138" | 138" | 114" | 138" | 138" | 138" | 138" |
| | | | | For Shade Widths to 96" | 108" | 108" | 108" | 108" | 108" | 108" | 108" | 108" |
| | | | | For Shade Widths over 96" | 66" | 66" | 66" | 66" | 66" | 66" | 66" | 66" |

**Minimum and Maximum Standards**

Please Note: Shade sizes that are wider than the fabric roll width indicated will be made with the fabric turned width for length (railroaded). The maximum width for non-railroaded shades is the roll width unless otherwise noted.

| Minimum: | Width | Height |
|---|---|---|
| ST30WF | 29" | 12" |

Fabrics turned width for length will have a visible seam when fabricated longer than their maximum roll width less 10". Fabrics turned width for length may have an edge curl. This is not considered a defect in the product.

| Material Name | Roll Width | Railroad Option | Splice /Seam | | Motorized Shade without Top Treament | Motorized Shade Deluxe Valance | Motorized Shade Fabric Valance | Motorized Shade with Medium Cassette | Motorized Shade with Large Cassette | Motorized Shade with 3" Fascia | Motorized Shade with 4" Fascia | Motorized Shade with Pocket Headrail |
|---|---|---|---|---|---|---|---|---|---|---|---|---|
| Carrara | 110" | NO | NO | Non-Railroaded | | | | | | | | |
| | | | | Maximum Width | 110" | 100" | 100" | 110" | 110" | 110" | 110" | 110" |
| | | | | | Maximum Height | | | | | | | |
| | | | | For Shade Widths to 66" | 144" | 144" | 144" | 144" | 144" | 144" | 144" | 144" |
| | | | | For Shade Widths to 78" | 144" | 144" | 144" | 144" | 144" | 144" | 144" | 144" |
| | | | | For Shade Widths to 90" | 138" | 138" | 138" | 138" | 138" | 138" | 138" | 138" |
| | | | | For Shade Widths to 100" | 84" | 84" | 84" | 84" | 84" | 84" | 84" | 84" |
| | | | | For Shade Widths to 102" | 84" | NA | NA | 84" | 84" | 84" | 84" | 84" |
| | | | | For Shade Widths to 108" | 66" | NA | NA | 66" | 66" | 66" | 66" | 66" |
| | | | | For Shade Widths to 110" | 48" | NA | NA | 48" | 48" | 48" | 48" | 48" |
| Carrara Blackout | 110" | NO | NO | Non-Railroaded | | | | | | | | |
| | | | | Maximum Width | 102" | 100" | 100" | 102" | 102" | 102" | 102" | 102" |
| | | | | | Maximum Height | | | | | | | |
| | | | | For Shade Widths to 72" | 144" | 144" | 144" | 96" | 144" | 132" | 144" | 144" |
| | | | | For Shade Widths to 84" | 126" | 126" | 126" | 96" | 126" | 126" | 126" | 126" |
| | | | | For Shade Widths to 90" | 96" | 96" | 96" | 96" | 96" | 96" | 96" | 96" |
| | | | | For Shade Widths to 96" | 78" | 78" | 78" | 78" | 78" | 78" | 78" | 78" |
| | | | | For Shade Widths over 96" | 60" | 60" | 60" | 60" | 60" | 60" | 60" | 60" |
| Claudio | 110" | NO | NO | Non-Railroaded | | | | | | | | |
| | | | | Maximum Width | 110" | 100" | 100" | 110" | 110" | 110" | 110" | 110" |
| | | | | | Maximum Height | | | | | | | |
| | | | | For Shade Widths to 96" | 144" | 144" | 144" | 144" | 144" | 144" | 144" | 144" |
| | | | | For Shade Widths over 96" | 84" | 144" | 144" | 84" | 84" | 84" | 84" | 84" |
| Claudio Blackout | 110" | NO | NO | Non-Railroaded | | | | | | | | |
| | | | | Maximum Width | 108" | 100" | 100" | 108" | 108" | 108" | 108" | 108" |
| | | | | | Maximum Height | | | | | | | |
| | | | | For Shade Widths to 84" | 144" | 144" | 144" | 114" | 144" | 144" | 144" | 144" |
| | | | | For Shade Widths to 90" | 138" | 138" | 138" | 114" | 138" | 138" | 138" | 138" |
| | | | | For Shade Widths to 96" | 108" | 108" | 108" | 108" | 108" | 108" | 108" | 108" |
| | | | | For Shade Widths over 96" | 66" | 66" | 66" | 66" | 66" | 66" | 66" | 66" |
| Cusco | 110" | YES | YES | Non-Railroaded | | | | | | | | |
| | | | | Maximum Width | 102" | 100" | 100" | 102" | 102" | 102" | 102" | 102" |
| | | | | | Maximum Height | | | | | | | |
| | | | | For Shade Widths to 84" | 144" | 144" | 144" | 132" | 144" | 144" | 144" | 144" |
| | | | | For Shade Widths to 90" | 138" | 138" | 138" | 132" | 138" | 138" | 138" | 138" |
| | | | | For Shade Widths to 96" | 108" | 108" | 108" | 108" | 108" | 108" | 108" | 108" |
| | | | | For Shade Widths to 100" | 84" | 84" | 84" | 84" | 84" | 84" | 84" | 84" |
| | | | | For Shade Widths to 102" | 84" | NA | NA | 84" | 84" | 84" | 84" | 84" |
| | | | | Railroaded | | | | | | | | |
| | | | | Maximum Width | 102" | 102" | 102" | 102" | 102" | 102" | 102" | 102" |
| | | | | | Maximum Height | | | | | | | |
| | | | | For Shade Widths to 84" | 144" | 144" | 144" | 132" | 144" | 144" | 144" | 144" |
| | | | | For Shade Widths to 90" | 138" | 138" | 138" | 132" | 138" | 138" | 138" | 138" |
| | | | | For Shade Widths to 96" | 108" | 108" | 108" | 108" | 108" | 108" | 108" | 108" |
| | | | | For Shade Widths to 102" | 84" | 84" | 84" | 84" | 84" | 84" | 84" | 84" |
| Darien | 90" | NO | NO | Non-Railroaded | | | | | | | | |
| | | | | Maximum Width | 90" | 80" | 80" | 90" | 90" | 90" | 90" | 90" |
| | | | | | Maximum Height | | | | | | | |
| | | | | For Shade Widths to 80" | 144" | 144" | 144" | 144" | 144" | 144" | 144" | 144" |
| | | | | For Shade Widths to 90" | 144" | NA | NA | 144" | 144" | 144" | 144" | 144" |
| Drizzle | 94" | YES | YES | Non-Railroaded | | | | | | | | |
| | | | | Maximum Width | 94" | 84" | 84" | 94" | 94" | 94" | 94" | 94" |
| | | | | | Maximum Height | | | | | | | |
| | | | | For Shade Widths to 68" | 144" | 144" | 144" | 144" | 144" | 144" | 144" | 144" |
| | | | | For Shade Widths to 78" | 144" | 144" | 144" | 144" | 144" | 144" | 144" | 144" |
| | | | | For Shade Widths to 84" | 144" | 144" | 144" | 144" | 144" | 144" | 144" | 144" |
| | | | | For Shade Widths to 90" | 144" | NA | NA | 144" | 144" | 144" | 144" | 144" |
| | | | | For Shade Widths over 90" | 144" | NA | NA | 144" | 144" | 144" | 144" | 144" |
| | | | | Railroaded | | | | | | | | |
| | | | | Maximum Width | 120" | 120" | 120" | 120" | 120" | 120" | 120" | 120" |
| | | | | | Maximum Height | | | | | | | |
| | | | | For Shade Widths to 78" | 144" | 144" | 144" | 144" | 144" | 144" | 144" | 144" |
| | | | | For Shade Widths to 96" | 120" | 120" | 120" | 120" | 120" | 120" | 120" | 120" |
| | | | | For Shade Width to over 96" | 60" | 60" | 60" | 60" | 60" | 60" | 60" | 60" |

**Minimum and Maximum Standards**

Please Note: Shade sizes that are wider than the fabric roll width indicated will be made with the fabric turned width for length (railroaded). The maximum width for non-railroaded shades is the roll width unless otherwise noted.

| Minimum: | Width | Height |
|---|---|---|
| ST30WF | 29" | 12" |

Fabrics turned width for length will have a visible seam when fabricated longer than their maximum roll width less 10". Fabrics turned width for length may have an edge curl. This is not considered a defect in the product.

| Material Name | Roll Width | Railroad Option | Splice /Seam | | Motorized Shade without Top Treament | Motorized Shade Deluxe Valance | Motorized Shade Fabric Valance | Motorized Shade with Medium Cassette | Motorized Shade with Large Cassette | Motorized Shade with 3" Fascia | Motorized Shade with 4" Fascia | Motorized Shade with Pocket Headrail |
|---|---|---|---|---|---|---|---|---|---|---|---|---|
| Fiona | 78" | NO | NO | Non-Railroaded | | | | | | | | |
| | | | | Maximum Width | 78" | 68" | 68" | 78" | 78" | 78" | 78" | 78" |
| | | | | | Maximum Height | | | | | | | |
| | | | | For Shade Widths to 68" | 144" | 144" | 144" | 144" | 144" | 144" | 144" | 144" |
| | | | | For Shade Widths to 78" | 144" | NA | NA | 144" | 144" | 144" | 144" | 144" |
| Flocke Blackout | 94" | YES | YES | Non-Railroaded | | | | | | | | |
| | | | | Maximum Width | 94" | 84" | 84" | 94" | 94" | 94" | 94" | 94" |
| | | | | | Maximum Height | | | | | | | |
| | | | | For Shade Widths to 72" | 144" | 144" | 144" | 126" | 144" | 144" | 144" | 144" |
| | | | | For Shade Widths to 84" | 126" | 126" | 126" | 126" | 126" | 126" | 126" | 126" |
| | | | | For Shade Widths to 90" | 96" | NA | NA | 96" | 96" | 96" | 96" | 96" |
| | | | | For Shade Widths over 90" | 78" | NA | NA | 78" | 78" | 78" | 78" | 78" |
| | | | | Railroaded | | | | | | | | |
| | | | | Maximum Width | 102" | 102" | 102" | 102" | 102" | 102" | 102" | 102" |
| | | | | | Maximum Height | | | | | | | |
| | | | | For Shade Widths to 72" | 144" | 144" | 144" | 126" | 144" | 144" | 144" | 144" |
| | | | | For Shade Widths to 84" | 126" | 126" | 126" | 126" | 126" | 126" | 126" | 126" |
| | | | | For Shade Widths to 90" | 96" | 96" | 96" | 96" | 96" | 96" | 96" | 96" |
| | | | | For Shade Widths over 90" | 60" | 60" | 60" | 60" | 60" | 60" | 60" | 60" |
| Hayworth | 98" | YES | YES | Non-Railroaded | | | | | | | | |
| | | | | Maximum Width | 98" | 88" | 88" | 98" | 98" | 98" | 98" | 98" |
| | | | | | Maximum Height | | | | | | | |
| | | | | For Shade Widths to 88" | 144" | 144" | 144" | 144" | 144" | 144" | 144" | 144" |
| | | | | For Shade Widths over 88" | 144" | NA | NA | 144" | 144" | 144" | 144" | 144" |
| | | | | Railroaded | | | | | | | | |
| | | | | Maximum Width | 120" | 120" | 120" | 120" | 120" | 120" | 120" | 120" |
| | | | | | Maximum Height | | | | | | | |
| | | | | For Shade Widths to 102" | 144" | 144" | 144" | 144" | 144" | 144" | 144" | 144" |
| | | | | For Shade Widths to 108" | 108" | 108" | 108" | 108" | 108" | 108" | 108" | 108" |
| | | | | For Shade Widths to 114" | 84" | 84" | 84" | 84" | 84" | 84" | 84" | 84" |
| | | | | For Shade Widths to 120" | 60" | 60" | 60" | 60" | 60" | 60" | 60" | 60" |
| Illusion | 72" | YES | NO | Non-Railroaded | | | | | | | | |
| | | | | Maximum Width | 72" | 62" | 62" | 72" | 72" | 72" | 72" | 72" |
| | | | | | Maximum Height | | | | | | | |
| | | | | For Shade Widths to 62" | 144" | 144" | 144" | 144" | 144" | 144" | 144" | 144" |
| | | | | For Shade Widths to 72" | 144" | NA | NA | 144" | 144" | 144" | 144" | 144" |
| | | | | Railroaded | | | | | | | | |
| | | | | Maximum Width | 120" | 120" | 120" | 120" | 120" | 120" | 120" | 120" |
| | | | | | Maximum Height | | | | | | | |
| | | | | For Shade Widths to max width | 60" | 60" | 60" | 60" | 60" | 60" | 60" | 60" |
| Jasper | 110" | YES | YES | Non-Railroaded | | | | | | | | |
| | | | | Maximum Width | 108" | 100" | 100" | 108" | 108" | 108" | 108" | 108" |
| | | | | | Maximum Height | | | | | | | |
| | | | | For Shade Widths to 84" | 144" | 144" | 144" | 144" | 144" | 144" | 144" | 144" |
| | | | | For Shade Widths to 90" | 138" | 138" | 138" | 138" | 138" | 138" | 138" | 138" |
| | | | | For Shade Widths to 96" | 108" | 108" | 108" | 108" | 108" | 108" | 108" | 108" |
| | | | | For Shade Widths to 100" | 84" | 84" | 84" | 84" | 84" | 84" | 84" | 84" |
| | | | | For Shade Widths over 100" | 66" | N/A | N/A | 66" | 66" | 66" | 66" | 66" |
| | | | | Railroaded | | | | | | | | |
| | | | | Maximum Width | 108" | 108" | 108" | 108" | 108" | 108" | 108" | 108" |
| | | | | | Maximum Height | | | | | | | |
| | | | | For Shade Widths to 84" | 144" | 144" | 144" | 144" | 144" | 144" | 144" | 144" |
| | | | | For Shade Widths to 90" | 138" | 138" | 138" | 138" | 138" | 138" | 138" | 138" |
| | | | | For Shade Widths over 96" | 108" | 108" | 108" | 108" | 108" | 108" | 108" | 108" |
| | | | | For Shade Widths over 96" | 66" | 66" | 66" | 66" | 66" | 66" | 66" | 66" |

**Minimum and Maximum Standards**

Please Note: Shade sizes that are wider than the fabric roll width indicated will be made with the fabric turned width for length (railroaded). The maximum width for non-railroaded shades is the roll width unless otherwise noted.

| Minimum: | Width | Height |
|---|---|---|
| ST30WF | 29" | 12" |

Fabrics turned width for length will have a visible seam when fabricated longer than their maximum roll width less 10". Fabrics turned width for length may have an edge curl. This is not considered a defect in the product.

| Material Name | Roll Width | Railroad Option | Splice /Seam | | Motorized Shade without Top Treament | Motorized Shade Deluxe Valance | Motorized Shade Fabric Valance | Motorized Shade with Medium Cassette | Motorized Shade with Large Cassette | Motorized Shade with 3" Fascia | Motorized Shade with 4" Fascia | Motorized Shade with Pocket Headrail |
|---|---|---|---|---|---|---|---|---|---|---|---|---|
| Linview | 122" | YES | YES | Non-Railroaded | | | | | | | | |
| | | | | Maximum Width | 108" | 108" | 108" | 108" | 108" | 108" | 108" | 108" |
| | | | | | Maximum Height | | | | | | | |
| | | | | For Shade Widths to 96" | 144" | 144" | 144" | 144" | 144" | 144" | 144" | 144" |
| | | | | For Shade Widths to 102" | 144" | 144" | 144" | 144" | 144" | 144" | 144" | 144" |
| | | | | For Shade Widths over 102" | 108" | 108" | 108" | 108" | 108" | 108" | 108" | 108" |
| | | | | Railroaded | | | | | | | | |
| | | | | Maximum Width | 108" | 108" | 108" | 108" | 108" | 108" | 108" | 108" |
| | | | | | Maximum Height | | | | | | | |
| | | | | For Shade Widths to 96" | 120" | 120" | 120" | 120" | 120" | 120" | 120" | 120" |
| | | | | For Shade Widths to 102" | 120" | 120" | 120" | 120" | 120" | 120" | 120" | 120" |
| | | | | For Shade Widths over 102" | 108" | 108" | 108" | 108" | 108" | 108" | 108" | 108" |
| Linview Blackout | 94" | NO | NO | Non-Railroaded | | | | | | | | |
| | | | | Maximum Width | 94" | 84" | 84" | 94" | 94" | 94" | 94" | 94" |
| | | | | | Maximum Height | | | | | | | |
| | | | | For Shade Widths to 84" | 144" | 144" | 144" | 144" | 144" | 144" | 144" | 144" |
| | | | | For Shade Widths to 90" | 138" | NA | NA | 138" | 138" | 138" | 138" | 138" |
| | | | | For Shade Widths over 90" | 108" | NA | NA | 108" | 108" | 108" | 108" | 108" |
| Montero | 94" | NO | NO | Non-Railroaded | | | | | | | | |
| | | | | Maximum Width | 94" | 84" | 84" | 94" | 94" | 94" | 94" | 94" |
| | | | | | Maximum Height | | | | | | | |
| | | | | For Shade Widths to 84" | 144" | 144" | 144" | 126" | 144" | 144" | 144" | 144" |
| | | | | For Shade Widths to 90" | 138" | NA | NA | 126" | 138" | 138" | 138" | 138" |
| | | | | For Shade Widths over 90" | 108" | NA | NA | 108" | 108" | 108" | 108" | 108" |
| Moravia | 96" | NO | NO | Non-Railroaded | | | | | | | | |
| | | | | Maximum Width | 96" | 86" | 86" | 96" | 96" | 96" | 96" | 96" |
| | | | | | Maximum Height | | | | | | | |
| | | | | For Shade Widths to 86" | 144" | 144" | 144" | 138" | 144" | 144" | 144" | 144" |
| | | | | For Shade Widths over 86" | 144" | NA | NA | 138" | 144" | 144" | 144" | 144" |
| Santa Cruz | 94" | NO | NO | Non-Railroaded | | | | | | | | |
| | | | | Maximum Width | 94" | 84" | 84" | 94" | 94" | 94" | 94" | 94" |
| | | | | | Maximum Height | | | | | | | |
| | | | | For Shade Widths to 84" | 144" | 144" | 144" | 138" | 144" | 144" | 144" | 144" |
| | | | | For Shade Widths to 90" | 138" | NA | NA | 138" | 138" | 138" | 138" | 138" |
| | | | | For Shade Widths over 90" | 108" | NA | NA | 108" | 108" | 108" | 108" | 108" |
| Santa Cruz Blackout | 94" | NO | NO | Non-Railroaded | | | | | | | | |
| | | | | Maximum Width | 94" | 84" | 84" | 94" | 94" | 94" | 94" | 94" |
| | | | | | Maximum Height | | | | | | | |
| | | | | For Shade Widths to 72" | 144" | 144" | 144" | 102" | 144" | 138" | 144" | 144" |
| | | | | For Shade Widths to 84" | 126" | 126" | 126" | 102" | 126" | 126" | 126" | 126" |
| | | | | For Shade Widths to 90" | 96" | NA | NA | 96" | 96" | 96" | 96" | 96" |
| | | | | For Shade Widths over 90" | 78" | NA | NA | 78" | 78" | 78" | 78" | 78" |
| Scala Blackout | 110" | YES | YES | Non-Railroaded | | | | | | | | |
| | | | | Maximum Width | 102" | 100" | 100" | 102" | 102" | 102" | 102" | 102" |
| | | | | | Maximum Height | | | | | | | |
| | | | | For Shade Widths to 84" | 144" | 144" | NA | 144" | 144" | 144" | 144" | 144" |
| | | | | For Shade Widths to 90" | 138" | 138" | NA | 138" | 138" | 138" | 138" | 138" |
| | | | | For Shade Widths to 96" | 108" | 108" | NA | 108" | 108" | 108" | 108" | 108" |
| | | | | For Shade Widths to 100" | 84" | 84" | NA | 84" | 84" | 84" | 84" | 84" |
| | | | | For Shade Widths to 102" | 84" | NA | NA | 84" | 84" | 84" | 84" | 84" |
| | | | | Railroaded | | | | | | | | |
| | | | | Maximum Width | 102" | 102" | 102" | 102" | 102" | 102" | 102" | 102" |
| | | | | | Maximum Height | | | | | | | |
| | | | | For Shade Widths to 84" | 144" | 144" | NA | 144" | 144" | 144" | 144" | 144" |
| | | | | For Shade Widths to 90" | 138" | 138" | NA | 138" | 138" | 138" | 138" | 138" |
| | | | | For Shade Widths to 96" | 108" | 108" | NA | 108" | 108" | 108" | 108" | 108" |
| | | | | For Shade Widths to 102" | 84" | 84" | NA | 84" | 84" | 84" | 84" | 84" |

**Minimum and Maximum Standards**

Please Note: Shade sizes that are wider than the fabric roll width indicated will be made with the fabric turned width for length (railroaded). The maximum width for non-railroaded shades is the roll width unless otherwise noted.

| Minimum: | Width | Height |
|---|---|---|
| ST30WF | 29" | 12" |

Fabrics turned width for length will have a visible seam when fabricated longer than their maximum roll width less 10". Fabrics turned width for length may have an edge curl. This is not considered a defect in the product.

| Material Name | Roll Width | Railroad Option | Splice /Seam | | Motorized Shade without Top Treament | Motorized Shade Deluxe Valance | Motorized Shade Fabric Valance | Motorized Shade with Medium Cassette | Motorized Shade with Large Cassette | Motorized Shade with 3" Fascia | Motorized Shade with 4" Fascia | Motorized Shade with Pocket Headrail |
|---|---|---|---|---|---|---|---|---|---|---|---|---|
| Sheerweave 7200R | 118" | NO | NO | Non-Railroaded | | | | | | | | |
| | | | | Maximum Width | 102" | 102" | 102" | 102" | 102" | 102" | 102" | 102" |
| | | | | | Maximum Height | | | | | | | |
| | | | | For Shade Widths to 66" | 144" | 144" | 144" | 114" | 144" | 144" | 144" | 144" |
| | | | | For Shade Widths to 72" | 144" | 144" | 144" | 114" | 144" | 144" | 144" | 144" |
| | | | | For Shade Widths to 78" | 144" | 144" | 144" | 114" | 144" | 144" | 144" | 144" |
| | | | | For Shade Widths to 84" | 144" | 144" | 144" | 114" | 144" | 144" | 144" | 144" |
| | | | | For Shade Widths to 90" | 138" | 138" | 138" | 114 | 138" | 138" | 138" | 138" |
| | | | | For Shade Widths to 96" | 108" | 108" | 108" | 108" | 108" | 108" | 108" | 108" |
| | | | | For Shade Widths to 102" | 84" | 84" | 84" | 84" | 84" | 84" | 84" | 84" |
| Sheerweave 7250R | 118" | NO | NO | Non-Railroaded | | | | | | | | |
| | | | | Maximum Width | 96" | 96" | 96" | 96" | 96" | 96" | 96" | 96" |
| | | | | | Maximum Height | | | | | | | |
| | | | | For Shade Widths to 96" | 120" | 120" | 120" | 120" | 120" | 120" | 120" | 120" |
| Sheerweave 7400 | 118" | NO | NO | Non-Railroaded | | | | | | | | |
| | | | | Maximum Width | 96" | 96" | 96" | 96" | 96" | 96" | 96" | 96" |
| | | | | | Maximum Height | | | | | | | |
| | | | | For Shade Widths to 54" | 144" | 132" | 132" | 84" | 132" | 114" | 144" | 144" |
| | | | | For Shade Widths to 60" | 144" | 132" | 132" | 84" | 132" | 114" | 144" | 144" |
| | | | | For Shade Widths to 66" | 144" | 132" | 132" | 84" | 132" | 114" | 144" | 144" |
| | | | | For Shade Widths to 72" | 144" | 132" | 132" | 84" | 132" | 114" | 144" | 144" |
| | | | | For Shade Widths to 78" | 144" | 132" | 132" | 84" | 132" | 114" | 144" | 144" |
| | | | | For Shade Widths to 84" | 126" | 126" | 126" | 84" | 126" | 114" | 126" | 126" |
| | | | | For Shade Widths to 90" | 96" | 96" | 96" | 84" | 96" | 96" | 96" | 96" |
| | | | | For Shade Widths to 96" | 78" | 78" | 78" | 78" | 78" | 78" | 78" | 78" |
| Sheerweave 7450 | 118" | NO | NO | Non-Railroaded | | | | | | | | |
| | | | | Maximum Width | 108" | 108" | 108" | 108" | 108" | 108" | 108" | 108" |
| | | | | | Maximum Height | | | | | | | |
| | | | | For Shade Widths to 96" | 144" | 144" | 144" | 132" | 144" | 144" | 144" | 144" |
| | | | | For Shade Widths to 102" | 144" | 144" | 144" | 132" | 144" | 144" | 144" | 144" |
| | | | | For Shade Widths to 108" | 108" | 108" | 108" | 108" | 108" | 108" | 108" | 108" |
| Sheerweave 7500 | 118" | NO | NO | Non-Railroaded | | | | | | | | |
| | | | | Maximum Width | 96" | 96" | NA | 96" | 96" | 96" | 96" | 96" |
| | | | | | Maximum Height | | | | | | | |
| | | | | For Shade Widths to 66" | 120" | 120" | NA | 120" | 120" | 120" | 120" | 120" |
| | | | | For Shade Widths to 72" | 120" | 120" | NA | 120" | 120" | 120" | 120" | 120" |
| | | | | For Shade Widths to 78" | 120" | 120" | NA | 120" | 120" | 120" | 120" | 120" |
| | | | | For Shade Widths to 84" | 120" | 120" | NA | 120" | 120" | 120" | 120" | 120" |
| | | | | For Shade Widths to 90" | 120" | 120" | NA | 120" | 120" | 120" | 120" | 120" |
| | | | | For Shade Widths to 96" | 108" | 108" | NA | 108" | 108" | 108" | 108" | 108" |
| Sheerweave 7500R | 118" | NO | NO | Non-Railroaded | | | | | | | | |
| | | | | Maximum Width | 102" | 102" | NA | 102" | 102" | 102" | 102" | 102" |
| | | | | | Maximum Height | | | | | | | |
| | | | | For Shade Widths to 66" | 144" | 144" | NA | 144" | 144" | 144" | 144" | 144" |
| | | | | For Shade Widths to 72" | 144" | 144" | NA | 144" | 144" | 144" | 144" | 144" |
| | | | | For Shade Widths to 78" | 144" | 144" | NA | 144" | 144" | 144" | 144" | 144" |
| | | | | For Shade Widths to 84" | 144" | 144" | NA | 144" | 144" | 144" | 144" | 144" |
| | | | | For Shade Widths to 90" | 138" | 138" | NA | 138" | 138" | 138" | 138" | 138" |
| | | | | For Shade Widths to 96" | 108" | 108" | NA | 108" | 108" | 108" | 108" | 108" |
| | | | | For Shade Widths to 102" | 84" | 84" | NA | 84" | 84" | 84" | 84" | 84" |
| Sheerweave 7600 | 118" | NO | NO | Non-Railroaded | | | | | | | | |
| | | | | Maximum Width | 102" | 102" | 102" | 102" | 102" | 102" | 102" | 102" |
| | | | | | Maximum Height | | | | | | | |
| | | | | For Shade Widths to 66" | 144" | 144" | 144" | 126" | 144" | 144" | 144" | 144" |
| | | | | For Shade Widths to 72" | 144" | 144" | 144" | 126" | 144" | 144" | 144" | 144" |
| | | | | For Shade Widths to 78" | 144" | 144" | 144" | 126" | 144" | 144" | 144" | 144" |
| | | | | For Shade Widths to 84" | 144" | 144" | 144" | 126" | 144" | 144" | 144" | 144" |
| | | | | For Shade Widths to 90" | 138" | 138" | 138" | 126" | 138" | 138" | 138" | 138" |
| | | | | For Shade Widths to 96" | 108" | 108" | 108" | 108" | 108" | 108" | 108" | 108" |
| | | | | For Shade Widths to 102" | 84" | 84" | 84" | 84" | 84" | 84" | 84" | 84" |
| Sheerweave 7650 | 118" | NO | NO | Non-Railroaded | | | | | | | | |
| | | | | Maximum Width | 108" | 108" | 108" | 108" | 108" | 108" | 108" | 108" |
| | | | | | Maximum Height | | | | | | | |
| | | | | For Shade Widths to 96" | 144" | 144" | 144" | 144" | 144" | 144" | 144" | 144" |
| | | | | For Shade Widths to 102" | 144" | 144" | 144" | 144" | 144" | 144" | 144" | 144" |
| | | | | For Shade Widths to 108" | 108" | 108" | 108" | 108" | 108" | 108" | 108" | 108" |
| Sheerweave 7700R | 118" | NO | NO | Non-Railroaded | | | | | | | | |
| | | | | Maximum Width | 96" | 96" | 96" | 96" | 96" | 96" | 96" | 96" |
| | | | | | Maximum Height | | | | | | | |
| | | | | For Shade Widths to 72" | 144" | 144" | 144" | 96" | 144" | 132" | 144" | 144" |
| | | | | For Shade Widths to 78" | 144" | 144" | 144" | 96" | 144" | 132" | 144" | 144" |
| | | | | For Shade Widths to 84" | 126" | 126" | 126" | 96" | 126" | 126" | 126" | 126" |
| | | | | For Shade Widths to 90" | 96" | 96" | 96" | 96" | 96" | 96" | 96" | 96" |
| | | | | For Shade Widths to 96" | 78" | 78" | 78" | 78" | 78" | 78" | 78" | 78" |

**Minimum and Maximum Standards**

Please Note: Shade sizes that are wider than the fabric roll width indicated will be made with the fabric turned width for length (railroaded). The maximum width for non-railroaded shades is the roll width unless otherwise noted.

| Minimum: | Width | Height |
|---|---|---|
| ST30WF | 29" | 12" |

Fabrics turned width for length will have a visible seam when fabricated longer than their maximum roll width less 10". Fabrics turned width for length may have an edge curl. This is not considered a defect in the product.

| Material Name | Roll Width | Railroad Option | Splice /Seam | | Motorized Shade without Top Treament | Motorized Shade Deluxe Valance | Motorized Shade Fabric Valance | Motorized Shade with Medium Cassette | Motorized Shade with Large Cassette | Motorized Shade with 3" Fascia | Motorized Shade with 4" Fascia | Motorized Shade with Pocket Headrail |
|---|---|---|---|---|---|---|---|---|---|---|---|---|
| Sheerweave 7750R | 118" | NO | NO | Non-Railroaded | | | | | | | | |
| | | | | Maximum Width | 98" | 98" | 98" | 98" | 98" | 98" | 98" | 98" |
| | | | | | Maximum Height | | | | | | | |
| | | | | For Shade Widths to 66" | 120" | 120" | 120" | 120" | 120" | 120" | 120" | 120" |
| | | | | For Shade Widths to 72" | 120" | 120" | 120" | 120" | 120" | 120" | 120" | 120" |
| | | | | For Shade Widths to 78" | 120" | 120" | 120" | 120" | 120" | 120" | 120" | 120" |
| | | | | For Shade Widths to 84" | 120" | 120" | 120" | 120" | 120" | 120" | 120" | 120" |
| | | | | For Shade Widths to 90" | 120" | 120" | 120" | 120" | 120" | 120" | 120" | 120" |
| | | | | For Shade Widths to 96" | 108" | 108" | 108" | 108" | 108" | 108" | 108" | 108" |
| | | | | For Shade Widths to 98" | 84" | 84" | 84" | 84" | 84" | 84" | 84" | 84" |
| Sorrento | 108" | NO | NO | Non-Railroaded | | | | | | | | |
| | | | | Maximum Width | 108" | 98" | 98" | 108" | 108" | 108" | 108" | 108" |
| | | | | | Maximum Height | | | | | | | |
| | | | | For Shade Widths to 96" | 144" | 144" | 144" | 108" | 144" | 144" | 144" | 144" |
| | | | | For Shade Widths over 96" | 108" | 108" | 108" | 108" | 108" | 108" | 108" | 108" |
| Sunscreen (SW) 7000 | 118" | YES | YES | Non-Railroaded | | | | | | | | |
| | | | | Maximum Width | 102" | 102" | 102" | 102" | 102" | 102" | 102" | 102" |
| | | | | | Maximum Height | | | | | | | |
| | | | | For Shade Widths to 72" | 144" | 144" | 144" | 96" | 144" | 132" | 144" | 144" |
| | | | | For Shade Widths to 84" | 126" | 126" | 126" | 96" | 126" | 126" | 126" | 126" |
| | | | | For Shade Widths to 90" | 96" | 96" | 96" | 96" | 96" | 96" | 96" | 96" |
| | | | | For Shade Widths to 96" | 78" | 78" | 78" | 78" | 78" | 78" | 78" | 78" |
| | | | | For Shade Widths over 96" | 60" | 60" | 60" | 60" | 60" | 60" | 60" | 60" |
| | | | | Railroaded | | | | | | | | |
| | | | | Maximum Width | 102" | 102" | 102" | 102" | 102" | 102" | 102" | 102" |
| | | | | | Maximum Height | | | | | | | |
| | | | | For Shade Widths to 72" | 144" | 144" | 144" | 96" | 144" | 132" | 144" | 144" |
| | | | | For Shade Widths to 84" | 126" | 126" | 126" | 96" | 126" | 126" | 126" | 126" |
| | | | | For Shade Widths to 90" | 96" | 96" | 96" | 96" | 96" | 96" | 96" | 96" |
| | | | | For Shade Widths to 96" | 78" | 78" | 78" | 78" | 78" | 78" | 78" | 78" |
| | | | | For Shade Widths over 96" | 60" | 60" | 60" | 60" | 60" | 60" | 60" | 60" |
| Tundra | 94" | NO | NO | Non-Railroaded | | | | | | | | |
| | | | | Maximum Width | 94" | 84" | 84" | 94" | 94" | 94" | 94" | 94" |
| | | | | | Maximum Height | | | | | | | |
| | | | | For Shade Widths to 84" | 144" | 144" | 144" | 144" | 144" | 144" | 144" | 144" |
| | | | | For Shade Widths to 90" | 144" | N/A | N/A | 144" | 144" | 144" | 144" | 144" |
| | | | | For Shade Widths to 94" | 144" | N/A | N/A | 144" | 144" | 144" | 144" | 144" |
| Tundra Blackout | 94" | NO | NO | Non-Railroaded | | | | | | | | |
| | | | | Maximum Width | 94" | 84" | 84" | 94" | 94" | 94" | 94" | 94" |
| | | | | | Maximum Height | | | | | | | |
| | | | | For Shade Widths to 66" | 120" | 120" | 120" | 120" | 120" | 120" | 120" | 120" |
| | | | | For Shade Widths to 72" | 120" | 120" | 120" | 120" | 120" | 120" | 120" | 120" |
| | | | | For Shade Widths to 78" | 120" | 120" | 120" | 120" | 120" | 120" | 120" | 120" |
| | | | | For Shade Widths to 84" | 120" | 120" | 120" | 120" | 120" | 120" | 120" | 120" |
| | | | | For Shade Widths to 90" | 120" | NA | NA | 120" | 120" | 120" | 120" | 120" |
| | | | | For Shade Widths to 94" | 108" | NA | NA | 108" | 108" | 108" | 108" | 108" |
| Uptown *(R79_02)* | 78" | YES | NO | Non-Railroaded | | | | | | | | |
| | | | | Maximum Width | 78" | 68" | 68" | 78" | 78" | 78" | 78" | 78" |
| | | | | | Maximum Height | | | | | | | |
| | | | | For Shade Widths to 68" | 144" | 144" | 144" | 144" | 144" | 144" | 144" | 144" |
| | | | | For Shade Widths to 78" | 144" | NA | NA | 144" | 144" | 144" | 144" | 144" |
| | | | | Railroaded | | | | | | | | |
| | | | | Maximum Width | 120" | 120" | 120" | 120" | 120" | 120" | 120" | 120" |
| | | | | | Maximum Height | | | | | | | |
| | | | | For Shade Widths to 102" | 66" | 66" | 66" | 66" | 66" | 66" | 66" | 66" |
| | | | | For Shade Widths over 102" | 60" | 60" | 60" | 60" | 60" | 60" | 60" | 60" |
| | | | | Non-Railroaded | | | | | | | | |
| Uptown Room Darkening *(R79_01)* | 78" | YES | NO | Maximum Width | 78" | 68" | 68" | 78" | 78" | 78" | 78" | 78" |
| | | | | | Maximum Height | | | | | | | |
| | | | | For Shade Widths to 68" | 144" | 144" | 144" | 144" | 144" | 144" | 144" | 144" |
| | | | | For Shade Widths to 78" | 144" | NA | NA | 144" | 144" | 144" | 144" | 144" |
| | | | | Railroaded | | | | | | | | |
| | | | | Maximum Width | 108" | 108" | 108" | 108" | 108" | 108" | 144" | 108" |
| | | | | | Maximum Height | | | | | | | |
| | | | | For Shade Widths to max width | 66" | 66" | 66" | 66" | 66" | 66" | 66" | 66" |

**Minimum and Maximum Standards**

Please Note: Shade sizes that are wider than the fabric roll width indicated will be made with the fabric turned width for length (railroaded). The maximum width for non-railroaded shades is the roll width unless otherwise noted.

| Minimum: | Width | Height |
|---|---|---|
| ST30WF | 29" | 12" |

Fabrics turned width for length will have a visible seam when fabricated longer than their maximum roll width less 10". Fabrics turned width for length may have an edge curl. This is not considered a defect in the product.

| Material Name | Roll Width | Railroad Option | Splice /Seam | | Motorized Shade without Top Treament | Motorized Shade Deluxe Valance | Motorized Shade Fabric Valance | Motorized Shade with Medium Cassette | Motorized Shade with Large Cassette | Motorized Shade with 3" Fascia | Motorized Shade with 4" Fascia | Motorized Shade with Pocket Headrail |
|---|---|---|---|---|---|---|---|---|---|---|---|---|
| World Textures 1 | 78" | YES | YES | Non-Railroaded | | | | | | | | |
| | | | | Maximum Width | 78" | 68" | 68" | 78" | 78" | 78" | 78" | 78" |
| | | | | | Maximum Height | | | | | | | |
| | | | | For Shade Widths to 68" | 144" | 144" | 144" | 138" | 144" | 144" | 144" | 144" |
| | | | | For Shade Widths to 78" | 144" | NA | NA | 138" | 144" | 144" | 144" | 144" |
| | | | | Railroaded | | | | | | | | |
| | | | | Maximum Width | 108" | 108" | 108" | 108" | 108" | 108" | 108" | 108" |
| | | | | | Maximum Height | | | | | | | |
| | | | | For Shade Widths to 84" | 144" | 144" | 144" | 138" | 144" | 144" | 144" | 144" |
| | | | | For Shade Widths to 90" | 138" | 138" | 138" | 138" | 138" | 138" | 138" | 138" |
| | | | | For Shade Widths to 96" | 108" | 108" | 108" | 108" | 108" | 108" | 108" | 108" |
| | | | | For Shade Widths to 102" | 84" | 84" | 84" | 84" | 84" | 84" | 84" | 84" |
| | | | | For Shade Widths over 102" | 66" | 66" | 66" | 66" | 66" | 66" | 66" | 66" |
| World Textures 1 Blackout *(R50_01)* | 78" | YES | YES | Non-Railroaded | | | | | | | | |
| | | | | Maximum Width | 78" | 68" | 68" | 78" | 78" | 78" | 78" | 78" |
| | | | | | Maximum Height | | | | | | | |
| | | | | For Shade Widths to 68" | 144" | 144" | 144" | 114" | 144" | 144" | 144" | 144" |
| | | | | For Shade Widths to 78" | 144" | NA | NA | 114" | 144" | 144" | 144" | 144" |
| | | | | Railroaded | | | | | | | | |
| | | | | Maximum Width | 102" | 102" | 102" | 102" | 102" | 102" | 102" | 102" |
| | | | | | Maximum Height | | | | | | | |
| | | | | For Shade Widths to 84" | 144" | 144" | 144" | 108" | 144" | 144" | 144" | 144" |
| | | | | For Shade Widths to 90" | 138" | 138" | 138" | 108" | 138" | 138" | 138" | 138" |
| | | | | For Shade Widths to 96" | 108" | 108" | 108" | 108" | 108" | 108" | 108" | 108" |
| | | | | For Shade Widths to 102" | 84" | 84" | 84" | 84" | 84" | 84" | 84" | 84" |
| World Textures 2 | 80" | YES | YES | Non-Railroaded | | | | | | | | |
| | | | | Maximum Width | 80" | 70" | 70" | 80" | 80" | 80" | 80" | 80" |
| | | | | | Maximum Height | | | | | | | |
| | | | | For Shade Widths to 70" | 144" | 138" | 138" | 84" | 138" | 120" | 144" | 144" |
| | | | | For Shade Widths to 80" | 144" | NA | NA | 84" | 138" | 120" | 144" | 144" |
| | | | | Railroaded | | | | | | | | |
| | | | | Maximum Width | 102" | 102" | 102" | 102" | 102" | 102" | 102" | 102" |
| | | | | | Maximum Height | | | | | | | |
| | | | | For Shade Widths to 84" | 144" | 138" | 138" | 84" | 138" | 120" | 144" | 144" |
| | | | | For Shade Widths to 90" | 138" | 138" | 138" | 84" | 138" | 120" | 138" | 138" |
| | | | | For Shade Widths to 96" | 108" | 108" | 108" | 84" | 108" | 108" | 108" | 108" |
| | | | | For Shade Widths to 102" | 84" | 84" | 84" | 84" | 84" | 84" | 84" | 84" |
| World Textures 2 Blackout *(R50_04,05)* | 80" | YES | YES | Non-Railroaded | | | | | | | | |
| | | | | Maximum Width | 80" | 70" | 70" | 80" | 80" | 80" | 80" | 80" |
| | | | | | Maximum Height | | | | | | | |
| | | | | For Shade Widths to 70" | 144" | 144" | 144" | 114" | 144" | 144" | 144" | 144" |
| | | | | For Shade Widths to 80" | 144" | NA | NA | 114" | 144" | 144" | 144" | 144" |
| | | | | Railroaded | | | | | | | | |
| | | | | Maximum Width | 102" | 102" | 102" | 102" | 102" | 102" | 102" | 102" |
| | | | | | Maximum Height | | | | | | | |
| | | | | For Shade Widths to 84" | 144" | 144" | 144" | 114" | 144" | 144" | 144" | 144" |
| | | | | For Shade Widths to 90" | 138" | 138" | 138" | 114" | 138" | 138" | 138" | 138" |
| | | | | For Shade Widths to 96" | 108" | 108" | 108" | 108" | 108" | 108" | 108" | 108" |
| | | | | For Shade Widths to 102" | 84" | 84" | 84" | 84" | 84" | 84" | 84" | 84" |

# PRODUCT SIZE SPECIFICATIONS – HARDWIRED MOTORIZATION

## Minimum and Maximum Standards

Please Note: Shade sizes that are wider than the fabric roll width indicated will be made with the fabric turned width for length (railroaded). The maximum width for non-railroaded shades is the roll width unless otherwise noted.

Fabrics turned width for length will have a visible seam when fabricated longer than their maximum roll width less 10". Fabrics turned width for length may have an edge curl. This is not considered a defect in the product.

| Motor Type | Motor Name | Min Width | Min Height | Weight Capacity |
|---|---|---|---|---|
| 24v Low-Voltage | ST-30 Quiet | 18-1/2" | 12" | Lifts up to 23 lbs. |
| 110v Hardwired | ST-50 Quiet | 33" | 12" | Lifts up to 52 lbs. |
| 110v Hardwired | ST-50 Ultra Quiet | 39" | 12" | Lifts up to 52 lbs. |

Note: 110v Motorized shades are available without top treatment, with 4" R-series Fascia, or with Pocket. Maximum width for each coupled shade is 120" and maximum overall width is 216". 4" R-series Fascia & Pocket will spliced in the center when width exceed 190".

| Material Name | Roll Width | Railroad Option | Splice /Seam | | Motorized Shade without Top Treament | | Motorized Shade Deluxe Valance | Motorized Shade Fabric Valance | Motorized Shade with Medium Cassette | Motorized Shade with Large Cassette | Motorized Shade with 3" Fascia | Motorized Shade with 4" Fascia | | Motorized Shade with Pocket Headrail | |
|---|---|---|---|---|---|---|---|---|---|---|---|---|---|---|---|
| | | | | | 24v | 110v | 24v | 24v | 24v | 24v | 24v | 24v | 110v | 24v | 110v |
| 1% E Screen | 122" | YES | YES | Non-Railroaded | | | | | | | | | | | |
| | | | | Maximum Width | 102" | 122" | 102" | 102" | 102" | 102" | 102" | 102" | 122" | 102" | 122" |
| | | | | | Maximum Height | | | | | | | | | | |
| | | | | For Shade Widths to 84" | 144" | 144" | 144" | 144" | 138" | 144" | 144" | 144" | 144" | 144" | 144" |
| | | | | For Shade Widths to 90" | 138" | 144" | 138" | 138" | 138" | 138" | 138" | 138" | 144" | 138" | 144" |
| | | | | For Shade Widths to 96" | 108" | 144" | 108" | 108" | 108" | 108" | 108" | 108" | 144" | 108" | 144" |
| | | | | For Shade Widths to 102" | 84" | 144" | 84" | 84" | 84" | 84" | 84" | 84" | 144" | 84" | 144" |
| | | | | For Shade Widths over 102" | NA | 144" | NA | NA | NA | NA | NA | NA | 144" | NA | 144" |
| | | | | Railroaded | | | | | | | | | | | |
| | | | | Maximum Width | 102" | 144" | 102" | 102" | 102" | 102" | 102" | 102" | 144" | 102" | 144" |
| | | | | | Maximum Height | | | | | | | | | | |
| | | | | For Shade Widths to 84" | 144" | 144" | 144" | 144" | 138" | 144" | 144" | 144" | 144" | 144" | 144" |
| | | | | For Shade Widths to 90" | 138" | 144" | 138" | 138" | 138" | 138" | 138" | 138" | 144" | 138" | 144" |
| | | | | For Shade Widths to 96" | 108" | 144" | 108" | 108" | 108" | 108" | 108" | 108" | 144" | 108" | 144" |
| | | | | For Shade Widths to 102" | 84" | 144" | 84" | 84" | 84" | 84" | 84" | 84" | 144" | 84" | 144" |
| | | | | For Shade Widths over 102" | NA | 144" | NA | NA | NA | NA | NA | NA | 144" | NA | 144" |
| 1% Sheerweave 2500 | 126" | YES | YES | Non-Railroaded | | | | | | | | | | | |
| | | | | Maximum Width | 96" | 126" | 96" | 96" | 96" | 96" | 96" | 96" | 126" | 96" | 126" |
| | | | | | Maximum Height | | | | | | | | | | |
| | | | | For Shade Widths to 78" | 144" | 144" | 144" | 144" | 114" | 144" | 144" | 144" | 144" | 144" | 144" |
| | | | | For Shade Widths to 84" | 126" | 144" | 126" | 126" | 114" | 126" | 126" | 126" | 144" | 126" | 144" |
| | | | | For Shade Widths to 90" | 96" | 144" | 96" | 96" | 96" | 96" | 96" | 96" | 144" | 96" | 144" |
| | | | | For Shade Widths to 96" | 78" | 144" | 78" | 78" | 78" | 78" | 78" | 78" | 144" | 78" | 144" |
| | | | | For Shade Widths over 96" | NA | 144" | NA | NA | NA | NA | NA | NA | 144" | NA | 118" |
| | | | | Railroaded | | | | | | | | | | | |
| | | | | Maximum Width | 96" | 144" | 96" | 96" | 96" | 96" | 96" | 96" | 144" | 96" | 144" |
| | | | | | Maximum Height | | | | | | | | | | |
| | | | | For Shade Widths to 78" | 144" | 144" | 144" | 144" | 114" | 144" | 144" | 144" | 144" | 144" | 144" |
| | | | | For Shade Widths to 84" | 126" | 144" | 126" | 126" | 114" | 126" | 126" | 126" | 144" | 126" | 144" |
| | | | | For Shade Widths to 90" | 96" | 144" | 96" | 96" | 96" | 96" | 96" | 96" | 144" | 96" | 144" |
| | | | | For Shade Widths to 96" | 78" | 144" | 78" | 78" | 78" | 78" | 78" | 78" | 144" | 78" | 144" |
| | | | | For Shade Widths over 96" | NA | 144" | NA | NA | NA | NA | NA | NA | 144" | NA | 118" |
| 1% Sheerweave 2701 | 126" | YES | YES | Non-Railroaded | | | | | | | | | | | |
| | | | | Maximum Width | 102" | 126" | 102" | 102" | 102" | 102" | 102" | 102" | 126" | 102" | 126" |
| | | | | | Maximum Height | | | | | | | | | | |
| | | | | For Shade Widths to 72" | 144" | 144" | 144" | 144" | 138" | 144" | 144" | 144" | 144" | 144" | 144" |
| | | | | For Shade Widths to 84" | 126" | 144" | 126" | 126" | 126" | 126" | 126" | 126" | 144" | 126" | 144" |
| | | | | For Shade Widths to 90" | 96" | 144" | 96" | 96" | 96" | 96" | 96" | 96" | 144" | 96" | 144" |
| | | | | For Shade Widths to 96" | 78" | 144" | 78" | 78" | 78" | 78" | 78" | 78" | 144" | 78" | 144" |
| | | | | For Shade Widths over 96" | 60" | 144" | 60" | 60" | 60" | 60" | 60" | 60" | 144" | 60" | 144" |
| | | | | Railroaded | | | | | | | | | | | |
| | | | | Maximum Width | 102" | 144" | 102" | 102" | 102" | 102" | 102" | 102" | 144" | 102" | 144" |
| | | | | | Maximum Height | | | | | | | | | | |
| | | | | For Shade Widths to 72" | 144" | 144" | 144" | 144" | 138" | 144" | 144" | 144" | 144" | 144" | 144" |
| | | | | For Shade Widths to 84" | 126" | 144" | 126" | 126" | 126" | 126" | 126" | 126" | 144" | 126" | 144" |
| | | | | For Shade Widths to 90" | 96" | 144" | 96" | 96" | 96" | 96" | 96" | 96" | 144" | 96" | 144" |
| | | | | For Shade Widths to 96" | 78" | 144" | 78" | 78" | 78" | 78" | 78" | 78" | 144" | 78" | 144" |
| | | | | For Shade Widths over 96" | 60" | 144" | 60" | 60" | 60" | 60" | 60" | 60" | 144" | 60" | 144" |
| 1% Sheerweave 4901 | 98" | NO | NO | Non-Railroaded | | | | | | | | | | | |
| | | | | Maximum Width | 96" | 98" | 88" | 88" | 96" | 96" | 96" | 96" | 98" | 96" | 98" |
| | | | | | Maximum Height | | | | | | | | | | |
| | | | | For Shade Widths to 54" | 144" | 144" | 144" | 144" | 96" | 144" | 126" | 144" | 144" | 144" | 144" |
| | | | | For Shade Widths to 60" | 144" | 144" | 144" | 144" | 96" | 144" | 126" | 144" | 144" | 144" | 144" |
| | | | | For Shade Widths to 66" | 144" | 144" | 144" | 144" | 96" | 144" | 126" | 144" | 144" | 144" | 144" |
| | | | | For Shade Widths to 72" | 144" | 144" | 144" | 144" | 96" | 144" | 126" | 144" | 144" | 144" | 144" |
| | | | | For Shade Widths to 78" | 144" | 144" | 144" | 144" | 96" | 144" | 126" | 144" | 144" | 144" | 144" |
| | | | | For Shade Widths to 84" | 126" | 144" | 126" | 126" | 96" | 126" | 126" | 126" | 144" | 126" | 144" |
| | | | | For Shade Widths to 88" | 96" | 144" | 96" | 96" | 96" | 96" | 96" | 96" | 144" | 96" | 144" |
| | | | | For Shade Widths to 90" | 96" | 144" | N/A | N/A | 96" | 96" | 96" | 96" | 144" | 96" | 144" |
| | | | | For Shade Widths to 96" | 78" | 144" | N/A | N/A | 78" | 78" | 78" | 78" | 144" | 78" | 144" |
| | | | | For Shade Widths to 98" | NA | 144" | N/A | N/A | NA | NA | NA | NA | 144" | NA | 144" |

# PRODUCT SIZE SPECIFICATIONS – HARDWIRED MOTORIZATION

## Minimum and Maximum Standards

Please Note: Shade sizes that are wider than the fabric roll width indicated will be made with the fabric turned width for length (railroaded). The maximum width for non-railroaded shades is the roll width unless otherwise noted.

Fabrics turned width for length will have a visible seam when fabricated longer than their maximum roll width less 10". Fabrics turned width for length may have an edge curl. This is not considered a defect in the product.

| Motor Type | Motor Name | Min Width | Min Height | Weight Capacity |
|---|---|---|---|---|
| 24v Low-Voltage | ST-30 Quiet | 18-1/2" | 12" | Lifts up to 23 lbs. |
| 110v Hardwired | ST-50 Quiet | 33" | 12" | Lifts up to 52 lbs. |
| 110v Hardwired | ST-50 Ultra Quiet | 39" | 12" | Lifts up to 52 lbs. |

Note: 110v Motorized shades are available without top treatment, with 4" R-series Fascia, or with Pocket. Maximum width for each coupled shade is 120" and maximum overall width is 216". 4" R-series Fascia & Pocket will spliced in the center when width exceed 190".

| Material Name | Roll Width | Railroad Option | Splice /Seam | | Motorized Shade without Top Treament | | Motorized Shade Deluxe Valance | Motorized Shade Fabric Valance | Motorized Shade with Medium Cassette | Motorized Shade with Large Cassette | Motorized Shade with 3" Fascia | Motorized Shade with 4" Fascia | | Motorized Shade with Pocket Headrail | |
|---|---|---|---|---|---|---|---|---|---|---|---|---|---|---|---|
| | | | | | 24v | 110v | 24v | 24v | 24v | 24v | 24v | 24v | 110v | 24v | 110v |
| 1% Sheerweave 5000 | 98" | NO | NO | Non-Railroaded | | | | | | | | | | | |
| | | | | Maximum Width | 96" | 96" | 86" | 86" | 96" | 96" | 96" | 96" | 96" | 96" | 96" |
| | | | | | Maximum Height | | | | | | | | | | |
| | | | | For Shade Widths to 78" | 144" | 144" | 84" | 84" | 55" | 84" | 72" | 144" | 144" | 126" | 90" |
| | | | | For Shade Widths to 84" | 126" | 144" | 84" | 84" | 55" | 84" | 72" | 126" | 144" | 126" | 90" |
| | | | | For Shade Widths to 86" | 96" | 144" | 84" | 84" | 55" | 84" | 72" | 96" | 144" | 96" | 90" |
| | | | | For Shade Widths to 90" | 96" | 144" | NA | NA | 55" | 84" | 72" | 96" | 144" | 96" | 90" |
| | | | | For Shade Widths to 96" | 78" | 144" | NA | NA | 55" | 78" | 72" | 78" | 144" | 78" | 90" |
| 1% Toka | 118" | YES | YES | Non-Railroaded | | | | | | | | | | | |
| | | | | Maximum Width | 102" | 118" | 102" | 102" | 102" | 102" | 102" | 102" | 118" | 102" | 118" |
| | | | | | Maximum Height | | | | | | | | | | |
| | | | | For Shade Widths to 72" | 144" | 144" | 144" | 144" | 96" | 144" | 132" | 144" | 144" | 144" | 144" |
| | | | | For Shade Widths to 84" | 126" | 144" | 126" | 126" | 96" | 126" | 126" | 126" | 144" | 126" | 144" |
| | | | | For Shade Widths to 90" | 96" | 144" | 96" | 96" | 96" | 96" | 96" | 96" | 144" | 96" | 144" |
| | | | | For Shade Widths to 96" | 78" | 144" | 78" | 78" | 78" | 78" | 78" | 78" | 144" | 78" | 144" |
| | | | | For Shade Widths over 96" | 60" | 144" | 60" | 60" | 60" | 60" | 60" | 60" | 144" | 60" | 114" |
| | | | | Railroaded | | | | | | | | | | | |
| | | | | Maximum Width | 102" | 144" | 102" | 102" | 102" | 102" | 102" | 102" | 144" | 102" | 144" |
| | | | | | Maximum Height | | | | | | | | | | |
| | | | | For Shade Widths to 72" | 144" | 144" | 144" | 144" | 96" | 144" | 132" | 144" | 144" | 144" | 144" |
| | | | | For Shade Widths to 84" | 126" | 144" | 126" | 126" | 96" | 126" | 126" | 126" | 144" | 126" | 144" |
| | | | | For Shade Widths to 90" | 96" | 144" | 96" | 96" | 96" | 96" | 96" | 96" | 144" | 96" | 144" |
| | | | | For Shade Widths to 96" | 78" | 144" | 78" | 78" | 78" | 78" | 78" | 78" | 144" | 78" | 144" |
| | | | | For Shade Widths over 96" | 60" | 144" | 60" | 60" | 60" | 60" | 60" | 60" | 144" | 60" | 102" |
| 3% E Screen | 122" | YES | YES | Non-Railroaded | | | | | | | | | | | |
| | | | | Maximum Width | 102" | 122" | 102" | 102" | 102" | 102" | 102" | 102" | 122" | 102" | 122" |
| | | | | | Maximum Height | | | | | | | | | | |
| | | | | For Shade Widths to 84" | 144" | 144" | 144" | 144" | 144" | 144" | 144" | 144" | 144" | 144" | 144" |
| | | | | For Shade Widths to 90" | 138" | 144" | 138" | 138" | 138" | 138" | 138" | 138" | 144" | 138" | 144" |
| | | | | For Shade Widths to 96" | 108" | 144" | 108" | 108" | 108" | 108" | 108" | 108" | 144" | 108" | 144" |
| | | | | For Shade Widths to 102" | 84" | 144" | 84" | 84" | 84" | 84" | 84" | 84" | 144" | 84" | 144" |
| | | | | For Shade Widths over 102" | NA | 144" | NA | NA | NA | NA | NA | NA | 144" | NA | 144" |
| | | | | Railroaded | | | | | | | | | | | |
| | | | | Maximum Width | 102" | 144" | 102" | 102" | 102" | 102" | 102" | 102" | 144" | 102" | 144" |
| | | | | | Maximum Height | | | | | | | | | | |
| | | | | For Shade Widths to 84" | 144" | 144" | 144" | 144" | 144" | 144" | 144" | 144" | 144" | 144" | 144" |
| | | | | For Shade Widths to 90" | 138" | 144" | 138" | 138" | 138" | 138" | 138" | 138" | 144" | 138" | 144" |
| | | | | For Shade Widths to 96" | 108" | 144" | 108" | 108" | 108" | 108" | 108" | 108" | 144" | 108" | 144" |
| | | | | For Shade Widths to 102" | 84" | 144" | 84" | 84" | 84" | 84" | 84" | 84" | 144" | 84" | 144" |
| | | | | For Shade Widths over 102" | NA | 144" | NA | NA | NA | NA | NA | NA | 144" | NA | 144" |
| 3% M Screen | 122" | YES | YES | Non-Railroaded | | | | | | | | | | | |
| | | | | Maximum Width | 108" | 122" | 108" | 108" | 108" | 108" | 108" | 108" | 122" | 108" | 122" |
| | | | | | Maximum Height | | | | | | | | | | |
| | | | | For Shade Widths to 84" | 144" | 144" | 144" | 144" | 144" | 144" | 144" | 144" | 144" | 144" | 144" |
| | | | | For Shade Widths to 90" | 138" | 144" | 138" | 138" | 138" | 138" | 138" | 138" | 144" | 138" | 144" |
| | | | | For Shade Widths to 96" | 108" | 144" | 108" | 108" | 108" | 108" | 108" | 108" | 144" | 108" | 144" |
| | | | | For Shade Widths over 96" | 66" | 144" | 66" | 66" | 66" | 66" | 66" | 66" | 144" | 66" | 144" |
| | | | | Railroaded | | | | | | | | | | | |
| | | | | Maximum Width | 108" | 144" | 108" | 108" | 108" | 108" | 108" | 108" | 144" | 108" | 144" |
| | | | | | Maximum Height | | | | | | | | | | |
| | | | | For Shade Widths to 84" | 144" | 144" | 144" | 144" | 144" | 144" | 144" | 144" | 144" | 144" | 144" |
| | | | | For Shade Widths to 90" | 138" | 144" | 138" | 138" | 138" | 138" | 138" | 138" | 144" | 138" | 144" |
| | | | | For Shade Widths to 96" | 108" | 144" | 108" | 108" | 108" | 108" | 108" | 108" | 144" | 108" | 144" |
| | | | | For Shade Widths over 96" | 66" | 144" | 66" | 66" | 66" | 66" | 66" | 66" | 144" | 66" | 144" |

# PRODUCT SIZE SPECIFICATIONS – HARDWIRED MOTORIZATION

## Minimum and Maximum Standards

Please Note: Shade sizes that are wider than the fabric roll width indicated will be made with the fabric turned width for length (railroaded). The maximum width for non-railroaded shades is the roll width unless otherwise noted.

Fabrics turned width for length will have a visible seam when fabricated longer than their maximum roll width less 10". Fabrics turned width for length may have an edge curl. This is not considered a defect in the product.

| Motor Type | Motor Name | Min Width | Min Height | Weight Capacity |
|---|---|---|---|---|
| 24v Low-Voltage | ST-30 Quiet | 18-1/2" | 12" | Lifts up to 23 lbs. |
| 110v Hardwired | ST-50 Quiet | 33" | 12" | Lifts up to 52 lbs. |
| 110v Hardwired | ST-50 Ultra Quiet | 39" | 12" | Lifts up to 52 lbs. |

Note: 110v Motorized shades are available without top treatment, with 4" R-series Fascia, or with Pocket. Maximum width for each coupled shade is 120" and maximum overall width is 216". 4" R-series Fascia & Pocket will spliced in the center when width exceed 190".

| Material Name | Roll Width | Railroad Option | Splice /Seam | | Motorized Shade without Top Treament | | Motorized Shade Deluxe Valance | Motorized Shade Fabric Valance | Motorized Shade with Medium Cassette | Motorized Shade with Large Cassette | Motorized Shade with 3" Fascia | Motorized Shade with 4" Fascia | | Motorized Shade with Pocket Headrail | |
|---|---|---|---|---|---|---|---|---|---|---|---|---|---|---|---|
| | | | | | 24v | 110v | 24v | 24v | 24v | 24v | 24v | 24v | 110v | 24v | 110v |
| 3% Sheerweave 2410 | 126" | YES | YES | Non-Railroaded | | | | | | | | | | | |
| | | | | Maximum Width | 102" | 126" | 102" | 102" | 102" | 102" | 102" | 102" | 126" | 102" | 126" |
| | | | | | Maximum Height | | | | | | | | | | |
| | | | | For Shade Widths to 72" | 144" | 144" | 144" | 144" | 144" | 144" | 144" | 144" | 144" | 144" | 144" |
| | | | | For Shade Widths to 84" | 126" | 144" | 126" | 126" | 126" | 126" | 126" | 126" | 144" | 126" | 144" |
| | | | | For Shade Widths to 90" | 96" | 144" | 96" | 96" | 96" | 96" | 96" | 96" | 144" | 96" | 144" |
| | | | | For Shade Widths to 96" | 78" | 144" | 78" | 78" | 78" | 78" | 78" | 78" | 144" | 78" | 144" |
| | | | | For Shade Widths over 96" | 60" | 144" | 60" | 60" | 60" | 60" | 60" | 60" | 144" | 60" | 144" |
| | | | | Railroaded | | | | | | | | | | | |
| | | | | Maximum Width | 102" | 144" | 102" | 102" | 102" | 102" | 102" | 102" | 144" | 102" | 144" |
| | | | | | Maximum Height | | | | | | | | | | |
| | | | | For Shade Widths to 72" | 144" | 144" | 144" | 144" | 144" | 144" | 144" | 144" | 144" | 144" | 144" |
| | | | | For Shade Widths to 84" | 126" | 144" | 126" | 126" | 126" | 126" | 126" | 126" | 144" | 126" | 144" |
| | | | | For Shade Widths to 90" | 96" | 144" | 96" | 96" | 96" | 96" | 96" | 96" | 144" | 96" | 144" |
| | | | | For Shade Widths to 96" | 78" | 144" | 78" | 78" | 78" | 78" | 78" | 78" | 144" | 78" | 144" |
| | | | | For Shade Widths over 96" | 60" | 144" | 60" | 60" | 60" | 60" | 60" | 60" | 144" | 60" | 144" |
| 3% Sheerweave 2703 | 126" | YES | YES | Non-Railroaded | | | | | | | | | | | |
| | | | | Maximum Width | 96" | 124" | 96" | 96" | 96" | 96" | 96" | 96" | 124" | 96" | 124" |
| | | | | | Maximum Height | | | | | | | | | | |
| | | | | For Shade Widths to 54" | 144" | 144" | 144" | 144" | 96" | 144" | 126" | 144" | 144" | 144" | 144" |
| | | | | For Shade Widths to 60" | 144" | 144" | 144" | 144" | 96" | 144" | 126" | 144" | 144" | 144" | 144" |
| | | | | For Shade Widths to 66" | 144" | 144" | 144" | 144" | 96" | 144" | 126" | 144" | 144" | 144" | 144" |
| | | | | For Shade Widths to 72" | 144" | 144" | 144" | 144" | 96" | 144" | 126" | 144" | 144" | 144" | 144" |
| | | | | For Shade Widths to 78" | 144" | 144" | 144" | 144" | 96" | 144" | 126" | 144" | 144" | 144" | 144" |
| | | | | For Shade Widths to 84" | 126" | 144" | 126" | 126" | 96" | 126" | 126" | 126" | 144" | 126" | 144" |
| | | | | For Shade Widths to 90" | 96" | 144" | 96" | 96" | 96" | 96" | 96" | 96" | 144" | 96" | 144" |
| | | | | For Shade Widths to 96" | 78" | 144" | 78" | 78" | 78" | 78" | 78" | 78" | 144" | 78" | 144" |
| | | | | For Shade Widths over 96" | NA | 144" | NA | NA | NA | NA | NA | NA | 144" | NA | 96" |
| | | | | Railroaded | | | | | | | | | | | |
| | | | | Maximum Width | 96" | 144" | 96" | 96" | 96" | 96" | 96" | 96" | 144" | 96" | 144" |
| | | | | | Maximum Height | | | | | | | | | | |
| | | | | For Shade Widths to 54" | 144" | 144" | 144" | 144" | 96" | 144" | 126" | 144" | 144" | 144" | 144" |
| | | | | For Shade Widths to 60" | 144" | 144" | 144" | 144" | 96" | 144" | 126" | 144" | 144" | 144" | 144" |
| | | | | For Shade Widths to 66" | 144" | 144" | 144" | 144" | 96" | 144" | 126" | 144" | 144" | 144" | 144" |
| | | | | For Shade Widths to 72" | 144" | 144" | 144" | 144" | 96" | 144" | 126" | 144" | 144" | 144" | 144" |
| | | | | For Shade Widths to 78" | 144" | 144" | 144" | 144" | 96" | 144" | 126" | 144" | 144" | 144" | 144" |
| | | | | For Shade Widths to 84" | 126" | 144" | 126" | 126" | 96" | 126" | 126" | 126" | 144" | 126" | 144" |
| | | | | For Shade Widths to 90" | 96" | 144" | 96" | 96" | 96" | 96" | 96" | 96" | 144" | 96" | 144" |
| | | | | For Shade Widths to 96" | 78" | 144" | 78" | 78" | 78" | 78" | 78" | 78" | 144" | 78" | 144" |
| | | | | For Shade Widths over 96" | NA | 144" | NA | NA | NA | NA | NA | NA | 144" | NA | 96" |
| 3% Sheerweave 4400 | 126" | YES | YES | Non-Railroaded | | | | | | | | | | | |
| | | | | Maximum Width | 102" | 126" | 102" | 102" | 102" | 102" | 102" | 102" | 126" | 102" | 126" |
| | | | | | Maximum Height | | | | | | | | | | |
| | | | | For Shade Widths to 78" | 144" | 144" | 120" | 120" | 78" | 120" | 108" | 144" | 144" | 144" | 132" |
| | | | | For Shade Widths to 84" | 126" | 144" | 120" | 120" | 78" | 120" | 108" | 126" | 144" | 126" | 132" |
| | | | | For Shade Widths to 90" | 96" | 144" | 96" | 96" | 78" | 96" | 96" | 96" | 144" | 96" | 132" |
| | | | | For Shade Widths to 96" | 78" | 144" | 78" | 78" | 78" | 78" | 78" | 78" | 144" | 78" | 132" |
| | | | | For Shade Widths over 96" | 60" | 144" | 60" | 60" | 60" | 60" | 60" | 60" | 144" | 60" | 90" |
| | | | | Railroaded | | | | | | | | | | | |
| | | | | Maximum Width | 102" | 144" | 102" | 102" | 102" | 102" | 102" | 102" | 144" | 102" | 144" |
| | | | | | Maximum Height | | | | | | | | | | |
| | | | | For Shade Widths to 78" | 144" | 144" | 120" | 120" | 78" | 120" | 108" | 144" | 144" | 144" | 144" |
| | | | | For Shade Widths to 84" | 126" | 144" | 120" | 120" | 78" | 120" | 108" | 126" | 144" | 126" | 132" |
| | | | | For Shade Widths to 90" | 96" | 144" | 96" | 96" | 78" | 96" | 96" | 96" | 144" | 96" | 132" |
| | | | | For Shade Widths to 96" | 78" | 144" | 78" | 78" | 78" | 78" | 78" | 78" | 144" | 78" | 132" |
| | | | | For Shade Widths over 96" | 60" | 144" | 60" | 60" | 60" | 60" | 60" | 60" | 144" | 60" | 78" |

# PRODUCT SIZE SPECIFICATIONS – HARDWIRED MOTORIZATION

## Minimum and Maximum Standards

Please Note: Shade sizes that are wider than the fabric roll width indicated will be made with the fabric turned width for length (railroaded). The maximum width for non-railroaded shades is the roll width unless otherwise noted.

Fabrics turned width for length will have a visible seam when fabricated longer than their maximum roll width less 10". Fabrics turned width for length may have an edge curl. This is not considered a defect in the product.

| Motor Type | Motor Name | Min Width | Min Height | Weight Capacity |
|---|---|---|---|---|
| 24v Low-Voltage | ST-30 Quiet | 18-1/2" | 12" | Lifts up to 23 lbs. |
| 110v Hardwired | ST-50 Quiet | 33" | 12" | Lifts up to 52 lbs. |
| 110v Hardwired | ST-50 Ultra Quiet | 39" | 12" | Lifts up to 52 lbs. |

Note: 110v Motorized shades are available without top treatment, with 4" R-series Fascia, or with Pocket. Maximum width for each coupled shade is 120" and maximum overall width is 216". 4" R-series Fascia & Pocket will spliced in the center when width exceed 190".

| Material Name | Roll Width | Railroad Option | Splice /Seam | | Motorized Shade without Top Treament | | Motorized Shade Deluxe Valance | Motorized Shade Fabric Valance | Motorized Shade with Medium Cassette | Motorized Shade with Large Cassette | Motorized Shade with 3" Fascia | Motorized Shade with 4" Fascia | | Motorized Shade with Pocket Headrail | |
|---|---|---|---|---|---|---|---|---|---|---|---|---|---|---|---|
| | | | | | 24v | 110v | 24v | 24v | 24v | 24v | 24v | 24v | 110v | 24v | 110v |
| 3% Sheerweave 4600 | 126" | YES | YES | Non-Railroaded | | | | | | | | | | | |
| | | | | Maximum Width | 96" | 98" | 96" | 96" | 96" | 96" | 96" | 96" | 98" | 96" | 98" |
| | | | | | Maximum Height | | | | | | | | | | |
| | | | | For Shade Widths to 54" | 120" | 120" | 120" | 120" | 84" | 120" | 114" | 120" | 120" | 120" | 120" |
| | | | | For Shade Widths to 60" | 120" | 120" | 120" | 120" | 84" | 120" | 114" | 120" | 120" | 120" | 120" |
| | | | | For Shade Widths to 66" | 120" | 120" | 120" | 120" | 84" | 120" | 114" | 120" | 120" | 120" | 120" |
| | | | | For Shade Widths to 72" | 120" | 120" | 120" | 120" | 84" | 120" | 114" | 120" | 120" | 120" | 120" |
| | | | | For Shade Widths to 78" | 120" | 120" | 120" | 120" | 84" | 120" | 114" | 120" | 120" | 120" | 120" |
| | | | | For Shade Widths to 84" | 120" | 120" | 120" | 120" | 84" | 120" | 114" | 120" | 120" | 120" | 120" |
| | | | | For Shade Widths to 90" | 96" | 120" | 96" | 96" | 84" | 96" | 96" | 96" | 120" | 96" | 120" |
| | | | | For Shade Widths to 96" | 78" | 120" | 78" | 78" | 78" | 78" | 78" | 78" | 120" | 78" | 120" |
| | | | | For Shade Widths over 96" | NA | 120" | NA | NA | NA | NA | NA | NA | 120" | NA | 120" |
| | | | | Railroaded | | | | | | | | | | | |
| | | | | Maximum Width | 96" | 120" | 96" | 96" | 96" | 96" | 96" | 96" | 120" | 96" | 120" |
| | | | | | Maximum Height | | | | | | | | | | |
| | | | | For Shade Widths to 54" | 120" | 120" | 120" | 120" | 84" | 120" | 114" | 120" | 120" | 120" | 120" |
| | | | | For Shade Widths to 60" | 120" | 120" | 120" | 120" | 84" | 120" | 114" | 120" | 120" | 120" | 120" |
| | | | | For Shade Widths to 66" | 120" | 120" | 120" | 120" | 84" | 120" | 114" | 120" | 120" | 120" | 120" |
| | | | | For Shade Widths to 72" | 120" | 120" | 120" | 120" | 84" | 120" | 114" | 120" | 120" | 120" | 120" |
| | | | | For Shade Widths to 78" | 120" | 120" | 120" | 120" | 84" | 120" | 114" | 120" | 120" | 120" | 120" |
| | | | | For Shade Widths to 84" | 120" | 120" | 120" | 120" | 84" | 120" | 114" | 120" | 120" | 120" | 120" |
| | | | | For Shade Widths to 90" | 96" | 120" | 96" | 96" | 84" | 96" | 96" | 96" | 120" | 96" | 120" |
| | | | | For Shade Widths to 96" | 78" | 120" | 78" | 78" | 78" | 78" | 78" | 78" | 120" | 78" | 120" |
| | | | | For Shade Widths over 96" | NA | 120" | NA | NA | NA | NA | NA | NA | 120" | NA | 114" |
| 3% Sheerweave 4903 | 98" | NO | NO | Non-Railroaded | | | | | | | | | | | |
| | | | | Maximum Width | 96" | 98" | 88" | 88" | 96" | 96" | 96" | 96" | 98" | 96" | 98" |
| | | | | | Maximum Height | | | | | | | | | | |
| | | | | For Shade Widths to 54" | 144" | 144" | 144" | 144" | 90" | 144" | 126" | 144" | 144" | 144" | 144" |
| | | | | For Shade Widths to 60" | 144" | 144" | 144" | 144" | 90" | 144" | 126" | 144" | 144" | 144" | 144" |
| | | | | For Shade Widths to 66" | 144" | 144" | 144" | 144" | 90" | 144" | 126" | 144" | 144" | 144" | 144" |
| | | | | For Shade Widths to 72" | 144" | 144" | 144" | 144" | 90" | 144" | 126" | 144" | 144" | 144" | 144" |
| | | | | For Shade Widths to 78" | 144" | 144" | 144" | 144" | 90" | 144" | 126" | 144" | 144" | 144" | 144" |
| | | | | For Shade Widths to 84" | 126" | 144" | 126" | 126" | 90" | 126" | 126" | 126" | 144" | 126" | 144" |
| | | | | For Shade Widths to 88" | 96" | 144" | 96" | 96" | 90" | 96" | 96" | 96" | 144" | 96" | 144" |
| | | | | For Shade Widths to 90" | 96" | 144" | N/A | N/A | 90" | 96" | 96" | 96" | 144" | 96" | 144" |
| | | | | For Shade Widths to 96" | 78" | 144" | N/A | N/A | 78" | 78" | 78" | 78" | 144" | 78" | 144" |
| | | | | For Shade Widths over 96" | N/A | 144" | N/A | N/A | N/A | N/A | N/A | N/A | 144" | N/A | 144" |
| 3% Sheerweave 5000 | 98" | NO | NO | Non-Railroaded | | | | | | | | | | | |
| *(R07_02, 04, 05, 07, 10)* | | | | Maximum Width | 96" | 96" | 86" | 86" | 96" | 96" | 96" | 96" | 98" | 96" | 98" |
| | | | | | Maximum Height | | | | | | | | | | |
| | | | | For Shade Widths to 78" | 144" | 144" | 72" | 72" | 42" | 72" | 60" | 144" | 126" | 108" | 78" |
| | | | | For Shade Widths to 84" | 126" | 144" | 72" | 72" | 42" | 72" | 60" | 126" | 126" | 108" | 78" |
| | | | | For Shade Widths to 86" | 96" | 144" | 72" | 72" | 42" | 72" | 60" | 96" | 126" | 96" | 78" |
| | | | | For Shade Widths to 90" | 96" | 144" | NA | NA | 42" | 72" | 60" | 96" | 126" | 96" | 78" |
| | | | | For Shade Widths over 90" | 78" | 144" | NA | NA | 42" | 72" | 60" | 78" | 126" | 78" | 78" |
| 3% Sheerweave 5000 | 98" | NO | NO | Non-Railroaded | | | | | | | | | | | |
| *(R07_R11, R89, R90, R93, U10, U11)* | | | | Maximum Width | 96" | 98" | 88" | 88" | 96" | 96" | 96" | 96" | 98" | 96" | 98" |
| | | | | | Maximum Height | | | | | | | | | | |
| | | | | For Shade Widths to 54" | 144" | 144" | 78" | 78" | 48" | 78" | 72" | 144" | 138" | 114" | 84" |
| | | | | For Shade Widths to 60" | 144" | 144" | 78" | 78" | 48" | 78" | 72" | 144" | 138" | 114" | 84" |
| | | | | For Shade Widths to 66" | 144" | 144" | 78" | 78" | 48" | 78" | 72" | 144" | 138" | 114" | 84" |
| | | | | For Shade Widths to 72" | 144" | 144" | 78" | 78" | 48" | 78" | 72" | 144" | 138" | 114" | 84" |
| | | | | For Shade Widths to 78" | 144" | 144" | 78" | 78" | 48" | 78" | 72" | 144" | 138" | 114" | 84" |
| | | | | For Shade Widths to 84" | 126" | 144" | 78" | 78" | 48" | 78" | 72" | 126" | 138" | 114" | 84" |
| | | | | For Shade Widths to 88" | 96" | 144" | 78" | 78" | 48" | 78" | 72" | 96" | 138" | 96" | 84" |
| | | | | For Shade Widths to 90" | 96" | 144" | NA | NA | 48" | 78" | 72" | 96" | 138" | 96" | 84" |
| | | | | For Shade Widths over 90" | 78" | 144" | NA | NA | 48" | 78" | 72" | 78" | 138" | 78" | 84" |

# PRODUCT SIZE SPECIFICATIONS – HARDWIRED MOTORIZATION

## Minimum and Maximum Standards

Please Note: Shade sizes that are wider than the fabric roll width indicated will be made with the fabric turned width for length (railroaded). The maximum width for non-railroaded shades is the roll width unless otherwise noted.

Fabrics turned width for length will have a visible seam when fabricated longer than their maximum roll width less 10". Fabrics turned width for length may have an edge curl. This is not considered a defect in the product.

| Motor Type | Motor Name | Min Width | Min Height | Weight Capacity |
|---|---|---|---|---|
| 24v Low-Voltage | ST-30 Quiet | 18-1/2" | 12" | Lifts up to 23 lbs. |
| 110v Hardwired | ST-50 Quiet | 33" | 12" | Lifts up to 52 lbs. |
| 110v Hardwired | ST-50 Ultra Quiet | 39" | 12" | Lifts up to 52 lbs. |

Note: 110v Motorized shades are available without top treatment, with 4" R-series Fascia, or with Pocket. Maximum width for each coupled shade is 120" and maximum overall width is 216". 4" R-series Fascia & Pocket will spliced in the center when width exceed 190".

| Material Name | Roll Width | Railroad Option | Splice /Seam | | Motorized Shade without Top Treament | | Motorized Shade Deluxe Valance | Motorized Shade Fabric Valance | Motorized Shade with Medium Cassette | Motorized Shade with Large Cassette | Motorized Shade with 3" Fascia | Motorized Shade with 4" Fascia | | Motorized Shade with Pocket Headrail | |
|---|---|---|---|---|---|---|---|---|---|---|---|---|---|---|---|
| | | | | | 24v | 110v | 24v | 24v | 24v | 24v | 24v | 24v | 110v | 24v | 110v |
| 3% T Screen | 98" | YES | NO | Non-Railroaded | | | | | | | | | | | |
| | | | | Maximum Width | 98" | 98" | 88" | 88" | 98" | 98" | 98" | 98" | 98" | 98" | 98" |
| | | | | | Maximum Height | | | | | | | | | | |
| | | | | For Shade Widths to 84" | 144" | 144" | 144" | 144" | 108" | 144" | 144" | 144" | 144" | 144" | 144" |
| | | | | For Shade Widths to 88" | 138" | 144" | 138" | 138" | 108" | 138" | 138" | 138" | 144" | 138" | 144" |
| | | | | For Shade Widths to 90" | 138" | 144" | NA | NA | 108" | 138" | 138" | 138" | 144" | 138" | 144" |
| | | | | For Shade Widths to 96" | 108" | 144" | NA | NA | 108" | 108" | 108" | 108" | 144" | 108" | 144" |
| | | | | For Shade Widths over 96" | 84" | 144" | NA | NA | 84" | 84" | 84" | 84" | 144" | 84" | 144" |
| | | | | Railroaded | | | | | | | | | | | |
| | | | | Maximum Width | 108" | 144" | 108" | 108" | 108" | 108" | 108" | 108" | 144" | 108" | 144" |
| | | | | | Maximum Height | | | | | | | | | | |
| | | | | For Shade Widths to 96" | 86" | 82" | 86" | 86" | 86" | 86" | 86" | 86" | 82" | 86" | 82" |
| | | | | For Shade Widths over 96" | 66" | 82" | 66" | 66" | 66" | 66" | 66" | 66" | 82" | 66" | 82" |
| 4% S Screen | 122" | NO | NO | Non-Railroaded | | | | | | | | | | | |
| | | | | Maximum Width | 102" | 122" | 102" | 102" | 102" | 102" | 102" | 102" | 122" | 102" | 122" |
| | | | | | Maximum Height | | | | | | | | | | |
| | | | | For Shade Widths to 72" | 144" | 144" | 120" | 120" | 72" | 120" | 102" | 144" | 144" | 144" | 126" |
| | | | | For Shade Widths to 84" | 126" | 144" | 120" | 120" | 72" | 120" | 102" | 126" | 144" | 126" | 126" |
| | | | | For Shade Widths to 90" | 96" | 144" | 96" | 96" | 72" | 96" | 96" | 96" | 144" | 96" | 126" |
| | | | | For Shade Widths to 96" | 78" | 144" | 78" | 78" | 72" | 78" | 78" | 78" | 144" | 78" | 126" |
| | | | | For Shade Widths over 96" | 60" | 144" | 60" | 60" | 60" | 60" | 60" | 60" | 144" | 60" | 90" |
| 4% Silver Screen | 94" | YES | YES | Non-Railroaded | | | | | | | | | | | |
| | | | | Maximum Width | 94" | 94" | 84" | 84" | 94" | 94" | 94" | 94" | 94" | 94" | 94" |
| | | | | | Maximum Height | | | | | | | | | | |
| | | | | For Shade Widths to 84" | 144" | 144" | 144" | 144" | 144" | 144" | 144" | 144" | 144" | 144" | 144" |
| | | | | For Shade Widths to 90" | 138" | 144" | NA | NA | 138" | 138" | 138" | 138" | 144" | 138" | 144" |
| | | | | For Shade Widths to 94" | 108" | 144" | NA | NA | 108" | 108" | 108" | 108" | 144" | 108" | 144" |
| | | | | Railroaded | | | | | | | | | | | |
| | | | | Maximum Width | 102" | 144" | 102" | 102" | 102" | 102" | 102" | 102" | 144" | 102" | 144" |
| | | | | | Maximum Height | | | | | | | | | | |
| | | | | For Shade Widths to 84" | 144" | 144" | 144" | 144" | 144" | 144" | 144" | 144" | 144" | 144" | 144" |
| | | | | For Shade Widths to 90" | 138" | 144" | 138" | 138" | 138" | 138" | 138" | 138" | 144" | 138" | 144" |
| | | | | For Shade Widths to 96" | 108" | 144" | 108" | 108" | 108" | 108" | 108" | 108" | 144" | 108" | 144" |
| | | | | For Shade Widths to 102" | 84" | 144" | 84" | 84" | 84" | 84" | 84" | 84" | 144" | 84" | 144" |
| | | | | For Shade Widths over 102" | NA | 144" | NA | NA | NA | NA | NA | NA | 144" | NA | 144" |
| 5% E Screen | 122" | YES | YES | Non-Railroaded | | | | | | | | | | | |
| | | | | Maximum Width | 102" | 122" | 102" | 102" | 102" | 102" | 102" | 102" | 122" | 102" | 122" |
| | | | | | Maximum Height | | | | | | | | | | |
| | | | | For Shade Widths to 84" | 144" | 144" | 144" | 144" | 144" | 144" | 144" | 144" | 144" | 144" | 144" |
| | | | | For Shade Widths to 90" | 138" | 144" | 138" | 138" | 138" | 138" | 138" | 138" | 144" | 138" | 144" |
| | | | | For Shade Widths to 96" | 108" | 144" | 108" | 108" | 108" | 108" | 108" | 108" | 144" | 108" | 144" |
| | | | | For Shade Widths to 102" | 84" | 144" | 84" | 84" | 84" | 84" | 84" | 84" | 144" | 84" | 144" |
| | | | | For Shade Widths over 102" | NA | 144" | NA | NA | NA | NA | NA | NA | 144" | NA | 144" |
| | | | | Railroaded | | | | | | | | | | | |
| | | | | Maximum Width | 102" | 144" | 102" | 102" | 102" | 102" | 102" | 102" | 144" | 102" | 144" |
| | | | | | Maximum Height | | | | | | | | | | |
| | | | | For Shade Widths to 84" | 144" | 144" | 144" | 144" | 144" | 144" | 144" | 144" | 144" | 144" | 144" |
| | | | | For Shade Widths to 90" | 138" | 144" | 138" | 138" | 138" | 138" | 138" | 138" | 144" | 138" | 144" |
| | | | | For Shade Widths to 96" | 108" | 144" | 108" | 108" | 108" | 108" | 108" | 108" | 144" | 108" | 144" |
| | | | | For Shade Widths to 102" | 84" | 144" | 84" | 84" | 84" | 84" | 84" | 84" | 144" | 84" | 144" |
| | | | | For Shade Widths over 102" | NA | 144" | NA | NA | NA | NA | NA | NA | 144" | NA | 144" |

# PRODUCT SIZE SPECIFICATIONS – HARDWIRED MOTORIZATION

## Minimum and Maximum Standards

Please Note: Shade sizes that are wider than the fabric roll width indicated will be made with the fabric turned width for length (railroaded). The maximum width for non-railroaded shades is the roll width unless otherwise noted.

Fabrics turned width for length will have a visible seam when fabricated longer than their maximum roll width less 10". Fabrics turned width for length may have an edge curl. This is not considered a defect in the product.

| Motor Type | Motor Name | Min Width | Min Height | Weight Capacity |
|---|---|---|---|---|
| 24v Low-Voltage | ST-30 Quiet | 18-1/2" | 12" | Lifts up to 23 lbs. |
| 110v Hardwired | ST-50 Quiet | 33" | 12" | Lifts up to 52 lbs. |
| 110v Hardwired | ST-50 Ultra Quiet | 39" | 12" | Lifts up to 52 lbs. |

Note: 110v Motorized shades are available without top treatment, with 4" R-series Fascia, or with Pocket. Maximum width for each coupled shade is 120" and maximum overall width is 216". 4" R-series Fascia & Pocket will spliced in the center when width exceed 190".

| Material Name | Roll Width | Railroad Option | Splice /Seam | | Motorized Shade without Top Treament | | Motorized Shade Deluxe Valance | Motorized Shade Fabric Valance | Motorized Shade with Medium Cassette | Motorized Shade with Large Cassette | Motorized Shade with 3" Fascia | Motorized Shade with 4" Fascia | | Motorized Shade with Pocket Headrail | |
|---|---|---|---|---|---|---|---|---|---|---|---|---|---|---|---|
| | | | | | 24v | 110v | 24v | 24v | 24v | 24v | 24v | 24v | 110v | 24v | 110v |
| 5% M Screen Deco | 98" | YES | YES | Non-Railroaded | | | | | | | | | | | |
| | | | | Maximum Width | 96" | 96" | 86" | 86" | 96" | 96" | 96" | 96" | 96" | 96" | 96" |
| | | | | | Maximum Height | | | | | | | | | | |
| | | | | For Shade Widths to 84" | 144" | 144" | 144" | 144" | 126" | 144" | 144" | 144" | 144" | 144" | 144" |
| | | | | For Shade Widths to 86" | 138" | 144" | 138" | 138" | 126" | 138" | 138" | 138" | 144" | 138" | 144" |
| | | | | For Shade Widths to 90" | 138" | 144" | NA | NA | 126" | 138" | 138" | 138" | 144" | 138" | 144" |
| | | | | For Shade Widths to 96" | 108" | 144" | NA | NA | 108" | 108" | 108" | 108" | 144" | 108" | 144" |
| | | | | Railroaded | | | | | | | | | | | |
| | | | | Maximum Width | 102" | 144" | 102" | 102" | 102" | 102" | 102" | 102" | 144" | 102" | 144" |
| | | | | | Maximum Height | | | | | | | | | | |
| | | | | For Shade Widths to 84" | 144" | 144" | 144" | 144" | 126" | 144" | 144" | 144" | 144" | 144" | 144" |
| | | | | For Shade Widths to 90" | 138" | 144" | 138" | 138" | 126" | 138" | 138" | 138" | 144" | 138" | 144" |
| | | | | For Shade Widths to 96" | 108" | 144" | 108" | 108" | 108" | 108" | 108" | 108" | 144" | 108" | 144" |
| | | | | For Shade Widths to 102" | 84" | 144" | 84" | 84" | 84" | 84" | 84" | 84" | 144" | 84" | 144" |
| | | | | For Shade Widths over 102" | NA | 144" | NA | NA | NA | NA | NA | NA | 144" | NA | 126" |
| 5% Sheerweave 2000 | 126" | YES | YES | Non-Railroaded | | | | | | | | | | | |
| | | | | Maximum Width | 96" | 126" | 96" | 96" | 96" | 96" | 96" | 96" | 126" | 96" | 126" |
| | | | | | Maximum Height | | | | | | | | | | |
| | | | | For Shade Widths to 54" | 144" | 144" | 144" | 144" | 132" | 144" | 144" | 144" | 144" | 144" | 144" |
| | | | | For Shade Widths to 60" | 144" | 144" | 144" | 144" | 126" | 144" | 144" | 144" | 144" | 144" | 144" |
| | | | | For Shade Widths to 66" | 144" | 144" | 144" | 144" | 126" | 144" | 144" | 144" | 144" | 144" | 144" |
| | | | | For Shade Widths to 72" | 144" | 144" | 144" | 144" | 126" | 144" | 144" | 144" | 144" | 144" | 144" |
| | | | | For Shade Widths to 78" | 144" | 144" | 144" | 144" | 126" | 144" | 144" | 144" | 144" | 144" | 144" |
| | | | | For Shade Widths to 84" | 126" | 144" | 126" | 126" | 126" | 126" | 126" | 126" | 144" | 126" | 144" |
| | | | | For Shade Widths to 90" | 96" | 144" | 96" | 96" | 96" | 96" | 96" | 96" | 144" | 96" | 144" |
| | | | | For Shade Widths to 96" | 78" | 144" | 78" | 78" | 78" | 78" | 78" | 78" | 144" | 78" | 144" |
| | | | | For Shade Widths over 96" | N/A | 144" | N/A | N/A | N/A | N/A | N/A | N/A | 144" | N/A | 138" |
| | | | | Railroaded | | | | | | | | | | | |
| | | | | Maximum Width | 96" | 120" | 96" | 96" | 96" | 96" | 96" | 96" | 120" | 96" | 120" |
| | | | | | Maximum Height | | | | | | | | | | |
| | | | | For Shade Widths to 54" | 120" | 120" | 120" | 120" | 120" | 120" | 120" | 120" | 120" | 120" | 120" |
| | | | | For Shade Widths to 60" | 120" | 120" | 120" | 120" | 120" | 120" | 120" | 120" | 120" | 120" | 120" |
| | | | | For Shade Widths to 66" | 120" | 120" | 120" | 120" | 120" | 120" | 120" | 120" | 120" | 120" | 120" |
| | | | | For Shade Widths to 72" | 120" | 120" | 120" | 120" | 120" | 120" | 120" | 120" | 120" | 120" | 120" |
| | | | | For Shade Widths to 78" | 120" | 120" | 120" | 120" | 120" | 120" | 120" | 120" | 120" | 120" | 120" |
| | | | | For Shade Widths to 84" | 120" | 120" | 120" | 120" | 120" | 120" | 120" | 120" | 120" | 120" | 120" |
| | | | | For Shade Widths to 90" | 96" | 120" | 96" | 96" | 96" | 96" | 96" | 96" | 120" | 96" | 120" |
| | | | | For Shade Widths to 96" | 78" | 120" | 78" | 78" | 78" | 78" | 78" | 78" | 120" | 78" | 120" |
| | | | | For Shade Widths over 96" | N/A | 120" | N/A | N/A | N/A | N/A | N/A | N/A | 120" | N/A | 120" |
| 5% Sheerweave 2390 | 126" | YES | YES | Non-Railroaded | | | | | | | | | | | |
| | | | | Maximum Width | 102" | 126" | 102" | 102" | 102" | 102" | 102" | 102" | 126" | 102" | 126" |
| | | | | | Maximum Height | | | | | | | | | | |
| | | | | For Shade Widths to 84" | 144" | 144" | 144" | 144" | 144" | 144" | 144" | 144" | 144" | 144" | 144" |
| | | | | For Shade Widths to 90" | 138" | 144" | 138" | 138" | 138" | 138" | 138" | 138" | 144" | 138" | 144" |
| | | | | For Shade Widths to 96" | 108" | 144" | 108" | 108" | 108" | 108" | 108" | 108" | 144" | 108" | 144" |
| | | | | For Shade Widths to 102" | 84" | 144" | 84" | 84" | 84" | 84" | 84" | 84" | 144" | 84" | 144" |
| | | | | For Shade Widths over 102" | NA | 144" | NA | NA | NA | NA | NA | NA | 144" | NA | 144" |
| | | | | Railroaded | | | | | | | | | | | |
| | | | | Maximum Width | 102" | 144" | 102" | 102" | 102" | 102" | 102" | 102" | 144" | 102" | 144" |
| | | | | | Maximum Height | | | | | | | | | | |
| | | | | For Shade Widths to 84" | 144" | 144" | 144" | 144" | 144" | 144" | 144" | 144" | 144" | 144" | 144" |
| | | | | For Shade Widths to 90" | 138" | 144" | 138" | 138" | 138" | 138" | 138" | 138" | 144" | 138" | 144" |
| | | | | For Shade Widths to 96" | 108" | 144" | 108" | 108" | 108" | 108" | 108" | 108" | 144" | 108" | 144" |
| | | | | For Shade Widths to 102" | 84" | 144" | 84" | 84" | 84" | 84" | 84" | 84" | 144" | 84" | 144" |
| | | | | For Shade Widths over 102" | NA | 144" | NA | NA | NA | NA | NA | NA | 144" | NA | 144" |

# PRODUCT SIZE SPECIFICATIONS – HARDWIRED MOTORIZATION

## Minimum and Maximum Standards

Please Note: Shade sizes that are wider than the fabric roll width indicated will be made with the fabric turned width for length (railroaded). The maximum width for non-railroaded shades is the roll width unless otherwise noted.

Fabrics turned width for length will have a visible seam when fabricated longer than their maximum roll width less 10". Fabrics turned width for length may have an edge curl. This is not considered a defect in the product.

| Motor Type | Motor Name | Min Width | Min Height | Weight Capacity |
|---|---|---|---|---|
| 24v Low-Voltage | ST-30 Quiet | 18-1/2" | 12" | Lifts up to 23 lbs. |
| 110v Hardwired | ST-50 Quiet | 33" | 12" | Lifts up to 52 lbs. |
| 110v Hardwired | ST-50 Ultra Quiet | 39" | 12" | Lifts up to 52 lbs. |

Note: 110v Motorized shades are available without top treatment, with 4" R-series Fascia, or with Pocket. Maximum width for each coupled shade is 120" and maximum overall width is 216". 4" R-series Fascia & Pocket will spliced in the center when width exceed 190".

| Material Name | Roll Width | Railroad Option | Splice /Seam | | Motorized Shade without Top Treament | | Motorized Shade Deluxe Valance | Motorized Shade Fabric Valance | Motorized Shade with Medium Cassette | Motorized Shade with Large Cassette | Motorized Shade with 3" Fascia | Motorized Shade with 4" Fascia | | Motorized Shade with Pocket Headrail | |
|---|---|---|---|---|---|---|---|---|---|---|---|---|---|---|---|
| | | | | | 24v | 110v | 24v | 24v | 24v | 24v | 24v | 24v | 110v | 24v | 110v |
| 5% Sheerweave 2705 | 126" | NO | NO | Non-Railroaded | | | | | | | | | | | |
| | | | | Maximum Width | 98" | 98" | 98" | N/A | 98" | 98" | 98" | 98" | 98" | 98" | 98" |
| | | | | | Maximum Height | | | | | | | | | | |
| | | | | For Shade Widths to 66" | 120" | 120" | 120" | N/A | 102" | 120" | 120" | 120" | 120" | 120" | 120" |
| | | | | For Shade Widths to 72" | 120" | 120" | 120" | N/A | 102" | 120" | 120" | 120" | 120" | 120" | 120" |
| | | | | For Shade Widths to 78" | 120" | 120" | 120" | N/A | 102" | 120" | 120" | 120" | 120" | 120" | 120" |
| | | | | For Shade Widths to 84" | 120" | 120" | 120" | N/A | 102" | 120" | 120" | 120" | 120" | 120" | 120" |
| | | | | For Shade Widths to 90" | 120" | 120" | 120" | N/A | 102" | 120" | 120" | 120" | 120" | 120" | 120" |
| | | | | For Shade Widths to 96" | 108" | 120" | 108" | N/A | 102" | 108" | 108" | 108" | 120" | 108" | 120" |
| | | | | For Shade Widths over 96" | 84" | 120" | 84" | N/A | 84" | 84" | 84" | 84" | 120" | 84" | 120" |
| 5% Sheerweave 4000 | 126" | YES | YES | Non-Railroaded | | | | | | | | | | | |
| | | | | Maximum Width | 102" | 126" | 102" | 102" | 102" | 102" | 102" | 102" | 126" | 102" | 126" |
| | | | | | Maximum Height | | | | | | | | | | |
| | | | | For Shade Widths to 78" | 144" | 144" | 138" | 138" | 90" | 138" | 120" | 144" | 144" | 144" | 144" |
| | | | | For Shade Widths to 84" | 126" | 144" | 126" | 126" | 90" | 126" | 120" | 126" | 144" | 126" | 144" |
| | | | | For Shade Widths to 90" | 96" | 144" | 96" | 96" | 90" | 96" | 96" | 96" | 144" | 96" | 144" |
| | | | | For Shade Widths to 96" | 78" | 144" | 78" | 78" | 78" | 78" | 78" | 78" | 144" | 78" | 144" |
| | | | | For Shade Widths over 96" | 60" | 144" | 60" | 60" | 60" | 60" | 60" | 60" | 144" | 60" | 90" |
| | | | | Railroaded | | | | | | | | | | | |
| | | | | Maximum Width | 102" | 144" | 102" | 102" | 102" | 102" | 102" | 102" | 144" | 102" | 144" |
| | | | | | Maximum Height | | | | | | | | | | |
| | | | | For Shade Widths to 78" | 144" | 144" | 138" | 138" | 90" | 138" | 120" | 144" | 144" | 144" | 144" |
| | | | | For Shade Widths to 84" | 126" | 144" | 126" | 126" | 90" | 126" | 120" | 126" | 144" | 126" | 144" |
| | | | | For Shade Widths to 90" | 96" | 144" | 96" | 96" | 90" | 96" | 96" | 96" | 144" | 96" | 144" |
| | | | | For Shade Widths to 96" | 78" | 144" | 78" | 78" | 78" | 78" | 78" | 78" | 144" | 78" | 144" |
| | | | | For Shade Widths over 96" | 60" | 144" | 60" | 60" | 60" | 60" | 60" | 60" | 144" | 60" | 90" |
| 5% Sheerweave 4500 | 126" | YES | YES | Non-Railroaded | | | | | | | | | | | |
| | | | | Maximum Width | 96" | 126" | 96" | 96" | 96" | 96" | 96" | 96" | 126" | 96" | 126" |
| | | | | | Maximum Height | | | | | | | | | | |
| | | | | For Shade Widths to 54" | 144" | 144" | 144" | 144" | 108" | 144" | 144" | 144" | 144" | 144" | 144" |
| | | | | For Shade Widths to 60" | 144" | 144" | 144" | 144" | 108" | 144" | 144" | 144" | 144" | 144" | 144" |
| | | | | For Shade Widths to 66" | 144" | 144" | 144" | 144" | 108" | 144" | 144" | 144" | 144" | 144" | 144" |
| | | | | For Shade Widths to 72" | 144" | 144" | 144" | 144" | 108" | 144" | 144" | 144" | 144" | 144" | 144" |
| | | | | For Shade Widths to 78" | 144" | 144" | 144" | 144" | 108" | 144" | 144" | 144" | 144" | 144" | 144" |
| | | | | For Shade Widths to 84" | 126" | 144" | 126" | 126" | 108" | 126" | 126" | 126" | 144" | 126" | 144" |
| | | | | For Shade Widths to 90" | 96" | 144" | 96" | 96" | 96" | 96" | 96" | 96" | 144" | 96" | 144" |
| | | | | For Shade Widths to 96" | 78" | 144" | 78" | 78" | 72" | 78" | 78" | 78" | 144" | 78" | 144" |
| | | | | For Shade Widths over 96" | NA | 144" | NA | NA | NA | NA | NA | NA | 144" | NA | 108" |
| | | | | Railroaded | | | | | | | | | | | |
| | | | | Maximum Width | 96" | 120" | 96" | 96" | 96" | 96" | 96" | 96" | 120" | 96" | 120" |
| | | | | | Maximum Height | | | | | | | | | | |
| | | | | For Shade Widths to 54" | 144" | 144" | 144" | 144" | 108" | 144" | 144" | 144" | 144" | 144" | 144" |
| | | | | For Shade Widths to 60" | 144" | 144" | 144" | 144" | 108" | 144" | 144" | 144" | 144" | 144" | 144" |
| | | | | For Shade Widths to 66" | 144" | 144" | 144" | 144" | 108" | 144" | 144" | 144" | 144" | 144" | 144" |
| | | | | For Shade Widths to 72" | 144" | 144" | 144" | 144" | 108" | 144" | 144" | 144" | 144" | 144" | 144" |
| | | | | For Shade Widths to 78" | 144" | 144" | 144" | 144" | 108" | 144" | 144" | 144" | 144" | 144" | 144" |
| | | | | For Shade Widths to 84" | 126" | 144" | 126" | 126" | 108" | 126" | 126" | 126" | 144" | 126" | 144" |
| | | | | For Shade Widths to 90" | 96" | 144" | 96" | 96" | 96" | 96" | 96" | 96" | 144" | 96" | 144" |
| | | | | For Shade Widths to 96" | 78" | 144" | 78" | 78" | 72" | 78" | 78" | 78" | 144" | 78" | 144" |
| | | | | For Shade Widths over 96" | NA | 144" | NA | NA | NA | NA | NA | NA | 144" | NA | 108" |

# PRODUCT SIZE SPECIFICATIONS – HARDWIRED MOTORIZATION

## Minimum and Maximum Standards

Please Note: Shade sizes that are wider than the fabric roll width indicated will be made with the fabric turned width for length (railroaded). The maximum width for non-railroaded shades is the roll width unless otherwise noted.

Fabrics turned width for length will have a visible seam when fabricated longer than their maximum roll width less 10". Fabrics turned width for length may have an edge curl. This is not considered a defect in the product.

| Motor Type | Motor Name | Min Width | Min Height | Weight Capacity |
|---|---|---|---|---|
| 24v Low-Voltage | ST-30 Quiet | 18-1/2" | 12" | Lifts up to 23 lbs. |
| 110v Hardwired | ST-50 Quiet | 33" | 12" | Lifts up to 52 lbs. |
| 110v Hardwired | ST-50 Ultra Quiet | 39" | 12" | Lifts up to 52 lbs. |

Note: 110v Motorized shades are available without top treatment, with 4" R-series Fascia, or with Pocket. Maximum width for each coupled shade is 120" and maximum overall width is 216". 4" R-series Fascia & Pocket will spliced in the center when width exceed 190".

| Material Name | Roll Width | Railroad Option | Splice /Seam | | Motorized Shade without Top Treament | | Motorized Shade Deluxe Valance | Motorized Shade Fabric Valance | Motorized Shade with Medium Cassette | Motorized Shade with Large Cassette | Motorized Shade with 3" Fascia | Motorized Shade with 4" Fascia | | Motorized Shade with Pocket Headrail | |
|---|---|---|---|---|---|---|---|---|---|---|---|---|---|---|---|
| | | | | | 24v | 110v | 24v | 24v | 24v | 24v | 24v | 24v | 110v | 24v | 110v |
| **5% Sheerweave 5000** *(R10_01, 03, 06, 07, 09, 10, 11, 12, 13,14, 15, 16, 17, 18, 19, 20, 21)* | 98" | NO | NO | **Non-Railroaded** | | | | | | | | | | | |
| | | | | **Maximum Width** | 98" | 98" | 88" | 88" | 98" | 98" | 98" | 98" | 98" | 98" | 98" |
| | | | | | Maximum Height | | | | | | | | | | |
| | | | | **For Shade Widths to 72"** | 144" | 144" | 90" | 90" | 54" | 90" | 78" | 144" | 144" | 126" | 96" |
| | | | | **For Shade Widths to 84"** | 126" | 144" | 90" | 90" | 54" | 90" | 78" | 126" | 144" | 126" | 96" |
| | | | | **For Shade Widths to 88"** | 96" | 144" | 90" | 90" | 54" | 90" | 78" | 96" | 144" | 96" | 96" |
| | | | | **For Shade Widths to 90"** | 96" | 144" | NA | NA | 54" | 90" | 78" | 96" | 144" | 96" | 96" |
| | | | | **For Shade Widths over 90"** | 60" | 144" | NA | NA | 54" | 60" | 60" | 60" | 144" | 60" | 96" |
| **5% Sheerweave 5000** *(R10_Q51, S77, S84)* | 98" | NO | NO | **Non-Railroaded** | | | | | | | | | | | |
| | | | | **Maximum Width** | 96" | 98" | 88" | 88" | 96" | 96" | 96" | 96" | 98" | 96" | 98" |
| | | | | | Maximum Height | | | | | | | | | | |
| | | | | **For Shade Widths to 54"** | 144" | 144" | 90" | 90" | 54" | 90" | 78" | 144" | 144" | 126" | 96" |
| | | | | **For Shade Widths to 60"** | 144" | 144" | 90" | 90" | 54" | 90" | 78" | 144" | 144" | 126" | 96" |
| | | | | **For Shade Widths to 66"** | 144" | 144" | 90" | 90" | 54" | 90" | 78" | 144" | 144" | 126" | 96" |
| | | | | **For Shade Widths to 72"** | 144" | 144" | 90" | 90" | 54" | 90" | 78" | 144" | 144" | 126" | 96" |
| | | | | **For Shade Widths to 78"** | 144" | 144" | 90" | 90" | 54" | 90" | 78" | 144" | 144" | 126" | 96" |
| | | | | **For Shade Widths to 84"** | 126" | 144" | 90" | 90" | 54" | 90" | 78" | 126" | 144" | 126" | 96" |
| | | | | **For Shade Widths to 88"** | 96" | 144" | 90" | 90" | 54" | 90" | 78" | 96" | 144" | 96" | 96" |
| | | | | **For Shade Widths to 90"** | 96" | 144" | NA | NA | 54" | 90" | 78" | 96" | 144" | 96" | 96" |
| | | | | **For Shade Widths over 90"** | 78" | 144" | NA | NA | 54" | 78" | 78" | 78" | 144" | 78" | 96" |
| **5% Sheerweave 5000** *(R10_Q43, S82)* | 98" | NO | NO | **Non-Railroaded** | | | | | | | | | | | |
| | | | | **Maximum Width** | 96" | 98" | 88" | 88" | 96" | 96" | 96" | 96" | 98" | 96" | 98" |
| | | | | | Maximum Height | | | | | | | | | | |
| | | | | **For Shade Widths to 54"** | 144" | 144" | 102" | 102" | 66" | 102" | 90" | 144" | 144" | 144" | 114" |
| | | | | **For Shade Widths to 60"** | 144" | 144" | 102" | 102" | 66" | 102" | 90" | 144" | 144" | 144" | 114" |
| | | | | **For Shade Widths to 66"** | 144" | 144" | 102" | 102" | 66" | 102" | 90" | 144" | 144" | 144" | 114" |
| | | | | **For Shade Widths to 72"** | 144" | 144" | 102" | 102" | 66" | 102" | 90" | 144" | 144" | 144" | 114" |
| | | | | **For Shade Widths to 78"** | 144" | 144" | 102" | 102" | 66" | 102" | 90" | 144" | 144" | 144" | 114" |
| | | | | **For Shade Widths to 84"** | 126" | 144" | 102" | 102" | 66" | 102" | 90" | 126" | 144" | 126" | 114" |
| | | | | **For Shade Widths to 88"** | 96" | 144" | 96" | 96" | 66" | 96" | 90" | 96" | 144" | 96" | 114" |
| | | | | **For Shade Widths to 90"** | 96" | 144" | NA | NA | 66" | 96" | 90" | 96" | 144" | 96" | 114" |
| | | | | **For Shade Widths over 90"** | 78" | 144" | NA | NA | 66" | 78" | 78" | 78" | 144" | 78" | 114" |
| **7% Global Screen** | 118" | YES | YES | **Non-Railroaded** | | | | | | | | | | | |
| | | | | **Maximum Width** | 108" | 118" | 108" | 108" | 108" | 108" | 108" | 108" | 118" | 108" | 118" |
| | | | | | Maximum Height | | | | | | | | | | |
| | | | | **For Shade Widths to 84"** | 144" | 144" | 144" | 144" | 126" | 144" | 144" | 144" | 144" | 144" | 144" |
| | | | | **For Shade Widths to 90"** | 138" | 144" | 138" | 138" | 126" | 138" | 138" | 138" | 144" | 138" | 144" |
| | | | | **For Shade Widths to 96"** | 108" | 144" | 108" | 108" | 108" | 108" | 108" | 108" | 144" | 108" | 144" |
| | | | | **For Shade Widths to 102"** | 84" | 144" | 84" | 84" | 84" | 84" | 84" | 84" | 144" | 84" | 144" |
| | | | | **For Shade Widths to 108"** | 66" | 144" | 66" | 66" | 66" | 66" | 66" | 66" | 144" | 66" | 144" |
| | | | | **For Shade Widths over 108"** | NA | 120" | NA | NA | NA | NA | NA | NA | 144" | NA | 144" |
| | | | | **Railroaded** | | | | | | | | | | | |
| | | | | **Maximum Width** | 108" | 120" | 108" | 108" | 108" | 108" | 108" | 108" | 120" | 108" | 120" |
| | | | | | Maximum Height | | | | | | | | | | |
| | | | | **For Shade Widths to 84"** | 144" | 144" | 144" | 144" | 126" | 144" | 144" | 144" | 144" | 144" | 144" |
| | | | | **For Shade Widths to 90"** | 138" | 144" | 138" | 138" | 126" | 138" | 138" | 138" | 144" | 138" | 144" |
| | | | | **For Shade Widths to 96"** | 108" | 144" | 108" | 108" | 108" | 108" | 108" | 108" | 144" | 108" | 144" |
| | | | | **For Shade Widths to 102"** | 84" | 144" | 84" | 84" | 84" | 84" | 84" | 84" | 144" | 84" | 144" |
| | | | | **For Shade Widths to 108"** | 66" | 144" | 66" | 66" | 66" | 66" | 66" | 66" | 144" | 66" | 144" |
| | | | | **For Shade Widths over 108"** | NA | 120" | NA | NA | NA | NA | NA | NA | 144" | NA | 144" |

# PRODUCT SIZE SPECIFICATIONS – HARDWIRED MOTORIZATION

## Minimum and Maximum Standards

Please Note: Shade sizes that are wider than the fabric roll width indicated will be made with the fabric turned width for length (railroaded). The maximum width for non-railroaded shades is the roll width unless otherwise noted.

Fabrics turned width for length will have a visible seam when fabricated longer than their maximum roll width less 10". Fabrics turned width for length may have an edge curl. This is not considered a defect in the product.

| Motor Type | Motor Name | Min Width | Min Height | Weight Capacity |
|---|---|---|---|---|
| 24v Low-Voltage | ST-30 Quiet | 18-1/2" | 12" | Lifts up to 23 lbs. |
| 110v Hardwired | ST-50 Quiet | 33" | 12" | Lifts up to 52 lbs. |
| 110v Hardwired | ST-50 Ultra Quiet | 39" | 12" | Lifts up to 52 lbs. |

Note: 110v Motorized shades are available without top treatment, with 4" R-series Fascia, or with Pocket. Maximum width for each coupled shade is 120" and maximum overall width is 216". 4" R-series Fascia & Pocket will spliced in the center when width exceed 190".

| Material Name | Roll Width | Railroad Option | Splice /Seam | | Motorized Shade without Top Treament | | Motorized Shade Deluxe Valance | Motorized Shade Fabric Valance | Motorized Shade with Medium Cassette | Motorized Shade with Large Cassette | Motorized Shade with 3" Fascia | Motorized Shade with 4" Fascia | | Motorized Shade with Pocket Headrail | |
|---|---|---|---|---|---|---|---|---|---|---|---|---|---|---|---|
| | | | | | 24v | 110v | 24v | 24v | 24v | 24v | 24v | 24v | 110v | 24v | 110v |
| 7% Sheerweave 5000 | 98" | NO | NO | Non-Railroaded | | | | | | | | | | | |
| *(R34_Q46)* | | | | Maximum Width | 98" | 98" | 88" | 88" | 98" | 98" | 98" | 98" | 98" | 98" | 98" |
| | | | | | Maximum Height | | | | | | | | | | |
| | | | | For Shade Widths to 72" | 144" | 144" | 102" | 102" | 66" | 102" | 90" | 144" | 144" | 144" | 108" |
| | | | | For Shade Widths to 84" | 126" | 144" | 102" | 102" | 66" | 102" | 90" | 126" | 144" | 126" | 108" |
| | | | | For Shade Widths to 88" | 96" | 144" | 96" | 96" | 66" | 96" | 90" | 96" | 144" | 96" | 108" |
| | | | | For Shade Widths to 90" | 96" | 144" | NA | NA | 66" | 96" | 90" | 96" | 144" | 96" | 108" |
| | | | | For Shade Widths over 90" | 60" | 144" | NA | NA | 60" | 60" | 60" | 60" | 144" | 60" | 108" |
| 7% Sheerweave 5000 | 98" | NO | NO | Non-Railroaded | | | | | | | | | | | |
| *(R34_08, 09)* | | | | Maximum Width | 98" | 98" | 88" | 88" | 98" | 98" | 98" | 98" | 98" | 98" | 98" |
| | | | | | Maximum Height | | | | | | | | | | |
| | | | | For Shade Widths to 72" | 144" | 144" | 144" | 144" | 78" | 126" | 108" | 144" | 144" | 144" | 132" |
| | | | | For Shade Widths to 84" | 126" | 144" | 144" | 144" | 78" | 126" | 108" | 126" | 144" | 126" | 132" |
| | | | | For Shade Widths to 88" | 96" | 144" | 138" | 138" | 78" | 96" | 96" | 96" | 144" | 96" | 132" |
| | | | | For Shade Widths to 90" | 96" | 144" | NA | NA | 78" | 96" | 96" | 96" | 144" | 96" | 132" |
| | | | | For Shade Widths to 96" | 78" | 144" | NA | NA | 78" | 78" | 78" | 78" | 144" | 78" | 132" |
| | | | | For Shade Widths over 96" | 60" | 144" | NA | NA | 60" | 60" | 60" | 60" | 144" | 60" | 132" |
| 7% Sheerweave 5000 | 98" | NO | NO | Non-Railroaded | | | | | | | | | | | |
| *(R34_S73)* | | | | Maximum Width | 96" | 98" | 88" | 88" | 96" | 96" | 96" | 96" | 98" | 96" | 98" |
| | | | | | Maximum Height | | | | | | | | | | |
| | | | | For Shade Widths to 54" | 144" | 144" | 96" | 96" | 60" | 96" | 84" | 144" | 144" | 138" | 102" |
| | | | | For Shade Widths to 60" | 144" | 144" | 96" | 96" | 60" | 96" | 84" | 144" | 144" | 138" | 102" |
| | | | | For Shade Widths to 66" | 144" | 144" | 96" | 96" | 60" | 96" | 84" | 144" | 144" | 138" | 102" |
| | | | | For Shade Widths to 72" | 144" | 144" | 96" | 96" | 60" | 96" | 84" | 144" | 144" | 138" | 102" |
| | | | | For Shade Widths to 78" | 144" | 144" | 96" | 96" | 60" | 96" | 84" | 144" | 144" | 138" | 102" |
| | | | | For Shade Widths to 84" | 126" | 144" | 96" | 96" | 60" | 96" | 84" | 126" | 144" | 126" | 102" |
| | | | | For Shade Widths to 88" | 96" | 144" | 96" | 96" | 60" | 96" | 84" | 96" | 144" | 96" | 102" |
| | | | | For Shade Widths to 90" | 96" | 144" | NA | NA | 60" | 96" | 84" | 96" | 144" | 96" | 102" |
| | | | | For Shade Widths over 90" | 78" | 144" | NA | NA | 60" | 78" | 78" | 78" | 144" | 78" | 102" |
| 10% E Screen | 122" | YES | YES | Non-Railroaded | | | | | | | | | | | |
| | | | | Maximum Width | 108" | 120" | 108" | 108" | 108" | 108" | 108" | 108" | 120" | 108" | 120" |
| | | | | | Maximum Height | | | | | | | | | | |
| | | | | For Shade Widths to 84" | 144" | 144" | 144" | 144" | 138" | 144" | 144" | 144" | 144" | 144" | 144" |
| | | | | For Shade Widths to 90" | 138" | 144" | 138" | 138" | 138" | 138" | 138" | 138" | 144" | 138" | 144" |
| | | | | For Shade Widths to 96" | 108" | 144" | 108" | 108" | 108" | 108" | 108" | 108" | 144" | 108" | 144" |
| | | | | For Shade Widths to 102" | 84" | 144" | 84" | 84" | 84" | 84" | 84" | 84" | 144" | 84" | 144" |
| | | | | For Shade Widths over 102" | 66" | 144" | 66" | 66" | 66" | 66" | 66" | 66" | 144" | 66" | 144" |
| | | | | Railroaded | | | | | | | | | | | |
| | | | | Maximum Width | 108" | 144" | 108" | 108" | 108" | 108" | 108" | 108" | 144" | 108" | 144" |
| | | | | | Maximum Height | | | | | | | | | | |
| | | | | For Shade Widths to 84" | 144" | 144" | 144" | 144" | 138" | 144" | 144" | 144" | 144" | 144" | 144" |
| | | | | For Shade Widths to 90" | 138" | 144" | 138" | 138" | 138" | 138" | 138" | 138" | 144" | 138" | 144" |
| | | | | For Shade Widths to 96" | 108" | 144" | 108" | 108" | 108" | 108" | 108" | 108" | 144" | 108" | 144" |
| | | | | For Shade Widths to 102" | 84" | 144" | 84" | 84" | 84" | 84" | 84" | 84" | 144" | 84" | 144" |
| | | | | For Shade Widths over 102" | 66" | 144" | 66" | 66" | 66" | 66" | 66" | 66" | 144" | 66" | 144" |
| 10% Sheerweave 2360 | 126" | NO | NO | Non-Railroaded | | | | | | | | | | | |
| | | | | Maximum Width | 102" | 126" | 102" | 102" | 102" | 102" | 102" | 102" | 126" | 102" | 126" |
| | | | | | Maximum Height | | | | | | | | | | |
| | | | | For Shade Widths to 66" | 144" | 144" | 144" | 144" | 138" | 144" | 144" | 144" | 144" | 144" | 144" |
| | | | | For Shade Widths to 72" | 144" | 144" | 144" | 144" | 138" | 144" | 144" | 144" | 144" | 144" | 144" |
| | | | | For Shade Widths to 78" | 144" | 144" | 144" | 144" | 138" | 144" | 144" | 144" | 144" | 144" | 144" |
| | | | | For Shade Widths to 84" | 144" | 144" | 144" | 144" | 138" | 144" | 144" | 144" | 144" | 144" | 144" |
| | | | | For Shade Widths to 90" | 138" | 144" | 138" | 138" | 138" | 138" | 138" | 138" | 144" | 138" | 144" |
| | | | | For Shade Widths to 96" | 108" | 144" | 108" | 108" | 102" | 108" | 108" | 108" | 144" | 108" | 144" |
| | | | | For Shade Widths to 102" | 84" | 144" | 84" | 84" | 84" | 84" | 84" | 84" | 144" | 84" | 144" |
| | | | | For Shade Widths over 102" | NA | 144" | NA | NA | NA | NA | NA | NA | 144" | NA | 144" |

# PRODUCT SIZE SPECIFICATIONS – HARDWIRED MOTORIZATION

## Minimum and Maximum Standards

Please Note: Shade sizes that are wider than the fabric roll width indicated will be made with the fabric turned width for length (railroaded). The maximum width for non-railroaded shades is the roll width unless otherwise noted.

Fabrics turned width for length will have a visible seam when fabricated longer than their maximum roll width less 10". Fabrics turned width for length may have an edge curl. This is not considered a defect in the product.

| Motor Type | Motor Name | Min Width | Min Height | Weight Capacity |
|---|---|---|---|---|
| 24v Low-Voltage | ST-30 Quiet | 18-1/2" | 12" | Lifts up to 23 lbs. |
| 110v Hardwired | ST-50 Quiet | 33" | 12" | Lifts up to 52 lbs. |
| 110v Hardwired | ST-50 Ultra Quiet | 39" | 12" | Lifts up to 52 lbs. |

Note: 110v Motorized shades are available without top treatment, with 4" R-series Fascia, or with Pocket. Maximum width for each coupled shade is 120" and maximum overall width is 216". 4" R-series Fascia & Pocket will spliced in the center when width exceed 190".

| Material Name | Roll Width | Railroad Option | Splice /Seam | | Motorized Shade without Top Treament | | Motorized Shade Deluxe Valance | Motorized Shade Fabric Valance | Motorized Shade with Medium Cassette | Motorized Shade with Large Cassette | Motorized Shade with 3" Fascia | Motorized Shade with 4" Fascia | | Motorized Shade with Pocket Headrail | |
|---|---|---|---|---|---|---|---|---|---|---|---|---|---|---|---|
| | | | | | 24v | 110v | 24v | 24v | 24v | 24v | 24v | 24v | 110v | 24v | 110v |
| 10% Sheerweave 4100 | 98" | YES | YES | Non-Railroaded | | | | | | | | | | | |
| | | | | Maximum Width | 96" | 98" | 88" | 88" | 96" | 96" | 96" | 96" | 98" | 96" | 98" |
| | | | | | Maximum Height | | | | | | | | | | |
| | | | | For Shade Widths to 54" | 144" | 144" | 120" | 120" | 78" | 120" | 108" | 144" | 144" | 144" | 144" |
| | | | | For Shade Widths to 60" | 144" | 144" | 120" | 120" | 78" | 120" | 108" | 144" | 144" | 144" | 144" |
| | | | | For Shade Widths to 66" | 144" | 144" | 120" | 120" | 78" | 120" | 108" | 144" | 144" | 144" | 144" |
| | | | | For Shade Widths to 72" | 144" | 144" | 120" | 120" | 78" | 120" | 108" | 144" | 144" | 144" | 144" |
| | | | | For Shade Widths to 78" | 144" | 144" | 120" | 120" | 78" | 120" | 108" | 144" | 144" | 144" | 144" |
| | | | | For Shade Widths to 84" | 126" | 144" | 120" | 120" | 78" | 120" | 108" | 126" | 144" | 126" | 144" |
| | | | | For Shade Widths to 88" | 96" | 144" | 96" | 96" | 78" | 96" | 96" | 96" | 144" | 96" | 144" |
| | | | | For Shade Widths to 90" | 96" | 144" | N/A | N/A | 78" | 96" | 96" | 96" | 144" | 96" | 144" |
| | | | | For Shade Widths to 96" | 78" | 144" | N/A | N/A | 78" | 78" | 78" | 78" | 144" | 78" | 144" |
| | | | | For Shade Widths to 98" | NA | 144" | NA | NA | NA | NA | NA | NA | 144" | NA | 144" |
| | | | | Railroaded | | | | | | | | | | | |
| | | | | Maximum Width | 96" | 120" | 96" | 96" | 96" | 96" | 96" | 96" | 120" | 96" | 120" |
| | | | | | Maximum Height | | | | | | | | | | |
| | | | | For Shade Widths to 54" | 120" | 120" | 120" | 120" | 78" | 120" | 108" | 120" | 120" | 120" | 120" |
| | | | | For Shade Widths to 60" | 120" | 120" | 120" | 120" | 78" | 120" | 108" | 120" | 120" | 120" | 120" |
| | | | | For Shade Widths to 66" | 120" | 120" | 120" | 120" | 78" | 120" | 108" | 120" | 120" | 120" | 120" |
| | | | | For Shade Widths to 72" | 120" | 120" | 120" | 120" | 78" | 120" | 108" | 120" | 120" | 120" | 120" |
| | | | | For Shade Widths to 78" | 120" | 120" | 120" | 120" | 78" | 120" | 108" | 120" | 120" | 120" | 120" |
| | | | | For Shade Widths to 84" | 120" | 120" | 120" | 120" | 78" | 120" | 108" | 120" | 120" | 120" | 120" |
| | | | | For Shade Widths to 90" | 96" | 120" | 96" | 96" | 78" | 96" | 96" | 96" | 120" | 96" | 120" |
| | | | | For Shade Widths to 96" | 78" | 120" | 78" | 78" | 78" | 78" | 78" | 78" | 120" | 78" | 120" |
| | | | | For Shade Widths over 96" | NA | 120" | N/A | N/A | N/A | N/A | N/A | NA | 120" | NA | 114" |
| 10% Sheerweave 5000 *(R26_03)* | 98" | NO | NO | Non-Railroaded | | | | | | | | | | | |
| | | | | Maximum Width | 98" | 98" | 88" | 88" | 98" | 98" | 98" | 98" | 98" | 98" | 98" |
| | | | | | Maximum Height | | | | | | | | | | |
| | | | | For Shade Widths to 72" | 144" | 144" | 90" | 90" | 54" | 90" | 78" | 144" | 144" | 126" | 96" |
| | | | | For Shade Widths to 84" | 126" | 144" | 90" | 90" | 54" | 90" | 78" | 126" | 144" | 126" | 96" |
| | | | | For Shade Widths to 88" | 96" | 144" | 90" | 90" | 54" | 90" | 78" | 96" | 144" | 96" | 96" |
| | | | | For Shade Widths to 90" | 96" | 144" | NA | NA | 54" | 90" | 78" | 96" | 144" | 96" | 96" |
| | | | | For Shade Widths over 90" | 60" | 144" | NA | NA | 54" | 60" | 60" | 60" | 144" | 60" | 96" |
| 10% Sheerweave 5000 *(R26_U16, U24, U28, U29)* | 98" | NO | NO | Non-Railroaded | | | | | | | | | | | |
| | | | | Maximum Width | 96" | 98" | 88" | 88" | 96" | 96" | 96" | 96" | 98" | 96" | 98" |
| | | | | | Maximum Height | | | | | | | | | | |
| | | | | For Shade Widths to 54" | 144" | 144" | 96" | 96" | 60" | 96" | 90" | 144" | 144" | 144" | 108" |
| | | | | For Shade Widths to 60" | 144" | 144" | 96" | 96" | 60" | 96" | 90" | 144" | 144" | 144" | 108" |
| | | | | For Shade Widths to 66" | 144" | 144" | 96" | 96" | 60" | 96" | 90" | 144" | 144" | 144" | 108" |
| | | | | For Shade Widths to 72" | 144" | 144" | 96" | 96" | 60" | 96" | 90" | 144" | 144" | 144" | 108" |
| | | | | For Shade Widths to 78" | 144" | 144" | 96" | 96" | 60" | 96" | 90" | 144" | 144" | 144" | 108" |
| | | | | For Shade Widths to 84" | 126" | 144" | 96" | 96" | 60" | 96" | 90" | 126" | 144" | 126" | 108" |
| | | | | For Shade Widths to 88" | 96" | 144" | 96" | 96" | 60" | 96" | 90" | 96" | 144" | 96" | 108" |
| | | | | For Shade Widths to 90" | 96" | 144" | NA | NA | 60" | 96" | 90" | 96" | 144" | 96" | 108" |
| | | | | For Shade Widths over 90" | 78" | 144" | NA | NA | 60" | 78" | 78" | 78" | 144" | 78" | 108" |

# PRODUCT SIZE SPECIFICATIONS – HARDWIRED MOTORIZATION

## Minimum and Maximum Standards

Please Note: Shade sizes that are wider than the fabric roll width indicated will be made with the fabric turned width for length (railroaded). The maximum width for non-railroaded shades is the roll width unless otherwise noted.

Fabrics turned width for length will have a visible seam when fabricated longer than their maximum roll width less 10". Fabrics turned width for length may have an edge curl. This is not considered a defect in the product.

| Motor Type | Motor Name | Min Width | Min Height | Weight Capacity |
|---|---|---|---|---|
| 24v Low-Voltage | ST-30 Quiet | 18-1/2" | 12" | Lifts up to 23 lbs. |
| 110v Hardwired | ST-50 Quiet | 33" | 12" | Lifts up to 52 lbs. |
| 110v Hardwired | ST-50 Ultra Quiet | 39" | 12" | Lifts up to 52 lbs. |

Note: 110v Motorized shades are available without top treatment, with 4" R-series Fascia, or with Pocket. Maximum width for each coupled shade is 120" and maximum overall width is 216". 4" R-series Fascia & Pocket will spliced in the center when width exceed 190".

| Material Name | Roll Width | Railroad Option | Splice /Seam | | Motorized Shade without Top Treament | | Motorized Shade Deluxe Valance | Motorized Shade Fabric Valance | Motorized Shade with Medium Cassette | Motorized Shade with Large Cassette | Motorized Shade with 3" Fascia | Motorized Shade with 4" Fascia | | Motorized Shade with Pocket Headrail | |
|---|---|---|---|---|---|---|---|---|---|---|---|---|---|---|---|
| | | | | | 24v | 110v | 24v | 24v | 24v | 24v | 24v | 24v | 110v | 24v | 110v |
| **Alexandria** | 78" | NO | NO | **Non-Railroaded** | | | | | | | | | | | |
| | | | | **Maximum Width** | 78" | 78" | 68" | 68" | 78" | 78" | 78" | 78" | 78" | 78" | 78" |
| | | | | | Maximum Height | | | | | | | | | | |
| | | | | For Shade Widths to 68" | 144" | 144" | 144" | 144" | 144" | 144" | 144" | 144" | 144" | 144" | 144" |
| | | | | For Shade Widths to 78" | 144" | 144" | NA | NA | 144" | 144" | 144" | 144" | 144" | 144" | 144" |
| **Astaire** | 94" | NO | NO | **Non-Railroaded** | | | | | | | | | | | |
| | | | | **Maximum Width** | 94" | 94" | NA | NA | 94" | 94" | 94" | 94" | 94" | 94" | 94" |
| | | | | | Maximum Height | | | | | | | | | | |
| | | | | For Shade Widths to 94" | 144" | 144" | NA | NA | 78" | 120" | 108" | 144" | 144" | 144" | 130" |
| **Avila R Blackout** | 118" | YES | YES | **Non-Railroaded** | | | | | | | | | | | |
| | | | | **Maximum Width** | 108" | 118" | 108" | 108" | 108" | 108" | 108" | 108" | 118" | 108" | 118" |
| | | | | | Maximum Height | | | | | | | | | | |
| | | | | For Shade Widths to 84" | 144" | 144" | 144" | 144" | 144" | 144" | 144" | 144" | 144" | 144" | 144" |
| | | | | For Shade Widths to 90" | 138" | 144" | 138" | 138" | 138" | 138" | 138" | 138" | 144" | 138" | 144" |
| | | | | For Shade Widths to 96" | 108" | 144" | 108" | 108" | 108" | 108" | 108" | 108" | 144" | 108" | 144" |
| | | | | For Shade Widths over 96" | 66" | 144" | 66" | 66" | 66" | 66" | 66" | 66" | 144" | 66" | 144" |
| | | | | **Railroaded** | | | | | | | | | | | |
| | | | | **Maximum Width** | 108" | 120" | 108" | 108" | 108" | 108" | 108" | 108" | 120" | 108" | 120" |
| | | | | | Maximum Height | | | | | | | | | | |
| | | | | For Shade Widths to 90" | 120" | 120" | 120" | 120" | 120" | 120" | 120" | 120" | 120" | 120" | 120" |
| | | | | For Shade Widths to 96" | 108" | 120" | 108" | 108" | 108" | 108" | 108" | 108" | 120" | 108" | 120" |
| | | | | For Shade Widths over 96" | 66" | 120" | 66" | 66" | 66" | 66" | 66" | 66" | 120" | 66" | 120" |
| **Baroque** | 78" | NO | NO | **Non-Railroaded** | | | | | | | | | | | |
| | | | | **Maximum Width** | 78" | 78" | 68" | 68" | 78" | 78" | 78" | 78" | 78" | 78" | 78" |
| | | | | | Maximum Height | | | | | | | | | | |
| | | | | For Shade Widths to 68" | 144" | 144" | 144" | 144" | 144" | 144" | 144" | 144" | 144" | 144" | 144" |
| | | | | For Shade Widths to 78" | 144" | 144" | NA | NA | 144" | 144" | 144" | 144" | 144" | 144" | 144" |
| **Blackout - Solid** | 72" | YES | YES | **Non-Railroaded** | | | | | | | | | | | |
| | | | | **Maximum Width** | 72" | 72" | 62" | 62" | 72" | 72" | 72" | 72" | 72" | 72" | 72" |
| | | | | | Maximum Height | | | | | | | | | | |
| | | | | For Shade Widths to 62" | 144" | 144" | 144" | NA | 144" | 144" | 144" | 144" | 144" | 144" | 144" |
| | | | | For Shade Widths to 72" | 144" | 144" | NA | NA | 144" | 144" | 144" | 144" | 144" | 144" | 144" |
| | | | | | *Fabric and Deluxe valance - max shade size is 62" x 144" | | | | | | | | | | |
| | | | | **Railroaded** | | | | | | | | | | | |
| | | | | **Maximum Width** | 102" | 144" | 102" | 102" | 102" | 102" | 102" | 102" | 144" | 102" | 144" |
| | | | | | Maximum Height | | | | | | | | | | |
| | | | | For Shade Widths to 90" | 130" | 130" | 130" | NA | 130" | 130" | 130" | 130" | 130" | 130" | 130" |
| | | | | For Shade Widths to 96" | 108" | 130" | 108" | NA | 108" | 108" | 108" | 108" | 130" | 108" | 130" |
| | | | | For Shade Widths to 102" | 84" | 130" | 84" | NA | 84" | 84" | 84" | 84" | 130" | 84" | 130" |
| | | | | For Shade Widths over 102" | NA | 130" | NA | NA | NA | NA | NA | NA | 130" | NA | 130" |
| **Brilliance** | 118" | NO | NO | **Non-Railroaded** | | | | | | | | | | | |
| | | | | **Maximum Width** | 118" | 118" | 108" | 108" | 118" | 118" | 118" | 118" | 118" | 118" | 118" |
| | | | | | Maximum Height | | | | | | | | | | |
| | | | | For Shade Widths to 96" | 144" | 144" | 144" | 144" | 144" | 144" | 144" | 144" | 144" | 144" | 144" |
| | | | | For Shade Widths over 96" | 60" | 144" | 60" | 60" | 60" | 60" | 60" | 60" | 144" | 60" | 144" |
| **Brilliance Blackout** | 118" | NO | NO | **Non-Railroaded** | | | | | | | | | | | |
| | | | | **Maximum Width** | 108" | 118" | 108" | 108" | 108" | 108" | 108" | 108" | 118" | 108" | 118" |
| | | | | | Maximum Height | | | | | | | | | | |
| | | | | For Shade Widths to 84" | 144" | 144" | 144" | 144" | 114" | 144" | 144" | 144" | 144" | 144" | 144" |
| | | | | For Shade Widths to 90" | 138" | 144" | 138" | 138" | 114" | 138" | 138" | 138" | 144" | 138" | 144" |
| | | | | For Shade Widths to 96" | 108" | 144" | 108" | 108" | 108" | 108" | 108" | 108" | 144" | 108" | 144" |
| | | | | For Shade Widths over 96" | 66" | 144" | 66" | 66" | 66" | 66" | 66" | 66" | 144" | 66" | 144" |

# PRODUCT SIZE SPECIFICATIONS – HARDWIRED MOTORIZATION

## Minimum and Maximum Standards

Please Note: Shade sizes that are wider than the fabric roll width indicated will be made with the fabric turned width for length (railroaded). The maximum width for non-railroaded shades is the roll width unless otherwise noted.

Fabrics turned width for length will have a visible seam when fabricated longer than their maximum roll width less 10". Fabrics turned width for length may have an edge curl. This is not considered a defect in the product.

| Motor Type | Motor Name | Min Width | Min Height | Weight Capacity |
|---|---|---|---|---|
| 24v Low-Voltage | ST-30 Quiet | 18-1/2" | 12" | Lifts up to 23 lbs. |
| 110v Hardwired | ST-50 Quiet | 33" | 12" | Lifts up to 52 lbs. |
| 110v Hardwired | ST-50 Ultra Quiet | 39" | 12" | Lifts up to 52 lbs. |

Note: 110v Motorized shades are available without top treatment, with 4" R-series Fascia, or with Pocket. Maximum width for each coupled shade is 120" and maximum overall width is 216". 4" R-series Fascia & Pocket will spliced in the center when width exceed 190".

| Material Name | Roll Width | Railroad Option | Splice /Seam | | Motorized Shade without Top Treament | | Motorized Shade Deluxe Valance | Motorized Shade Fabric Valance | Motorized Shade with Medium Cassette | Motorized Shade with Large Cassette | Motorized Shade with 3" Fascia | Motorized Shade with 4" Fascia | | Motorized Shade with Pocket Headrail | |
|---|---|---|---|---|---|---|---|---|---|---|---|---|---|---|---|
| | | | | | 24v | 110v | 24v | 24v | 24v | 24v | 24v | 24v | 110v | 24v | 110v |
| Carrara | 110" | NO | NO | Non-Railroaded | | | | | | | | | | | |
| | | | | Maximum Width | 110" | 110" | 100" | 100" | 110" | 110" | 110" | 110" | 110" | 110" | 110" |
| | | | | | Maximum Height | | | | | | | | | | |
| | | | | For Shade Widths to 66" | 144" | 144" | 144" | 144" | 144" | 144" | 144" | 144" | 144" | 144" | 144" |
| | | | | For Shade Widths to 78" | 144" | 144" | 144" | 144" | 144" | 144" | 144" | 144" | 144" | 144" | 144" |
| | | | | For Shade Widths to 90" | 138" | 144" | 138" | 138" | 138" | 138" | 138" | 138" | 144" | 138" | 144" |
| | | | | For Shade Widths to 100" | 84" | 144" | 84" | 84" | 84" | 84" | 84" | 84" | 144" | 84" | 144" |
| | | | | For Shade Widths to 102" | 84" | 144" | NA | NA | 84" | 84" | 84" | 84" | 144" | 84" | 144" |
| | | | | For Shade Widths to 108" | 66" | 144" | NA | NA | 66" | 66" | 66" | 66" | 144" | 66" | 144" |
| | | | | For Shade Widths to 110" | 48" | 144" | NA | NA | 48" | 48" | 48" | 48" | 144" | 48" | 144" |
| Carrara Blackout | 110" | NO | NO | Non-Railroaded | | | | | | | | | | | |
| | | | | Maximum Width | 102" | 110" | 100" | 100" | 102" | 102" | 102" | 102" | 110" | 102" | 110" |
| | | | | | Maximum Height | | | | | | | | | | |
| | | | | For Shade Widths to 72" | 144" | 144" | 144" | 144" | 96" | 144" | 132" | 144" | 144" | 144" | 144" |
| | | | | For Shade Widths to 84" | 126" | 144" | 126" | 126" | 96" | 126" | 126" | 126" | 144" | 126" | 144" |
| | | | | For Shade Widths to 90" | 96" | 144" | 96" | 96" | 96" | 96" | 96" | 96" | 144" | 96" | 144" |
| | | | | For Shade Widths to 96" | 78" | 144" | 78" | 78" | 78" | 78" | 78" | 78" | 144" | 78" | 144" |
| | | | | For Shade Widths over 96" | 60" | 144" | 60" | 60" | 60" | 60" | 60" | 60" | 144" | 60" | 138" |
| Claudio | 110" | NO | NO | Non-Railroaded | | | | | | | | | | | |
| | | | | Maximum Width | 110" | 110" | 100" | 100" | 110" | 110" | 110" | 110" | 110" | 110" | 110" |
| | | | | | Maximum Height | | | | | | | | | | |
| | | | | For Shade Widths to 96" | 144" | 144" | 144" | 144" | 144" | 144" | 144" | 144" | 144" | 144" | 144" |
| | | | | For Shade Widths over 96" | 84" | 144" | 144" | 144" | 84" | 84" | 84" | 84" | 144" | 84" | 144" |
| Claudio Blackout | 110" | NO | NO | Non-Railroaded | | | | | | | | | | | |
| | | | | Maximum Width | 108" | 110" | 100" | 100" | 108" | 108" | 108" | 108" | 110" | 108" | 110" |
| | | | | | Maximum Height | | | | | | | | | | |
| | | | | For Shade Widths to 84" | 144" | 144" | 144" | 144" | 114" | 144" | 144" | 144" | 144" | 144" | 144" |
| | | | | For Shade Widths to 90" | 138" | 144" | 138" | 138" | 114" | 138" | 138" | 138" | 144" | 138" | 144" |
| | | | | For Shade Widths to 96" | 108" | 144" | 108" | 108" | 108" | 108" | 108" | 108" | 144" | 108" | 144" |
| | | | | For Shade Widths over 96" | 66" | 144" | 66" | 66" | 66" | 66" | 66" | 66" | 144" | 66" | 144" |
| Cusco | 110" | YES | YES | Non-Railroaded | | | | | | | | | | | |
| | | | | Maximum Width | 102" | 110" | 100" | 100" | 102" | 102" | 102" | 102" | 110" | 102" | 110" |
| | | | | | Maximum Height | | | | | | | | | | |
| | | | | For Shade Widths to 84" | 144" | 144" | 144" | 144" | 132" | 144" | 144" | 144" | 144" | 144" | 144" |
| | | | | For Shade Widths to 90" | 138" | 144" | 138" | 138" | 132" | 138" | 138" | 138" | 144" | 138" | 144" |
| | | | | For Shade Widths to 96" | 108" | 144" | 108" | 108" | 108" | 108" | 108" | 108" | 144" | 108" | 144" |
| | | | | For Shade Widths to 100" | 84" | 144" | 84" | 84" | 84" | 84" | 84" | 84" | 144" | 84" | 144" |
| | | | | For Shade Widths to 102" | 84" | 144" | NA | NA | 84" | 84" | 84" | 84" | 144" | 84" | 144" |
| | | | | For Shade Widths over 102" | NA | 144" | NA | NA | NA | NA | NA | NA | 144" | NA | 144" |
| | | | | Railroaded | | | | | | | | | | | |
| | | | | Maximum Width | 102" | 144" | 102" | 102" | 102" | 102" | 102" | 102" | 144" | 102" | 144" |
| | | | | | Maximum Height | | | | | | | | | | |
| | | | | For Shade Widths to 84" | 144" | 144" | 144" | 144" | 132" | 144" | 144" | 144" | 144" | 144" | 144" |
| | | | | For Shade Widths to 90" | 138" | 144" | 138" | 138" | 132" | 138" | 138" | 138" | 144" | 138" | 144" |
| | | | | For Shade Widths to 96" | 108" | 144" | 108" | 108" | 108" | 108" | 108" | 108" | 144" | 108" | 144" |
| | | | | For Shade Widths to 102" | 84" | 144" | 84" | 84" | 84" | 84" | 84" | 84" | 144" | 84" | 144" |
| | | | | For Shade Widths over 102" | NA | 144" | NA | NA | NA | NA | NA | NA | 144" | NA | 132" |
| Darien | 90" | NO | NO | Non-Railroaded | | | | | | | | | | | |
| | | | | Maximum Width | 90" | 90" | 80" | 80" | 90" | 90" | 90" | 90" | 90" | 90" | 90" |
| | | | | | Maximum Height | | | | | | | | | | |
| | | | | For Shade Widths to 80" | 144" | 144" | 144" | 144" | 144" | 144" | 144" | 144" | 144" | 144" | 144" |
| | | | | For Shade Widths to 90" | 144" | 144" | NA | NA | 144" | 144" | 144" | 144" | 144" | 144" | 144" |

# PRODUCT SIZE SPECIFICATIONS – HARDWIRED MOTORIZATION

## Minimum and Maximum Standards

Please Note: Shade sizes that are wider than the fabric roll width indicated will be made with the fabric turned width for length (railroaded). The maximum width for non-railroaded shades is the roll width unless otherwise noted.

Fabrics turned width for length will have a visible seam when fabricated longer than their maximum roll width less 10". Fabrics turned width for length may have an edge curl. This is not considered a defect in the product.

| Motor Type | Motor Name | Min Width | Min Height | Weight Capacity |
|---|---|---|---|---|
| 24v Low-Voltage | ST-30 Quiet | 18-1/2" | 12" | Lifts up to 23 lbs. |
| 110v Hardwired | ST-50 Quiet | 33" | 12" | Lifts up to 52 lbs. |
| 110v Hardwired | ST-50 Ultra Quiet | 39" | 12" | Lifts up to 52 lbs. |

Note: 110v Motorized shades are available without top treatment, with 4" R-series Fascia, or with Pocket. Maximum width for each coupled shade is 120" and maximum overall width is 216". 4" R-series Fascia & Pocket will spliced in the center when width exceed 190".

| Material Name | Roll Width | Railroad Option | Splice /Seam | | Motorized Shade without Top Treament | | Motorized Shade Deluxe Valance | Motorized Shade Fabric Valance | Motorized Shade with Medium Cassette | Motorized Shade with Large Cassette | Motorized Shade with 3" Fascia | Motorized Shade with 4" Fascia | | Motorized Shade with Pocket Headrail | |
|---|---|---|---|---|---|---|---|---|---|---|---|---|---|---|---|
| | | | | | 24v | 110v | 24v | 24v | 24v | 24v | 24v | 24v | 110v | 24v | 110v |
| Drizzle | 94" | YES | YES | Non-Railroaded | | | | | | | | | | | |
| | | | | Maximum Width | 94" | 94" | 84" | 84" | 94" | 94" | 94" | 94" | 94" | 94" | 94" |
| | | | | | Maximum Height | | | | | | | | | | |
| | | | | For Shade Widths to 68" | 144" | 144" | 144" | 144" | 144" | 144" | 144" | 144" | 144" | 144" | 144" |
| | | | | For Shade Widths to 78" | 144" | 144" | 144" | 144" | 144" | 144" | 144" | 144" | 144" | 144" | 144" |
| | | | | For Shade Widths to 84" | 144" | 144" | 144" | 144" | 144" | 144" | 144" | 144" | 144" | 144" | 144" |
| | | | | For Shade Widths to 90" | 144" | 144" | NA | NA | 144" | 144" | 144" | 144" | 144" | 144" | 144" |
| | | | | For Shade Widths over 90" | 144" | 144" | NA | NA | 144" | 144" | 144" | 144" | 144" | 144" | 144" |
| | | | | Railroaded | | | | | | | | | | | |
| | | | | Maximum Width | 120" | 120" | 120" | 120" | 120" | 120" | 120" | 120" | 120" | 120" | 120" |
| | | | | | Maximum Height | | | | | | | | | | |
| | | | | For Shade Widths to 78" | 144" | 144" | 144" | 144" | 144" | 144" | 144" | 144" | 144" | 144" | 144" |
| | | | | For Shade Widths to 96" | 120" | 120" | 120" | 120" | 120" | 120" | 120" | 120" | 120" | 120" | 120" |
| | | | | For Shade Width to over 96" | 60" | 120" | 60" | 60" | 60" | 60" | 60" | 60" | 120" | 60" | 120" |
| Fiona | 78" | NO | NO | Non-Railroaded | | | | | | | | | | | |
| | | | | Maximum Width | 78" | 78" | 68" | 68" | 78" | 78" | 78" | 78" | 78" | 78" | 78" |
| | | | | | Maximum Height | | | | | | | | | | |
| | | | | For Shade Widths to 68" | 144" | 144" | 144" | 144" | 144" | 144" | 144" | 144" | 144" | 144" | 144" |
| | | | | For Shade Widths to 78" | 144" | 144" | NA | NA | 144" | 144" | 144" | 144" | 144" | 144" | 144" |
| Flocke Blackout | 94" | YES | YES | Non-Railroaded | | | | | | | | | | | |
| | | | | Maximum Width | 94" | 94" | 84" | 84" | 94" | 94" | 94" | 94" | 94" | 94" | 94" |
| | | | | | Maximum Height | | | | | | | | | | |
| | | | | For Shade Widths to 72" | 144" | 144" | 144" | 144" | 126" | 144" | 144" | 144" | 144" | 144" | 144" |
| | | | | For Shade Widths to 84" | 126" | 144" | 126" | 126" | 126" | 126" | 126" | 126" | 144" | 126" | 144" |
| | | | | For Shade Widths to 90" | 96" | 144" | NA | NA | 96" | 96" | 96" | 96" | 144" | 96" | 144" |
| | | | | For Shade Widths over 90" | 78" | 144" | NA | NA | 78" | 78" | 78" | 78" | 144" | 78" | 144" |
| | | | | Railroaded | | | | | | | | | | | |
| | | | | Maximum Width | 102" | 144" | 102" | 102" | 102" | 102" | 102" | 102" | 144" | 102" | 144" |
| | | | | | Maximum Height | | | | | | | | | | |
| | | | | For Shade Widths to 72" | 144" | 144" | 144" | 144" | 126" | 144" | 144" | 144" | 144" | 144" | 144" |
| | | | | For Shade Widths to 84" | 126" | 144" | 126" | 126" | 126" | 126" | 126" | 126" | 144" | 126" | 144" |
| | | | | For Shade Widths to 90" | 96" | 144" | 96" | 96" | 96" | 96" | 96" | 96" | 144" | 96" | 144" |
| | | | | For Shade Widths over 90" | 60" | 144" | 60" | 60" | 60" | 60" | 60" | 60" | 144" | 60" | 132" |
| Hayworth | 98" | YES | YES | Non-Railroaded | | | | | | | | | | | |
| | | | | Maximum Width | 98" | 98" | 88" | 88" | 98" | 98" | 98" | 98" | 98" | 98" | 98" |
| | | | | | Maximum Height | | | | | | | | | | |
| | | | | For Shade Widths to 88" | 144" | 144" | 144" | 144" | 144" | 144" | 144" | 144" | 144" | 144" | 144" |
| | | | | For Shade Widths over 88" | 144" | 144" | NA | NA | 144" | 144" | 144" | 144" | 144" | 144" | 144" |
| | | | | Railroaded | | | | | | | | | | | |
| | | | | Maximum Width | 120" | 144" | 120" | 120" | 120" | 120" | 120" | 120" | 144" | 120" | 144" |
| | | | | | Maximum Height | | | | | | | | | | |
| | | | | For Shade Widths to 102" | 144" | 144" | 144" | 144" | 144" | 144" | 144" | 144" | 144" | 144" | 144" |
| | | | | For Shade Widths to 108" | 108" | 144" | 108" | 108" | 108" | 108" | 108" | 108" | 144" | 108" | 144" |
| | | | | For Shade Widths to 114" | 84" | 144" | 84" | 84" | 84" | 84" | 84" | 84" | 144" | 84" | 144" |
| | | | | For Shade Widths to 120" | 60" | 144" | 60" | 60" | 60" | 60" | 60" | 60" | 144" | 60" | 144" |
| | | | | For Shade Widths over 120" | NA | 144" | NA | NA | NA | NA | NA | NA | 144" | NA | 144" |
| Illusion | 72" | YES | NO | Non-Railroaded | | | | | | | | | | | |
| | | | | Maximum Width | 72" | 72" | 62" | 62" | 72" | 72" | 72" | 72" | 72" | 72" | 72" |
| | | | | | Maximum Height | | | | | | | | | | |
| | | | | For Shade Widths to 62" | 144" | 144" | 144" | 144" | 144" | 144" | 144" | 144" | 144" | 144" | 144" |
| | | | | For Shade Widths to 72" | 144" | 144" | NA | NA | 144" | 144" | 144" | 144" | 144" | 144" | 144" |
| | | | | Railroaded | | | | | | | | | | | |
| | | | | Maximum Width | 120" | 144" | 120" | 120" | 120" | 120" | 120" | 120" | 144" | 120" | 144" |
| | | | | | Maximum Height | | | | | | | | | | |
| | | | | For Shade Widths to max width | 60" | 57" | 60" | 60" | 60" | 60" | 60" | 60" | 57" | 60" | 57" |

# PRODUCT SIZE SPECIFICATIONS – HARDWIRED MOTORIZATION

## Minimum and Maximum Standards

Please Note: Shade sizes that are wider than the fabric roll width indicated will be made with the fabric turned width for length (railroaded). The maximum width for non-railroaded shades is the roll width unless otherwise noted.

Fabrics turned width for length will have a visible seam when fabricated longer than their maximum roll width less 10". Fabrics turned width for length may have an edge curl. This is not considered a defect in the product.

| Motor Type | Motor Name | Min Width | Min Height | Weight Capacity |
|---|---|---|---|---|
| 24v Low-Voltage | ST-30 Quiet | 18-1/2" | 12" | Lifts up to 23 lbs. |
| 110v Hardwired | ST-50 Quiet | 33" | 12" | Lifts up to 52 lbs. |
| 110v Hardwired | ST-50 Ultra Quiet | 39" | 12" | Lifts up to 52 lbs. |

Note: 110v Motorized shades are available without top treatment, with 4" R-series Fascia, or with Pocket. Maximum width for each coupled shade is 120" and maximum overall width is 216". 4" R-series Fascia & Pocket will spliced in the center when width exceed 190".

| Material Name | Roll Width | Railroad Option | Splice /Seam | | Motorized Shade without Top Treament | | Motorized Shade Deluxe Valance | Motorized Shade Fabric Valance | Motorized Shade with Medium Cassette | Motorized Shade with Large Cassette | Motorized Shade with 3" Fascia | Motorized Shade with 4" Fascia | | Motorized Shade with Pocket Headrail | |
|---|---|---|---|---|---|---|---|---|---|---|---|---|---|---|---|
| | | | | | 24v | 110v | 24v | 24v | 24v | 24v | 24v | 24v | 110v | 24v | 110v |
| Jasper | 110" | YES | YES | Non-Railroaded | | | | | | | | | | | |
| | | | | Maximum Width | 108" | 110" | 100" | 100" | 108" | 108" | 108" | 108" | 110" | 108" | 110" |
| | | | | | Maximum Height | | | | | | | | | | |
| | | | | For Shade Widths to 84" | 144" | 144" | 144" | 144" | 144" | 144" | 144" | 144" | 144" | 144" | 144" |
| | | | | For Shade Widths to 90" | 138" | 144" | 138" | 138" | 138" | 138" | 138" | 138" | 144" | 138" | 144" |
| | | | | For Shade Widths to 96" | 108" | 144" | 108" | 108" | 108" | 108" | 108" | 108" | 144" | 108" | 144" |
| | | | | For Shade Widths to 100" | 84" | 144" | 84" | 84" | 84" | 84" | 84" | 84" | 144" | 84" | 144" |
| | | | | For Shade Widths over 100" | 66" | 144" | N/A | N/A | 66" | 66" | 66" | 66" | 144" | 66" | 144" |
| | | | | Railroaded | | | | | | | | | | | |
| | | | | Maximum Width | 108" | 144" | 108" | 108" | 108" | 108" | 108" | 108" | 144" | 108" | 144" |
| | | | | | Maximum Height | | | | | | | | | | |
| | | | | For Shade Widths to 84" | 144" | 144" | 144" | 144" | 144" | 144" | 144" | 144" | 144" | 144" | 144" |
| | | | | For Shade Widths to 90" | 138" | 144" | 138" | 138" | 138" | 138" | 138" | 138" | 144" | 138" | 144" |
| | | | | For Shade Widths over 96" | 108" | 144" | 108" | 108" | 108" | 108" | 108" | 108" | 144" | 108" | 144" |
| | | | | For Shade Widths over 96" | 66" | 144" | 66" | 66" | 66" | 66" | 66" | 66" | 144" | 66" | 144" |
| Linview | 122" | YES | YES | Non-Railroaded | | | | | | | | | | | |
| | | | | Maximum Width | 108" | 122" | 108" | 108" | 108" | 108" | 108" | 108" | 122" | 108" | 122" |
| | | | | | Maximum Height | | | | | | | | | | |
| | | | | For Shade Widths to 96" | 144" | 144" | 144" | 144" | 144" | 144" | 144" | 144" | 144" | 144" | 144" |
| | | | | For Shade Widths to 102" | 144" | 144" | 144" | 144" | 144" | 144" | 144" | 144" | 144" | 144" | 144" |
| | | | | For Shade Widths over 102" | 108" | 144" | 108" | 108" | 108" | 108" | 108" | 108" | 144" | 108" | 144" |
| | | | | Maximum Width | 108" | 120" | 108" | 108" | 108" | 108" | 108" | 108" | 120" | 108" | 120" |
| | | | | | Maximum Height | | | | | | | | | | |
| | | | | For Shade Widths to 96" | 120" | 120" | 120" | 120" | 120" | 120" | 120" | 120" | 120" | 120" | 120" |
| | | | | For Shade Widths to 102" | 120" | 120" | 120" | 120" | 120" | 120" | 120" | 120" | 120" | 120" | 120" |
| | | | | For Shade Widths over 102" | 108" | 120" | 108" | 108" | 108" | 108" | 108" | 108" | 120" | 108" | 120" |
| Linview Blackout | 94" | NO | NO | Non-Railroaded | | | | | | | | | | | |
| | | | | Maximum Width | 94" | 94" | 84" | 84" | 94" | 94" | 94" | 94" | 94" | 94" | 94" |
| | | | | | Maximum Height | | | | | | | | | | |
| | | | | For Shade Widths to 84" | 144" | 144" | 144" | 144" | 144" | 144" | 144" | 144" | 144" | 144" | 144" |
| | | | | For Shade Widths to 90" | 138" | 144" | NA | NA | 138" | 138" | 138" | 138" | 144" | 138" | 144" |
| | | | | For Shade Widths over 90" | 108" | 144" | NA | NA | 108" | 108" | 108" | 108" | 144" | 108" | 144" |
| Montero | 94" | NO | NO | Non-Railroaded | | | | | | | | | | | |
| | | | | Maximum Width | 94" | 94" | 84" | 84" | 94" | 94" | 94" | 94" | 94" | 94" | 94" |
| | | | | | Maximum Height | | | | | | | | | | |
| | | | | For Shade Widths to 84" | 144" | 144" | 144" | 144" | 126" | 144" | 144" | 144" | 144" | 144" | 144" |
| | | | | For Shade Widths to 90" | 138" | 144" | NA | NA | 126" | 138" | 138" | 138" | 144" | 138" | 144" |
| | | | | For Shade Widths over 90" | 108" | 144" | NA | NA | 108" | 108" | 108" | 108" | 144" | 108" | 144" |
| Moravia | 96" | NO | NO | Non-Railroaded | | | | | | | | | | | |
| | | | | Maximum Width | 96" | 96" | 86" | 86" | 96" | 96" | 96" | 96" | 96" | 96" | 96" |
| | | | | | Maximum Height | | | | | | | | | | |
| | | | | For Shade Widths to 86" | 144" | 144" | 144" | 144" | 138" | 144" | 144" | 144" | 144" | 144" | 144" |
| | | | | For Shade Widths over 86" | 144" | 144" | NA | NA | 138" | 144" | 144" | 144" | 144" | 144" | 144" |
| Santa Cruz | 94" | NO | NO | Non-Railroaded | | | | | | | | | | | |
| | | | | Maximum Width | 94" | 94" | 84" | 84" | 94" | 94" | 94" | 94" | 94" | 94" | 94" |
| | | | | | Maximum Height | | | | | | | | | | |
| | | | | For Shade Widths to 84" | 144" | 144" | 144" | 144" | 138" | 144" | 144" | 144" | 144" | 144" | 144" |
| | | | | For Shade Widths to 90" | 138" | 144" | NA | NA | 138" | 138" | 138" | 138" | 144" | 138" | 144" |
| | | | | For Shade Widths over 90" | 108" | 144" | NA | NA | 108" | 108" | 108" | 108" | 144" | 108" | 144" |
| Santa Cruz Blackout | 94" | NO | NO | Non-Railroaded | | | | | | | | | | | |
| | | | | Maximum Width | 94" | 94" | 84" | 84" | 94" | 94" | 94" | 94" | 94" | 94" | 94" |
| | | | | | Maximum Height | | | | | | | | | | |
| | | | | For Shade Widths to 72" | 144" | 144" | 144" | 144" | 102" | 144" | 138" | 144" | 144" | 144" | 144" |
| | | | | For Shade Widths to 84" | 126" | 144" | 126" | 126" | 102" | 126" | 126" | 126" | 144" | 126" | 144" |
| | | | | For Shade Widths to 90" | 96" | 144" | NA | NA | 96" | 96" | 96" | 96" | 144" | 96" | 144" |
| | | | | For Shade Widths over 90" | 78" | 144" | NA | NA | 78" | 78" | 78" | 78" | 144" | 78" | 144" |

# PRODUCT SIZE SPECIFICATIONS – HARDWIRED MOTORIZATION

## Minimum and Maximum Standards

Please Note: Shade sizes that are wider than the fabric roll width indicated will be made with the fabric turned width for length (railroaded). The maximum width for non-railroaded shades is the roll width unless otherwise noted.

Fabrics turned width for length will have a visible seam when fabricated longer than their maximum roll width less 10". Fabrics turned width for length may have an edge curl. This is not considered a defect in the product.

| Motor Type | Motor Name | Min Width | Min Height | Weight Capacity |
|---|---|---|---|---|
| 24v Low-Voltage | ST-30 Quiet | 18-1/2" | 12" | Lifts up to 23 lbs. |
| 110v Hardwired | ST-50 Quiet | 33" | 12" | Lifts up to 52 lbs. |
| 110v Hardwired | ST-50 Ultra Quiet | 39" | 12" | Lifts up to 52 lbs. |

Note: 110v Motorized shades are available without top treatment, with 4" R-series Fascia, or with Pocket. Maximum width for each coupled shade is 120" and maximum overall width is 216". 4" R-series Fascia & Pocket will spliced in the center when width exceed 190".

| Material Name | Roll Width | Railroad Option | Splice /Seam | | Motorized Shade without Top Treament | | Motorized Shade Deluxe Valance | Motorized Shade Fabric Valance | Motorized Shade with Medium Cassette | Motorized Shade with Large Cassette | Motorized Shade with 3" Fascia | Motorized Shade with 4" Fascia | | Motorized Shade with Pocket Headrail | |
|---|---|---|---|---|---|---|---|---|---|---|---|---|---|---|---|
| | | | | | 24v | 110v | 24v | 24v | 24v | 24v | 24v | 24v | 110v | 24v | 110v |
| Scala Blackout | 110" | YES | YES | Non-Railroaded | | | | | | | | | | | |
| | | | | Maximum Width | 102" | 110" | 100" | 100" | 102" | 102" | 102" | 102" | 110" | 102" | 110" |
| | | | | | Maximum Height | | | | | | | | | | |
| | | | | For Shade Widths to 84" | 144" | 144" | 144" | NA | 144" | 144" | 144" | 144" | 144" | 144" | 144" |
| | | | | For Shade Widths to 90" | 138" | 144" | 138" | NA | 138" | 138" | 138" | 138" | 144" | 138" | 144" |
| | | | | For Shade Widths to 96" | 108" | 144" | 108" | NA | 108" | 108" | 108" | 108" | 144" | 108" | 144" |
| | | | | For Shade Widths to 100" | 84" | 144" | 84" | NA | 84" | 84" | 84" | 84" | 144" | 84" | 144" |
| | | | | For Shade Widths to 102" | 84" | 144" | NA | NA | 84" | 84" | 84" | 84" | 144" | 84" | 144" |
| | | | | For Shade Widths over 102" | NA | 144" | NA | NA | NA | NA | NA | NA | 144" | NA | 144" |
| | | | | Railroaded | | | | | | | | | | | |
| | | | | Maximum Width | 102" | 144" | 102" | 102" | 102" | 102" | 102" | 102" | 144" | 102" | 144" |
| | | | | | Maximum Height | | | | | | | | | | |
| | | | | For Shade Widths to 84" | 144" | 144" | 144" | NA | 144" | 144" | 144" | 144" | 144" | 144" | 144" |
| | | | | For Shade Widths to 90" | 138" | 144" | 138" | NA | 138" | 138" | 138" | 138" | 144" | 138" | 144" |
| | | | | For Shade Widths to 96" | 108" | 144" | 108" | NA | 108" | 108" | 108" | 108" | 144" | 108" | 144" |
| | | | | For Shade Widths to 102" | 84" | 144" | 84" | NA | 84" | 84" | 84" | 84" | 144" | 84" | 144" |
| | | | | For Shade Widths over 102" | NA | 144" | NA | NA | NA | NA | NA | NA | 144" | NA | 144" |
| Sheerweave 7200R | 118" | NO | NO | Non-Railroaded | | | | | | | | | | | |
| | | | | Maximum Width | 102" | 118" | 102" | 102" | 102" | 102" | 102" | 102" | 118" | 102" | 118" |
| | | | | | Maximum Height | | | | | | | | | | |
| | | | | For Shade Widths to 66" | 144" | 144" | 144" | 144" | 114" | 144" | 144" | 144" | 144" | 144" | 144" |
| | | | | For Shade Widths to 72" | 144" | 144" | 144" | 144" | 114" | 144" | 144" | 144" | 144" | 144" | 144" |
| | | | | For Shade Widths to 78" | 144" | 144" | 144" | 144" | 114" | 144" | 144" | 144" | 144" | 144" | 144" |
| | | | | For Shade Widths to 84" | 144" | 144" | 144" | 144" | 114" | 144" | 144" | 144" | 144" | 144" | 144" |
| | | | | For Shade Widths to 90" | 138" | 144" | 138" | 138" | 114 | 138" | 138" | 138" | 144" | 138" | 144" |
| | | | | For Shade Widths to 96" | 108" | 144" | 108" | 108" | 108" | 108" | 108" | 108" | 144" | 108" | 144" |
| | | | | For Shade Widths to 102" | 84" | 144" | 84" | 84" | 84" | 84" | 84" | 84" | 144" | 84" | 144" |
| | | | | For Shade Widths over 102" | NA | 144" | N/A | N/A | N/A | N/A | N/A | NA | 144" | NA | 120" |
| Sheerweave 7250R | 118" | NO | NO | Non-Railroaded | | | | | | | | | | | |
| | | | | Maximum Width | 96" | 96" | 96" | 96" | 96" | 96" | 96" | 96" | 96" | 96" | 96" |
| | | | | | Maximum Height | | | | | | | | | | |
| | | | | For Shade Widths to 96" | 120" | 120" | 120" | 120" | 120" | 120" | 120" | 120" | 120" | 120" | 120" |
| Sheerweave 7400 | 118" | NO | NO | Non-Railroaded | | | | | | | | | | | |
| | | | | Maximum Width | 96" | 116" | 96" | 96" | 96" | 96" | 96" | 96" | 116" | 96" | 116" |
| | | | | | Maximum Height | | | | | | | | | | |
| | | | | For Shade Widths to 54" | 144" | 144" | 132" | 132" | 84" | 132" | 114" | 144" | 144" | 144" | 144" |
| | | | | For Shade Widths to 60" | 144" | 144" | 132" | 132" | 84" | 132" | 114" | 144" | 144" | 144" | 144" |
| | | | | For Shade Widths to 66" | 144" | 144" | 132" | 132" | 84" | 132" | 114" | 144" | 144" | 144" | 144" |
| | | | | For Shade Widths to 72" | 144" | 144" | 132" | 132" | 84" | 132" | 114" | 144" | 144" | 144" | 144" |
| | | | | For Shade Widths to 78" | 144" | 144" | 132" | 132" | 84" | 132" | 114" | 144" | 144" | 144" | 144" |
| | | | | For Shade Widths to 84" | 126" | 144" | 126" | 126" | 84" | 126" | 114" | 126" | 144" | 126" | 144" |
| | | | | For Shade Widths to 90" | 96" | 144" | 96" | 96" | 84" | 96" | 96" | 96" | 144" | 96" | 144" |
| | | | | For Shade Widths to 96" | 78" | 144" | 78" | 78" | 78" | 78" | 78" | 78" | 144" | 78" | 144" |
| | | | | For Shade Widths over 96" | NA | 144" | NA | NA | NA | NA | NA | NA | 144" | NA | 114" |
| Sheerweave 7450 | 118" | NO | NO | Non-Railroaded | | | | | | | | | | | |
| | | | | Maximum Width | 108" | 118" | 108" | 108" | 108" | 108" | 108" | 108" | 118" | 108" | 118" |
| | | | | | Maximum Height | | | | | | | | | | |
| | | | | For Shade Widths to 96" | 144" | 144" | 144" | 144" | 132" | 144" | 144" | 144" | 144" | 144" | 144" |
| | | | | For Shade Widths to 102" | 144" | 144" | 144" | 144" | 132" | 144" | 144" | 144" | 144" | 144" | 144" |
| | | | | For Shade Widths to 108" | 108" | 144" | 108" | 108" | 108" | 108" | 108" | 108" | 144" | 108" | 144" |
| | | | | For Shade Widths over 108" | NA | 144" | NA | NA | NA | NA | NA | NA | 144" | NA | 144" |
| Sheerweave 7500 | 118" | NO | NO | Non-Railroaded | | | | | | | | | | | |
| | | | | Maximum Width | 96" | 96" | 96" | NA | 96" | 96" | 96" | 96" | 96" | 96" | 96" |
| | | | | | Maximum Height | | | | | | | | | | |
| | | | | For Shade Widths to 66" | 120" | 120" | 120" | NA | 120" | 120" | 120" | 120" | 120" | 120" | 120" |
| | | | | For Shade Widths to 72" | 120" | 120" | 120" | NA | 120" | 120" | 120" | 120" | 120" | 120" | 120" |
| | | | | For Shade Widths to 78" | 120" | 120" | 120" | NA | 120" | 120" | 120" | 120" | 120" | 120" | 120" |
| | | | | For Shade Widths to 84" | 120" | 120" | 120" | NA | 120" | 120" | 120" | 120" | 120" | 120" | 120" |
| | | | | For Shade Widths to 90" | 120" | 120" | 120" | NA | 120" | 120" | 120" | 120" | 120" | 120" | 120" |
| | | | | For Shade Widths to 96" | 108" | 120" | 108" | NA | 108" | 108" | 108" | 108" | 120" | 108" | 120" |

# PRODUCT SIZE SPECIFICATIONS – HARDWIRED MOTORIZATION

## Minimum and Maximum Standards

Please Note: Shade sizes that are wider than the fabric roll width indicated will be made with the fabric turned width for length (railroaded). The maximum width for non-railroaded shades is the roll width unless otherwise noted.

Fabrics turned width for length will have a visible seam when fabricated longer than their maximum roll width less 10". Fabrics turned width for length may have an edge curl. This is not considered a defect in the product.

| Motor Type | Motor Name | Min Width | Min Height | Weight Capacity |
|---|---|---|---|---|
| 24v Low-Voltage | ST-30 Quiet | 18-1/2" | 12" | Lifts up to 23 lbs. |
| 110v Hardwired | ST-50 Quiet | 33" | 12" | Lifts up to 52 lbs. |
| 110v Hardwired | ST-50 Ultra Quiet | 39" | 12" | Lifts up to 52 lbs. |

Note: 110v Motorized shades are available without top treatment, with 4" R-series Fascia, or with Pocket. Maximum width for each coupled shade is 120" and maximum overall width is 216". 4" R-series Fascia & Pocket will spliced in the center when width exceed 190".

| Material Name | Roll Width | Railroad Option | Splice /Seam | | Motorized Shade without Top Treament | | Motorized Shade Deluxe Valance | Motorized Shade Fabric Valance | Motorized Shade with Medium Cassette | Motorized Shade with Large Cassette | Motorized Shade with 3" Fascia | Motorized Shade with 4" Fascia | | Motorized Shade with Pocket Headrail | |
|---|---|---|---|---|---|---|---|---|---|---|---|---|---|---|---|
| | | | | | 24v | 110v | 24v | 24v | 24v | 24v | 24v | 24v | 110v | 24v | 110v |
| **Sheerweave 7500R** | **118"** | NO | NO | **Non-Railroaded** | | | | | | | | | | | |
| | | | | **Maximum Width** | **102"** | **118"** | **102"** | **NA** | **102"** | **102"** | **102"** | **102"** | **118"** | **102"** | **118"** |
| | | | | | **Maximum Height** | | | | | | | | | | |
| | | | | **For Shade Widths to 66"** | 144" | 144" | 144" | NA | 144" | 144" | 144" | 144" | 144" | 144" | 144" |
| | | | | **For Shade Widths to 72"** | 144" | 144" | 144" | NA | 144" | 144" | 144" | 144" | 144" | 144" | 144" |
| | | | | **For Shade Widths to 78"** | 144" | 144" | 144" | NA | 144" | 144" | 144" | 144" | 144" | 144" | 144" |
| | | | | **For Shade Widths to 84"** | 144" | 144" | 144" | NA | 144" | 144" | 144" | 144" | 144" | 144" | 144" |
| | | | | **For Shade Widths to 90"** | 138" | 144" | 138" | NA | 138" | 138" | 138" | 138" | 144" | 138" | 144" |
| | | | | **For Shade Widths to 96"** | 108" | 144" | 108" | NA | 108" | 108" | 108" | 108" | 144" | 108" | 144" |
| | | | | **For Shade Widths to 102"** | 84" | 144" | 84" | NA | 84" | 84" | 84" | 84" | 144" | 84" | 144" |
| | | | | **For Shade Widths over 102"** | NA | 144" | NA | NA | NA | NA | NA | NA | 144" | NA | 144" |
| **Sheerweave 7600** | **118"** | NO | NO | **Non-Railroaded** | | | | | | | | | | | |
| | | | | **Maximum Width** | **102"** | **118"** | **102"** | **102"** | **102"** | **102"** | **102"** | **102"** | **118"** | **102"** | **118"** |
| | | | | | **Maximum Height** | | | | | | | | | | |
| | | | | **For Shade Widths to 66"** | 144" | 144" | 144" | 144" | 126" | 144" | 144" | 144" | 144" | 144" | 144" |
| | | | | **For Shade Widths to 72"** | 144" | 144" | 144" | 144" | 126" | 144" | 144" | 144" | 144" | 144" | 144" |
| | | | | **For Shade Widths to 78"** | 144" | 144" | 144" | 144" | 126" | 144" | 144" | 144" | 144" | 144" | 144" |
| | | | | **For Shade Widths to 84"** | 144" | 144" | 144" | 144" | 126" | 144" | 144" | 144" | 144" | 144" | 144" |
| | | | | **For Shade Widths to 90"** | 138" | 144" | 138" | 138" | 126" | 138" | 138" | 138" | 144" | 138" | 144" |
| | | | | **For Shade Widths to 96"** | 108" | 144" | 108" | 108" | 108" | 108" | 108" | 108" | 144" | 108" | 144" |
| | | | | **For Shade Widths to 102"** | 84" | 144" | 84" | 84" | 84" | 84" | 84" | 84" | 144" | 84" | 144" |
| | | | | **For Shade Widths over 102"** | NA | 144" | NA | NA | NA | NA | NA | NA | 144" | NA | 132" |
| **Sheerweave 7650** | **118"** | NO | NO | **Non-Railroaded** | | | | | | | | | | | |
| | | | | **Maximum Width** | **108"** | **116"** | **108"** | **108"** | **108"** | **108"** | **108"** | **108"** | **116"** | **108"** | **116"** |
| | | | | | **Maximum Height** | | | | | | | | | | |
| | | | | **For Shade Widths to 96"** | 144" | 144" | 144" | 144" | 144" | 144" | 144" | 144" | 144" | 144" | 144" |
| | | | | **For Shade Widths to 102"** | 144" | 144" | 144" | 144" | 144" | 144" | 144" | 144" | 144" | 144" | 144" |
| | | | | **For Shade Widths to 108"** | 108" | 144" | 108" | 108" | 108" | 108" | 108" | 108" | 144" | 108" | 144" |
| | | | | **For Shade Widths over 108"** | NA | 144" | NA | NA | NA | NA | NA | NA | 144" | NA | 144" |
| **Sheerweave 7700R** | **118"** | **NO** | **NO** | **Non-Railroaded** | | | | | | | | | | | |
| | | | | **Maximum Width** | **96"** | **118"** | **96"** | **96"** | **96"** | **96"** | **96"** | **96"** | **118"** | **96"** | **118"** |
| | | | | | **Maximum Height** | | | | | | | | | | |
| | | | | **For Shade Widths to 72"** | 144" | 144" | 144" | 144" | 96" | 144" | 132" | 144" | 144" | 144" | 144" |
| | | | | **For Shade Widths to 78"** | 144" | 144" | 144" | 144" | 96" | 144" | 132" | 144" | 144" | 144" | 144" |
| | | | | **For Shade Widths to 84"** | 126" | 144" | 126" | 126" | 96" | 126" | 126" | 126" | 144" | 126" | 144" |
| | | | | **For Shade Widths to 90"** | 96" | 144" | 96" | 96" | 96" | 96" | 96" | 96" | 144" | 96" | 144" |
| | | | | **For Shade Widths to 96"** | 78" | 144" | 78" | 78" | 78" | 78" | 78" | 78" | 144" | 78" | 144" |
| | | | | **For Shade Widths over to 96"** | N/A | 144" | N/A | N/A | N/A | N/A | N/A | N/A | 144" | N/A | 144" |
| **Sheerweave 7750R** | **118"** | **NO** | **NO** | **Non-Railroaded** | | | | | | | | | | | |
| | | | | **Maximum Width** | **98"** | **98"** | **98"** | **98"** | **98"** | **98"** | **98"** | **98"** | **98"** | **98"** | **98"** |
| | | | | | **Maximum Height** | | | | | | | | | | |
| | | | | **For Shade Widths to 66"** | 120" | 120" | 120" | 120" | 120" | 120" | 120" | 120" | 120" | 120" | 120" |
| | | | | **For Shade Widths to 72"** | 120" | 120" | 120" | 120" | 120" | 120" | 120" | 120" | 120" | 120" | 120" |
| | | | | **For Shade Widths to 78"** | 120" | 120" | 120" | 120" | 120" | 120" | 120" | 120" | 120" | 120" | 120" |
| | | | | **For Shade Widths to 84"** | 120" | 120" | 120" | 120" | 120" | 120" | 120" | 120" | 120" | 120" | 120" |
| | | | | **For Shade Widths to 90"** | 120" | 120" | 120" | 120" | 120" | 120" | 120" | 120" | 120" | 120" | 120" |
| | | | | **For Shade Widths to 96"** | 108" | 120" | 108" | 108" | 108" | 108" | 108" | 108" | 120" | 108" | 120" |
| | | | | **For Shade Widths to 98"** | 84" | 120" | 84" | 84" | 84" | 84" | 84" | 84" | 120" | 84" | 120" |
| **Sorrento** | **108"** | **NO** | **NO** | **Non-Railroaded** | | | | | | | | | | | |
| | | | | **Maximum Width** | **108"** | **108"** | **98"** | **98"** | **108"** | **108"** | **108"** | **108"** | **108"** | **108"** | **108"** |
| | | | | | **Maximum Height** | | | | | | | | | | |
| | | | | **For Shade Widths to 96"** | 144" | 144" | 144" | 144" | 108" | 144" | 144" | 144" | 144" | 144" | 144" |
| | | | | **For Shade Widths over 96"** | 108" | 144" | 108" | 108" | 108" | 108" | 108" | 108" | 144" | 108" | 144" |

# PRODUCT SIZE SPECIFICATIONS – HARDWIRED MOTORIZATION

## Minimum and Maximum Standards

Please Note: Shade sizes that are wider than the fabric roll width indicated will be made with the fabric turned width for length (railroaded). The maximum width for non-railroaded shades is the roll width unless otherwise noted.

Fabrics turned width for length will have a visible seam when fabricated longer than their maximum roll width less 10". Fabrics turned width for length may have an edge curl. This is not considered a defect in the product.

| Motor Type | Motor Name | Min Width | Min Height | Weight Capacity |
|---|---|---|---|---|
| 24v Low-Voltage | ST-30 Quiet | 18-1/2" | 12" | Lifts up to 23 lbs. |
| 110v Hardwired | ST-50 Quiet | 33" | 12" | Lifts up to 52 lbs. |
| 110v Hardwired | ST-50 Ultra Quiet | 39" | 12" | Lifts up to 52 lbs. |

Note: 110v Motorized shades are available without top treatment, with 4" R-series Fascia, or with Pocket. Maximum width for each coupled shade is 120" and maximum overall width is 216". 4" R-series Fascia & Pocket will spliced in the center when width exceed 190".

| Material Name | Roll Width | Railroad Option | Splice /Seam | | Motorized Shade without Top Treament | | Motorized Shade Deluxe Valance | Motorized Shade Fabric Valance | Motorized Shade with Medium Cassette | Motorized Shade with Large Cassette | Motorized Shade with 3" Fascia | Motorized Shade with 4" Fascia | | Motorized Shade with Pocket Headrail | |
|---|---|---|---|---|---|---|---|---|---|---|---|---|---|---|---|
| | | | | | 24v | 110v | 24v | 24v | 24v | 24v | 24v | 24v | 110v | 24v | 110v |
| Sunscreen 7000 | 118" | YES | YES | Non-Railroaded | | | | | | | | | | | |
| | | | | Maximum Width | 102" | 118" | 102" | 102" | 102" | 102" | 102" | 102" | 118" | 102" | 118" |
| | | | | | Maximum Height | | | | | | | | | | |
| | | | | For Shade Widths to 72" | 144" | 144" | 144" | 144" | 96" | 144" | 132" | 144" | 144" | 144" | 144" |
| | | | | For Shade Widths to 84" | 126" | 144" | 126" | 126" | 96" | 126" | 126" | 126" | 144" | 126" | 144" |
| | | | | For Shade Widths to 90" | 96" | 144" | 96" | 96" | 96" | 96" | 96" | 96" | 144" | 96" | 144" |
| | | | | For Shade Widths to 96" | 78" | 144" | 78" | 78" | 78" | 78" | 78" | 78" | 144" | 78" | 144" |
| | | | | For Shade Widths over 96" | 60" | 144" | 60" | 60" | 60" | 60" | 60" | 60" | 144" | 60" | 114" |
| | | | | Railroaded | | | | | | | | | | | |
| | | | | Maximum Width | 102" | 144" | 102" | 102" | 102" | 102" | 102" | 102" | 144" | 102" | 144" |
| | | | | | Maximum Height | | | | | | | | | | |
| | | | | For Shade Widths to 72" | 144" | 144" | 144" | 144" | 96" | 144" | 132" | 144" | 144" | 144" | 144" |
| | | | | For Shade Widths to 84" | 126" | 144" | 126" | 126" | 96" | 126" | 126" | 126" | 144" | 126" | 144" |
| | | | | For Shade Widths to 90" | 96" | 144" | 96" | 96" | 96" | 96" | 96" | 96" | 144" | 96" | 144" |
| | | | | For Shade Widths to 96" | 78" | 144" | 78" | 78" | 78" | 78" | 78" | 78" | 144" | 78" | 144" |
| | | | | For Shade Widths over 96" | 60" | 144" | 60" | 60" | 60" | 60" | 60" | 60" | 144" | 60" | 102" |
| Tundra | 94" | NO | NO | Non-Railroaded | | | | | | | | | | | |
| | | | | Maximum Width | 94" | 94" | 84" | 84" | 94" | 94" | 94" | 94" | 94" | 94" | 94" |
| | | | | | Maximum Height | | | | | | | | | | |
| | | | | For Shade Widths to 84" | 144" | 144" | 144" | 144" | 144" | 144" | 144" | 144" | 144" | 144" | 144" |
| | | | | For Shade Widths to 90" | 144" | 144" | N/A | N/A | 144" | 144" | 144" | 144" | 144" | 144" | 144" |
| | | | | For Shade Widths to 94" | 144" | 144" | N/A | N/A | 144" | 144" | 144" | 144" | 144" | 144" | 144" |
| Tundra Blackout | 94" | NO | NO | Non-Railroaded | | | | | | | | | | | |
| | | | | Maximum Width | 94" | 94" | 84" | 84" | 94" | 94" | 94" | 94" | 94" | 94" | 94" |
| | | | | | Maximum Height | | | | | | | | | | |
| | | | | For Shade Widths to 66" | 120" | 120" | 120" | 120" | 120" | 120" | 120" | 120" | 120" | 120" | 120" |
| | | | | For Shade Widths to 72" | 120" | 120" | 120" | 120" | 120" | 120" | 120" | 120" | 120" | 120" | 120" |
| | | | | For Shade Widths to 78" | 120" | 120" | 120" | 120" | 120" | 120" | 120" | 120" | 120" | 120" | 120" |
| | | | | For Shade Widths to 84" | 120" | 120" | 120" | 120" | 120" | 120" | 120" | 120" | 120" | 120" | 120" |
| | | | | For Shade Widths to 90" | 120" | 120" | NA | NA | 120" | 120" | 120" | 120" | 120" | 120" | 120" |
| | | | | For Shade Widths to 94" | 108" | 120" | NA | NA | 108" | 108" | 108" | 108" | 120" | 108" | 120" |
| Uptown *(R79_02)* | 78" | YES | NO | Non-Railroaded | | | | | | | | | | | |
| | | | | Maximum Width | 78" | 78" | 68" | 68" | 78" | 78" | 78" | 78" | 78" | 78" | 78" |
| | | | | | Maximum Height | | | | | | | | | | |
| | | | | For Shade Widths to 68" | 144" | 144" | 144" | 144" | 144" | 144" | 144" | 144" | 144" | 144" | 144" |
| | | | | For Shade Widths to 78" | 144" | 144" | NA | NA | 144" | 144" | 144" | 144" | 144" | 144" | 144" |
| | | | | Railroaded | | | | | | | | | | | |
| | | | | Maximum Width | 120" | 144" | 120" | 120" | 120" | 120" | 120" | 120" | 144" | 120" | 144" |
| | | | | | Maximum Height | | | | | | | | | | |
| | | | | For Shade Widths to 102" | 66" | 63" | 66" | 66" | 66" | 66" | 66" | 66" | 63" | 66" | 63" |
| | | | | For Shade Widths over 102" | 60" | 63" | 60" | 60" | 60" | 60" | 60" | 60" | 63" | 60" | 63" |
| Uptown Room Darkening *(R79_01)* | 78" | YES | NO | Non-Railroaded | | | | | | | | | | | |
| | | | | Maximum Width | 78" | 78" | 68" | 68" | 78" | 78" | 78" | 78" | 78" | 78" | 78" |
| | | | | | Maximum Height | | | | | | | | | | |
| | | | | For Shade Widths to 68" | 144" | 144" | 144" | 144" | 144" | 144" | 144" | 144" | 144" | 144" | 144" |
| | | | | For Shade Widths to 78" | 144" | 144" | NA | NA | 144" | 144" | 144" | 144" | 144" | 144" | 144" |
| | | | | Railroaded | | | | | | | | | | | |
| | | | | Maximum Width | 108" | 144" | 108" | 108" | 108" | 108" | 108" | 144" | 144" | 108" | 144" |
| | | | | | Maximum Height | | | | | | | | | | |
| | | | | For Shade Widths to max width | 66" | 63" | 66" | 66" | 66" | 66" | 66" | 66" | 63" | 66" | 63" |

# PRODUCT SIZE SPECIFICATIONS – HARDWIRED MOTORIZATION

## Minimum and Maximum Standards

Please Note: Shade sizes that are wider than the fabric roll width indicated will be made with the fabric turned width for length (railroaded). The maximum width for non-railroaded shades is the roll width unless otherwise noted.

Fabrics turned width for length will have a visible seam when fabricated longer than their maximum roll width less 10". Fabrics turned width for length may have an edge curl. This is not considered a defect in the product.

| Motor Type | Motor Name | Min Width | Min Height | Weight Capacity |
|---|---|---|---|---|
| 24v Low-Voltage | ST-30 Quiet | 18-1/2" | 12" | Lifts up to 23 lbs. |
| 110v Hardwired | ST-50 Quiet | 33" | 12" | Lifts up to 52 lbs. |
| 110v Hardwired | ST-50 Ultra Quiet | 39" | 12" | Lifts up to 52 lbs. |

Note: 110v Motorized shades are available without top treatment, with 4" R-series Fascia, or with Pocket. Maximum width for each coupled shade is 120" and maximum overall width is 216". 4" R-series Fascia & Pocket will spliced in the center when width exceed 190".

| Material Name | Roll Width | Railroad Option | Splice /Seam | | Motorized Shade without Top Treament | | Motorized Shade Deluxe Valance | Motorized Shade Fabric Valance | Motorized Shade with Medium Cassette | Motorized Shade with Large Cassette | Motorized Shade with 3" Fascia | Motorized Shade with 4" Fascia | | Motorized Shade with Pocket Headrail | |
|---|---|---|---|---|---|---|---|---|---|---|---|---|---|---|---|
| | | | | | 24v | 110v | 24v | 24v | 24v | 24v | 24v | 24v | 110v | 24v | 110v |
| World Textures 1 | 78" | YES | YES | Non-Railroaded | | | | | | | | | | | |
| | | | | Maximum Width | 78" | 78" | 68" | 68" | 78" | 78" | 78" | 78" | 78" | 78" | 78" |
| | | | | | Maximum Height | | | | | | | | | | |
| | | | | For Shade Widths to 68" | 144" | 144" | 144" | 144" | 138" | 144" | 144" | 144" | 144" | 144" | 144" |
| | | | | For Shade Widths to 78" | 144" | 144" | NA | NA | 138" | 144" | 144" | 144" | 144" | 144" | 144" |
| | | | | Railroaded | | | | | | | | | | | |
| | | | | Maximum Width | 108" | 144" | 108" | 108" | 108" | 108" | 108" | 108" | 144" | 108" | 144" |
| | | | | | Maximum Height | | | | | | | | | | |
| | | | | For Shade Widths to 84" | 144" | 144" | 144" | 144" | 138" | 144" | 144" | 144" | 144" | 144" | 144" |
| | | | | For Shade Widths to 90" | 138" | 144" | 138" | 138" | 138" | 138" | 138" | 138" | 144" | 138" | 144" |
| | | | | For Shade Widths to 96" | 108" | 144" | 108" | 108" | 108" | 108" | 108" | 108" | 144" | 108" | 144" |
| | | | | For Shade Widths to 102" | 84" | 144" | 84" | 84" | 84" | 84" | 84" | 84" | 144" | 84" | 144" |
| | | | | For Shade Widths over 102" | 66" | 144" | 66" | 66" | 66" | 66" | 66" | 66" | 144" | 66" | 144" |
| World Textures 1 Blackout | 78" | YES | YES | Non-Railroaded | | | | | | | | | | | |
| | | | | Maximum Width | 78" | 78" | 68" | 68" | 78" | 78" | 78" | 78" | 78" | 78" | 78" |
| | | | | | Maximum Height | | | | | | | | | | |
| | | | | For Shade Widths to 68" | 144" | 144" | 144" | 144" | 114" | 144" | 144" | 144" | 144" | 144" | 144" |
| | | | | For Shade Widths to 78" | 144" | 144" | NA | NA | 114" | 144" | 144" | 144" | 144" | 144" | 144" |
| | | | | Railroaded | | | | | | | | | | | |
| | | | | Maximum Width | 102" | 144" | 102" | 102" | 102" | 102" | 102" | 102" | 144" | 102" | 144" |
| | | | | | Maximum Height | | | | | | | | | | |
| | | | | For Shade Widths to 84" | 144" | 144" | 144" | 144" | 108" | 144" | 144" | 144" | 144" | 144" | 144" |
| | | | | For Shade Widths to 90" | 138" | 144" | 138" | 138" | 108" | 138" | 138" | 138" | 144" | 138" | 144" |
| | | | | For Shade Widths to 96" | 108" | 144" | 108" | 108" | 108" | 108" | 108" | 108" | 144" | 108" | 144" |
| | | | | For Shade Widths to 102" | 84" | 144" | 84" | 84" | 84" | 84" | 84" | 84" | 144" | 84" | 144" |
| | | | | For Shade Widths over 102" | NA | 144" | NA | NA | NA | NA | NA | NA | 144" | NA | 120" |
| World Textures 2 | 80" | YES | YES | Non-Railroaded | | | | | | | | | | | |
| | | | | Maximum Width | 80" | 80" | 70" | 70" | 80" | 80" | 80" | 80" | 80" | 80" | 80" |
| | | | | | Maximum Height | | | | | | | | | | |
| | | | | For Shade Widths to 70" | 144" | 144" | 138" | 138" | 84" | 138" | 120" | 144" | 144" | 144" | 144" |
| | | | | For Shade Widths to 80" | 144" | 144" | NA | NA | 84" | 138" | 120" | 144" | 144" | 144" | 144" |
| | | | | Railroaded | | | | | | | | | | | |
| | | | | Maximum Width | 102" | 144" | 102" | 102" | 102" | 102" | 102" | 102" | 144" | 102" | 144" |
| | | | | | Maximum Height | | | | | | | | | | |
| | | | | For Shade Widths to 84" | 144" | 144" | 138" | 138" | 84" | 138" | 120" | 144" | 144" | 144" | 144" |
| | | | | For Shade Widths to 90" | 138" | 144" | 138" | 138" | 84" | 138" | 120" | 138" | 144" | 138" | 144" |
| | | | | For Shade Widths to 96" | 108" | 144" | 108" | 108" | 84" | 108" | 108" | 108" | 144" | 108" | 144" |
| | | | | For Shade Widths to 102" | 84" | 144" | 84" | 84" | 84" | 84" | 84" | 84" | 144" | 84" | 144" |
| | | | | For Shade Widths over 102" | NA | 144" | NA | NA | NA | NA | NA | NA | 144" | NA | 90" |
| World Textures 2 Blackout | 80" | YES | YES | Non-Railroaded | | | | | | | | | | | |
| | | | | Maximum Width | 80" | 80" | 70" | 70" | 80" | 80" | 80" | 80" | 80" | 80" | 80" |
| | | | | | Maximum Height | | | | | | | | | | |
| | | | | For Shade Widths to 70" | 144" | 144" | 144" | 144" | 114" | 144" | 144" | 144" | 144" | 144" | 144" |
| | | | | For Shade Widths to 80" | 144" | 144" | NA | NA | 114" | 144" | 144" | 144" | 144" | 144" | 144" |
| | | | | Railroaded | | | | | | | | | | | |
| | | | | Maximum Width | 102" | 144" | 102" | 102" | 102" | 102" | 102" | 102" | 144" | 102" | 144" |
| | | | | | Maximum Height | | | | | | | | | | |
| | | | | For Shade Widths to 84" | 144" | 144" | 144" | 144" | 114" | 144" | 144" | 144" | 144" | 144" | 144" |
| | | | | For Shade Widths to 90" | 138" | 144" | 138" | 138" | 114" | 138" | 138" | 138" | 144" | 138" | 144" |
| | | | | For Shade Widths to 96" | 108" | 144" | 108" | 108" | 108" | 108" | 108" | 108" | 144" | 108" | 144" |
| | | | | For Shade Widths to 102" | 84" | 144" | 84" | 84" | 84" | 84" | 84" | 84" | 144" | 84" | 144" |
| | | | | For Shade Widths over 102" | NA | 144" | NA | NA | NA | NA | NA | NA | 144" | NA | 120" |

# MOUNTING REQUIREMENTS

| INSIDE MOUNT | Minimum Mounting Depth | Flush Mounting Depth |
|---|---|---|
| Clutch Roller | 1-1/4" | 2-1/8" to 4" (depending on roll diameter) |
| TouchLift Cordless | 1" | 2" |
| Small Cassette Valance | 1-1/2" | 2-7/8" |
| Medium Cassette Valance | 1-1/2" | 3-3/4" |
| Large Cassette Valance | 1-1/2" | 4-3/8" |
| Deluxe Valance (with returns) | 1 -7/8" | 4-1/4" |
| Deluxe Valance (without returns) | 1-1/4" | 3-1/8" |
| Fabric Valance | 3/4" + shade clearance | 3/4" + shade clearance |
| 3" Fascia (R series) | 2-5/8" | 3-1/8" |
| 3" Fascia (Skyline) | 2-3/4" | 3-1/4" |
| 4" Fascia (R series) | 3-5/8" | 4-1/16" |
| 4" Fascia (Skyline) | 3-3/8" | 4-3/16" |
| Pocket Headrail | 3-5/8" | 4-9/16" |
| Exterior Shades without Cassette | 2" | 2-1/2" |
| Exterior Shades with Cassette | 2-1/2" | 4-1/4" |

| OUTSIDE MOUNT | Minimum Mounting Surface Height |
|---|---|
| Clutch Roller | 1-3/4" |
| TouchLift Cordless | 1-1/2" |
| Small Cassette Valance | 2-3/4" |
| Medium Cassette Valance | 3-1/8" |
| Large Cassette Valance | 4" |
| Deluxe Valance | 2" |
| Fabric Valance | 3" |
| 3" Fascia (R Series) | 2-3/4" |
| 3" Fascia (Skyline) | 2-5/8" |
| 4" Fascia (R Series) | 3-3/4" |
| 4" Fascia (Skyline) | 2-3/4" |
| Pocket Headrail | 3-3/4" |
| Exterior Shades with Cable Guide System | 4" |

| TWO-ON-ONE SHADE SIZE STANDARDS* | |
|---|---|
| Minimum ordered width - Cassette Valance | 16" |
| Maximum Ordered width - Cassette Valance | 144" |
| Maximum Height | See Spec Chart |
| Center Gap | 1/2" |

* Two-on-One shade option is not available with Fascia Options.

Each shade cannot exceed the maximum single shade size allowed for cassette (see shade size specifications)

NOTE: Cassette valances cannot be added to inside mount roller shades after they have been manufactured. They will not fit within the IB measurements.

# CLUTCHES

**The Skyline™ System Clutches and Brackets from Rollease – standard on all shades (R-Series is optional)**

### Skyline
- Features a sleek, rounded profile that's more aesthetically pleasing
- Spring-loaded pin-end technology allows for more flexibility and ease of installation
- Internal spring arrangement provides a smoother feel when pulling the shade up and down
- Universal brackets – color coordinated to clutch (Black or White)
- Rounded end caps provide a more polished look

### R-Series
- Traditional design
- Features traditional blade and end plug bracketing system
- Ideal for commercial applications

# FINISHED DIMENSIONS

**Adjustments are taken from ordered dimensions. Width and height may vary ± 1/8"**

## SKYLINE CLUTCH ROLLER SHADES

**For all options below, Shade Height = Ordered Height**

| INSIDE MOUNT | |
|---|---|
| Shade Width | 1/8" less than ordered width |
| Fabric & Tube Width * | 1-1/8" less than ordered width |

Fabric deduction can be up to 1-5/8" on large shades that use the SL20 or SL30 Clutch

| INSIDE MOUNT - With Fabric Valance | |
|---|---|
| Valance Width | 1/8" less than ordered width |
| Fabric & Tube Width * | 1-1/8" less than ordered width |

| INSIDE MOUNT - With Deluxe Valance | |
|---|---|
| Valance Width (no returns) | 1/8" less than ordered width |
| Valance Width (with returns) | 1-1/8" **greater** than ordered width |
| Fabric & Tube Width * | 1-1/8" less than ordered width |

| INSIDE MOUNT - With Small Cassette | |
|---|---|
| Cassette Width | 1/8" less than ordered width |
| Fabric & Tube Width * | 1-5/16" less than ordered width |

| INSIDE MOUNT - With Medium Cassette | |
|---|---|
| Cassette Width | 1/8" less than ordered width |
| Fabric & Tube Width * | 1-3/8" less than ordered width |

| INSIDE MOUNT - With Large Cassette | |
|---|---|
| Cassette Width | 1/8" less than ordered width |
| Fabric & Tube Width * | 1-3/8" less than ordered width |

| INSIDE MOUNT - With 3" and 4" Fascia | |
|---|---|
| Fascia Width | 1/8" less than ordered width |
| Fabric & Tube Width * | 1-1/8" less than ordered width |

Fabric deduction can be up to 1-5/8" on large shades that use the SL20 or SL30 Clutch

| INSIDE MOUNT - With 4" Pocket | |
|---|---|
| Pocket Width | 1/8" less than ordered width |
| Fabric & Tube Width * | 1-5/16" less than ordered width |

Fabric deduction can be up to 1-5/8" on large shades that use the SL20 or SL30 Clutch

| OUTSIDE MOUNT | |
|---|---|
| Shade Width | 1/4" **greater** than ordered width |
| Fabric & Tube Width * | 3/4" less than ordered width |

Fabric deduction can be up to 1-5/8" on large shades that use the SL20 or SL30 Clutch

| OUTSIDE MOUNT - With Fabric Valance | |
|---|---|
| Valance Width | 1-1/2" **greater** than ordered width |
| Fabric & Tube Width * | 7/8" less than ordered width |

| OUTSIDE MOUNT - With Deluxe Valance | |
|---|---|
| Valance Width (no returns) | 1-1/4" **greater** than ordered width |
| Valance Width (with returns) | 2-5/8" **greater** than ordered width |
| Fabric & Tube Width * | 3/4" less than ordered width |

| OUTSIDE MOUNT - With Small Cassette | |
|---|---|
| Cassette Width | 1/4" **greater** than ordered width |
| Fabric & Tube Width * | 15/16" less than ordered width |

| OUTSIDE MOUNT - With Medium Cassette | |
|---|---|
| Cassette Width | 1/4" **greater** than ordered width |
| Fabric & Tube Width * | 1" less than ordered width |

| OUTSIDE MOUNT - With Large Cassette | |
|---|---|
| Cassette Width | 1/4" **greater** than ordered width |
| Fabric & Tube Width * | 1" less than ordered width |

| OUTSIDE MOUNT - With 3" and 4" Fascia | |
|---|---|
| Fascia Width | 1/4" **greater** than ordered width |
| Fabric & Tube Width * | 3/4" less than ordered width |

Fabric deduction can be up to 1-5/8" on large shades that use the SL20 or SL30 Clutch

| OUTSIDE MOUNT - With 4" Pocket | |
|---|---|
| Pocket Width | 1/4" **greater** than ordered width |
| Fabric & Tube Width * | 15/16" less than ordered width |

Fabric deduction can be up to 1-5/8" on large shades that use the SL20 or SL30 Clutch

* Add +1/4 to Fabric Width for the Bottomrail Width including end caps

| EXACT END TO END MOUNT | |
|---|---|
| Shade Width | ordered width |
| Fabric & Tube Width * | 1" less than ordered width |

Fabric deduction can be up to 1-7/8" on large shades that use the SL20 or SL30 Clutch

| EXACT END TO END MOUNT - With Fabric Valance | |
|---|---|
| Valance Width | Ordered width |
| Fabric & Tube Width * | 1" less than ordered width |

Note: This mount type just apply to Valance of 3/4"

| EXACT END TO END MOUNT - With Deluxe Valance | |
|---|---|
| Valance Width (no returns) | Ordered width |
| Valance Width (with returns) | N/A |
| Fabric & Tube Width * | 1" less than ordered width |

| EXACT END TO END MOUNT - With Small Cassette | |
|---|---|
| Cassette Width | Ordered width |
| Fabric & Tube Width * | 1- 3/16" less than ordered width |

| EXACT END TO END MOUNT - With Medium Cassette | |
|---|---|
| Cassette Width | Ordered width |
| Fabric & Tube Width * | 1-1/4" less than ordered width |

| EXACT END TO END MOUNT - With Large Cassette | |
|---|---|
| Cassette Width | Ordered width |
| Fabric & Tube Width * | 1-1/4" less than ordered width |

| EXACT END TO END MOUNT - With 3" and 4" Fascia | |
|---|---|
| Fascia Width | Ordered width |
| Fabric & Tube Width * | 1" less than ordered width |

Fabric deduction can be up to 1-7/8" on large shades that use the SL20 or SL30 Clutch

| EXACT END TO END MOUNT - With 4" Pocket | |
|---|---|
| Pocket Width | ordered width |
| Fabric & Tube Width * | 1-3/16" less than ordered width |

Fabric deduction can be up to 1-7/8" on large shades that use the SL20 or SL30 Clutch

* Add +1/4 to Fabric Width for the Bottomrail Width including end caps

## R SERIES CLUTCH ROLLER SHADES

**For all options below, Shade Height = Ordered Height**

| INSIDE MOUNT | |
|---|---|
| Shade Width | 1/8" less than ordered width |
| Fabric & Tube Width * | 1-1/4" less than ordered width |

Fabric deduction can be up to 1-5/8" on large shades

| INSIDE MOUNT - With Fabric Valance | |
|---|---|
| Valance Width | 1/8" less than ordered width |
| Fabric & Tube Width * | 1-1/4" less than ordered width |

| INSIDE MOUNT - With Deluxe Valance | |
|---|---|
| Valance Width (no returns) | 1/8" less than ordered width |
| Valance Width (with returns) | 1 1/8" **greater** than ordered width |
| Fabric & Tube Width * | 1-1/4" less than ordered width |

| INSIDE MOUNT - With Small Cassette | |
|---|---|
| Cassette Width | 1/8" less than ordered width |
| Fabric & Tube Width * | 1-1/16" less than ordered width |

| INSIDE MOUNT - With Medium Cassette | |
|---|---|
| Cassette Width | 1/8" less than ordered width |
| Fabric & Tube Width * | 1-1/8" less than ordered width |

| INSIDE MOUNT - With Large Cassette | |
|---|---|
| Cassette Width | 1/8" less than ordered width |
| Fabric & Tube Width * | 1-1/8" less than ordered width |

| INSIDE MOUNT - With 3" & 4" Fascia | |
|---|---|
| Fascia Width | 1/8" less than ordered width |
| Fabric & Tube Width * | 1-1/4" less than ordered width |

Fabric deduction can be up to 1-5/8" on large shades

| INSIDE MOUNT - With 4" Pocket | |
|---|---|
| Pocket Width | 1/8" less than ordered width |
| Fabric & Tube Width * | 1-13/16" less than ordered width |

Fabric deduction can be up to 1-13/16" on large shades

| OUTSIDE MOUNT | |
|---|---|
| Shade Width | 1/4" **greater** than ordered width |
| Fabric & Tube Width * | 7/8" less than ordered width |

Fabric deduction can be up to 1-1/4" on large shades

| OUTSIDE MOUNT - With Fabric Valance | |
|---|---|
| Valance Width | 1-1/2" **greater** than ordered width |
| Fabric & Tube Width * | 7/8" less than ordered width |

| OUTSIDE MOUNT - With Deluxe Valance | |
|---|---|
| Valance Width (no returns) | 1-1/4" **greater** than ordered width |
| Valance Width (with returns) | 2-5/8" **greater** than ordered width |
| Fabric & Tube Width * | 7/8" less than ordered width |

| OUTSIDE MOUNT - With Small Cassette | |
|---|---|
| Cassette Width | 1/4" **greater** than ordered width |
| Fabric & Tube Width * | 11/16" less than ordered width |

| OUTSIDE MOUNT - With Medium Cassette | |
|---|---|
| Cassette Width | 1/4" **greater** than ordered width |
| Fabric & Tube Width * | 3/4" less than ordered width |

| OUTSIDE MOUNT - With Large Cassette | |
|---|---|
| Cassette Width | 1/4" **greater** than ordered width |
| Fabric & Tube Width * | 3/4" less than ordered width |

| OUTSIDE MOUNT - With 3" & 4" Fascia | |
|---|---|
| Fascia Width | 1/4" **greater** than ordered width |
| Fabric & Tube Width * | 7/8" less than ordered width |

Fabric deduction can be up to 1-1/4" on large shades

| OUTSIDE MOUNT - With 4" Pocket | |
|---|---|
| Pocket Width | 1/4" **greater** than ordered width |
| Fabric & Tube Width * | 1-7/16" less than ordered width |

* Add +1/4 to Fabric Width for the Bottomrail Width including end caps

| EXACT END TO END MOUNT | |
|---|---|
| Shade Width | ordered width |
| Fabric & Tube Width * | 1-1/8" less than ordered width |

Fabric deduction can be up to 1-1/4" on large shades

| EXACT END TO END MOUNT - With Fabric Valance | |
|---|---|
| Valance Width | Ordered width |
| Fabric & Tube Width * | 1-1/8" less than ordered width |

Note: This mount type just apply to Valance of 3/4"

| EXACT END TO END MOUNT - With Deluxe Valance | |
|---|---|
| Valance Width (no returns) | Ordered width |
| Valance Width (with returns) | N/A |
| Fabric & Tube Width * | 1-1/8" less than ordered width |

| EXACT END TO END MOUNT - With Small Cassette | |
|---|---|
| Cassette Width | Ordered width |
| Fabric & Tube Width * | 15/16" less than ordered width |

| EXACT END TO END MOUNT - With Medium Cassette | |
|---|---|
| Cassette Width | Ordered width |
| Fabric & Tube Width * | 1" less than ordered width |

| EXACT END TO END MOUNT - With Large Cassette | |
|---|---|
| Cassette Width | Ordered width |
| Fabric & Tube Width * | 1" less than ordered width |

| EXACT END TO END MOUNT - With 3" & 4" Fascia | |
|---|---|
| Fascia Width | Ordered width |
| Fabric & Tube Width * | 1-1/8" less than ordered width |

Fabric deduction can be up to 1-1/2" on large shades

| EXACT END TO END MOUNT - With 4" Pocket | |
|---|---|
| Pocket Width | Ordered width |
| Fabric & Tube Width * | 1-11/16" less than ordered width |

* Add +1/4 to Fabric Width for the Bottomrail Width including end caps

# FINISHED DIMENSIONS

**Adjustments are taken from ordered dimensions. Width and height may vary ± 1/8"**

## TOUCHLIFT CORDLESS ROLLER SHADES

**For all options below, Shade Height = Ordered Height**

| INSIDE MOUNT | |
|---|---|
| Shade Width | 1/8" less than ordered width |
| Fabric Width * | 3/4" less than ordered width |
| Tube Width | 1-5/16" less than ordered width |

| INSIDE MOUNT - With Fabric Valance | |
|---|---|
| Valance Width | 1/8" less than ordered width |
| Fabric Width * | 3/4" less than ordered width |
| Tube Width | 1-5/16" less than ordered width |

| INSIDE MOUNT - With Deluxe Valance | |
|---|---|
| Valance Width (no returns) | 1/8" less than ordered width |
| Valance Width (with returns) | 1 1/8" **greater** than ordered width |
| Fabric Width * | 3/4" less than ordered width |
| Tube Width | 1-5/16" less than ordered width |

| INSIDE MOUNT - With Medium Cassette | |
|---|---|
| Cassette Width | 1/8" less than ordered width |
| Fabric Width * | 1-1/16" less than ordered width |
| Tube Width | 1-5/8" less than ordered width |

| INSIDE MOUNT - With Large Cassette | |
|---|---|
| Cassette Width | 1/8" less than ordered width |
| Fabric Width * | 1-1/16" less than ordered width |
| Tube Width | 1-5/8" less than ordered width |

| OUTSIDE MOUNT | |
|---|---|
| Shade Width | Ordered width |
| Fabric Width * | 5/8" less than ordered width |
| Tube Width | 1-3/16" less than ordered width |

| OUTSIDE MOUNT - With Fabric Valance | |
|---|---|
| Valance Width | 1 -1 / 2" **greater** than ordered width |
| Fabric Width * | 5/8" less than ordered width |
| Tube Width | 1-3/16" less than ordered width |

| OUTSIDE MOUNT - With Deluxe Valance | |
|---|---|
| Valance Width (no returns) | 1" **greater** than ordered widht |
| Valance Width (with returns) | 2 3/8 **greater** than ordered width |
| Fabric Width * | 5/8" less than ordered width |
| Tube Width | 1-3/16" less than ordered width |

| OUTSIDE MOUNT - With Medium Cassette | |
|---|---|
| Cassette Width | Ordered width |
| Fabric Width * | 15/16" less than ordered width |
| Tube Width | 1-1/2" less than ordered width |

| OUTSIDE MOUNT - With Large Cassette | |
|---|---|
| Cassette Width | Ordered width |
| Fabric Width * | 15/16" less than ordered width |
| Tube Width | 1-1/2" less than ordered width |

* Add +1/4 to Fabric Width for the Bottomrail Width including end caps

| EXACT END TO END MOUNT | |
|---|---|
| Shade Width | Ordered width |
| Fabric Width * | 5/8" less than ordered width |
| Tube Width | 1-3/16" less than ordered width |

| EXACT END TO END - With Fabric Valance | |
|---|---|
| Valance Width | Ordered width |
| Fabric Width * | 5/8" less than ordered width |
| Tube Width | 1-3/16" less than ordered width |

Note: This mount type just apply to Valance of 3/4"

| EXACT END TO END - With Deluxe Valance | |
|---|---|
| Valance Width (no returns) | Ordered width |
| Valance Width (with returns) | N/A |
| Fabric Width * | 5/8" less than ordered width |
| Tube Width | 1-3/16" less than ordered width |

| EXACT END TO END - With Medium Cassette | |
|---|---|
| Cassette Width | Ordered width |
| Fabric Width * | 15/16" less than ordered width |
| Tube Width | 1-1/2" less than ordered width |

| EXACT END TO END - With Large Cassette | |
|---|---|
| Cassette Width | Ordered width |
| Fabric Width * | 15/16" less than ordered width |
| Tube Width | 1-1/2" less than ordered width |

* Add +1/4 to Fabric Width for the Bottomrail Width including end caps

# FINISHED DIMENSIONS

**Adjustments are taken from ordered dimensions. Width and height may vary ± 1/8"**

## PowerWand™ ROLLER SHADES

**Rechargeable**

**For all options below, Shade Height = Ordered Height**

| INSIDE MOUNT | |
|---|---|
| Shade Width | 1/8" less than ordered width |
| Fabric & Tube Width * | 1-1/4" less than ordered width |

| INSIDE MOUNT - With Fabric Valance | |
|---|---|
| Valance Width | 1/8" less than ordered width |
| Fabric & Tube Width * | 1-3/8" less than ordered width |

| INSIDE MOUNT - With Deluxe Valance | |
|---|---|
| Valance Width (no returns) | 1/8" less than ordered width |
| Valance Width (with returns) | 1 1/8" **greater** than ordered width |
| Fabric & Tube Width * | 1-1/4" less than ordered width |

| INSIDE MOUNT - With Medium Cassette | |
|---|---|
| Cassette Width | 1/8" less than ordered width |
| Fabric & Tube Width * | 1-1/2" less than ordered width |

| INSIDE MOUNT - With Large Cassette | |
|---|---|
| Cassette Width | 1/8" less than ordered width |
| Fabric & Tube Width * | 1-1/2" less than ordered width |

| OUTSIDE MOUNT | |
|---|---|
| Shade Width | 1/4" **greater** than ordered width |
| Fabric & Tube Width * | 1" less than ordered width |

| OUTSIDE MOUNT - With Fabric Valance | |
|---|---|
| Valance Width | 1 -3/4" **greater** than ordered width |
| Fabric & Tube Width * | 1" less than ordered width |

| OUTSIDE MOUNT - With Deluxe Valance | |
|---|---|
| Valance Width (no returns) | 1 -1/4 **greater** than ordered width |
| Valance Width (with returns) | 2 -5/8 **greater** than ordered width |
| Fabric & Tube Width * | 7/8" less than ordered width |

| OUTSIDE MOUNT - With Medium Cassette | |
|---|---|
| Cassette Width | 1/4" **greater** than ordered width |
| Fabric & Tube Width * | 1-1/8" less than ordered width |

| OUTSIDE MOUNT - With Large Cassette | |
|---|---|
| Cassette Width | 1/4" **greater** than ordered width |
| Fabric & Tube Width * | 1-1/8" less than ordered width |

| EXACT END TO END MOUNT | |
|---|---|
| Shade Width | Ordered width |
| Fabric & Tube Width * | 1-1/8" less than ordered width |

| EXACT END TO END MOUNT - With Fabric Valance | |
|---|---|
| Valance Width | Ordered width |
| Fabric & Tube Width * | 1-1/4" less than ordered width |

Note: This mount type just apply to Valance of 3/4"

| EXACT END TO END MOUNT - With Deluxe Valance | |
|---|---|
| Valance Width (no returns) | Ordered width |
| Valance Width (with returns) | N/A |
| Fabric & Tube Width * | 1-1/8" less than ordered width |

| EXACT END TO END MOUNT - With Medium Cassette | |
|---|---|
| Cassette Width | ordered width |
| Fabric & Tube Width * | 1-3/8" less than ordered width |

| EXACT END TO END MOUNT - With Large Cassette | |
|---|---|
| Cassette Width | Ordered width |
| Fabric & Tube Width * | 1-3/8" less than ordered width |

* Add +1/4 to Fabric Width for the Bottomrail Width including end caps

## SIMPLICITY MOTOR ROLLER SHADES

**1.1 Nm Tubular Rechargeable Motor**

**For all options below, Shade Height = Ordered Height**

| INSIDE MOUNT | |
|---|---|
| Shade Width | 1/8" less than ordered width |
| Fabric & Tube Width * | 1-1/4" less than ordered width |

| INSIDE MOUNT - With Fabric Valance | |
|---|---|
| Valance Width | 1/8" less than ordered width |
| Fabric & Tube Width * | 1-3/8" less than ordered width |

| INSIDE MOUNT - With Deluxe Valance | |
|---|---|
| Valance Width (no returns) | 1/8" less than ordered width |
| Valance Width (with returns) | 1 1/8" **greater** than ordered width |
| Fabric & Tube Width * | 1-1/4" less than ordered width |

| INSIDE MOUNT - With Medium Cassette | |
|---|---|
| Cassette Width | 1/8" less than ordered width |
| Fabric & Tube Width * | 1-1/2" less than ordered width |

| INSIDE MOUNT - With Large Cassette | |
|---|---|
| Cassette Width | 1/8" less than ordered width |
| Fabric & Tube Width * | 1-1/2" less than ordered width |

| OUTSIDE MOUNT | |
|---|---|
| Shade Width | 1/4" **greater** than ordered width |
| Fabric & Tube Width * | 1" less than ordered width |

| OUTSIDE MOUNT - With Fabric Valance | |
|---|---|
| Valance Width | 1 -3/4" **greater** than ordered width |
| Fabric & Tube Width * | 1" less than ordered width |

| OUTSIDE MOUNT - With Deluxe Valance | |
|---|---|
| Valance Width (no returns) | 1 -1/4 **greater** than ordered width |
| Valance Width (with returns) | 2 -5/8 **greater** than ordered width |
| Fabric & Tube Width * | 7/8" less than ordered width |

| OUTSIDE MOUNT - With Medium Cassette | |
|---|---|
| Cassette Width | 1/4" **greater** than ordered width |
| Fabric & Tube Width * | 1-1/8" less than ordered width |

| OUTSIDE MOUNT - With Large Cassette | |
|---|---|
| Cassette Width | 1/4" **greater** than ordered width |
| Fabric & Tube Width * | 1-1/8" less than ordered width |

| EXACT END TO END MOUNT | |
|---|---|
| Shade Width | Ordered width |
| Fabric & Tube Width * | 1-1/8" less than ordered width |

| EXACT END TO END MOUNT - With Fabric Valance | |
|---|---|
| Valance Width | Ordered width |
| Fabric & Tube Width * | 1-1/4" less than ordered width |

Note: This mount type just apply to Valance of 3/4"

| EXACT END TO END MOUNT - With Deluxe Valance | |
|---|---|
| Valance Width (no returns) | Ordered width |
| Valance Width (with returns) | N/A |
| Fabric & Tube Width * | 1-1/8" less than ordered width |

| EXACT END TO END MOUNT - With Medium Cassette | |
|---|---|
| Cassette Width | Ordered width |
| Fabric & Tube Width * | 1-3/8" less than ordered width |

| EXACT END TO END MOUNT - With Large Cassette | |
|---|---|
| Cassette Width | Ordered width |
| Fabric & Tube Width * | 1-3/8" less than ordered width |

* Add +1/4 to Fabric Width for the Bottomrail Width including end caps

# FINISHED DIMENSIONS

**Adjustments are taken from ordered dimensions. Width and height may vary ± 1/8"**

## REMOTELIFT & 24V HARDWIRED MOTORIZED ROLLER SHADES

**RemoteLift (Wirefree): R28 RTS & Sonesse 30 Ultra RTS / Hardwired Sonesse 30 RTS**

**For all options below, Shade Height = Ordered Height**

| INSIDE MOUNT | |
|---|---|
| Shade Width | 1/8" less than ordered width |
| Fabric & Tube Width * | 1-1/4" less than ordered width |

| INSIDE MOUNT - With Fabric Valance | |
|---|---|
| Valance Width | 1/8" less than ordered width |
| Fabric & Tube Width * | 1-1/4" less than ordered width |

| INSIDE MOUNT - With Deluxe Valance | |
|---|---|
| Valance Width (no returns) | 1/8" less than ordered width |
| Valance Width (with returns) | 1 1/8 **greater** than ordered width |
| Fabric & Tube Width * | 1-1/4" less than ordered width |

| INSIDE MOUNT - With Medium Cassette | |
|---|---|
| Cassette Width | 1/8" less than ordered width |
| Fabric & Tube Width * | 1-1/2" less than ordered width |

| INSIDE MOUNT - With Large Cassette | |
|---|---|
| Cassette Width | 1/8" less than ordered width |
| Fabric & Tube Width * | 1-1/2" less than ordered width |

| INSIDE MOUNT - With 3" and 4" Fascia | |
|---|---|
| Fascia Width | 1/8" less than ordered width |
| Fabric & Tube Width * | 1-1/4" less than ordered width |

| INSIDE MOUNT - With 4" Pocket | |
|---|---|
| Pocket Width | 1/8" less than ordered width |
| Fabric & Tube Width * | 1-7/16" less than ordered width |

| OUTSIDE MOUNT | |
|---|---|
| Shade Width | 1/4" **greater** than ordered width |
| Fabric & Tube Width * | 1" less than ordered width |

| OUTSIDE MOUNT - With Fabric Valance | |
|---|---|
| Valance Width | 1 - 1 / 2" **greater** than ordered width |
| Fabric & Tube Width * | 7/8 less than ordered width |

| OUTSIDE MOUNT - With Deluxe Valance | |
|---|---|
| Valance Width (no returns) | 1 1/4 **greater** than ordered width |
| Valance Width (with returns) | 2 5/8 **greater** than ordered width |
| Fabric & Tube Width * | 7/8 less than ordered width |

| OUTSIDE MOUNT - With Medium Cassette | |
|---|---|
| Cassette Width | 1/4" **greater** than ordered width |
| Fabric & Tube Width * | 1-1/8" less than ordered width |

| OUTSIDE MOUNT - With Large Cassette | |
|---|---|
| Cassette Width | 1/4" **greater** than ordered width |
| Fabric & Tube Width * | 1-1/8" less than ordered width |

| OUTSIDE MOUNT - With 3" and 4" Fascia | |
|---|---|
| Fascia Width | 1/4" **greater** than ordered width |
| Fabric & Tube Width * | 7/8" less than ordered width |

| OUTSIDE MOUNT - With 4" Pocket | |
|---|---|
| Pocket Width | 1/4" **greater** than ordered width |
| Fabric & Tube Width * | 1-1/16" less than ordered width |

* Add +1/4 to Fabric Width for the Bottomrail Width including end caps

| EXACT END TO END MOUNT | |
|---|---|
| Shade Width | Ordered width |
| Fabric & Tube Width * | 1-1/8" less than ordered width |

| EXACT END TO END MOUNT - With Fabric Valance | |
|---|---|
| Valance Width | Ordered width |
| Fabric & Tube Width * | 1 1/8 less than ordered width |

Note: This mount type just apply for Valance of 3/4"

| EXACT END TO END MOUNT - With Deluxe Valance | |
|---|---|
| Valance Width (no returns) | Ordered width |
| Valance Width (with returns) | N/A |
| Fabric & Tube Width * | 1 1/8 less than ordered width |

| EXACT END TO END MOUNT - With Medium Cassette | |
|---|---|
| Cassette Width | Ordered width |
| Fabric & Tube Width * | 1-3/8" less than ordered width |

| EXACT END TO END MOUNT - With Large Cassette | |
|---|---|
| Cassette Width | Ordered width |
| Fabric & Tube Width * | 1-3/8" less than ordered width |

| EXACT END TO END MOUNT - With 3" and 4" Fascia | |
|---|---|
| Fascia Width | Ordered width |
| Fabric & Tube Width * | 1-1/8" less than ordered width |

| EXACT END TO END MOUNT - With 4" Pocket | |
|---|---|
| Pocket Width | Ordered width |
| Fabric & Tube Width * | 1-5/16" less than ordered width |

* Add +1/4 to Fabric Width for the Bottomrail Width including end caps

## HARDWIRED MOTORIZED ROLLER SHADES

**ST50 I ST50R (Ultra Quiet)**

**For all options below, Shade Height = Ordered Height**

| INSIDE MOUNT | |
|---|---|
| Shade Width | 1/8" less than ordered width |
| Fabric & Tube Width * | 2-3/8" less than ordered width |

Fabric deduction can be up to 2-5/8" on large shades

| INSIDE MOUNT - With Fabric Valance | |
|---|---|
| Valance Width | N/A |
| Fabric & Tube Width * | N/A |

| INSIDE MOUNT - With Deluxe Valance | |
|---|---|
| Valance Width (no returns) | N/A |
| Valance Width (with returns) | N/A |
| Fabric & Tube Width * | N/A |

| INSIDE MOUNT - With 4" Fascia (R-Series) | |
|---|---|
| Fascia Width | 1/8" less than ordered width |
| Fabric & Tube Width * | 2-3/8" less than ordered width |

Fabric deduction can be up to 2-5/8" on large shades

| INSIDE MOUNT - With 4" Pocket | |
|---|---|
| Pocket Width | 1/8" less than ordered width |
| Fabric & Tube Width * | 2-9/16" less than ordered width |

Fabric deduction can be up to 2-13/16" on large shades

| OUTSIDE MOUNT | |
|---|---|
| Shade Width | 1/4" greater than ordered width |
| Fabric & Tube Width * | 2" less than ordered width |

Fabric deduction can be up to 2-1/4" on large shades

| OUTSIDE MOUNT - With Fabric Valance | |
|---|---|
| Valance Width | N/A |
| Fabric & Tube Width * | N/A |

| OUTSIDE MOUNT - With Deluxe Valance | |
|---|---|
| Valance Width (no returns) | N/A |
| Valance Width (with returns) | N/A |
| Fabric & Tube Width * | N/A |

| OUTSIDE MOUNT - With 4" Fascia (R-Series) | |
|---|---|
| Fascia Width | 1/4" **greater** than ordered width |
| Fabric & Tube Width * | 2" less than ordered width |

Fabric deduction can be up to 2-1/4" on large shades

| OUTSIDE MOUNT - With 4" Pocket | |
|---|---|
| Pocket Width | 1/4" **greater** than ordered width |
| Fabric & Tube Width * | 2-3/16" less than ordered width |

Fabric deduction can be up to 2-7/16" on large shades

* Add +1/4 to Fabric Width for the Bottomrail Width including end caps

| EXACT END TO END MOUNT | |
|---|---|
| Shade Width | Ordered width |
| Fabric & Tube Width * | 2-1/4" less than ordered width |

Fabric deduction can be up to 2-1/2" on large shades

| EXACT END TO END MOUNT - With Fabric Valance | |
|---|---|
| Valance Width | N/A |
| Fabric & Tube Width * | N/A |

| EXACT END TO END MOUNT - With Deluxe Valance | |
|---|---|
| Valance Width (no returns) | N/A |
| Valance Width (with returns) | N/A |
| Fabric & Tube Width * | N/A |

| EXACT END TO END MOUNT - With 4" Fascia (R-Series) | |
|---|---|
| Fascia Width | Ordered width |
| Fabric & Tube Width * | 2-1/4" less than ordered width |

Fabric deduction can be up to 2-1/2" on large shades

| EXACT END TO END MOUNT - With 4" Pocket | |
|---|---|
| Pocket Width | Ordered width |
| Fabric & Tube Width * | 2-7/16" less than ordered width |

Fabric deduction can be up to 2-11/16" on large shades

* Add +1/4 to Fabric Width for the Bottomrail Width including end caps

# FINISHED DIMENSIONS

**Adjustments are taken from ordered dimensions. Width and height may vary ± 1/8"**

## EXTERIOR ROLLER SHADES

**For all options below, Shade Height = Ordered Height**

| INSIDE MOUNT | |
|---|---|
| Shade Width | 1/8" less than ordered width |
| Fabric Width * | 1-1/8" less than ordered width |
| Tube Width | 1-1/8" less than ordered width |

| INSIDE MOUNT - With Large Cassette | |
|---|---|
| Cassette Width | 1/8" less than ordered width |
| Fabric Width * | 1-3/8" less than ordered width |
| Tube Width | 1-3/8" less than ordered width |

| OUTSIDE MOUNT | |
|---|---|
| Shade Width | 1/4" greater than ordered width |
| Fabric Width * | 7/8" less than ordered width |
| Tube Width | 7/8" less than ordered width |

| OUTSIDE MOUNT - With Large Cassette | |
|---|---|
| Cassette Width | 1/4" greater than ordered width |
| Fabric Width * | 1" less than ordered width |
| Tube Width | 1" less than ordered width |

| EXACT END TO END MOUNT | |
|---|---|
| Shade Width | ordered width |
| Fabric Width * | 1-1/8” less than ordered width |
| Tube Width | 1-1/8" less than ordered width |

| EXACT END TO END MOUNT - With Large Cassette | |
|---|---|
| Cassette Width | ordered width |
| Fabric Width * | 1 3/8” less than ordered width |
| Tube Width | 1 3/8” less than ordered width |

* Add +1/4 to Fabric Width for the Bottomrail Width including end caps

## CABLE GUIDED EXTERIOR ROLLER SHADES

**For all options below, Shade Height = Ordered Height**

| INSIDE MOUNT | |
|---|---|
| Shade Width | 1/8" less than ordered width |
| Fabric Width * | 1-3/8" less than ordered width |
| Tube Width | 1-3/8" less than ordered width |

| INSIDE MOUNT - With Large Cassette | |
|---|---|
| Cassette Width | 1/8" less than ordered width |
| Fabric Width * | 1-5/8" less than ordered width |
| Tube Width | 1-5/8" less than ordered width |

| OUTSIDE MOUNT | |
|---|---|
| Shade Width | 1/4" greater than ordered width |
| Fabric Width * | 1" less than ordered width |
| Tube Width | 1" less than ordered width |

| OUTSIDE MOUNT - With Large Cassette | |
|---|---|
| Cassette Width | 1/4" greater than ordered width |
| Fabric Width * | 1-1/4" less than ordered width |
| Tube Width | 1-1/4" less than ordered width |

| EXACT END TO END MOUNT | |
|---|---|
| Shade Width | ordered width |
| Fabric Width * | 1-1/4” less than ordered width |
| Tube Width | 1-1/4” less than ordered width |

| EXACT END TO END - With Large Cassette | |
|---|---|
| Cassette Width | ordered width |
| Fabric Width * | 1-1/2” less than ordered width |
| Tube Width | 1-1/2” less than ordered width |

* Add +1/4 to Fabric Width for the Bottomrail Width including end caps

# HARDWARE COLOR COORDINATION CHART

| | | | Clutch Component Set | | | | TouchLift Mounting Bar Component Set | |
|---|---|---|---|---|---|---|---|---|
| Material Name | Color Name | Color # | Beaded Chain & Tensioner | Clutch & End Plugs Universal Brackets | Fabric Wrapped Bottomrail | Bracket and/or Bracket Cover | Cordless Mounting Bar & Bracket | Fabric Wrapped Bottomrail |
| 1% E Screen | Charcoal/Charcoal | R8009 | BLACK | BLACK | BLACK | BLACK | BLACK | BLACK |
| 1% E Screen | Charcoal/Cocoa | R8007 | BLACK | BLACK | BLACK | BLACK | BLACK | BLACK |
| 1% E Screen | Charcoal/Grey | R8008 | BLACK | BLACK | BLACK | BLACK | BLACK | BLACK |
| 1% E Screen | White | R8004 | WHITE | WHITE | WHITE | WHITE | WHITE | WHITE |
| 1% E Screen | White/Linen | R8005 | WHITE | WHITE | WHITE | WHITE | WHITE | WHITE |
| 1% E Screen | White/Pearl | R8003 | WHITE | WHITE | WHITE | WHITE | WHITE | WHITE |
| 1% Sheerweave 2500 | Beige | R01 Q20 | WHITE | WHITE | WHITE | WHITE | WHITE | WHITE |
| 1% Sheerweave 2500 | Beige/Pearl Gray | R01 Q21 | WHITE | WHITE | WHITE | WHITE | WHITE | WHITE |
| 1% Sheerweave 2500 | Charcoal | R0103 | BLACK | BLACK | BLACK | BLACK | BLACK | BLACK |
| 1% Sheerweave 2500 | Charcoal/Alpaca | R0109 | BLACK | BLACK | BLACK | BLACK | BLACK | BLACK |
| 1% Sheerweave 2500 | Charcoal/Chestnut | R0104 | BLACK | BLACK | BLACK | BLACK | BLACK | BLACK |
| 1% Sheerweave 2500 | Charcoal/Gray | R01 V22 | BLACK | BLACK | BLACK | BLACK | BLACK | BLACK |
| 1% Sheerweave 2500 | Oyster | R0105 | WHITE | WHITE | WHITE | WHITE | WHITE | WHITE |
| 1% Sheerweave 2500 | Oyster/Beige | R0106 | WHITE | WHITE | WHITE | WHITE | WHITE | WHITE |
| 1% Sheerweave 2500 | Oyster/Pearl Gray | R0107 | WHITE | WHITE | WHITE | WHITE | WHITE | WHITE |
| 1% Sheerweave 2500 | Pearl Gray | R01 V20 | WHITE | WHITE | WHITE | WHITE | WHITE | WHITE |
| 1% Sheerweave 2701 | Charcoal | RS21 V21 | BLACK | BLACK | BLACK | BLACK | BLACK | BLACK |
| 1% Sheerweave 2701 | Charcoal/Brown | RS21 V66 | BLACK | BLACK | BLACK | BLACK | BLACK | BLACK |
| 1% Sheerweave 2701 | Charcoal/Gray | RS21 V22 | BLACK | BLACK | BLACK | BLACK | BLACK | BLACK |
| 1% Sheerweave 2701 | Charcoal/Slate | RS21 V64 | BLACK | BLACK | BLACK | BLACK | BLACK | BLACK |
| 1% Sheerweave 2701 | Charcoal/Taupe | RS21 V65 | BLACK | BLACK | BLACK | BLACK | BLACK | BLACK |
| 1% Sheerweave 2701 | Oyster | RS2101 | WHITE | WHITE | WHITE | WHITE | WHITE | WHITE |
| 1% Sheerweave 2701 | Oyster/Beige | RS2102 | WHITE | WHITE | WHITE | WHITE | WHITE | WHITE |
| 1% Sheerweave 2701 | Oyster/Charcoal | RS2106 | BLACK | BLACK | BLACK | BLACK | BLACK | BLACK |
| 1% Sheerweave 2701 | Oyster/Chestnut | RS2105 | BLACK | BLACK | BLACK | BLACK | BLACK | BLACK |
| 1% Sheerweave 2701 | Oyster/Pearl Gray | RS2103 | BLACK | BLACK | BLACK | BLACK | BLACK | BLACK |
| 1% Sheerweave 2701 | Oyster/Pewter | RS2104 | BLACK | BLACK | BLACK | BLACK | BLACK | BLACK |
| 1% Sheerweave 4901 | Birch | P4901 Q25 | WHITE | WHITE | WHITE | WHITE | WHITE | WHITE |
| 1% Sheerweave 4901 | Chalk | P4901 P06 | WHITE | WHITE | WHITE | WHITE | WHITE | WHITE |
| 1% Sheerweave 4901 | Chalk/Black | P4901 P25 | BLACK | BLACK | BLACK | BLACK | BLACK | BLACK |
| 1% Sheerweave 4901 | Chalk/Wheat | P4901 P26 | WHITE | WHITE | WHITE | WHITE | WHITE | WHITE |
| 1% Sheerweave 4901 | Cobblestone | P4901 Q26 | WHITE | WHITE | WHITE | WHITE | WHITE | WHITE |
| 1% Sheerweave 4901 | Ebony | P4901 V10 | BLACK | BLACK | BLACK | BLACK | BLACK | BLACK |
| 1% Sheerweave 4901 | Flaxen | P4901 Q22 | WHITE | WHITE | WHITE | WHITE | WHITE | WHITE |
| 1% Sheerweave 4901 | Kettal Grey | P4901 Q07 | WHITE | WHITE | WHITE | WHITE | WHITE | WHITE |
| 1% Sheerweave 4901 | Pewter/Chalk | P4901 V03 | WHITE | WHITE | WHITE | WHITE | WHITE | WHITE |
| 1% Sheerweave 4901 | Slate | P4901 V28 | BLACK | BLACK | BLACK | BLACK | BLACK | BLACK |
| 1% Sheerweave 4901 | Soft Grey | P4901 Q27 | WHITE | WHITE | WHITE | WHITE | WHITE | WHITE |
| 1% Sheerweave 4901 | Tobacco | P4901 Q16 | BLACK | BLACK | BLACK | BLACK | BLACK | BLACK |
| 1% Sheerweave 4901 | Whitesands | P4901 Q23 | WHITE | WHITE | WHITE | WHITE | WHITE | WHITE |
| 1% Sheerweave 5000 | Jute/Coffee | P5001 R88 | BLACK | BLACK | BLACK | BLACK | BLACK | BLACK |
| 1% Sheerweave 5000 | Jute/Flax | P5001 R86 | WHITE | WHITE | WHITE | WHITE | WHITE | WHITE |
| 1% Sheerweave 5000 | Jute/Latte | P5001 R87 | WHITE | WHITE | WHITE | WHITE | WHITE | WHITE |
| 1% Sheerweave 5000 | Jute/Parchment | P5001 R85 | WHITE | WHITE | WHITE | WHITE | WHITE | WHITE |
| 1% Toka | Bone | RS11002 | WHITE | WHITE | WHITE | WHITE | WHITE | WHITE |
| 1% Toka | Platinum | RS11003 | WHITE | WHITE | WHITE | WHITE | WHITE | WHITE |
| 1% Toka | White | RS11001 | WHITE | WHITE | WHITE | WHITE | WHITE | WHITE |
| 3% E Screen | Charcoal/Charcoal | R8102 | BLACK | BLACK | BLACK | BLACK | BLACK | BLACK |
| 3% E Screen | Charcoal/Cocoa | R8107 | BLACK | BLACK | BLACK | BLACK | BLACK | BLACK |
| 3% E Screen | Charcoal/Grey | R8108 | BLACK | BLACK | BLACK | BLACK | BLACK | BLACK |
| 3% E Screen | White/Linen | R8104 | WHITE | WHITE | WHITE | WHITE | WHITE | WHITE |
| 3% E Screen | White/Pearl | R8105 | WHITE | WHITE | WHITE | WHITE | WHITE | WHITE |
| 3% E Screen | White/White | R8106 | WHITE | WHITE | WHITE | WHITE | WHITE | WHITE |
| 3% M Screen | Charcoal/Apricot | R5803 | BLACK | BLACK | BLACK | BLACK | BLACK | BLACK |
| 3% M Screen | Charcoal/Charcoal | R5805 | BLACK | BLACK | BLACK | BLACK | BLACK | BLACK |
| 3% M Screen | Charcoal/Sable | R5808 | BLACK | BLACK | BLACK | BLACK | BLACK | BLACK |
| 3% M Screen | White Linen | R5807 | WHITE | WHITE | WHITE | WHITE | WHITE | WHITE |
| 3% M Screen | White/White | R5801 | WHITE | WHITE | WHITE | WHITE | WHITE | WHITE |
| 3% Sheerweave 2410 | Beige | R06 Q20 | WHITE | WHITE | WHITE | WHITE | WHITE | WHITE |
| 3% Sheerweave 2410 | Beige/Pearl Gray | R06 Q21 | WHITE | WHITE | WHITE | WHITE | WHITE | WHITE |
| 3% Sheerweave 2410 | Charcoal/Alpaca | R0609 | BLACK | BLACK | BLACK | BLACK | BLACK | BLACK |
| 3% Sheerweave 2410 | Charcoal/Chestnut | R0604 | BLACK | BLACK | BLACK | BLACK | BLACK | BLACK |
| 3% Sheerweave 2410 | Charcoal/Gray | R06 V22 | BLACK | BLACK | BLACK | BLACK | BLACK | BLACK |
| 3% Sheerweave 2410 | Oyster | R0605 | WHITE | WHITE | WHITE | WHITE | WHITE | WHITE |
| 3% Sheerweave 2410 | Oyster/Beige | R0606 | WHITE | WHITE | WHITE | WHITE | WHITE | WHITE |
| 3% Sheerweave 2410 | Oyster/Pearl Gray | R0607 | WHITE | WHITE | WHITE | WHITE | WHITE | WHITE |
| 3% Sheerweave 2410 | Pearl Gray | R06 V20 | BLACK | BLACK | BLACK | BLACK | BLACK | BLACK |

* **STRONGLY RECOMMEND** Heat Sealed Hem as the Bottomrail option for bigger shades and for Sheerweave 5000 collections to improve appearance of the shade, and minimizing waviness.

The default color for the clutches, end plugs, plastic beaded chains, tensioners, and bottomrail for all patterns is either black or white as indicated above. Vanilla and bronze plastic beaded chains and tensioners are also available as an option, and must be specified at time of order. White and vanilla chains and tensioners will be coordinated to white clutches, end plugs, and bottomrails. Bronze and black chains and tensioners will be coordinated to black clutches, end plugs, and bottomrails.

Antique brass, nickel, oil rubbed & stainless steel chains will not have similar color coordinated component set, to ensure color coordinate as desired, please review colors under each clutch components.

NOTE: There are no pre-set default colors for cassette valances, fascia, or optional Deluxe bottomrails. These colors must be specified when ordering. Default trims not selected for Phifer screen patterns.

# HARDWARE COLOR COORDINATION CHART

| | | | Clutch Component Set | | | | TouchLift Mounting Bar Component Set | |
|---|---|---|---|---|---|---|---|---|
| Material Name | Color Name | Color # | Beaded Chain & Tensioner | Clutch & End Plugs Universal Brackets | Fabric Wrapped Bottomrail | Bracket and/or Bracket Cover | Cordless Mounting Bar & Bracket | Fabric Wrapped Bottomrail |
| 3% Sheerweave 2410 | Charcoal | R0603 | BLACK | BLACK | BLACK | BLACK | BLACK | BLACK |
| 3% Sheerweave 2703 | Charcoal | P2703 V21 | BLACK | BLACK | BLACK | BLACK | BLACK | BLACK |
| 3% Sheerweave 2703 | Charcoal/Brown | P2703 V66 | BLACK | BLACK | BLACK | BLACK | BLACK | BLACK |
| 3% Sheerweave 2703 | Charcoal/Gray | P2703 V22 | BLACK | BLACK | BLACK | BLACK | BLACK | BLACK |
| 3% Sheerweave 2703 | Charcoal/Slate | P2703 V64 | BLACK | BLACK | BLACK | BLACK | BLACK | BLACK |
| 3% Sheerweave 2703 | Charcoal/Taupe | P2703 V65 | BLACK | BLACK | BLACK | BLACK | BLACK | BLACK |
| 3% Sheerweave 2703 | OYSTER | P2703 P12 | WHITE | WHITE | WHITE | WHITE | WHITE | WHITE |
| 3% Sheerweave 2703 | OYSTER/BEIGE | P2703 P13 | WHITE | WHITE | WHITE | WHITE | WHITE | WHITE |
| 3% Sheerweave 2703 | OYSTER/CHARCOAL | P2703 P28 | BLACK | BLACK | BLACK | BLACK | BLACK | BLACK |
| 3% Sheerweave 2703 | OYSTER/CHESTNUT | P2703 P92 | BLACK | BLACK | BLACK | BLACK | BLACK | BLACK |
| 3% Sheerweave 2703 | OYSTER/PEARL GRAY | P2703 P14 | WHITE | WHITE | WHITE | WHITE | WHITE | WHITE |
| 3% Sheerweave 2703 | OYSTER/PEWTER | P2703 P91 | WHITE | WHITE | WHITE | WHITE | WHITE | WHITE |
| 3% Sheerweave 4400 | Alabaster | RS2200 | WHITE | WHITE | WHITE | WHITE | WHITE | WHITE |
| 3% Sheerweave 4400 | Ash | RS2 U64 | BLACK | BLACK | BLACK | BLACK | BLACK | BLACK |
| 3% Sheerweave 4400 | Chalk | RS2202 | WHITE | WHITE | WHITE | WHITE | WHITE | WHITE |
| 3% Sheerweave 4400 | Ebony | RS2 U65 | BLACK | BLACK | BLACK | BLACK | BLACK | BLACK |
| 3% Sheerweave 4400 | Granite | RS2 U62 | WHITE | WHITE | WHITE | WHITE | WHITE | WHITE |
| 3% Sheerweave 4400 | Greystone | RS2201 | WHITE | WHITE | WHITE | WHITE | WHITE | WHITE |
| 3% Sheerweave 4400 | Pebblestone | RS2 U60 | WHITE | WHITE | WHITE | WHITE | WHITE | WHITE |
| 3% Sheerweave 4400 | Pewter | RS2203 | BLACK | BLACK | BLACK | BLACK | BLACK | BLACK |
| 3% Sheerweave 4400 | Tobacco | RS2 U66 | BLACK | BLACK | BLACK | BLACK | BLACK | BLACK |
| 3% Sheerweave 4600 | Cappuccino | P4600 V95 | BLACK | BLACK | N/A (Heat sealed only) | BLACK | BLACK | N/A (Heat sealed only) |
| 3% Sheerweave 4600 | Chalk | P4600 P06 | WHITE | WHITE | WHITE | WHITE | WHITE | WHITE |
| 3% Sheerweave 4600 | Dark Bronze | P4600 V96 | BLACK | BLACK | N/A (Heat sealed only) | BLACK | BLACK | N/A (Heat sealed only) |
| 3% Sheerweave 4600 | Ebony | P4600 V10 | BLACK | BLACK | N/A (Heat sealed only) | BLACK | BLACK | N/A (Heat sealed only) |
| 3% Sheerweave 4600 | Ecru | P4600 Q59 | WHITE | WHITE | WHITE | WHITE | WHITE | WHITE |
| 3% Sheerweave 4600 | Golden Sand | P4600 Q60 | WHITE | WHITE | N/A (Heat sealed only) | WHITE | WHITE | N/A (Heat sealed only) |
| 3% Sheerweave 4600 | Granite | P4600 P10 | WHITE | WHITE | N/A (Heat sealed only) | WHITE | WHITE | N/A (Heat sealed only) |
| 3% Sheerweave 4600 | Linen | P4600 U32 | WHITE | WHITE | N/A (Heat sealed only) | WHITE | WHITE | N/A (Heat sealed only) |
| 3% Sheerweave 4600 | Pewter | P4600 V07 | WHITE | WHITE | N/A (Heat sealed only) | WHITE | WHITE | N/A (Heat sealed only) |
| 3% Sheerweave 4600 | Sandstone | P4600 V44 | WHITE | WHITE | N/A (Heat sealed only) | WHITE | WHITE | N/A (Heat sealed only) |
| 3% Sheerweave 4903 | Birch | P4903 Q25 | WHITE | WHITE | WHITE | WHITE | WHITE | WHITE |
| 3% Sheerweave 4903 | Chalk | P4903 P06 | WHITE | WHITE | WHITE | WHITE | WHITE | WHITE |
| 3% Sheerweave 4903 | Chalk/Black | P4903 P25 | BLACK | BLACK | BLACK | BLACK | BLACK | BLACK |
| 3% Sheerweave 4903 | Chalk/Wheat | P4903 P26 | WHITE | WHITE | WHITE | WHITE | WHITE | WHITE |
| 3% Sheerweave 4903 | Cobblestone | P4903 Q26 | WHITE | WHITE | WHITE | WHITE | WHITE | WHITE |
| 3% Sheerweave 4903 | Ebony | P4903 V10 | BLACK | BLACK | BLACK | BLACK | BLACK | BLACK |
| 3% Sheerweave 4903 | Flaxen | P4903 Q22 | WHITE | WHITE | WHITE | WHITE | WHITE | WHITE |
| 3% Sheerweave 4903 | Kettal Grey | P4903 Q07 | WHITE | WHITE | WHITE | WHITE | WHITE | WHITE |
| 3% Sheerweave 4903 | Pewter/Chalk | P4903 V03 | WHITE | WHITE | WHITE | WHITE | WHITE | WHITE |
| 3% Sheerweave 4903 | Slate | P4903 V28 | BLACK | BLACK | BLACK | BLACK | BLACK | BLACK |
| 3% Sheerweave 4903 | Soft Grey | P4903 Q27 | WHITE | WHITE | WHITE | WHITE | WHITE | WHITE |
| 3% Sheerweave 4903 | Tobacco | P4903 Q16 | BLACK | BLACK | BLACK | BLACK | BLACK | BLACK |
| 3% Sheerweave 4903 | Whitesands | P4903 Q23 | WHITE | WHITE | WHITE | WHITE | WHITE | WHITE |
| 3% Sheerweave 5000 | Bark/Sienna | R0710 | BLACK | BLACK | BLACK | BLACK | BLACK | BLACK |
| 3% Sheerweave 5000 | Chenille/Honey | R0707 | WHITE | WHITE | WHITE | WHITE | WHITE | WHITE |
| 3% Sheerweave 5000 | Chenille/Marshmallow | R07 R89 | WHITE | WHITE | WHITE | WHITE | WHITE | WHITE |
| 3% Sheerweave 5000 | Chenille/Pearl | R07 R90 | WHITE | WHITE | WHITE | WHITE | WHITE | WHITE |
| 3% Sheerweave 5000 | Linen/Burlap | R07 U11 | WHITE | WHITE | WHITE | WHITE | WHITE | WHITE |
| 3% Sheerweave 5000 | Linen/Cinnamon | R0702 | BLACK | BLACK | BLACK | BLACK | BLACK | BLACK |
| 3% Sheerweave 5000 | Linen/Cranberry | R07 R11 | BLACK | BLACK | BLACK | BLACK | BLACK | BLACK |
| 3% Sheerweave 5000 | Linen/Cream | R0704 | WHITE | WHITE | WHITE | WHITE | WHITE | WHITE |
| 3% Sheerweave 5000 | Linen/Fig | R0705 | BLACK | BLACK | BLACK | BLACK | BLACK | BLACK |
| 3% Sheerweave 5000 | Linen/Topaz | R07 U10 | BLACK | BLACK | BLACK | BLACK | BLACK | BLACK |
| 3% Sheerweave 5000 | Wicker/Straw | R07 R93 | WHITE | WHITE | WHITE | WHITE | WHITE | WHITE |
| 3% T Screen | Charcoal/Charcoal | RS16005 | BLACK | BLACK | BLACK | BLACK | BLACK | BLACK |
| 3% T Screen | Charcoal/Grey | RS16006 | BLACK | BLACK | BLACK | BLACK | BLACK | BLACK |
| 3% T Screen | Sable/Charcoal | RS16003 | BLACK | BLACK | BLACK | BLACK | BLACK | BLACK |
| 3% T Screen | White/Pearl | RS16004 | WHITE | WHITE | WHITE | WHITE | WHITE | WHITE |
| 3% T Screen | White/Sable-Straw | RS16002 | WHITE | WHITE | WHITE | WHITE | WHITE | WHITE |
| 3% T Screen | White/White | RS16001 | WHITE | WHITE | WHITE | WHITE | WHITE | WHITE |
| 4% S Screen | Ginger | RS15006 | BLACK | BLACK | BLACK | BLACK | BLACK | BLACK |
| 4% S Screen | Granite | RS15004 | BLACK | BLACK | BLACK | BLACK | BLACK | BLACK |
| 4% S Screen | Papyrus | RS15003 | BLACK | BLACK | BLACK | BLACK | BLACK | BLACK |
| 4% S Screen | Porcelain | RS15001 | WHITE | WHITE | WHITE | WHITE | WHITE | WHITE |
| 4% S Screen | Sesame | RS15007 | BLACK | BLACK | BLACK | BLACK | BLACK | BLACK |

* **STRONGLY RECOMMEND** Heat Sealed Hem as the Bottomrail option for bigger shades and for Sheerweave 5000 collections to improve appearance of the shade, and minimizing waviness.

The default color for the clutches, end plugs, plastic beaded chains, tensioners, and bottomrail for all patterns is either black or white as indicated above. Vanilla and bronze plastic beaded chains and tensioners are also available as an option, and must be specified at time of order. White and vanilla chains and tensioners will be coordinated to white clutches, end plugs, and bottomrails. Bronze and black chains and tensioners will be coordinated to black clutches, end plugs, and bottomrails.

Antique brass, nickel, oil rubbed & stainless steel chains will not have similar color coordinated component set, to ensure color coordinate as desired, please review colors under each clutch components.

NOTE: There are no pre-set default colors for cassette valances, fascia, or optional Deluxe bottomrails. These colors must be specified when ordering. Default trims not selected for Phifer screen patterns.

# HARDWARE COLOR COORDINATION CHART

| | | | Clutch Component Set | | | | TouchLift Mounting Bar Component Set | |
|---|---|---|---|---|---|---|---|---|
| Material Name | Color Name | Color # | Beaded Chain & Tensioner | Clutch & End Plugs Universal Brackets | Fabric Wrapped Bottomrail | Bracket and/or Bracket Cover | Cordless Mounting Bar & Bracket | Fabric Wrapped Bottomrail |
| 4% Silver Screen | Beige | RS6501 | WHITE | WHITE | WHITE | WHITE | WHITE | WHITE |
| 4% Silver Screen | Black | RS6504 | BLACK | BLACK | BLACK | BLACK | BLACK | BLACK |
| 4% Silver Screen | Bronze | RS6503 | BLACK | BLACK | BLACK | BLACK | BLACK | BLACK |
| 4% Silver Screen | Light Grey | RS6500 | WHITE | WHITE | WHITE | WHITE | WHITE | WHITE |
| 4% Silver Screen | White | RS6502 | WHITE | WHITE | WHITE | WHITE | WHITE | WHITE |
| 5% E Screen | Charcoal/Charcoal | R5105 | BLACK | BLACK | BLACK | BLACK | BLACK | BLACK |
| 5% E Screen | Charcoal/Cocoa | R5104 | BLACK | BLACK | BLACK | BLACK | BLACK | BLACK |
| 5% E Screen | Charcoal/Grey | R5110 | BLACK | BLACK | BLACK | BLACK | BLACK | BLACK |
| 5% E Screen | Pure White | R5101 | WHITE | WHITE | WHITE | WHITE | WHITE | WHITE |
| 5% E Screen | White/Linen | R5108 | WHITE | WHITE | WHITE | WHITE | WHITE | WHITE |
| 5% E Screen | White/Pearl | R5109 | WHITE | WHITE | WHITE | WHITE | WHITE | WHITE |
| 5% M Screen Deco | Flagstone | R6107 | BLACK | BLACK | BLACK | BLACK | BLACK | BLACK |
| 5% M Screen Deco | Harvest Wheat | R6104 | BLACK | BLACK | BLACK | BLACK | BLACK | BLACK |
| 5% M Screen Deco | Hazelnut | R6105 | BLACK | BLACK | BLACK | BLACK | BLACK | BLACK |
| 5% M Screen Deco | Parchment | R6106 | WHITE | WHITE | WHITE | WHITE | WHITE | WHITE |
| 5% M Screen Deco | River Rock | R6102 | WHITE | WHITE | WHITE | WHITE | WHITE | WHITE |
| 5% M Screen Deco | Tumbleweed | R6103 | WHITE | WHITE | WHITE | WHITE | WHITE | WHITE |
| 5% Sheerweave 2000 | Bone | P2000 Q05 | WHITE | WHITE | WHITE | WHITE | WHITE | WHITE |
| 5% Sheerweave 2000 | Bone/Platinum | P2000 Q06 | WHITE | WHITE | WHITE | WHITE | WHITE | WHITE |
| 5% Sheerweave 2000 | Bronze | P2000 Q10 | BLACK | BLACK | BLACK | BLACK | BLACK | BLACK |
| 5% Sheerweave 2000 | Charcoal | P2000 V21 | BLACK | BLACK | BLACK | BLACK | BLACK | BLACK |
| 5% Sheerweave 2000 | Charcoal/Chestnut | P2000 V24 | BLACK | BLACK | BLACK | BLACK | BLACK | BLACK |
| 5% Sheerweave 2000 | Charcoal/Gray | P2000 V22 | BLACK | BLACK | BLACK | BLACK | BLACK | BLACK |
| 5% Sheerweave 2000 | Platinum | P2000 V04 | WHITE | WHITE | WHITE | WHITE | WHITE | WHITE |
| 5% Sheerweave 2000 | White | P2000 P02 | WHITE | WHITE | WHITE | WHITE | WHITE | WHITE |
| 5% Sheerweave 2000 | White/Bone | P2000 P04 | WHITE | WHITE | WHITE | WHITE | WHITE | WHITE |
| 5% Sheerweave 2000 | White/Platinum | P2000 P05 | WHITE | WHITE | WHITE | WHITE | WHITE | WHITE |
| 5% Sheerweave 2390 | Beige | RS1 Q20 | WHITE | WHITE | WHITE | WHITE | WHITE | WHITE |
| 5% Sheerweave 2390 | Beige/Pearl Gray | RS1 Q21 | WHITE | WHITE | WHITE | WHITE | WHITE | WHITE |
| 5% Sheerweave 2390 | Charcoal | RS1105 | BLACK | BLACK | BLACK | BLACK | BLACK | BLACK |
| 5% Sheerweave 2390 | Charcoal/Alpaca | RS1106 | BLACK | BLACK | BLACK | BLACK | BLACK | BLACK |
| 5% Sheerweave 2390 | Charcoal/Chestnut | RS1104 | BLACK | BLACK | BLACK | BLACK | BLACK | BLACK |
| 5% Sheerweave 2390 | Charcoal/Gray | RS1102 | BLACK | BLACK | BLACK | BLACK | BLACK | BLACK |
| 5% Sheerweave 2390 | Oyster | RS1100 | WHITE | WHITE | WHITE | WHITE | WHITE | WHITE |
| 5% Sheerweave 2390 | Oyster/Beige | RS1101 | WHITE | WHITE | WHITE | WHITE | WHITE | WHITE |
| 5% Sheerweave 2390 | Oyster/Pearl Gray | RS1103 | WHITE | WHITE | WHITE | WHITE | WHITE | WHITE |
| 5% Sheerweave 2390 | Pearl Gray | RS1 V20 | WHITE | WHITE | WHITE | WHITE | WHITE | WHITE |
| 5% Sheerweave 2705 | Charcoal | P2705 V21 | BLACK | BLACK | N/A (Heat sealed only) | BLACK | BLACK | N/A (Heat sealed only) |
| 5% Sheerweave 2705 | Charcoal/Brown | P2705 V66 | BLACK | BLACK | N/A (Heat sealed only) | BLACK | BLACK | N/A (Heat sealed only) |
| 5% Sheerweave 2705 | Charcoal/Gray | P2705 V22 | BLACK | BLACK | N/A (Heat sealed only) | BLACK | BLACK | N/A (Heat sealed only) |
| 5% Sheerweave 2705 | Charcoal/Slate | P2705 V64 | BLACK | BLACK | N/A (Heat sealed only) | BLACK | BLACK | N/A (Heat sealed only) |
| 5% Sheerweave 2705 | Charcoal/Taupe | P2705 V65 | BLACK | BLACK | N/A (Heat sealed only) | BLACK | BLACK | N/A (Heat sealed only) |
| 5% Sheerweave 2705 | Oyster | P2705 P12 | WHITE | WHITE | N/A (Heat sealed only) | WHITE | WHITE | N/A (Heat sealed only) |
| 5% Sheerweave 2705 | Oyster/Beige | P2705 P13 | WHITE | WHITE | N/A (Heat sealed only) | WHITE | WHITE | N/A (Heat sealed only) |
| 5% Sheerweave 2705 | Oyster/Charcoal | P2705 P28 | BLACK | BLACK | N/A (Heat sealed only) | BLACK | BLACK | N/A (Heat sealed only) |
| 5% Sheerweave 2705 | Oyster/Chestnut | P2705 P92 | BLACK | BLACK | N/A (Heat sealed only) | BLACK | BLACK | N/A (Heat sealed only) |
| 5% Sheerweave 2705 | Oyster/Pearl Gray | P2705 P14 | WHITE | WHITE | N/A (Heat sealed only) | WHITE | WHITE | N/A (Heat sealed only) |
| 5% Sheerweave 2705 | Oyster/Pewter | P2705 P91 | WHITE | WHITE | N/A (Heat sealed only) | WHITE | WHITE | N/A (Heat sealed only) |
| 5% Sheerweave 4000 | Alabaster | R0901 | WHITE | WHITE | WHITE | WHITE | WHITE | WHITE |
| 5% Sheerweave 4000 | Ash | R09 U64 | BLACK | BLACK | BLACK | BLACK | BLACK | BLACK |
| 5% Sheerweave 4000 | Chalk | R0902 | WHITE | WHITE | WHITE | WHITE | WHITE | WHITE |
| 5% Sheerweave 4000 | Ebony | R09 U65 | BLACK | BLACK | BLACK | BLACK | BLACK | BLACK |
| 5% Sheerweave 4000 | Granite | R0906 | WHITE | WHITE | WHITE | WHITE | WHITE | WHITE |
| 5% Sheerweave 4000 | Greystone | R0904 | WHITE | WHITE | WHITE | WHITE | WHITE | WHITE |
| 5% Sheerweave 4000 | Pebblestone | R09 U60 | WHITE | WHITE | WHITE | WHITE | WHITE | WHITE |
| 5% Sheerweave 4000 | Pewter | R09 U63 | WHITE | WHITE | WHITE | WHITE | WHITE | WHITE |
| 5% Sheerweave 4000 | Tobacco | R09 U66 | BLACK | BLACK | BLACK | BLACK | BLACK | BLACK |

* **STRONGLY RECOMMEND** Heat Sealed Hem as the Bottomrail option for bigger shades and for Sheerweave 5000 collections to improve appearance of the shade, and minimizing waviness.

The default color for the clutches, end plugs, plastic beaded chains, tensioners, and bottomrail for all patterns is either black or white as indicated above. Vanilla and bronze plastic beaded chains and tensioners are also available as an option, and must be specified at time of order. White and vanilla chains and tensioners will be coordinated to white clutches, end plugs, and bottomrails. Bronze and black chains and tensioners will be coordinated to black clutches, end plugs, and bottomrails.

Antique brass, nickel, oil rubbed & stainless steel chains will not have similar color coordinated component set, to ensure color coordinate as desired, please review colors under each clutch components.

NOTE: There are no pre-set default colors for cassette valances, fascia, or optional Deluxe bottomrails. These colors must be specified when ordering. Default trims not selected for Phifer screen patterns.

# HARDWARE COLOR COORDINATION CHART

| | | | Clutch Component Set | | | | TouchLift Mounting Bar Component Set | |
|---|---|---|---|---|---|---|---|---|
| Material Name | Color Name | Color # | Beaded Chain & Tensioner | Clutch & End Plugs Universal Brackets | Fabric Wrapped Bottomrail | Bracket and/or Bracket Cover | Cordless Mounting Bar & Bracket | Fabric Wrapped Bottomrail |
| 5% Sheerweave 4500 | Cappuccino | P4500 V95 | BLACK | BLACK | BLACK | BLACK | BLACK | BLACK |
| 5% Sheerweave 4500 | Chalk | P4500 P06 | WHITE | WHITE | WHITE | WHITE | WHITE | WHITE |
| 5% Sheerweave 4500 | Dark Bronze | P4500 V96 | BLACK | BLACK | BLACK | BLACK | BLACK | BLACK |
| 5% Sheerweave 4500 | Ebony | P4500 V10 | BLACK | BLACK | BLACK | BLACK | BLACK | BLACK |
| 5% Sheerweave 4500 | Ecru | P4500 Q59 | WHITE | WHITE | WHITE | WHITE | WHITE | WHITE |
| 5% Sheerweave 4500 | Golden Sand | P4500 Q60 | WHITE | WHITE | WHITE | WHITE | WHITE | WHITE |
| 5% Sheerweave 4500 | Granite | P4500 P10 | WHITE | WHITE | WHITE | WHITE | WHITE | WHITE |
| 5% Sheerweave 4500 | Linen | P4500 U32 | WHITE | WHITE | WHITE | WHITE | WHITE | WHITE |
| 5% Sheerweave 4500 | Pewter | P4500 V07 | WHITE | WHITE | WHITE | WHITE | WHITE | WHITE |
| 5% Sheerweave 4500 | Sandstone | P4500 V44 | WHITE | WHITE | WHITE | WHITE | WHITE | WHITE |
| 5% Sheerweave 5000 | Aura Sable | R1021 | BLACK | BLACK | BLACK | BLACK | BLACK | BLACK |
| 5% Sheerweave 5000 | Aura/Poetry | R10 S84 | BLACK | BLACK | BLACK | BLACK | BLACK | BLACK |
| 5% Sheerweave 5000 | Bark/Ash | R1009 | WHITE | WHITE | WHITE | WHITE | WHITE | WHITE |
| 5% Sheerweave 5000 | Bark/Pewter | R1010 | WHITE | WHITE | WHITE | WHITE | WHITE | WHITE |
| 5% Sheerweave 5000 | Bark/Tiger Oak | R1001 | BLACK | BLACK | BLACK | BLACK | BLACK | BLACK |
| 5% Sheerweave 5000 | Chenille/Driftwood | R1007 | BLACK | BLACK | BLACK | BLACK | BLACK | BLACK |
| 5% Sheerweave 5000 | Coffee | R10 S82 | BLACK | BLACK | BLACK | BLACK | BLACK | BLACK |
| 5% Sheerweave 5000 | Contour Essence | R1017 | WHITE | WHITE | WHITE | WHITE | WHITE | WHITE |
| 5% Sheerweave 5000 | Contour Natural | R1016 | WHITE | WHITE | WHITE | WHITE | WHITE | WHITE |
| 5% Sheerweave 5000 | Contour Smoke | R1018 | BLACK | BLACK | BLACK | BLACK | BLACK | BLACK |
| 5% Sheerweave 5000 | Contour/Smudge | R10 S77 | BLACK | BLACK | BLACK | BLACK | BLACK | BLACK |
| 5% Sheerweave 5000 | Linen/Pearl | R1014 | WHITE | WHITE | WHITE | WHITE | WHITE | WHITE |
| 5% Sheerweave 5000 | Linen/Taupe | R1015 | WHITE | WHITE | WHITE | WHITE | WHITE | WHITE* |
| 5% Sheerweave 5000 | Marble/Sand | R10 Q43 | WHITE | WHITE | WHITE | WHITE | WHITE | WHITE |
| 5% Sheerweave 5000 | Metro /Platinum | R1019 | WHITE | WHITE | WHITE | WHITE | WHITE | WHITE* |
| 5% Sheerweave 5000 | Pavestone | R1020 | WHITE | WHITE | WHITE | WHITE | WHITE | WHITE* |
| 5% Sheerweave 5000 | Tweed/Buckeye | R1003 | BLACK | BLACK | BLACK | BLACK | BLACK | BLACK |
| 5% Sheerweave 5000 | Tweed/Oatmeal | R1006 | WHITE | WHITE | WHITE | WHITE | WHITE | WHITE |
| 5% Sheerweave 5000 | Twine/Flagstone | R1012 | BLACK | BLACK | BLACK | BLACK | BLACK | BLACK |
| 5% Sheerweave 5000 | Twine/Metal | R1013 | BLACK | BLACK | BLACK | BLACK | BLACK | BLACK |
| 5% Sheerweave 5000 | Twine/Oatmeal | R1011 | WHITE | WHITE | WHITE | WHITE | WHITE | WHITE |
| 5% Sheerweave 5000 | Wicker/Mushroom | R10 Q51 | BLACK | BLACK | BLACK | BLACK | BLACK | BLACK |
| 7% Global Screen | Barley | RS14002 | WHITE | WHITE | WHITE | WHITE | WHITE | WHITE |
| 7% Global Screen | Canvas | RS14001 | WHITE | WHITE | WHITE | WHITE | WHITE | WHITE |
| 7% Global Screen | Platinum | RS14003 | WHITE | WHITE | WHITE | WHITE | WHITE | WHITE |
| 7% Sheerweave 5000 | Bamboo White/Wheat | R3409 | WHITE | WHITE | WHITE | WHITE | WHITE | WHITE |
| 7% Sheerweave 5000 | Bamboo/Wheat | R34 Q46 | BLACK | BLACK | BLACK | BLACK | BLACK | BLACK |
| 7% Sheerweave 5000 | Linen/Clay | R3408 | WHITE | WHITE | WHITE | WHITE | WHITE | WHITE |
| 7% Sheerweave 5000 | Twine/Jewel | R34 S73 | WHITE | WHITE | WHITE | WHITE | WHITE | WHITE |
| 10% E Screen | Charcoal/Charcoal | R1902 | BLACK | BLACK | BLACK | BLACK | BLACK | BLACK |
| 10% E Screen | Charcoal/Cocoa | R1907 | BLACK | BLACK | BLACK | BLACK | BLACK | BLACK |
| 10% E Screen | White Pearl | R1908 | WHITE | WHITE | WHITE | WHITE | WHITE | WHITE |
| 10% E Screen | White/Linen | R1905 | WHITE | WHITE | WHITE | WHITE | WHITE | WHITE |
| 10% E Screen | White/White | R1906 | WHITE | WHITE | WHITE | WHITE | WHITE | WHITE |
| 10% Sheerweave 2360 | Beige | P2360 Q20 | WHITE | WHITE | WHITE | WHITE | WHITE | WHITE |
| 10% Sheerweave 2360 | Beige/Pearl Gray | P2360 Q21 | WHITE | WHITE | WHITE | WHITE | WHITE | WHITE |
| 10% Sheerweave 2360 | Charcoal | P2360 V21 | BLACK | BLACK | BLACK | BLACK | BLACK | BLACK |
| 10% Sheerweave 2360 | Charcoal/Alpaca | P2360 V32 | BLACK | BLACK | BLACK | BLACK | BLACK | BLACK |
| 10% Sheerweave 2360 | Charcoal/Chestnut | P2360 V24 | BLACK | BLACK | BLACK | BLACK | BLACK | BLACK |
| 10% Sheerweave 2360 | Charcoal/Gray | P2360 V22 | BLACK | BLACK | BLACK | BLACK | BLACK | BLACK |
| 10% Sheerweave 2360 | Oyster | P2360 P12 | WHITE | WHITE | WHITE | WHITE | WHITE | WHITE |
| 10% Sheerweave 2360 | Oyster/Beige | P2360 P13 | WHITE | WHITE | WHITE | WHITE | WHITE | WHITE |
| 10% Sheerweave 2360 | Oyster/Pearl Gray | P2360 P14 | WHITE | WHITE | WHITE | WHITE | WHITE | WHITE |
| 10% Sheerweave 2360 | Pearl Gray | P2360 V20 | WHITE | WHITE | WHITE | WHITE | WHITE | WHITE |
| 10% Sheerweave 4100 | Alabaster | P4100 U59 | WHITE | WHITE | WHITE | WHITE | WHITE | WHITE |
| 10% Sheerweave 4100 | Ash | P4100 U64 | BLACK | BLACK | BLACK | BLACK | BLACK | BLACK |
| 10% Sheerweave 4100 | Chalk | P4100 U58 | WHITE | WHITE | WHITE | WHITE | WHITE | WHITE |
| 10% Sheerweave 4100 | Ebony | P4100 U65 | BLACK | BLACK | BLACK | BLACK | BLACK | BLACK |
| 10% Sheerweave 4100 | Granite | P4100 U62 | WHITE | WHITE | WHITE | WHITE | WHITE | WHITE |
| 10% Sheerweave 4100 | Greystone | P4100 U61 | WHITE | WHITE | WHITE | WHITE | WHITE | WHITE |
| 10% Sheerweave 4100 | Pebblestone | P4100 U60 | WHITE | WHITE | WHITE | WHITE | WHITE | WHITE |
| 10% Sheerweave 4100 | Pewter | P4100 U63 | WHITE | WHITE | WHITE | WHITE | WHITE | WHITE |
| 10% Sheerweave 4100 | Tobacco | P4100 U66 | BLACK | BLACK | BLACK | BLACK | BLACK | BLACK |
| 10% Sheerweave 5000 | Bamboo/Birch | R2603 | WHITE | WHITE | WHITE | WHITE | WHITE | WHITE |
| 10% Sheerweave 5000 | Crepe/Toasted Coconut | R26 U16 | WHITE | WHITE | WHITE | WHITE | WHITE | WHITE |
| 10% Sheerweave 5000 | Seaglass/Chardonnay | R26 U28 | WHITE | WHITE | WHITE | WHITE | WHITE | WHITE |
| 10% Sheerweave 5000 | Seaglass/Crystal | R26 U29 | WHITE | WHITE | WHITE | WHITE | WHITE | WHITE |
| 10% Sheerweave 5000 | Seaglass/Silver | R26 U24 | BLACK | BLACK | BLACK | BLACK | BLACK | BLACK |

* **STRONGLY RECOMMEND** Heat Sealed Hem as the Bottomrail option for bigger shades and for Sheerweave 5000 collections to improve appearance of the shade, and minimizing waviness.

The default color for the clutches, end plugs, plastic beaded chains, tensioners, and bottomrail for all patterns is either black or white as indicated above. Vanilla and bronze plastic beaded chains and tensioners are also available as an option, and must be specified at time of order. White and vanilla chains and tensioners will be coordinated to white clutches, end plugs, and bottomrails. Bronze and black chains and tensioners will be coordinated to black clutches, end plugs, and bottomrails.

Antique brass, nickel, oil rubbed & stainless steel chains will not have similar color coordinated component set, to ensure color coordinate as desired, please review colors under each clutch components.

NOTE: There are no pre-set default colors for cassette valances, fascia, or optional Deluxe bottomrails. These colors must be specified when ordering. Default trims not selected for Phifer screen patterns.

# HARDWARE COLOR COORDINATION CHART

| | | | Clutch Component Set | | | | TouchLift Mounting Bar Component Set | |
|---|---|---|---|---|---|---|---|---|
| Material Name | Color Name | Color # | Beaded Chain & Tensioner | Clutch & End Plugs Universal Brackets | Fabric Wrapped Bottomrail | Bracket and/or Bracket Cover | Cordless Mounting Bar & Bracket | Fabric Wrapped Bottomrail |
| Alexandria | Charcoal | RD403 | WHITE | WHITE | WHITE | WHITE | WHITE | WHITE |
| Alexandria | Duck Egg | RD402 | WHITE | WHITE | WHITE | WHITE | WHITE | WHITE |
| Alexandria | Oatmeal | RD401 | WHITE | WHITE | WHITE | WHITE | WHITE | WHITE |
| Astaire | Grey | RF42004 | WHITE | WHITE | WHITE | WHITE | WHITE | WHITE |
| Astaire | Ivory | RF42002 | WHITE | WHITE | WHITE | WHITE | WHITE | WHITE |
| Astaire | White | RF42001 | WHITE | WHITE | WHITE | WHITE | WHITE | WHITE |
| Avila R Blackout | Canvas | RB703 | WHITE | WHITE | N/A (Sealed Hem only) | WHITE | WHITE | N/A (Sealed Hem only) |
| Avila R Blackout | Chalk | RB702 | WHITE | WHITE | N/A (Sealed Hem only) | WHITE | WHITE | N/A (Sealed Hem only) |
| Avila R Blackout | Charcoal | RB708 | BLACK | BLACK | N/A (Sealed Hem only) | BLACK | BLACK | N/A (Sealed Hem only) |
| Avila R Blackout | Khaki | RB705 | WHITE | WHITE | N/A (Sealed Hem only) | WHITE | WHITE | N/A (Sealed Hem only) |
| Avila R Blackout | Linen | RB704 | WHITE | WHITE | N/A (Sealed Hem only) | WHITE | WHITE | N/A (Sealed Hem only) |
| Avila R Blackout | Marine | RB706 | BLACK | BLACK | N/A (Sealed Hem only) | BLACK | BLACK | N/A (Sealed Hem only) |
| Avila R Blackout | Onyx | RB709 | BLACK | BLACK | N/A (Sealed Hem only) | BLACK | BLACK | N/A (Sealed Hem only) |
| Avila R Blackout | Pewter | RB707 | BLACK | BLACK | N/A (Sealed Hem only) | BLACK | BLACK | N/A (Sealed Hem only) |
| Avila R Blackout | White | RB701 | WHITE | WHITE | N/A (Sealed Hem only) | WHITE | WHITE | N/A (Sealed Hem only) |
| Baroque | Champagne | RD501 | WHITE | WHITE | WHITE | WHITE | WHITE | WHITE |
| Baroque | Cyan | RD502 | BLACK | BLACK | BLACK | BLACK | BLACK | BLACK |
| Baroque | Ebony | RD504 | BLACK | BLACK | BLACK | BLACK | BLACK | BLACK |
| Baroque | Ruby | RD503 | BLACK | BLACK | BLACK | BLACK | BLACK | BLACK |
| Blackout - Solid | Alabaster | R4011 | WHITE | WHITE | WHITE | WHITE | WHITE | WHITE |
| Blackout - Solid | Bone | R4005 | WHITE | WHITE | WHITE | WHITE | WHITE | WHITE |
| Blackout - Solid | Buff | R4008 | WHITE | WHITE | WHITE | WHITE | WHITE | WHITE |
| Blackout - Solid | Oyster | R4006 | WHITE | WHITE | WHITE | WHITE | WHITE | WHITE |
| Blackout - Solid | White | R4001 | WHITE | WHITE | WHITE | WHITE | WHITE | WHITE |
| Brilliance | Birch | RD802 | WHITE | WHITE | WHITE | WHITE | WHITE | WHITE |
| Brilliance | Dove Gray | RD804 | BLACK | BLACK | BLACK | BLACK | BLACK | BLACK |
| Brilliance | Pearl | RD801 | WHITE | WHITE | WHITE | WHITE | WHITE | WHITE |
| Brilliance | Putty | RD803 | WHITE | WHITE | WHITE | WHITE | WHITE | WHITE |
| Brilliance | Pyrite | RD805 | BLACK | BLACK | BLACK | BLACK | BLACK | BLACK |
| Brilliance | Steel | RD806 | BLACK | BLACK | BLACK | BLACK | BLACK | BLACK |
| Brilliance Blackout | Birch | RB602 | WHITE | WHITE | WHITE | WHITE | WHITE | WHITE |
| Brilliance Blackout | Dove Gray | RB604 | BLACK | BLACK | BLACK | BLACK | BLACK | BLACK |
| Brilliance Blackout | Pearl | RB601 | WHITE | WHITE | WHITE | WHITE | WHITE | WHITE |
| Brilliance Blackout | Putty | RB603 | WHITE | WHITE | WHITE | WHITE | WHITE | WHITE |
| Brilliance Blackout | Pyrite | RB605 | BLACK | BLACK | BLACK | BLACK | BLACK | BLACK |
| Brilliance Blackout | Steel | RB606 | BLACK | BLACK | BLACK | BLACK | BLACK | BLACK |
| Carrara | Coal | RD606 | BLACK | BLACK | BLACK | BLACK | BLACK | BLACK |
| Carrara | Saddle | RD604 | BLACK | BLACK | BLACK | BLACK | BLACK | BLACK |
| Carrara | Silver | RD603 | WHITE | WHITE | WHITE | WHITE | WHITE | WHITE |
| Carrara | Storm | RD605 | BLACK | BLACK | BLACK | BLACK | BLACK | BLACK |
| Carrara | Tusk | RD602 | WHITE | WHITE | WHITE | WHITE | WHITE | WHITE |
| Carrara | White | RD601 | WHITE | WHITE | WHITE | WHITE | WHITE | WHITE |
| Carrara Blackout | Coal | RB406 | BLACK | BLACK | BLACK | BLACK | BLACK | BLACK |
| Carrara Blackout | Saddle | RB404 | BLACK | BLACK | BLACK | BLACK | BLACK | BLACK |
| Carrara Blackout | Silver | RB403 | WHITE | WHITE | WHITE | WHITE | WHITE | WHITE |
| Carrara Blackout | Storm | RB405 | BLACK | BLACK | BLACK | BLACK | BLACK | BLACK |
| Carrara Blackout | Tusk | RB402 | WHITE | WHITE | WHITE | WHITE | WHITE | WHITE |
| Carrara Blackout | White | RB401 | WHITE | WHITE | WHITE | WHITE | WHITE | WHITE |
| Claudio | Ash | RD706 | BLACK | BLACK | BLACK | BLACK | BLACK | BLACK |
| Claudio | Cloud | RD701 | WHITE | WHITE | WHITE | WHITE | WHITE | WHITE |
| Claudio | Cream | RD702 | WHITE | WHITE | WHITE | WHITE | WHITE | WHITE |
| Claudio | Gray Matters | RD708 | BLACK | BLACK | BLACK | BLACK | BLACK | BLACK |
| Claudio | Mink | RD704 | WHITE | WHITE | WHITE | WHITE | WHITE | WHITE |
| Claudio | Mist | RD703 | WHITE | WHITE | WHITE | WHITE | WHITE | WHITE |
| Claudio | Reef | RD705 | BLACK | BLACK | BLACK | BLACK | BLACK | BLACK |
| Claudio | Sailcloth | RD707 | WHITE | WHITE | WHITE | WHITE | WHITE | WHITE |

* **STRONGLY RECOMMEND** Heat Sealed Hem as the Bottomrail option for bigger shades and for Sheerweave 5000 collections to improve appearance of the shade, and minimizing waviness.

The default color for the clutches, end plugs, plastic beaded chains, tensioners, and bottomrail for all patterns is either black or white as indicated above. Vanilla and bronze plastic beaded chains and tensioners are also available as an option, and must be specified at time of order. White and vanilla chains and tensioners will be coordinated to white clutches, end plugs, and bottomrails. Bronze and black chains and tensioners will be coordinated to black clutches, end plugs, and bottomrails.

Antique brass, nickel, oil rubbed & stainless steel chains will not have similar color coordinated component set, to ensure color coordinate as desired, please review colors under each clutch components.

NOTE: There are no pre-set default colors for cassette valances, fascia, or optional Deluxe bottomrails. These colors must be specified when ordering. Default trims not selected for Phifer screen patterns.

# HARDWARE COLOR COORDINATION CHART

| | | | Clutch Component Set | | | | TouchLift Mounting Bar Component Set | |
|---|---|---|---|---|---|---|---|---|
| Material Name | Color Name | Color # | Beaded Chain & Tensioner | Clutch & End Plugs Universal Brackets | Fabric Wrapped Bottomrail | Bracket and/or Bracket Cover | Cordless Mounting Bar & Bracket | Fabric Wrapped Bottomrail |
| Claudio Blackout | Ash | RB506 | BLACK | BLACK | BLACK | BLACK | BLACK | BLACK |
| Claudio Blackout | Cloud | RB501 | WHITE | WHITE | WHITE | WHITE | WHITE | WHITE |
| Claudio Blackout | Cream | RB502 | WHITE | WHITE | WHITE | WHITE | WHITE | WHITE |
| Claudio Blackout | Mink | RB504 | WHITE | WHITE | WHITE | WHITE | WHITE | WHITE |
| Claudio Blackout | Mist | RB503 | WHITE | WHITE | WHITE | WHITE | WHITE | WHITE |
| Claudio Blackout | Reef | RB505 | BLACK | BLACK | BLACK | BLACK | BLACK | BLACK |
| Cusco | Chateau | RF6400 | WHITE | WHITE | WHITE | WHITE | WHITE | WHITE |
| Cusco | Coconut Husk | RF6401 | BLACK | BLACK | BLACK | BLACK | BLACK | BLACK |
| Cusco | Shadow Ridge | RF6402 | BLACK | BLACK | BLACK | BLACK | BLACK | BLACK |
| Darien | Bark | RD106 | BLACK | BLACK | BLACK | BLACK | BLACK | BLACK |
| Darien | Beige | RD101 | WHITE | WHITE | WHITE | WHITE | WHITE | WHITE |
| Darien | Charcoal | RD107 | BLACK | BLACK | BLACK | BLACK | BLACK | BLACK |
| Darien | Driftwood | RD103 | BLACK | BLACK | BLACK | BLACK | BLACK | BLACK |
| Darien | Mocha | RD104 | BLACK | BLACK | BLACK | BLACK | BLACK | BLACK |
| Darien | Sand | RD102 | BLACK | BLACK | BLACK | BLACK | BLACK | BLACK |
| Darien | Sea Mist | RD105 | BLACK | BLACK | BLACK | BLACK | BLACK | BLACK |
| Drizzle | Flax | RD201 | WHITE | WHITE | WHITE | WHITE | WHITE | WHITE |
| Drizzle | Graphite | RD205 | BLACK | BLACK | BLACK | BLACK | BLACK | BLACK |
| Drizzle | Hessian | RD202 | WHITE | WHTIE | WHITE | WHITE | WHITE | WHTIE |
| Drizzle | Iron | RD204 | WHITE | WHITE | WHITE | WHITE | WHITE | WHITE |
| Drizzle | Tweed | RD203 | BLACK | BLACK | BLACK | BLACK | BLACK | BLACK |
| Fiona | Grey | RD303 | WHITE | WHITE | WHITE | WHITE | WHITE | WHITE |
| Fiona | Sand | RD301 | WHITE | WHITE | WHITE | WHITE | WHITE | WHITE |
| Fiona | Smokey Blue | RD302 | WHITE | WHITE | WHITE | WHITE | WHITE | WHITE |
| Flocke Blackout | Chartreux | R9205 | WHITE | WHITE | WHITE | WHITE | WHITE | WHITE |
| Flocke Blackout | Crystal | R9204 | WHITE | WHITE | WHITE | WHITE | WHITE | WHITE |
| Flocke Blackout | Sea Cliff | R9202 | WHITE | WHITE | WHITE | WHITE | WHITE | WHITE |
| Flocke Blackout | Spun Silk | R9203 | WHITE | WHITE | WHITE | WHITE | WHITE | WHITE |
| Hayworth | Linen | RF32001 | WHITE | WHITE | WHITE | WHITE | WHITE | WHITE |
| Hayworth | White | RF32000 | WHITE | WHITE | WHITE | WHITE | WHITE | WHITE |
| Illusion | Dove | RF34003 | WHITE | WHITE | WHITE | WHITE | WHITE | WHITE |
| Illusion | Flannel | RF34004 | BLACK | BLACK | BLACK | BLACK | BLACK | BLACK |
| Illusion | Ivory | RF34002 | WHITE | WHITE | WHITE | WHITE | WHITE | WHITE |
| Illusion | Snow | RF34001 | WHITE | WHITE | WHITE | WHITE | WHITE | WHITE |
| Jasper | Country Linen | RF5303 | WHITE | WHITE | WHITE | WHITE | WHITE | WHITE |
| Jasper | Heather | RF5302 | WHITE | WHITE | WHITE | WHITE | WHITE | WHITE |
| Jasper | Storm Cloud | RF5300 | BLACK | BLACK | BLACK | BLACK | BLACK | BLACK |
| Jasper | Tweed | RF5301 | BLACK | BLACK | BLACK | BLACK | BLACK | BLACK |
| Linview | Ash | R5613 | WHITE | WHITE | WHITE | WHITE | WHITE | WHITE |
| Linview | Cabana Wood | R5603 | WHITE | WHITE | WHITE | WHITE | WHITE | WHITE |
| Linview | Fog | R5611 | WHITE | WHITE | WHITE | WHITE | WHITE | WHITE |
| Linview | Macadamia | R5606 | WHITE | WHITE | WHITE | WHITE | WHITE | WHITE |
| Linview | Midnight Blck | R5615 | BLACK | BLACK | BLACK | BLACK | BLACK | BLACK |
| Linview | Morning Light | R5602 | WHITE | WHITE | WHITE | WHITE | WHITE | WHITE |
| Linview | Navy | R5610 | BLACK | BLACK | BLACK | BLACK | BLACK | BLACK |
| Linview | New York Grey | R5614 | BLACK | BLACK | BLACK | BLACK | BLACK | BLACK |
| Linview | Pale Lapis | R5609 | BLACK | BLACK | BLACK | BLACK | BLACK | BLACK |
| Linview | Pale Oak | R5617 | WHITE | WHITE | WHITE | WHITE | WHITE | WHITE |
| Linview | Porpoise | R5612 | WHITE | WHITE | WHITE | WHITE | WHITE | WHITE |
| Linview | Rural Green | R5607 | WHITE | WHITE | WHITE | WHITE | WHITE | WHITE |
| Linview | Sea Smoke | R5616 | WHITE | WHITE | WHITE | WHITE | WHITE | WHITE |
| Linview | Skyward | R5608 | WHITE | WHITE | WHITE | WHITE | WHITE | WHITE |
| Linview | Slate | R5605 | BLACK | BLACK | BLACK | BLACK | BLACK | BLACK |
| Linview | Soft Linen | R5618 | WHITE | WHITE | WHITE | WHITE | WHITE | WHITE |
| Linview | Summer White | R5601 | WHITE | WHITE | WHITE | WHITE | WHITE | WHITE |
| Linview | Weathered Walnut | R5604 | WHITE | WHITE | WHITE | WHITE | WHITE | WHITE |

* **STRONGLY RECOMMEND** Heat Sealed Hem as the Bottomrail option for bigger shades and for Sheerweave 5000 collections to improve appearance of the shade, and minimizing waviness.

The default color for the clutches, end plugs, plastic beaded chains, tensioners, and bottomrail for all patterns is either black or white as indicated above. Vanilla and bronze plastic beaded chains and tensioners are also available as an option, and must be specified at time of order. White and vanilla chains and tensioners will be coordinated to white clutches, end plugs, and bottomrails. Bronze and black chains and tensioners will be coordinated to black clutches, end plugs, and bottomrails.

Antique brass, nickel, oil rubbed & stainless steel chains will not have similar color coordinated component set, to ensure color coordinate as desired, please review colors under each clutch components.

NOTE: There are no pre-set default colors for cassette valances, fascia, or optional Deluxe bottomrails. These colors must be specified when ordering. Default trims not selected for Phifer screen patterns.

# HARDWARE COLOR COORDINATION CHART

| | | | Clutch Component Set | | | | TouchLift Mounting Bar Component Set | |
|---|---|---|---|---|---|---|---|---|
| **Material Name** | **Color Name** | **Color #** | **Beaded Chain & Tensioner** | **Clutch & End Plugs Universal Brackets** | **Fabric Wrapped Bottomrail** | **Bracket and/or Bracket Cover** | **Cordless Mounting Bar & Bracket** | **Fabric Wrapped Bottomrail** |
| Linview Blackout | Alabaster | RB302 | WHITE | WHITE | N/A (Sealed Hem only) | WHITE | WHITE | N/A (Sealed Hem only) |
| Linview Blackout | Café Crème | RB303 | WHITE | WHITE | N/A (Sealed Hem only) | WHITE | WHITE | N/A (Sealed Hem only) |
| Linview Blackout | Collonade Gray | RB306 | BLACK | BLACK | N/A (Sealed Hem only) | BLACK | BLACK | N/A (Sealed Hem only) |
| Linview Blackout | Gauntlet Gray | RB309 | WHITE | WHITE | N/A (Sealed Hem only) | WHITE | WHITE | N/A (Sealed Hem only) |
| Linview Blackout | Pale Gray | RB307 | WHITE | WHITE | N/A (Sealed Hem only) | WHITE | WHITE | N/A (Sealed Hem only) |
| Linview Blackout | Pale Oak | RB311 | WHITE | WHITE | N/A (Heat sealed only) | WHITE | WHITE | WHITE |
| Linview Blackout | Pure White | RB301 | WHITE | WHITE | N/A (Sealed Hem only) | WHITE | WHITE | N/A (Sealed Hem only) |
| Linview Blackout | Sea Smoke | RB310 | WHITE | WHITE | N/A (Heat sealed only) | WHITE | WHITE | WHITE |
| Linview Blackout | Soft Linen | RB312 | WHITE | WHITE | N/A (Heat sealed only) | WHITE | WHITE | WHITE |
| Linview Blackout | Stone | RB304 | WHITE | WHITE | N/A (Sealed Hem only) | WHITE | WHITE | N/A (Sealed Hem only) |
| Linview Blackout | Tranquility | RB305 | BLACK | BLACK | N/A (Sealed Hem only) | BLACK | BLACK | N/A (Sealed Hem only) |
| Linview Blackout | Whale | RB308 | BLACK | BLACK | N/A (Sealed Hem only) | BLACK | BLACK | N/A (Sealed Hem only) |
| Montero | Dark Walnut | RF4200 | BLACK | BLACK | BLACK | BLACK | BLACK | BLACK |
| Montero | Java Coast | RF4201 | BLACK | BLACK | BLACK | BLACK | BLACK | BLACK |
| Montero | Wicker Basket | RF4202 | WHITE | WHITE | WHITE | WHITE | WHITE | WHITE |
| Moravia | Coastal | RF8602 | WHITE | WHITE | WHITE | WHITE | WHITE | WHITE |
| Moravia | Countryside | RF8600 | BLACK | BLACK | BLACK | BLACK | BLACK | BLACK |
| Moravia | Seabreeze | RF8601 | WHITE | WHITE | WHITE | WHITE | WHITE | WHITE |
| Santa Cruz | Bunglehouse Blue | RF3101 | BLACK | BLACK | BLACK | BLACK | BLACK | BLACK |
| Santa Cruz | Manchester | RF3100 | WHITE | WHITE | WHITE | WHITE | WHITE | WHITE |
| Santa Cruz | Night Sky | RF3106 | BLACK | BLACK | BLACK | BLACK | BLACK | BLACK |
| Santa Cruz | Rainforest | RF3107 | BLACK | BLACK | BLACK | BLACK | BLACK | BLACK |
| Santa Cruz Blackout | Bunglehouse Blue | RB102 | BLACK | BLACK | BLACK | BLACK | BLACK | BLACK |
| Santa Cruz Blackout | Manchester | RB101 | WHITE | WHITE | WHITE | WHITE | WHITE | WHITE |
| Santa Cruz Blackout | Night Sky | RB104 | BLACK | BLACK | BLACK | BLACK | BLACK | BLACK |
| Santa Cruz Blackout | Rainforest | RB103 | BLACK | BLACK | BLACK | BLACK | BLACK | BLACK |
| Scala Blackout | Gray | R10005 | WHITE | WHITE | N/A (Sealed Hem only) | WHITE | WHITE | N/A (Sealed Hem only) |
| Scala Blackout | Off White | R10002 | WHITE | WHITE | N/A (Sealed Hem only) | WHITE | WHITE | N/A (Sealed Hem only) |
| Scala Blackout | Silver | R10004 | WHITE | WHITE | N/A (Sealed Hem only) | WHITE | WHITE | N/A (Sealed Hem only) |
| Scala Blackout | White | R10001 | WHITE | WHITE | N/A (Sealed Hem only) | WHITE | WHITE | N/A (Sealed Hem only) |
| Sheerweave 7200R | Blazer | P7200R RB7 | BLACK | BLACK | N/A (Heat sealed only) | BLACK | BLACK | N/A (Heat sealed only) |
| Sheerweave 7200R | Chiffon | P7200R RB4 | WHITE | WHITE | N/A (Heat sealed only) | WHITE | WHITE | N/A (Heat sealed only) |
| Sheerweave 7200R | Chrome | P7200R RB5 | WHITE | WHITE | N/A (Heat sealed only) | WHITE | WHITE | N/A (Heat sealed only) |
| Sheerweave 7200R | Earl Grey | P7200R RB6 | WHITE | WHITE | N/A (Heat sealed only) | WHITE | WHITE | N/A (Heat sealed only) |
| Sheerweave 7200R | Oyster | P7200R RB2 | WHITE | WHITE | N/A (Heat sealed only) | WHITE | WHITE | N/A (Heat sealed only) |
| Sheerweave 7200R | Raven | P7200R RB8 | BLACK | BLACK | N/A (Heat sealed only) | BLACK | BLACK | N/A (Heat sealed only) |
| Sheerweave 7200R | Sail | P7200R RB3 | WHITE | WHITE | N/A (Heat sealed only) | WHITE | WHITE | N/A (Heat sealed only) |
| Sheerweave 7200R | Swan | P7200R RB1 | WHITE | WHITE | N/A (Heat sealed only) | WHITE | WHITE | N/A (Heat sealed only) |
| Sheerweave 7250R | Blazer | P7250R RL7 | BLACK | BLACK | N/A (Heat sealed only) | BLACK | BLACK | N/A (Heat sealed only) |
| Sheerweave 7250R | Chiffon | P7250R RL4 | WHITE | WHITE | N/A (Heat sealed only) | WHITE | WHITE | N/A (Heat sealed only) |
| Sheerweave 7250R | Chrome | P7250R RL5 | WHITE | WHITE | N/A (Heat sealed only) | WHITE | WHITE | N/A (Heat sealed only) |
| Sheerweave 7250R | Earl Grey | P7250R RL6 | WHITE | WHITE | N/A (Heat sealed only) | WHITE | WHITE | N/A (Heat sealed only) |
| Sheerweave 7250R | Oyster | P7250R RL2 | WHITE | WHITE | N/A (Heat sealed only) | WHITE | WHITE | N/A (Heat sealed only) |
| Sheerweave 7250R | Raven | P7250R RL8 | BLACK | BLACK | N/A (Heat sealed only) | BLACK | BLACK | N/A (Heat sealed only) |
| Sheerweave 7250R | Sail | P7250R RL3 | WHITE | WHITE | N/A (Heat sealed only) | WHITE | WHITE | N/A (Heat sealed only) |
| Sheerweave 7250R | Swan | P7250R RL1 | WHITE | WHITE | N/A (Heat sealed only) | WHITE | WHITE | N/A (Heat sealed only) |
| Sheerweave 7400 | Cotton | P7400 U80 | WHITE | WHITE | WHITE | WHITE | WHITE | WHITE |
| Sheerweave 7400 | Flint | P7400 U87 | BLACK | BLACK | BLACK | BLACK | BLACK | BLACK |
| Sheerweave 7400 | Parchment | P7400 U81 | WHITE | WHITE | WHITE | WHITE | WHITE | WHITE |
| Sheerweave 7400 | Pebble | P7400 U83 | WHITE | WHITE | WHITE | WHITE | WHITE | WHITE |
| Sheerweave 7400 | Seagrass | P7400 U84 | BLACK | BLACK | BLACK | BLACK | BLACK | BLACK |
| Sheerweave 7400 | Sesame | P7400 U82 | BLACK | BLACK | BLACK | BLACK | BLACK | BLACK |
| Sheerweave 7400 | Shale | P7400 U85 | BLACK | BLACK | BLACK | BLACK | BLACK | BLACK |
| Sheerweave 7400 | Spice | P7400 U86 | BLACK | BLACK | BLACK | BLACK | BLACK | BLACK |
| Sheerweave 7450 | Cotton | P7450 U80 | WHITE | WHITE | WHITE | WHITE | WHITE | WHITE |
| Sheerweave 7450 | Flint | P7450 U87 | BLACK | BLACK | BLACK | BLACK | BLACK | BLACK |
| Sheerweave 7450 | Parchment | P7450 U81 | WHITE | WHITE | WHITE | WHITE | WHITE | WHITE |
| Sheerweave 7450 | Pebble | P7450 U83 | WHITE | WHITE | WHITE | WHITE | WHITE | WHITE |
| Sheerweave 7450 | Seagrass | P7450 U84 | BLACK | BLACK | BLACK | BLACK | BLACK | BLACK |
| Sheerweave 7450 | Sesame | P7450 U82 | BLACK | BLACK | BLACK | BLACK | BLACK | BLACK |
| Sheerweave 7450 | Shale | P7450 U85 | BLACK | BLACK | BLACK | BLACK | BLACK | BLACK |
| Sheerweave 7450 | Spice | P7450 U86 | BLACK | BLACK | BLACK | BLACK | BLACK | BLACK |

* **STRONGLY RECOMMEND** Heat Sealed Hem as the Bottomrail option for bigger shades and for Sheerweave 5000 collections to improve appearance of the shade, and minimizing waviness.

The default color for the clutches, end plugs, plastic beaded chains, tensioners, and bottomrail for all patterns is either black or white as indicated above. Vanilla and bronze plastic beaded chains and tensioners are also available as an option, and must be specified at time of order. White and vanilla chains and tensioners will be coordinated to white clutches, end plugs, and bottomrails. Bronze and black chains and tensioners will be coordinated to black clutches, end plugs, and bottomrails.

Antique brass, nickel, oil rubbed & stainless steel chains will not have similar color coordinated component set, to ensure color coordinate as desired, please review colors under each clutch components.

NOTE: There are no pre-set default colors for cassette valances, fascia, or optional Deluxe bottomrails. These colors must be specified when ordering. Default trims not selected for Phifer screen patterns.

# HARDWARE COLOR COORDINATION CHART

| | | | Clutch Component Set | | | | TouchLift Mounting Bar Component Set | |
|---|---|---|---|---|---|---|---|---|
| Material Name | Color Name | Color # | Beaded Chain & Tensioner | Clutch & End Plugs Universal Brackets | Fabric Wrapped Bottomrail | Bracket and/or Bracket Cover | Cordless Mounting Bar & Bracket | Fabric Wrapped Bottomrail |
| Sheerweave 7500 | Cloud | P7500 R39 | WHITE | WHITE | N/A (Heat sealed only) | WHITE | WHITE | N/A (Heat sealed only) |
| Sheerweave 7500 | Dune | P7500 R17 | WHITE | WHITE | N/A (Heat sealed only) | WHITE | WHITE | N/A (Heat sealed only) |
| Sheerweave 7500 | Ice | P7500 R13 | WHITE | WHITE | N/A (Heat sealed only) | WHITE | WHITE | N/A (Heat sealed only) |
| Sheerweave 7500 | Limestone | P7500 R41 | WHITE | WHITE | N/A (Heat sealed only) | WHITE | WHITE | N/A (Heat sealed only) |
| Sheerweave 7500 | Midnight | P7500 R22 | BLACK | BLACK | N/A (Heat sealed only) | BLACK | BLACK | N/A (Heat sealed only) |
| Sheerweave 7500 | Midnightx2 | P7500 R99 | BLACK | BLACK | N/A (Heat sealed only) | BLACK | BLACK | N/A (Heat sealed only) |
| Sheerweave 7500 | Mist | P7500 R97 | WHITE | WHITE | N/A (Heat sealed only) | WHITE | WHITE | N/A (Heat sealed only) |
| Sheerweave 7500 | Nimbus | P7500 R42 | WHITE | WHITE | N/A (Heat sealed only) | WHITE | WHITE | N/A (Heat sealed only) |
| Sheerweave 7500 | Odyssey | P7500 R20 | BLACK | BLACK | N/A (Heat sealed only) | BLACK | BLACK | N/A (Heat sealed only) |
| Sheerweave 7500 | Orient | P7500 R21 | BLACK | BLACK | N/A (Heat sealed only) | BLACK | BLACK | N/A (Heat sealed only) |
| Sheerweave 7500 | Orientx2 | P7500 S97 | BLACK | BLACK | N/A (Heat sealed only) | BLACK | BLACK | N/A (Heat sealed only) |
| Sheerweave 7500 | Porcelain | P7500 R40 | WHITE | WHITE | N/A (Heat sealed only) | WHITE | WHITE | N/A (Heat sealed only) |
| Sheerweave 7500 | Stone | P7500 R19 | BLACK | BLACK | N/A (Heat sealed only) | BLACK | BLACK | N/A (Heat sealed only) |
| Sheerweave 7500 | Tundra | P7500 R43 | WHITE | WHITE | N/A (Heat sealed only) | WHITE | WHITE | N/A (Heat sealed only) |
| Sheerweave 7500R | Cloud | P7500R R45 | WHITE | WHITE | N/A (Heat sealed only) | WHITE | WHITE | N/A (Heat sealed only) |
| Sheerweave 7500R | Dune | P7500R R51 | WHITE | WHITE | N/A (Heat sealed only) | WHITE | WHITE | N/A (Heat sealed only) |
| Sheerweave 7500R | Ice | P7500R R44 | WHITE | WHITE | N/A (Heat sealed only) | WHITE | WHITE | N/A (Heat sealed only) |
| Sheerweave 7500R | Limestone | P7500R R47 | WHITE | WHITE | N/A (Heat sealed only) | WHITE | WHITE | N/A (Heat sealed only) |
| Sheerweave 7500R | Midnight | P7500R R55 | BLACK | BLACK | N/A (Heat sealed only) | BLACK | BLACK | N/A (Heat sealed only) |
| Sheerweave 7500R | Mist | P7500R R48 | WHITE | WHITE | N/A (Heat sealed only) | WHITE | WHITE | N/A (Heat sealed only) |
| Sheerweave 7500R | Nimbus | P7500R R49 | WHITE | WHITE | N/A (Heat sealed only) | WHITE | WHITE | N/A (Heat sealed only) |
| Sheerweave 7500R | Odyssey | P7500R R53 | BLACK | BLACK | N/A (Heat sealed only) | BLACK | BLACK | N/A (Heat sealed only) |
| Sheerweave 7500R | Orient | P7500R R54 | BLACK | BLACK | N/A (Heat sealed only) | BLACK | BLACK | N/A (Heat sealed only) |
| Sheerweave 7500R | Porcelain | P7500R R46 | WHITE | WHITE | N/A (Heat sealed only) | WHITE | WHITE | N/A (Heat sealed only) |
| Sheerweave 7500R | Stone | P7500R R52 | BLACK | BLACK | N/A (Heat sealed only) | BLACK | BLACK | N/A (Heat sealed only) |
| Sheerweave 7500R | Tundra | P7500R R50 | WHITE | WHITE | N/A (Heat sealed only) | WHITE | WHITE | N/A (Heat sealed only) |
| Sheerweave 7600 | Bright White | P7600 U90 | WHITE | WHITE | WHITE | WHITE | WHITE | WHITE |
| Sheerweave 7600 | Coal | P7600 U97 | BLACK | BLACK | BLACK | BLACK | BLACK | BLACK |
| Sheerweave 7600 | Coffee | P7600 U96 | BLACK | BLACK | BLACK | BLACK | BLACK | BLACK |
| Sheerweave 7600 | Dove Grey | P7600 U93 | WHITE | WHITE | WHITE | WHITE | WHITE | WHITE |
| Sheerweave 7600 | Ivory | P7600 U99 | WHITE | WHITE | WHITE | WHITE | WHITE | WHITE |
| Sheerweave 7600 | Khaki | P7600 U92 | WHITE | WHITE | WHITE | WHITE | WHITE | WHITE |
| Sheerweave 7600 | Shell | P7600 U91 | WHITE | WHITE | WHITE | WHITE | WHITE | WHITE |
| Sheerweave 7600 | Taupe | P7600 U94 | WHITE | WHITE | WHITE | WHITE | WHITE | WHITE |
| Sheerweave 7600 | Thunder | P7600 U95 | BLACK | BLACK | BLACK | BLACK | BLACK | BLACK |
| Sheerweave 7650 | Bright White | P7650 U90 | WHITE | WHITE | WHITE | WHITE | WHITE | WHITE |
| Sheerweave 7650 | Coal | P7650 U97 | BLACK | BLACK | BLACK | BLACK | BLACK | BLACK |
| Sheerweave 7650 | Coffee | P7650 U96 | BLACK | BLACK | BLACK | BLACK | BLACK | BLACK |
| Sheerweave 7650 | Dove Grey | P7650 U93 | WHITE | WHITE | WHITE | WHITE | WHITE | WHITE |
| Sheerweave 7650 | Ivory | P7650 U99 | WHITE | WHITE | WHITE | WHITE | WHITE | WHITE |
| Sheerweave 7650 | Khaki | P7650 U92 | WHITE | WHITE | WHITE | WHITE | WHITE | WHITE |
| Sheerweave 7650 | Shell | P7650 U91 | WHITE | WHITE | WHITE | WHITE | WHITE | WHITE |
| Sheerweave 7650 | Taupe | P7650 U94 | WHITE | WHITE | WHITE | WHITE | WHITE | WHITE |
| Sheerweave 7650 | Thunder | P7650 U95 | BLACK | BLACK | BLACK | BLACK | BLACK | BLACK |
| Sheerweave 7700R | Chalk | P7700R TB4 | WHITE | WHITE | WHITE | WHITE | WHITE | WHITE |
| Sheerweave 7700R | Concrete | P7700R TB3 | WHITE | WHITE | WHITE | WHITE | WHITE | WHITE |
| Sheerweave 7700R | Crystal | P7700R TB1 | WHITE | WHITE | WHITE | WHITE | WHITE | WHITE |
| Sheerweave 7700R | Graphite | P7700R TB5 | BLACK | BLACK | BLACK | BLACK | BLACK | BLACK |
| Sheerweave 7700R | Onyx | P7700R TB7 | BLACK | BLACK | BLACK | BLACK | BLACK | BLACK |
| Sheerweave 7700R | Pewter | P7700R TB6 | BLACK | BLACK | BLACK | BLACK | BLACK | BLACK |
| Sheerweave 7700R | Sand | P7700R TB2 | WHITE | WHITE | WHITE | WHITE | WHITE | WHITE |
| Sheerweave 7750R | Chalk | P7750R TL4 | WHITE | WHITE | N/A (Heat sealed only) | WHITE | WHITE | N/A (Heat sealed only) |
| Sheerweave 7750R | Concrete | P7750R TL3 | WHITE | WHITE | N/A (Heat sealed only) | WHITE | WHITE | N/A (Heat sealed only) |
| Sheerweave 7750R | Crystal | P7750R TL1 | WHITE | WHITE | N/A (Heat sealed only) | WHITE | WHITE | N/A (Heat sealed only) |
| Sheerweave 7750R | Graphite | P7750R TL5 | BLACK | BLACK | N/A (Heat sealed only) | BLACK | BLACK | N/A (Heat sealed only) |
| Sheerweave 7750R | Onyx | P7750R TL7 | BLACK | BLACK | N/A (Heat sealed only) | BLACK | BLACK | N/A (Heat sealed only) |
| Sheerweave 7750R | Pewter | P7750R TL6 | BLACK | BLACK | N/A (Heat sealed only) | BLACK | BLACK | N/A (Heat sealed only) |
| Sheerweave 7750R | Sand | P7750R TL2 | WHITE | WHITE | N/A (Heat sealed only) | WHITE | WHITE | N/A (Heat sealed only) |
| Sorrento | Bisque | RF35002 | WHITE | WHITE | WHITE | WHITE | WHITE | WHITE |
| Sorrento | Linen | RF35001 | WHITE | WHITE | WHITE | WHITE | WHITE | WHITE |
| Sorrento | Stucco | RF35003 | WHITE | WHITE | WHITE | WHITE | WHITE | WHITE |

* **STRONGLY RECOMMEND** Heat Sealed Hem as the Bottomrail option for bigger shades and for Sheerweave 5000 collections to improve appearance of the shade, and minimizing waviness.

The default color for the clutches, end plugs, plastic beaded chains, tensioners, and bottomrail for all patterns is either black or white as indicated above. Vanilla and bronze plastic beaded chains and tensioners are also available as an option, and must be specified at time of order. White and vanilla chains and tensioners will be coordinated to white clutches, end plugs, and bottomrails. Bronze and black chains and tensioners will be coordinated to black clutches, end plugs, and bottomrails.

Antique brass, nickel, oil rubbed & stainless steel chains will not have similar color coordinated component set, to ensure color coordinate as desired, please review colors under each clutch components.

NOTE: There are no pre-set default colors for cassette valances, fascia, or optional Deluxe bottomrails. These colors must be specified when ordering. Default trims not selected for Phifer screen patterns.

# HARDWARE COLOR COORDINATION CHART

| | | | Clutch Component Set | | | | TouchLift Mounting Bar Component Set | |
|---|---|---|---|---|---|---|---|---|
| Material Name | Color Name | Color # | Beaded Chain & Tensioner | Clutch & End Plugs Universal Brackets | Fabric Wrapped Bottomrail | Bracket and/or Bracket Cover | Cordless Mounting Bar & Bracket | Fabric Wrapped Bottomrail |
| Sunscreen (SW) 7000 | Canvas | R11 U67 | WHITE | WHITE | WHITE | WHITE | WHITE | WHITE |
| Sunscreen (SW) 7000 | Canyon | R11 V41 | WHITE | WHITE | WHITE | WHITE | WHITE | WHITE |
| Sunscreen (SW) 7000 | Cocoa | R11 U69 | BLACK | BLACK | BLACK | BLACK | BLACK | BLACK |
| Sunscreen (SW) 7000 | Wheat | R11 Q57 | WHITE | WHITE | WHITE | WHITE | WHITE | WHITE |
| Sunscreen (SW) 7000 | Birch | R1101 | WHITE | WHITE | WHITE | WHITE | WHITE | WHITE |
| Sunscreen (SW) 7000 | Graphite | R1107 | BLACK | BLACK | BLACK | BLACK | BLACK | BLACK |
| Sunscreen (SW) 7000 | Mushroom | R1102 | BLACK | BLACK | BLACK | BLACK | BLACK | BLACK |
| Sunscreen (SW) 7000 | Onyx | R1103 | BLACK | BLACK | BLACK | BLACK | BLACK | BLACK |
| Sunscreen (SW) 7000 | Sand | R1104 | WHITE | WHITE | WHITE | WHITE | WHITE | WHITE |
| Sunscreen (SW) 7000 | White | R1106 | WHITE | WHITE | WHITE | WHITE | WHITE | WHITE |
| Tundra | Antique White | RD9 02 | WHITE | WHITE | N/A (Heat sealed only) | WHITE | WHITE | WHITE |
| Tundra | Dark Gray | RD9 05 | BLACK | BLACK | N/A (Heat sealed only) | BLACK | BLACK | N/A (Heat sealed only) |
| Tundra | Ice White | RD9 01 | WHITE | WHITE | N/A (Heat sealed only) | WHITE | WHITE | WHITE |
| Tundra | Oxford Jean | RD9 06 | BLACK | BLACK | N/A (Heat sealed only) | BLACK | BLACK | N/A (Heat sealed only) |
| Tundra | Sand | RD9 03 | WHITE | WHITE | N/A (Heat sealed only) | WHITE | WHITE | WHITE |
| Tundra | Whale | RD9 04 | BLACK | BLACK | N/A (Heat sealed only) | BLACK | BLACK | N/A (Heat sealed only) |
| Tundra Blackout | Dark Gray | RB8 05 | BLACK | BLACK | N/A (Heat sealed only) | BLACK | BLACK | N/A (Heat sealed only) |
| Tundra Blackout | Ivory | RB8 02 | WHITE | WHITE | N/A (Heat sealed only) | WHITE | WHITE | WHITE |
| Tundra Blackout | Oxford Jean | RB8 06 | BLACK | BLACK | N/A (Heat sealed only) | BLACK | BLACK | N/A (Heat sealed only) |
| Tundra Blackout | Sand | RB8 03 | WHITE | WHITE | N/A (Heat sealed only) | WHITE | WHITE | WHITE |
| Tundra Blackout | Whale | RB8 04 | BLACK | BLACK | N/A (Heat sealed only) | BLACK | BLACK | N/A (Heat sealed only) |
| Tundra Blackout | White | RB8 01 | WHITE | WHITE | N/A (Heat sealed only) | WHITE | WHITE | WHITE |
| Uptown | Sterling | R7902 | WHITE | WHITE | WHITE | WHITE | WHITE | WHITE |
| Uptown | Sterling Room Darkening | R7901 | WHITE | WHITE | WHITE | WHITE | WHITE | WHITE |
| World Textures 1 | Cyprus Coast | R4802 | WHITE | WHITE | WHITE | WHITE | WHITE | WHITE |
| World Textures 1 | Medina Mirage | R4803 | WHITE | WHITE | WHITE | WHITE | WHITE | WHITE |
| World Textures 1 | Medina Vision | R4806 | WHITE | WHITE | WHITE | WHITE | WHITE | WHITE |
| World Textures 1 Blackout | Cypress Formal | R5001 | WHITE | WHITE | WHITE | WHITE | WHITE | WHITE |
| World Textures 2 | Oslo Blend | R4902 | WHITE | WHITE | WHITE | WHITE | WHITE | WHITE |
| World Textures 2 Blackout | Oslo Terrain | R5004 | WHITE | WHITE | WHITE | WHITE | WHITE | WHITE |

* **STRONGLY RECOMMEND** Heat Sealed Hem as the Bottomrail option for bigger shades and for Sheerweave 5000 collections to improve appearance of the shade, and minimizing waviness.

The default color for the clutches, end plugs, plastic beaded chains, tensioners, and bottomrail for all patterns is either black or white as indicated above. Vanilla and bronze plastic beaded chains and tensioners are also available as an option, and must be specified at time of order. White and vanilla chains and tensioners will be coordinated to white clutches, end plugs, and bottomrails. Bronze and black chains and tensioners will be coordinated to black clutches, end plugs, and bottomrails.

Antique brass, nickel, oil rubbed & stainless steel chains will not have similar color coordinated component set, to ensure color coordinate as desired, please review colors under each clutch components.

NOTE: There are no pre-set default colors for cassette valances, fascia, or optional Deluxe bottomrails. These colors must be specified when ordering. Default trims not selected for Phifer screen patterns.

The following pages contain solar optical information by pattern and color, it is important to understand the numbers and how they work best to your advantage.

## OPENNESS FACTOR (OF):

OF is a property that is often used to describe a screen material. The definition of OF is the percentage of the screen's surface area that is “open". The OF only describes one of the factors that regulates the amount of light passing through a roller shade. Blackout provides the most privacy, followed by 1%, Translucent, then 3%. Increasingly, 5%, 10%, then Transparent provide the least amount of privacy.

The OF and color coating will together decide how open the (shade) material will become. Different material colors absorb light differently. For example, a dark colored car is hotter than a light colored car on a sunny summer day.

Sunlight that hits the shade surface is divided into three parts that together make 100 % of the incoming light. The picture below illustrates the phenomenon.

**TRANSMISSION**: One part of the light will pass through the shade, and that is the part of the light that comes into the room. *The lower the number, the better.*

The transmission value tells how much light passes through the fabric. The transmission is dependent on three factors;
- the openness factor of the fabric
- the color of the fabric
- the coating on the fabric.

**REFLECTION**: One part of the light will be reflected when it hits the shade. *The higher the number, the better.*

**ABSORPTION**: The rest of the light will be absorbed by the shade. *The lower the number, the better.*

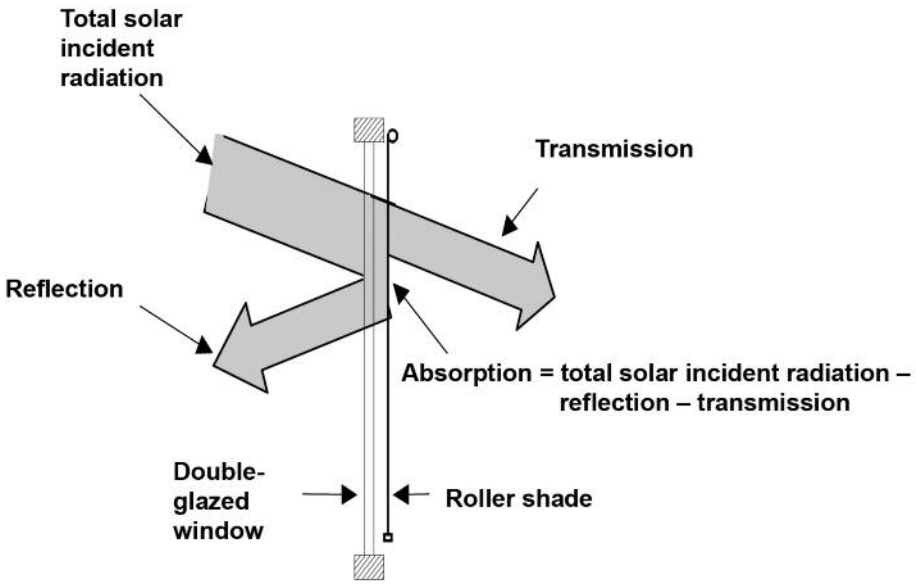


**UV PROTECTION (and Blackout Fabrics)**: The total solar incident radiation of wavelengths between 280 nm and 2500 nm is measured and optical values are reported. UV-light is included in these wavelengths. For those of our fabrics that are Blackout the transmission of light is 0 %. This signifies 100 % blocking of all sunlight, including UV-light. The UV-protection is 100 % for the fabric. In order to get complete blocking of the light the fabric has to be fitted so that no light is transmitted on the sides of the fabric. *The higher the number, the better.*

# SOLAR OPTICAL CHART

| Material Name | Color Name | Color # | Openness Factor* | Transmission* | Reflection* | Absorption* | UV Rating* |
|---|---|---|---|---|---|---|---|
| 1% E Screen | Charcoal/Charcoal | R8009 | 1% | 1 | 4 | 95 | 99% |
| 1% E Screen | Charcoal/Cocoa | R8007 | 1% | 2 | 5 | 93 | 99% |
| 1% E Screen | Charcoal/Grey | R8008 | 1% | 3 | 9 | 88 | 99% |
| 1% E Screen | White | R8004 | 1% | 14 | 75 | 11 | 99% |
| 1% E Screen | White/Linen | R8005 | 1% | 14 | 66 | 20 | 99% |
| 1% E Screen | White/Pearl | R8003 | 1% | 9 | 58 | 33 | 99% |
| 1% Sheerweave 2500 | Beige | R01 Q20 | 1% | 7 | 50 | 43 | 99% |
| 1% Sheerweave 2500 | Beige/Pearl Gray | R01 Q21 | 1% | 5 | 42 | 53 | 99% |
| 1% Sheerweave 2500 | Charcoal | R0103 | 1% | 2 | 8 | 90 | 99% |
| 1% Sheerweave 2500 | Charcoal/Alpaca | R0109 | 1% | 1 | 16 | 83 | 99% |
| 1% Sheerweave 2500 | Charcoal/Chestnut | R0104 | 1% | 1 | 6 | 93 | 99% |
| 1% Sheerweave 2500 | Charcoal/Gray | R01 V22 | 1% | 2 | 8 | 90 | 99% |
| 1% Sheerweave 2500 | Oyster | R0105 | 1% | 15 | 68 | 17 | 99% |
| 1% Sheerweave 2500 | Oyster/Beige | R0106 | 1% | 10 | 60 | 30 | 99% |
| 1% Sheerweave 2500 | Oyster/Pearl Gray | R0107 | 1% | 7 | 50 | 43 | 99% |
| 1% Sheerweave 2500 | Pearl Gray | R01 V20 | 1% | 3 | 32 | 65 | 99% |
| 1% Sheerweave 2701 | Charcoal | RS21 V21 | 1% | 3 | 4 | 93 | 99% |
| 1% Sheerweave 2701 | Charcoal/Brown | RS21 V66 | 1% | 4 | 17 | 78 | 99% |
| 1% Sheerweave 2701 | Charcoal/Gray | RS21 V22 | 1% | 3 | 14 | 83 | 99% |
| 1% Sheerweave 2701 | Charcoal/Slate | RS21 V64 | 1% | 4 | 30 | 66 | 99% |
| 1% Sheerweave 2701 | Charcoal/Taupe | RS21 V65 | 1% | 4 | 25 | 71 | 99% |
| 1% Sheerweave 2701 | Oyster | RS2101 | 1% | 21 | 64 | 15 | 99% |
| 1% Sheerweave 2701 | Oyster/Beige | RS2102 | 1% | 15 | 57 | 28 | 99% |
| 1% Sheerweave 2701 | Oyster/Charcoal | RS2106 | 1% | 6 | 41 | 53 | 99% |
| 1% Sheerweave 2701 | Oyster/Chestnut | RS2105 | 1% | 6 | 41 | 53 | 99% |
| 1% Sheerweave 2701 | Oyster/Pearl Gray | RS2103 | 1% | 8 | 54 | 38 | 99% |
| 1% Sheerweave 2701 | Oyster/Pewter | RS2104 | 1% | 6 | 43 | 51 | 99% |
| 1% Sheerweave 4901 | Birch | P4901 Q25 | 1% | 5 | 57 | 38 | 99% |
| 1% Sheerweave 4901 | Chalk | P4901 P06 | 1% | 9 | 83 | 8 | 99% |
| 1% Sheerweave 4901 | Chalk/Black | P4901 P25 | 1% | 1 | 22 | 77 | 99% |
| 1% Sheerweave 4901 | Chalk/Wheat | P4901 P26 | 1% | 6 | 65 | 29 | 99% |
| 1% Sheerweave 4901 | Cobblestone | P4901 Q26 | 1% | 3 | 36 | 61 | 99% |
| 1% Sheerweave 4901 | Ebony | P4901 V10 | 1% | 1 | 5 | 94 | 99% |
| 1% Sheerweave 4901 | Flaxen | P4901 Q22 | 1% | 3 | 42 | 55 | 99% |
| 1% Sheerweave 4901 | Kettal Grey | P4901 Q07 | 1% | 3 | 48 | 49 | 99% |
| 1% Sheerweave 4901 | Pewter/Chalk | P4901 V03 | 1% | 3 | 56 | 41 | 99% |
| 1% Sheerweave 4901 | Slate | P4901 V28 | 1% | 2 | 11 | 87 | 99% |
| 1% Sheerweave 4901 | Soft Grey | P4901 Q27 | 1% | 5 | 58 | 37 | 99% |
| 1% Sheerweave 4901 | Tobacco | P4901 Q16 | 1% | 3 | 42 | 55 | 99% |
| 1% Sheerweave 4901 | Whitesands | P4901 Q23 | 1% | 7 | 65 | 28 | 99% |
| 1% Sheerweave 5000 | Jute/Coffee | P5001 R88 | 1% | 5 | 15 | 80 | 99% |
| 1% Sheerweave 5000 | Jute/Flax | P5001 R86 | 1% | 30 | 56 | 14 | 99% |
| 1% Sheerweave 5000 | Jute/Latte | P5001 R87 | 1% | 24 | 50 | 26 | 99% |
| 1% Sheerweave 5000 | Jute/Parchment | P5001 R85 | 1% | 13 | 70 | 17 | 99% |
| 1% Toka | Bone | RS11002 | 1% | 16 | 59 | 25 | 99% |
| 1% Toka | Platinum | RS11003 | 1% | 10 | 47 | 43 | 99% |
| 1% Toka | White | RS11001 | 1% | 19 | 66 | 15 | 99% |
| 3% E Screen | Charcoal/Charcoal | R8102 | 3% | 5 | 4 | 91 | 97% |
| 3% E Screen | Charcoal/Cocoa | R8107 | 3% | 4 | 7 | 89 | 97% |
| 3% E Screen | Charcoal/Grey | R8108 | 3% | 5 | 10 | 85 | 97% |
| 3% E Screen | White/Linen | R8104 | 3% | 16 | 63 | 21 | 97% |
| 3% E Screen | White/Pearl | R8105 | 3% | 10 | 52 | 38 | 97% |
| 3% E Screen | White/White | R8106 | 3% | 16 | 73 | 11 | 97% |
| 3% M Screen | Charcoal/Apricot | R5803 | 3% | 5 | 13 | 82 | 97% |
| 3% M Screen | Charcoal/Charcoal | R5805 | 3% | 3 | 4 | 93 | 97% |
| 3% M Screen | Charcoal/Sable | R5808 | 3% | 4 | 12 | 84 | 97% |
| 3% M Screen | White Linen | R5807 | 3% | 15 | 64 | 21 | 97% |
| 3% M Screen | White/White | R5801 | 3% | 18 | 71 | 11 | 97% |
| 3% Sheerweave 2410 | Beige | R06 Q20 | 3% | 10 | 48 | 42 | 97% |
| 3% Sheerweave 2410 | Beige/Pearl Gray | R06 Q21 | 3% | 7 | 39 | 54 | 97% |
| 3% Sheerweave 2410 | Charcoal | R0603 | 3% | 3 | 3 | 94 | 97% |
| 3% Sheerweave 2410 | Charcoal/Alpaca | R0609 | 3% | 4 | 20 | 76 | 97% |
| 3% Sheerweave 2410 | Charcoal/Chestnut | R0604 | 3% | 3 | 6 | 91 | 97% |
| 3% Sheerweave 2410 | Charcoal/Gray | R06 V22 | 3% | 3 | 9 | 88 | 97% |
| 3% Sheerweave 2410 | Oyster | R0605 | 3% | 17 | 64 | 19 | 97% |
| 3% Sheerweave 2410 | Oyster/Beige | R0606 | 3% | 11 | 55 | 34 | 97% |
| 3% Sheerweave 2410 | Oyster/Pearl Gray | R0607 | 3% | 9 | 44 | 47 | 97% |
| 3% Sheerweave 2410 | Pearl Gray | R06 V20 | 3% | 6 | 31 | 63 | 97% |

*See **SOLAR OPTICAL INFORMATION** section for detail.

# SOLAR OPTICAL CHART

| Material Name | Color Name | Color # | Openness Factor* | Transmission* | Reflection* | Absorption* | UV Rating* |
|---|---|---|---|---|---|---|---|
| 3% Sheerweave 2703 | Charcoal | P2703 V21 | 3% | 5 | 4 | 91 | 97% |
| 3% Sheerweave 2703 | Charcoal/Brown | P2703 V66 | 3% | 6 | 17 | 77 | 97% |
| 3% Sheerweave 2703 | Charcoal/Gray | P2703 V22 | 3% | 5 | 13 | 82 | 97% |
| 3% Sheerweave 2703 | Charcoal/Slate | P2703 V64 | 3% | 7 | 27 | 65 | 97% |
| 3% Sheerweave 2703 | Charcoal/Taupe | P2703 V65 | 3% | 6 | 24 | 70 | 97% |
| 3% Sheerweave 2703 | Oyster | P2703 P12 | 3% | 22 | 62 | 16 | 97% |
| 3% Sheerweave 2703 | Oyster/Beige | P2703 P13 | 3% | 15 | 58 | 27 | 97% |
| 3% Sheerweave 2703 | Oyster/Charcoal | P2703 P28 | 3% | 7 | 40 | 53 | 97% |
| 3% Sheerweave 2703 | Oyster/Chestnut | P2703 P92 | 3% | 7 | 42 | 51 | 97% |
| 3% Sheerweave 2703 | Oyster/Pearl Gray | P2703 P14 | 3% | 9 | 53 | 38 | 97% |
| 3% Sheerweave 2703 | Oyster/Pewter | P2703 P91 | 3% | 8 | 44 | 48 | 97% |
| 3% Sheerweave 4400 | Alabaster | RS2200 | 3% | 10 | 62 | 28 | 97% |
| 3% Sheerweave 4400 | Ash | RS2 U64 | 3% | 3 | 10 | 87 | 97% |
| 3% Sheerweave 4400 | Chalk | RS2202 | 3% | 12 | 70 | 18 | 97% |
| 3% Sheerweave 4400 | Ebony | RS2 U65 | 3% | 3 | 3 | 94 | 97% |
| 3% Sheerweave 4400 | Granite | RS2 U62 | 3% | 6 | 48 | 46 | 97% |
| 3% Sheerweave 4400 | Greystone | RS2201 | 3% | 6 | 39 | 55 | 97% |
| 3% Sheerweave 4400 | Pebblestone | RS2 U60 | 3% | 9 | 51 | 40 | 97% |
| 3% Sheerweave 4400 | Pewter | RS2203 | 3% | 3 | 26 | 71 | 97% |
| 3% Sheerweave 4400 | Tobacco | RS2 U66 | 3% | 3 | 5 | 92 | 97% |
| 3% Sheerweave 4600 | Cappuccino | P4600 V95 | 3% | 4 | 20 | 76 | 97% |
| 3% Sheerweave 4600 | Chalk | P4600 P06 | 3% | 10 | 74 | 16 | 97% |
| 3% Sheerweave 4600 | Dark Bronze | P4600 V96 | 3% | 4 | 5 | 91 | 97% |
| 3% Sheerweave 4600 | Ebony | P4600 V10 | 3% | 5 | 43 | 52 | 97% |
| 3% Sheerweave 4600 | Ecru | P4600 Q59 | 3% | 7 | 58 | 35 | 97% |
| 3% Sheerweave 4600 | Golden Sand | P4600 Q60 | 3% | 6 | 37 | 57 | 97% |
| 3% Sheerweave 4600 | Granite | P4600 P10 | 3% | 5 | 43 | 52 | 97% |
| 3% Sheerweave 4600 | Linen | P4600 U32 | 3% | 8 | 64 | 28 | 97% |
| 3% Sheerweave 4600 | Pewter | P4600 V07 | 3% | 5 | 31 | 64 | 97% |
| 3% Sheerweave 4600 | Sandstone | P4600 V44 | 3% | 5 | 39 | 56 | 97% |
| 3% Sheerweave 4903 | Birch | P4903 Q25 | 3% | 7 | 56 | 37 | 97% |
| 3% Sheerweave 4903 | Chalk | P4903 P06 | 3% | 11 | 81 | 8 | 97% |
| 3% Sheerweave 4903 | Chalk/Black | P4903 P25 | 3% | 3 | 25 | 72 | 97% |
| 3% Sheerweave 4903 | Chalk/Wheat | P4903 P26 | 3% | 9 | 65 | 26 | 97% |
| 3% Sheerweave 4903 | Cobblestone | P4903 Q26 | 3% | 4 | 38 | 58 | 97% |
| 3% Sheerweave 4903 | Ebony | P4903 V10 | 3% | 3 | 5 | 92 | 97% |
| 3% Sheerweave 4903 | Flaxen | P4903 Q22 | 3% | 6 | 43 | 51 | 97% |
| 3% Sheerweave 4903 | Kettal Grey | P4903 Q07 | 3% | 4 | 47 | 49 | 97% |
| 3% Sheerweave 4903 | Pewter/Chalk | P4903 V03 | 3% | 4 | 53 | 43 | 97% |
| 3% Sheerweave 4903 | Slate | P4903 V28 | 3% | 3 | 12 | 85 | 97% |
| 3% Sheerweave 4903 | Soft Grey | P4903 Q27 | 3% | 8 | 57 | 35 | 97% |
| 3% Sheerweave 4903 | Tobacco | P4903 Q16 | 3% | 3 | 8 | 89 | 97% |
| 3% Sheerweave 4903 | Whitesands | P4903 Q23 | 3% | 9 | 63 | 28 | 97% |
| 3% Sheerweave 5000 | Bark/Sienna | R0710 | 3% | 6 | 16 | 78 | 97% |
| 3% Sheerweave 5000 | Chenille/Honey | R0707 | 3% | 26 | 47 | 27 | 97% |
| 3% Sheerweave 5000 | Chenille/Marshmallow | R07 R89 | 3% | 16 | 67 | 17 | 97% |
| 3% Sheerweave 5000 | Chenille/Pearl | R07 R90 | 3% | 32 | 53 | 15 | 97% |
| 3% Sheerweave 5000 | Linen/Burlap | R07 U11 | 3% | 10 | 30 | 60 | 97% |
| 3% Sheerweave 5000 | Linen/Cinnamon | R0702 | 3% | 6 | 20 | 74 | 97% |
| 3% Sheerweave 5000 | Linen/Cranberry | R07 R11 | 3% | 7 | 17 | 76 | 97% |
| 3% Sheerweave 5000 | Linen/Cream | R0704 | 3% | 22 | 46 | 31 | 97% |
| 3% Sheerweave 5000 | Linen/Fig | R0705 | 3% | 6 | 15 | 79 | 97% |
| 3% Sheerweave 5000 | Linen/Topaz | R07 U10 | 3% | 11 | 24 | 65 | 97% |
| 3% Sheerweave 5000 | Wicker/Straw | R07 R93 | 3% | 14 | 48 | 38 | 97% |
| 3% T Screen | Charcoal/Charcoal | RS16005 | 3% | 3 | 4 | 93 | 97% |
| 3% T Screen | Charcoal/Grey | RS16006 | 3% | 5 | 11 | 84 | 97% |
| 3% T Screen | Sable/Charcoal | RS16003 | 3% | 8 | 15 | 77 | 97% |
| 3% T Screen | White/Pearl | RS16004 | 3% | 13 | 49 | 38 | 97% |
| 3% T Screen | White/Sable-Straw | RS16002 | 3% | 16 | 56 | 28 | 97% |
| 3% T Screen | White/White | RS16001 | 3% | 18 | 70 | 12 | 97% |
| 4% S Screen | Ginger | RS15006 | 4% | 9 | 36 | 55 | 96% |
| 4% S Screen | Granite | RS15004 | 4% | 9 | 31 | 60 | 96% |
| 4% S Screen | Papyrus | RS15003 | 4% | 11 | 38 | 51 | 96% |
| 4% S Screen | Porcelain | RS15001 | 4% | 12 | 59 | 29 | 96% |
| 4% S Screen | Sesame | RS15007 | 4% | 6 | 18 | 76 | 96% |

*See **SOLAR OPTICAL INFORMATION** section for detail.

# SOLAR OPTICAL CHART

| Material Name | Color Name | Color # | Openness Factor* | Transmission* | Reflection* | Absorption* | UV Rating* |
|---|---|---|---|---|---|---|---|
| 4% Silver Screen | Beige | RS6501 | 4% | 6 | 74 | 20 | 96% |
| 4% Silver Screen | Black | RS6504 | 4% | 4 | 75 | 21 | 96% |
| 4% Silver Screen | Bronze | RS6503 | 4% | 5 | 77 | 18 | 96% |
| 4% Silver Screen | Light Grey | RS6500 | 4% | 4 | 77 | 19 | 96% |
| 4% Silver Screen | White | RS6502 | 4% | 5 | 76 | 19 | 96% |
| 5% E Screen | Charcoal/Charcoal | R5105 | 5% | 7 | 10 | 83 | 95% |
| 5% E Screen | Charcoal/Cocoa | R5104 | 5% | 7 | 6 | 87 | 95% |
| 5% E Screen | Charcoal/Grey | R5110 | 5% | 7 | 10 | 83 | 95% |
| 5% E Screen | Pure White | R5101 | 5% | 20 | 71 | 9 | 95% |
| 5% E Screen | White/Linen | R5108 | 5% | 20 | 62 | 18 | 95% |
| 5% E Screen | White/Pearl | R5109 | 5% | 12 | 51 | 37 | 95% |
| 5% M Screen Deco | Flagstone | R6107 | 5% | 8 | 21 | 72 | 95% |
| 5% M Screen Deco | Harvest Wheat | R6104 | 5% | 8 | 16 | 76 | 95% |
| 5% M Screen Deco | Hazelnut | R6105 | 5% | 7 | 14 | 79 | 95% |
| 5% M Screen Deco | Parchment | R6106 | 5% | 16 | 63 | 21 | 95% |
| 5% M Screen Deco | River Rock | R6102 | 5% | 10 | 33 | 57 | 95% |
| 5% M Screen Deco | Tumbleweed | R6103 | 5% | 10 | 29 | 61 | 95% |
| 5% Sheerweave 2000 | Bone | P2000 Q05 | 5% | 18 | 55 | 27 | 95% |
| 5% Sheerweave 2000 | Bone/Platinum | P2000 Q06 | 5% | 12 | 43 | 45 | 95% |
| 5% Sheerweave 2000 | Bronze | P2000 Q10 | 5% | 5 | 7 | 88 | 95% |
| 5% Sheerweave 2000 | Charcoal | P2000 V21 | 5% | 6 | 4 | 90 | 95% |
| 5% Sheerweave 2000 | Charcoal/Chestnut | P2000 V24 | 5% | 6 | 7 | 87 | 95% |
| 5% Sheerweave 2000 | Charcoal/Gray | P2000 V22 | 5% | 7 | 9 | 84 | 95% |
| 5% Sheerweave 2000 | Platinum | P2000 V04 | 5% | 10 | 35 | 55 | 95% |
| 5% Sheerweave 2000 | White | P2000 P02 | 5% | 20 | 67 | 13 | 95% |
| 5% Sheerweave 2000 | White/Bone | P2000 P04 | 5% | 18 | 61 | 21 | 95% |
| 5% Sheerweave 2000 | White/Platinum | P2000 P05 | 5% | 13 | 49 | 38 | 95% |
| 5% Sheerweave 2390 | Beige | RS1 Q20 | 5% | 14 | 47 | 39 | 95% |
| 5% Sheerweave 2390 | Beige/Pearl Gray | RS1 Q21 | 5% | 11 | 38 | 51 | 95% |
| 5% Sheerweave 2390 | Charcoal | RS1105 | 5% | 4 | 4 | 92 | 95% |
| 5% Sheerweave 2390 | Charcoal/Alpaca | RS1106 | 5% | 7 | 18 | 75 | 95% |
| 5% Sheerweave 2390 | Charcoal/Chestnut | RS1104 | 5% | 6 | 6 | 88 | 95% |
| 5% Sheerweave 2390 | Charcoal/Gray | RS1102 | 5% | 5 | 9 | 86 | 95% |
| 5% Sheerweave 2390 | Oyster | RS1100 | 5% | 21 | 61 | 18 | 95% |
| 5% Sheerweave 2390 | Oyster/Beige | RS1101 | 5% | 17 | 54 | 29 | 95% |
| 5% Sheerweave 2390 | Oyster/Pearl Gray | RS1103 | 5% | 14 | 45 | 41 | 95% |
| 5% Sheerweave 2390 | Pearl Gray | RS1 V20 | 5% | 10 | 31 | 59 | 95% |
| 5% Sheerweave 2705 | Charcoal | P2705 V21 | 5% | 7 | 4 | 89 | 95% |
| 5% Sheerweave 2705 | Charcoal/Brown | P2705 V66 | 5% | 9 | 16 | 75 | 95% |
| 5% Sheerweave 2705 | Charcoal/Gray | P2705 V22 | 5% | 8 | 6 | 86 | 95% |
| 5% Sheerweave 2705 | Charcoal/Slate | P2705 V64 | 5% | 9 | 25 | 66 | 95% |
| 5% Sheerweave 2705 | Charcoal/Taupe | P2705 V65 | 5% | 9 | 21 | 70 | 95% |
| 5% Sheerweave 2705 | Oyster | P2705 P12 | 5% | 22 | 62 | 16 | 95% |
| 5% Sheerweave 2705 | Oyster/Beige | P2705 P13 | 5% | 23 | 54 | 23 | 95% |
| 5% Sheerweave 2705 | Oyster/Charcoal | P2705 P28 | 5% | 12 | 40 | 48 | 95% |
| 5% Sheerweave 2705 | Oyster/Chestnut | P2705 P92 | 5% | 12 | 43 | 45 | 95% |
| 5% Sheerweave 2705 | Oyster/Pearl Gray | P2705 P14 | 5% | 19 | 51 | 30 | 95% |
| 5% Sheerweave 2705 | Oyster/Pewter | P2705 P91 | 5% | 11 | 46 | 43 | 95% |
| 5% Sheerweave 4000 | Alabaster | R0901 | 5% | 15 | 57 | 28 | 95% |
| 5% Sheerweave 4000 | Ash | R09 U64 | 5% | 7 | 11 | 82 | 95% |
| 5% Sheerweave 4000 | Chalk | R0902 | 5% | 16 | 68 | 16 | 95% |
| 5% Sheerweave 4000 | Ebony | R09 U65 | 5% | 6 | 5 | 89 | 95% |
| 5% Sheerweave 4000 | Granite | R0906 | 5% | 11 | 41 | 48 | 95% |
| 5% Sheerweave 4000 | Greystone | R0904 | 5% | 10 | 34 | 56 | 95% |
| 5% Sheerweave 4000 | Pebblestone | R09 U60 | 5% | 14 | 49 | 37 | 95% |
| 5% Sheerweave 4000 | Pewter | R09 U63 | 5% | 8 | 27 | 65 | 95% |
| 5% Sheerweave 4000 | Tobacco | R09 U66 | 5% | 7 | 5 | 88 | 95% |

*See **SOLAR OPTICAL INFORMATION** section for detail.

# SOLAR OPTICAL CHART

| Material Name | Color Name | Color # | Openness Factor* | Transmission* | Reflection* | Absorption* | UV Rating* |
|---|---|---|---|---|---|---|---|
| 5% Sheerweave 4500 | Cappuccino | P4500 V95 | 5% | 6 | 18 | 76 | 95% |
| 5% Sheerweave 4500 | Chalk | P4500 P06 | 5% | 12 | 74 | 14 | 95% |
| 5% Sheerweave 4500 | Dark Bronze | P4500 V96 | 5% | 7 | 5 | 88 | 95% |
| 5% Sheerweave 4500 | Ebony | P4500 V10 | 5% | 5 | 3 | 92 | 95% |
| 5% Sheerweave 4500 | Ecru | P4500 Q59 | 5% | 9 | 56 | 35 | 95% |
| 5% Sheerweave 4500 | Golden Sand | P4500 Q60 | 5% | 7 | 37 | 56 | 95% |
| 5% Sheerweave 4500 | Granite | P4500 P10 | 5% | 6 | 47 | 47 | 95% |
| 5% Sheerweave 4500 | Linen | P4500 U32 | 5% | 11 | 63 | 26 | 95% |
| 5% Sheerweave 4500 | Pewter | P4500 V07 | 5% | 6 | 30 | 64 | 95% |
| 5% Sheerweave 4500 | Sandstone | P4500 V44 | 5% | 8 | 40 | 52 | 95% |
| 5% Sheerweave 5000 | Aura Sable | R1021 | 5% | 4 | 14 | 82 | 95% |
| 5% Sheerweave 5000 | Aura/Poetry | R10 S84 | 5% | 10 | 24 | 66 | 95% |
| 5% Sheerweave 5000 | Bark/Ash | R1009 | 5% | NA | NA | NA | 95% |
| 5% Sheerweave 5000 | Bark/Pewter | R1010 | 5% | NA | NA | NA | 95% |
| 5% Sheerweave 5000 | Bark/Tiger Oak | R1001 | 5% | 17 | 24 | 59 | 95% |
| 5% Sheerweave 5000 | Chenille/Driftwood | R1007 | 5% | 12 | 26 | 52 | 95% |
| 5% Sheerweave 5000 | Coffee | R10 S82 | 5% | 9 | 11 | 80 | 95% |
| 5% Sheerweave 5000 | Contour Essence | R1017 | 5% | 0 | 0 | 0 | 95% |
| 5% Sheerweave 5000 | Contour Natural | R1016 | 5% | 0 | 0 | 0 | 95% |
| 5% Sheerweave 5000 | Contour Smoke | R1018 | 5% | 0 | 0 | 0 | 95% |
| 5% Sheerweave 5000 | Contour/Smudge | R10 S77 | 5% | 13 | 18 | 69 | 95% |
| 5% Sheerweave 5000 | Linen/Pearl | R1014 | 5% | NA | NA | NA | 95% |
| 5% Sheerweave 5000 | Linen/Taupe | R1015 | 5% | NA | NA | NA | 95% |
| 5% Sheerweave 5000 | Marble/Sand | R10 Q43 | 5% | 9 | 48 | 43 | 95% |
| 5% Sheerweave 5000 | Metro /Platinum | R1019 | 5% | NA | NA | NA | 95% |
| 5% Sheerweave 5000 | Pavestone | R1020 | 5% | 0 | 0 | 0 | 95% |
| 5% Sheerweave 5000 | Tweed/Buckeye | R1003 | 5% | 9 | 28 | 63 | 95% |
| 5% Sheerweave 5000 | Tweed/Oatmeal | R1006 | 5% | 11 | 34 | 55 | 95% |
| 5% Sheerweave 5000 | Twine/Flagstone | R1012 | 5% | 0 | 0 | 0 | 95% |
| 5% Sheerweave 5000 | Twine/Metal | R1013 | 5% | 0 | 0 | 0 | 95% |
| 5% Sheerweave 5000 | Twine/Oatmeal | R1011 | 5% | 0 | 0 | 0 | 95% |
| 5% Sheerweave 5000 | Wicker/Mushroom | R10 Q51 | 5% | 15 | 24 | 61 | 95% |
| 7% Global Screen | Barley | RS14002 | 7% | NA | NA | NA | 93% |
| 7% Global Screen | Canvas | RS14001 | 7% | NA | NA | NA | 93% |
| 7% Global Screen | Platinum | RS14003 | 7% | NA | NA | NA | 93% |
| 7% Sheerweave 5000 | Bamboo White/Wheat | R3409 | 7% | 17 | 55 | 28 | 93% |
| 7% Sheerweave 5000 | Bamboo/Wheat | R34 Q46 | 7% | 19 | 29 | 52 | 93% |
| 7% Sheerweave 5000 | Linen/Clay | R3408 | 7% | NA | NA | NA | 93% |
| 7% Sheerweave 5000 | Twine/Jewel | R34 S73 | 7% | 11 | 34 | 55 | 93% |
| 10% E Screen | Charcoal/Charcoal | R1902 | 10% | 12 | 3 | 85 | 90% |
| 10% E Screen | Charcoal/Cocoa | R1907 | 10% | 11 | 5 | 84 | 90% |
| 10% E Screen | White Pearl | R1908 | 10% | 20 | 50 | 30 | 90% |
| 10% E Screen | White/Linen | R1905 | 10% | 25 | 58 | 17 | 90% |
| 10% E Screen | White/White | R1906 | 10% | 25 | 66 | 9 | 90% |
| 10% Sheerweave 2360 | Beige | P2360 Q20 | 10% | 19 | 44 | 37 | 90% |
| 10% Sheerweave 2360 | Beige/Pearl Gray | P2360 Q21 | 10% | 17 | 39 | 44 | 90% |
| 10% Sheerweave 2360 | Charcoal | P2360 V21 | 10% | 10 | 4 | 86 | 90% |
| 10% Sheerweave 2360 | Charcoal/Alpaca | P2360 V32 | 10% | 12 | 15 | 73 | 90% |
| 10% Sheerweave 2360 | Charcoal/Chestnut | P2360 V24 | 10% | 11 | 5 | 84 | 90% |
| 10% Sheerweave 2360 | Charcoal/Gray | P2360 V22 | 10% | 12 | 8 | 80 | 90% |
| 10% Sheerweave 2360 | Oyster | P2360 P12 | 10% | 27 | 57 | 16 | 90% |
| 10% Sheerweave 2360 | Oyster/Beige | P2360 P13 | 10% | 24 | 51 | 25 | 90% |
| 10% Sheerweave 2360 | Oyster/Pearl Gray | P2360 P14 | 10% | 20 | 45 | 35 | 90% |
| 10% Sheerweave 2360 | Pearl Gray | P2360 V20 | 10% | 16 | 30 | 54 | 90% |
| 10% Sheerweave 4100 | Alabaster | P4100 U59 | 10% | 19 | 56 | 25 | 90% |
| 10% Sheerweave 4100 | Ash | P4100 U64 | 10% | 10 | 10 | 80 | 90% |
| 10% Sheerweave 4100 | Chalk | P4100 U58 | 10% | 18 | 66 | 16 | 90% |
| 10% Sheerweave 4100 | Ebony | P4100 U65 | 10% | 10 | 4 | 86 | 90% |
| 10% Sheerweave 4100 | Granite | P4100 U62 | 10% | 15 | 42 | 43 | 90% |
| 10% Sheerweave 4100 | Greystone | P4100 U61 | 10% | 14 | 35 | 51 | 90% |
| 10% Sheerweave 4100 | Pebblestone | P4100 U60 | 10% | 16 | 48 | 36 | 90% |
| 10% Sheerweave 4100 | Pewter | P4100 U63 | 10% | 12 | 26 | 62 | 90% |
| 10% Sheerweave 4100 | Tobacco | P4100 U66 | 10% | 10 | 5 | 85 | 90% |
| 10% Sheerweave 5000 | Bamboo/Birch | R2603 | 10% | NA | NA | NA | 90% |
| 10% Sheerweave 5000 | Crepe/Toasted Coconut | R26 U16 | 10% | 24 | 40 | 36 | 90% |
| 10% Sheerweave 5000 | Seaglass/Chardonnay | R26 U28 | 10% | 40 | 43 | 17 | 90% |
| 10% Sheerweave 5000 | Seaglass/Crystal | R26 U29 | 10% | 44 | 49 | 7 | 90% |
| 10% Sheerweave 5000 | Seaglass/Silver | R26 U24 | 10% | 33 | 27 | 40 | 90% |

*See **SOLAR OPTICAL INFORMATION** section for detail.

# SOLAR OPTICAL CHART

| Material Name | Color Name | Color # | Openness Factor* | Transmission* | Reflection* | Absorption* | UV Rating* |
|---|---|---|---|---|---|---|---|
| Alexandria | Charcoal | RD403 | Translucent | NA | NA | NA | NA |
| Alexandria | Duck Egg | RD402 | Translucent | NA | NA | NA | NA |
| Alexandria | Oatmeal | RD401 | Translucent | NA | NA | NA | NA |
| Astaire | Grey | RF42004 | Translucent | NA | NA | NA | NA |
| Astaire | Ivory | RF42002 | Translucent | NA | NA | NA | NA |
| Astaire | White | RF42001 | Translucent | NA | NA | NA | NA |
| Avila R Blackout | Canvas | RB703 | Blackout | 0 | 75 | 25 | 99.99% |
| Avila R Blackout | Chalk | RB702 | Blackout | 0 | 65 | 35 | 99.99% |
| Avila R Blackout | Charcoal | RB708 | Blackout | 0 | 40 | 60 | 99.99% |
| Avila R Blackout | Khaki | RB705 | Blackout | 0 | 38 | 62 | 99.99% |
| Avila R Blackout | Linen | RB704 | Blackout | 0 | 59 | 41 | 99.99% |
| Avila R Blackout | Marine | RB706 | Blackout | 0 | 46 | 54 | 99.99% |
| Avila R Blackout | Onyx | RB709 | Blackout | 0 | 4 | 96 | 99.99% |
| Avila R Blackout | Pewter | RB707 | Blackout | 0 | 18 | 82 | 99.99% |
| Avila R Blackout | White | RB701 | Blackout | 0 | 84 | 16 | 99.99% |
| Baroque | Champagne | RD501 | Translucent | NA | NA | NA | NA |
| Baroque | Cyan | RD502 | Translucent | NA | NA | NA | NA |
| Baroque | Ebony | RD504 | Translucent | NA | NA | NA | NA |
| Baroque | Ruby | RD503 | Translucent | NA | NA | NA | NA |
| Blackout - Solid | Alabaster | R4011 | Blackout | NA | NA | NA | 99.99% |
| Blackout - Solid | Bone | R4005 | Blackout | NA | NA | NA | 99.99% |
| Blackout - Solid | Buff | R4008 | Blackout | NA | NA | NA | 99.99% |
| Blackout - Solid | Oyster | R4006 | Blackout | NA | NA | NA | 99.99% |
| Blackout - Solid | White | R4001 | Blackout | NA | NA | NA | 99.99% |
| Brilliance | Birch | RD802 | Translucent | NA | NA | NA | NA |
| Brilliance | Dove Gray | RD804 | Translucent | NA | NA | NA | NA |
| Brilliance | Pearl | RD801 | Translucent | NA | NA | NA | NA |
| Brilliance | Putty | RD803 | Translucent | NA | NA | NA | NA |
| Brilliance | Pyrite | RD805 | Translucent | NA | NA | NA | NA |
| Brilliance | Steel | RD806 | Translucent | NA | NA | NA | NA |
| Brilliance Blackout | Birch | RB602 | Blackout | NA | NA | NA | 99.99% |
| Brilliance Blackout | Dove Gray | RB604 | Blackout | NA | NA | NA | 99.99% |
| Brilliance Blackout | Pearl | RB601 | Blackout | NA | NA | NA | 99.99% |
| Brilliance Blackout | Putty | RB603 | Blackout | NA | NA | NA | 99.99% |
| Brilliance Blackout | Pyrite | RB605 | Blackout | NA | NA | NA | 99.99% |
| Brilliance Blackout | Steel | RB606 | Blackout | NA | NA | NA | 99.99% |
| Carrara | Coal | RD606 | Translucent | NA | NA | NA | NA |
| Carrara | Saddle | RD604 | Translucent | NA | NA | NA | NA |
| Carrara | Silver | RD603 | Translucent | NA | NA | NA | NA |
| Carrara | Storm | RD605 | Translucent | NA | NA | NA | NA |
| Carrara | Tusk | RD602 | Translucent | NA | NA | NA | NA |
| Carrara | White | RD601 | Translucent | NA | NA | NA | NA |
| Carrara Blackout | Coal | RB406 | Blackout | NA | NA | NA | 99.99% |
| Carrara Blackout | Saddle | RB404 | Blackout | NA | NA | NA | 99.99% |
| Carrara Blackout | Silver | RB403 | Blackout | NA | NA | NA | 99.99% |
| Carrara Blackout | Storm | RB405 | Blackout | NA | NA | NA | 99.99% |
| Carrara Blackout | Tusk | RB402 | Blackout | NA | NA | NA | 99.99% |
| Carrara Blackout | White | RB401 | Blackout | NA | NA | NA | 99.99% |
| Claudio | Ash | RD706 | Translucent | NA | NA | NA | NA |
| Claudio | Cloud | RD701 | Translucent | NA | NA | NA | NA |
| Claudio | Cream | RD702 | Translucent | NA | NA | NA | NA |
| Claudio | Gray Matters | RD708 | Translucent | NA | NA | NA | NA |
| Claudio | Mink | RD704 | Translucent | NA | NA | NA | NA |
| Claudio | Mist | RD703 | Translucent | NA | NA | NA | NA |
| Claudio | Reef | RD705 | Translucent | NA | NA | NA | NA |
| Claudio | Sailcloth | RD707 | Translucent | NA | NA | NA | NA |

*See **SOLAR OPTICAL INFORMATION** section for detail.

# SOLAR OPTICAL CHART

| Material Name | Color Name | Color # | Openness Factor* | Transmission* | Reflection* | Absorption* | UV Rating* |
|---|---|---|---|---|---|---|---|
| Claudio Blackout | Ash | RB506 | Blackout | NA | NA | NA | 99.99% |
| Claudio Blackout | Cloud | RB501 | Blackout | NA | NA | NA | 99.99% |
| Claudio Blackout | Cream | RB502 | Blackout | NA | NA | NA | 99.99% |
| Claudio Blackout | Mink | RB504 | Blackout | NA | NA | NA | 99.99% |
| Claudio Blackout | Mist | RB503 | Blackout | NA | NA | NA | 99.99% |
| Claudio Blackout | Reef | RB505 | Blackout | NA | NA | NA | 99.99% |
| Cusco | Chateau | RF6400 | Blackout | NA | NA | NA | 99.99% |
| Cusco | Coconut Husk | RF6401 | Blackout | NA | NA | NA | 99.99% |
| Cusco | Shadow Ridge | RF6402 | Blackout | NA | NA | NA | 99.99% |
| Darien | Bark | RD106 | Translucent | NA | NA | NA | NA |
| Darien | Beige | RD101 | Translucent | NA | NA | NA | NA |
| Darien | Charcoal | RD107 | Translucent | NA | NA | NA | NA |
| Darien | Driftwood | RD103 | Translucent | NA | NA | NA | NA |
| Darien | Mocha | RD104 | Translucent | NA | NA | NA | NA |
| Darien | Sand | RD102 | Translucent | NA | NA | NA | NA |
| Darien | Sea Mist | RD105 | Translucent | NA | NA | NA | NA |
| Drizzle | Flax | RD201 | Translucent | NA | NA | NA | NA |
| Drizzle | Graphite | RD205 | Translucent | NA | NA | NA | NA |
| Drizzle | Hessian | RD202 | Translucent | NA | NA | NA | NA |
| Drizzle | Iron | RD204 | Translucent | NA | NA | NA | NA |
| Drizzle | Tweed | RD203 | Translucent | NA | NA | NA | NA |
| Fiona | Grey | RD303 | Translucent | NA | NA | NA | NA |
| Fiona | Sand | RD301 | Translucent | NA | NA | NA | NA |
| Fiona | Smokey Blue | RD302 | Translucent | NA | NA | NA | NA |
| Flocke Blackout | Chartreux | R9205 | Blackout | 0 | 71 | 29 | 99.99% |
| Flocke Blackout | Crystal | R9204 | Blackout | 0 | 71 | 29 | 99.99% |
| Flocke Blackout | Sea Cliff | R9202 | Blackout | 0 | 71 | 29 | 99.99% |
| Flocke Blackout | Spun Silk | R9203 | Blackout | 0 | 70 | 30 | 99.99% |
| Hayworth | Linen | RF32001 | Translucent | NA | NA | NA | NA |
| Hayworth | White | RF32000 | Translucent | NA | NA | NA | NA |
| Illusion | Dove | RF34003 | Translucent | NA | NA | NA | NA |
| Illusion | Flannel | RF34004 | Translucent | NA | NA | NA | NA |
| Illusion | Ivory | RF34002 | Translucent | NA | NA | NA | NA |
| Illusion | Snow | RF34001 | Translucent | NA | NA | NA | NA |
| Jasper | Country Linen | RF5303 | Translucent | 57 | 12 | 49 | NA |
| Jasper | Heather | RF5302 | Translucent | 52 | 8 | 52 | NA |
| Jasper | Storm Cloud | RF5300 | Translucent | 39 | 3 | 57 | NA |
| Jasper | Tweed | RF5301 | Translucent | 44 | 3 | 55 | NA |
| Linview | Ash | R5613 | Translucent | NA | NA | NA | NA |
| Linview | Cabana Wood | R5603 | Translucent | NA | NA | NA | NA |
| Linview | Fog | R5611 | Translucent | NA | NA | NA | NA |
| Linview | Macadamia | R5606 | Translucent | NA | NA | NA | NA |
| Linview | Midnight Black | R5615 | Translucent | NA | NA | NA | NA |
| Linview | Morning Light | R5602 | Translucent | NA | NA | NA | NA |
| Linview | Navy | R5610 | Translucent | NA | NA | NA | NA |
| Linview | New York Grey | R5614 | Translucent | NA | NA | NA | NA |
| Linview | Pale Lapis | R5609 | Translucent | NA | NA | NA | NA |
| Linview | Porpoise | R5612 | Translucent | NA | NA | NA | NA |
| Linview | Rural Green | R5607 | Translucent | NA | NA | NA | NA |
| Linview | Skyward | R5608 | Translucent | NA | NA | NA | NA |
| Linview | Slate | R5605 | Translucent | NA | NA | NA | NA |
| Linview | Summer White | R5601 | Translucent | NA | NA | NA | NA |
| Linview | Weathered Walnut | R5604 | Translucent | NA | NA | NA | NA |

*See **SOLAR OPTICAL INFORMATION** section for detail.

# SOLAR OPTICAL CHART

| Material Name | Color Name | Color # | Openness Factor* | Transmission* | Reflection* | Absorption* | UV Rating* |
|---|---|---|---|---|---|---|---|
| Linview | Pale Oak | R5617 | Translucent | NA | NA | NA | NA |
| Linview | Sea Smoke | R5616 | Translucent | NA | NA | NA | NA |
| Linview | Soft Linen | R5618 | Translucent | NA | NA | NA | NA |
| Linview Blackout | Alabaster | RB302 | Blackout | NA | NA | NA | 99.99% |
| Linview Blackout | Café Crème | RB303 | Blackout | NA | NA | NA | 99.99% |
| Linview Blackout | Collonade Gray | RB306 | Blackout | NA | NA | NA | 99.99% |
| Linview Blackout | Gauntlet Gray | RB309 | Blackout | NA | NA | NA | 99.99% |
| Linview Blackout | Pale Gray | RB307 | Blackout | NA | NA | NA | 99.99% |
| Linview Blackout | Pale Oak | RB311 | Blackout | NA | NA | NA | 99.99% |
| Linview Blackout | Pure White | RB301 | Blackout | NA | NA | NA | 99.99% |
| Linview Blackout | Sea Smoke | RB310 | Blackout | NA | NA | NA | 99.99% |
| Linview Blackout | Soft Linen | RB312 | Blackout | NA | NA | NA | 99.99% |
| Linview Blackout | Stone | RB304 | Blackout | NA | NA | NA | 99.99% |
| Linview Blackout | Tranquility | RB305 | Blackout | NA | NA | NA | 99.99% |
| Linview Blackout | Whale | RB308 | Blackout | NA | NA | NA | 99.99% |
| Montero | Dark Walnut | RF4200 | Translucent | NA | NA | NA | NA |
| Montero | Java Coast | RF4201 | Translucent | NA | NA | NA | NA |
| Montero | Wicker Basket | RF4202 | Translucent | NA | NA | NA | NA |
| Moravia | Coastal | RF8602 | Translucent | NA | NA | NA | NA |
| Moravia | Countryside | RF8600 | Translucent | NA | NA | NA | NA |
| Moravia | Seabreeze | RF8601 | Translucent | NA | NA | NA | NA |
| Santa Cruz | Bunglehouse Blue | RF3101 | Translucent | NA | NA | NA | NA |
| Santa Cruz | Manchester | RF3100 | Translucent | NA | NA | NA | NA |
| Santa Cruz | Night Sky | RF3106 | Translucent | NA | NA | NA | NA |
| Santa Cruz | Rainforest | RF3107 | Translucent | NA | NA | NA | NA |
| Santa Cruz Blackout | Bunglehouse Blue | RB102 | Blackout | NA | NA | NA | 99.99% |
| Santa Cruz Blackout | Manchester | RB101 | Blackout | NA | NA | NA | 99.99% |
| Santa Cruz Blackout | Night Sky | RB104 | Blackout | NA | NA | NA | 99.99% |
| Santa Cruz Blackout | Rainforest | RB103 | Blackout | NA | NA | NA | 99.99% |
| Scala Blackout | Gray | R10005 | Blackout | NA | NA | NA | 99.99% |
| Scala Blackout | Off White | R10002 | Blackout | NA | NA | NA | 99.99% |
| Scala Blackout | Silver | R10004 | Blackout | NA | NA | NA | 99.99% |
| Scala Blackout | White | R10001 | Blackout | NA | NA | NA | 99.99% |
| Sheerweave 7200R | Blazer | P7200R RB7 | Blackout | 0 | 71 | 29 | 99.99% |
| Sheerweave 7200R | Chiffon | P7200R RB4 | Blackout | 0 | 71 | 29 | 99.99% |
| Sheerweave 7200R | Chrome | P7200R RB5 | Blackout | 0 | 71 | 29 | 99.99% |
| Sheerweave 7200R | Earl Grey | P7200R RB6 | Blackout | 0 | 71 | 29 | 99.99% |
| Sheerweave 7200R | Oyster | P7200R RB2 | Blackout | 0 | 71 | 29 | 99.99% |
| Sheerweave 7200R | Raven | P7200R RB8 | Blackout | 0 | 71 | 29 | 99.99% |
| Sheerweave 7200R | Sail | P7200R RB3 | Blackout | 0 | 71 | 29 | 99.99% |
| Sheerweave 7200R | Swan | P7200R RB1 | Blackout | 0 | 71 | 29 | 99.99% |
| Sheerweave 7250R | Blazer | P7250R RL7 | Translucent | NA | NA | NA | NA |
| Sheerweave 7250R | Chiffon | P7250R RL4 | Translucent | NA | NA | NA | NA |
| Sheerweave 7250R | Chrome | P7250R RL5 | Translucent | NA | NA | NA | NA |
| Sheerweave 7250R | Earl Grey | P7250R RL6 | Translucent | NA | NA | NA | NA |
| Sheerweave 7250R | Oyster | P7250R RL2 | Translucent | NA | NA | NA | NA |
| Sheerweave 7250R | Raven | P7250R RL8 | Translucent | NA | NA | NA | NA |
| Sheerweave 7250R | Sail | P7250R RL3 | Translucent | NA | NA | NA | NA |
| Sheerweave 7250R | Swan | P7250R RL1 | Translucent | NA | NA | NA | NA |
| Sheerweave 7400 | Cotton | P7400 U80 | Blackout | 0 | 64 | 36 | 99.99% |
| Sheerweave 7400 | Flint | P7400 U87 | Blackout | 0 | 64 | 36 | 99.99% |
| Sheerweave 7400 | Parchment | P7400 U81 | Blackout | 0 | 64 | 36 | 99.99% |
| Sheerweave 7400 | Pebble | P7400 U83 | Blackout | 0 | 64 | 36 | 99.99% |
| Sheerweave 7400 | Seagrass | P7400 U84 | Blackout | 0 | 64 | 36 | 99.99% |
| Sheerweave 7400 | Sesame | P7400 U82 | Blackout | 0 | 64 | 36 | 99.99% |
| Sheerweave 7400 | Shale | P7400 U85 | Blackout | 0 | 64 | 36 | 99.99% |
| Sheerweave 7400 | Spice | P7400 U86 | Blackout | 0 | 64 | 36 | 99.99% |
| Sheerweave 7450 | Cotton | P7450 U80 | Translucent | NA | NA | NA | NA |
| Sheerweave 7450 | Flint | P7450 U87 | Translucent | NA | NA | NA | NA |
| Sheerweave 7450 | Parchment | P7450 U81 | Translucent | NA | NA | NA | NA |
| Sheerweave 7450 | Pebble | P7450 U83 | Translucent | NA | NA | NA | NA |
| Sheerweave 7450 | Seagrass | P7450 U84 | Translucent | NA | NA | NA | NA |
| Sheerweave 7450 | Sesame | P7450 U82 | Translucent | NA | NA | NA | NA |
| Sheerweave 7450 | Shale | P7450 U85 | Translucent | NA | NA | NA | NA |
| Sheerweave 7450 | Spice | P7450 U86 | Translucent | NA | NA | NA | NA |

*See **SOLAR OPTICAL INFORMATION** section for detail.

# SOLAR OPTICAL CHART

| Material Name | Color Name | Color # | Openness Factor* | Transmission* | Reflection* | Absorption* | UV Rating* |
|---|---|---|---|---|---|---|---|
| Sheerweave 7500 | Cloud | P7500 R39 | Blackout | 0 | 68 | 32 | 99.99% |
| Sheerweave 7500 | Dune | P7500 R17 | Blackout | 0 | 68 | 32 | 99.99% |
| Sheerweave 7500 | Ice | P7500 R13 | Blackout | 0 | 68 | 32 | 99.99% |
| Sheerweave 7500 | Limestone | P7500 R41 | Blackout | 0 | 68 | 32 | 99.99% |
| Sheerweave 7500 | Midnight | P7500 R22 | Blackout | 0 | 68 | 32 | 99.99% |
| Sheerweave 7500 | Midnightx2 | P7500 R99 | Blackout | 0 | 68 | 32 | 99.99% |
| Sheerweave 7500 | Mist | P7500 R97 | Blackout | 0 | 68 | 32 | 99.99% |
| Sheerweave 7500 | Nimbus | P7500 R42 | Blackout | 0 | 68 | 32 | 99.99% |
| Sheerweave 7500 | Odyssey | P7500 R20 | Blackout | 0 | 68 | 32 | 99.99% |
| Sheerweave 7500 | Orient | P7500 R21 | Blackout | 0 | 68 | 32 | 99.99% |
| Sheerweave 7500 | Orientx2 | P7500 S97 | Blackout | 0 | 68 | 32 | 99.99% |
| Sheerweave 7500 | Porcelain | P7500 R40 | Blackout | 0 | 68 | 32 | 99.99% |
| Sheerweave 7500 | Stone | P7500 R19 | Blackout | 0 | 68 | 32 | 99.99% |
| Sheerweave 7500 | Tundra | P7500 R43 | Blackout | 0 | 68 | 32 | 99.99% |
| Sheerweave 7500R | Cloud | P7500R R45 | Blackout | 0 | 68 | 32 | 99.99% |
| Sheerweave 7500R | Dune | P7500R R51 | Blackout | 0 | 68 | 32 | 99.99% |
| Sheerweave 7500R | Ice | P7500R R44 | Blackout | 0 | 68 | 32 | 99.99% |
| Sheerweave 7500R | Limestone | P7500R R47 | Blackout | 0 | 68 | 32 | 99.99% |
| Sheerweave 7500R | Midnight | P7500R R55 | Blackout | 0 | 68 | 32 | 99.99% |
| Sheerweave 7500R | Mist | P7500R R48 | Blackout | 0 | 68 | 32 | 99.99% |
| Sheerweave 7500R | Nimbus | P7500R R49 | Blackout | 0 | 68 | 32 | 99.99% |
| Sheerweave 7500R | Odyssey | P7500R R53 | Blackout | 0 | 68 | 32 | 99.99% |
| Sheerweave 7500R | Orient | P7500R R54 | Blackout | 0 | 68 | 32 | 99.99% |
| Sheerweave 7500R | Porcelain | P7500R R46 | Blackout | 0 | 68 | 32 | 99.99% |
| Sheerweave 7500R | Stone | P7500R R52 | Blackout | 0 | 68 | 32 | 99.99% |
| Sheerweave 7500R | Tundra | P7500R R50 | Blackout | 0 | 68 | 32 | 99.99% |
| Sheerweave 7600 | Bright White | P7600 U90 | Blackout | 0 | 46 | 54 | 99.99% |
| Sheerweave 7600 | Coal | P7600 U97 | Blackout | 0 | 46 | 54 | 99.99% |
| Sheerweave 7600 | Coffee | P7600 U96 | Blackout | 0 | 46 | 54 | 99.99% |
| Sheerweave 7600 | Dove Grey | P7600 U93 | Blackout | 0 | 46 | 54 | 99.99% |
| Sheerweave 7600 | Ivory | P7600 U99 | Blackout | 0 | 46 | 54 | 99.99% |
| Sheerweave 7600 | Khaki | P7600 U92 | Blackout | 0 | 46 | 54 | 99.99% |
| Sheerweave 7600 | Shell | P7600 U91 | Blackout | 0 | 46 | 54 | 99.99% |
| Sheerweave 7600 | Taupe | P7600 U94 | Blackout | 0 | 46 | 54 | 99.99% |
| Sheerweave 7600 | Thunder | P7600 U95 | Blackout | 0 | 46 | 54 | 99.99% |
| Sheerweave 7650 | Bright White | P7650 U90 | Translucent | NA | NA | NA | NA |
| Sheerweave 7650 | Coal | P7650 U97 | Translucent | NA | NA | NA | NA |
| Sheerweave 7650 | Coffee | P7650 U96 | Translucent | NA | NA | NA | NA |
| Sheerweave 7650 | Dove Grey | P7650 U93 | Translucent | NA | NA | NA | NA |
| Sheerweave 7650 | Ivory | P7650 U99 | Translucent | NA | NA | NA | NA |
| Sheerweave 7650 | Khaki | P7650 U92 | Translucent | NA | NA | NA | NA |
| Sheerweave 7650 | Shell | P7650 U91 | Translucent | NA | NA | NA | NA |
| Sheerweave 7650 | Taupe | P7650 U94 | Translucent | NA | NA | NA | NA |
| Sheerweave 7650 | Thunder | P7650 U95 | Translucent | NA | NA | NA | NA |
| Sheerweave 7700R | Chalk | P7700R TB4 | Blackout | 0 | 59 | 41 | 99.99% |
| Sheerweave 7700R | Concrete | P7700R TB3 | Blackout | 0 | 44 | 56 | 99.99% |
| Sheerweave 7700R | Crystal | P7700R TB1 | Blackout | 0 | 70 | 30 | 99.99% |
| Sheerweave 7700R | Graphite | P7700R TB5 | Blackout | 0 | 44 | 56 | 99.99% |
| Sheerweave 7700R | Onyx | P7700R TB7 | Blackout | 0 | 6 | 94 | 99.99% |
| Sheerweave 7700R | Pewter | P7700R TB6 | Blackout | 0 | 22 | 78 | 99.99% |
| Sheerweave 7700R | Sand | P7700R TB2 | Blackout | 0 | 57 | 43 | 99.99% |
| Sheerweave 7750R | Chalk | P7750R TL4 | Translucent | NA | NA | NA | NA |
| Sheerweave 7750R | Concrete | P7750R TL3 | Translucent | NA | NA | NA | NA |
| Sheerweave 7750R | Crystal | P7750R TL1 | Translucent | NA | NA | NA | NA |
| Sheerweave 7750R | Graphite | P7750R TL5 | Translucent | NA | NA | NA | NA |
| Sheerweave 7750R | Onyx | P7750R TL7 | Translucent | NA | NA | NA | NA |
| Sheerweave 7750R | Pewter | P7750R TL6 | Translucent | NA | NA | NA | NA |
| Sheerweave 7750R | Sand | P7750R TL2 | Translucent | NA | NA | NA | NA |
| Sorrento | Bisque | RF35002 | Translucent | NA | NA | NA | NA |
| Sorrento | Linen | RF35001 | Translucent | NA | NA | NA | NA |
| Sorrento | Stucco | RF35003 | Translucent | NA | NA | NA | NA |

*See **SOLAR OPTICAL INFORMATION** section for detail.

# SOLAR OPTICAL CHART

| Material Name | Color Name | Color # | Openness Factor* | Transmission* | Reflection* | Absorption* | UV Rating* |
|---|---|---|---|---|---|---|---|
| Sunscreen (SW) 7000 | Birch | R1101 | Blackout | 0 | 64 | 36 | 99.99% |
| Sunscreen (SW) 7000 | Canvas | R11 U67 | Blackout | 0 | 64 | 36 | 99.99% |
| Sunscreen (SW) 7000 | Canyon | R11 V41 | Blackout | 0 | 64 | 36 | 99.99% |
| Sunscreen (SW) 7000 | Cocoa | R11 U69 | Blackout | 0 | 64 | 36 | 99.99% |
| Sunscreen (SW) 7000 | Graphite | R1107 | Blackout | 0 | 64 | 36 | 99.99% |
| Sunscreen (SW) 7000 | Mushroom | R1102 | Blackout | 0 | 64 | 36 | 99.99% |
| Sunscreen (SW) 7000 | Onyx | R1103 | Blackout | 0 | 64 | 36 | 99.99% |
| Sunscreen (SW) 7000 | Sand | R1104 | Blackout | 0 | 64 | 36 | 99.99% |
| Sunscreen (SW) 7000 | Wheat | R11 Q57 | Blackout | 0 | 64 | 36 | 99.99% |
| Sunscreen (SW) 7000 | White | R1106 | Blackout | 0 | 64 | 36 | 99.99% |
| Tundra | Antique White | RD9 02 | Translucent | NA | NA | NA | NA |
| Tundra | Dark Gray | RD9 05 | Translucent | NA | NA | NA | NA |
| Tundra | Ice White | RD9 01 | Translucent | NA | NA | NA | NA |
| Tundra | Oxford Jean | RD9 06 | Translucent | NA | NA | NA | NA |
| Tundra | Sand | RD9 03 | Translucent | NA | NA | NA | NA |
| Tundra | Whale | RD9 04 | Translucent | NA | NA | NA | NA |
| Tundra Blackout | Dark Gray | RB8 05 | Blackout | NA | NA | NA | 99.99% |
| Tundra Blackout | Ivory | RB8 02 | Blackout | NA | NA | NA | 99.99% |
| Tundra Blackout | Oxford Jean | RB8 06 | Blackout | NA | NA | NA | 99.99% |
| Tundra Blackout | Sand | RB8 03 | Blackout | NA | NA | NA | 99.99% |
| Tundra Blackout | Whale | RB8 04 | Blackout | NA | NA | NA | 99.99% |
| Tundra Blackout | White | RB8 01 | Blackout | NA | NA | NA | 99.99% |
| Uptown | Sterling | R7902 | Translucent | NA | NA | NA | NA |
| Uptown | Sterling Room Darkening | R7901 | Room Darkening | 75 | 0 | 25 | 99.99% |
| World Textures 1 | Cyprus Coast | R4802 | Translucent | 55 | 40 | 5 | NA |
| World Textures 1 | Medina Mirage | R4803 | Translucent | 55 | 30 | 15 | NA |
| World Textures 1 | Medina Vision | R4806 | Translucent | 55 | 30 | 15 | NA |
| World Textures 1 Blackout | Cypress Formal | R5001 | Blackout | 75 | 0 | 25 | 99.99% |
| World Textures 2 | Oslo Blend | R4902 | Translucent | 55 | 20 | 25 | NA |
| World Textures 2 Blackout | Oslo Terrain | R5004 | Blackout | NA | NA | NA | 99.99% |

*See **SOLAR OPTICAL INFORMATION** section for detail.

# PRODUCT COMPONENTS – SKYLINE CLUTCHES AND BRACKETS

## CLUTCH LIFT CONTINUOUS CONTROL WITH CASSETTE VALANCE OPTION

Large Cassette Valance (Part #SB20-0304-*)
Medium Cassette Valance (Part #CRV100*)
Small Cassette Valance (Part #CRV-*)

SL10 (Part #SL10H01*)
SL15 (Part #SL15H01*)
SL20 (Part #SL20H53*)
SL30 (Part #SL30H53*)
(Specify White or Black)

**Large Cassette Color Key**

CASSETTE
020490-Anodized
050490-Black
080490-Bronze
075490-White
414490-Vanilla

END CAP
050120-Black
089120-Bronze
075120-White
414120-Vanilla
331120-Gray

Skyline Pin End Plug
1 1/8" (Part #SLPEV01*)
1 1/2" (Part #SLPEV53*)
or (Part# SLPEHD53*)
(Specify White or Black)

**Small & Medium Cassette Color Key**

* = W – White
* = V – Vanilla
* = BZ – Bronze
* = BK – Black

**Hardware Color Key**

* = W – White
* = BK – Black

Plastic Chain (Part #RC458*)
* = 661 - White
* = 048 - Black
* = 674 - Vanilla
* = 064 - Bronze

Metal Chain:
(Part #10001) White
(Part #10002) Black
(Part #444904) Nickel
(Part #02059ANTBRASS) Antique Brass
(Part #00296MEDBRASS) Oil Rubbed
(Part #00297STAINSTEL) Stainless Steel

For Plastic Chain:
Clear Bead Stop (not shown)
(Part# RC130000)

Chain Connector (Part #RC469000)

For Metal Chain:
Metal Stop Ball (not shown)
(Part# 00624WHITE)
(Part#00624BLACK)
(Part#00625AB) Antique Brown
(Part#00625MB) Brass
(Part#444906) Nickel

Large End Cap
(Part #SB20-0303-*)

Medium End Cap
(Part #CREC100*)

Small End Cap
(Part #CREC–*)

Bottom Bar End Cap
(Part #RC443250 – Clear)

Tensioner Bracket Mounting Kit
(Part #KIT_1110)

Optional Deluxe Hem Bar Endcaps
(Part #HBEC*) (not shown)

**Hardware Color Key**

* = W – White
* = V – Vanilla
* = A – Silver
* = BZ – Bronze
* = BK – Black

Cord Tensioner
Cover: (Part #RB91-1334-Color)
Base: (Part #RB91-1337-Color)

**Tensioner Color Key**

075000 = White
414000 = Vanilla
473000 = Brown
050000 = Black

Bottom Bar
White (RC444967)
Black (RC444968)

### Internal Cassette Brackets

Medium/Large Cassette
(Part #CRUSLB660)

Small Cassette
(Part #CRUSLB)

### Universal Brackets (without Cassette)

1-1/2" Projection
(Part #SLB660*)

2" Projection
(Part #SLB680R*)

2-7/8" Projection
(Part #SLB690R*)

### Intermediate Brackets
(for pin-end to pin-end shades)

2" Intermediate Bracket
(Part #SLB68OIB)

**Bracket & Cover Color Key**

* = W – White
* = BK – Black

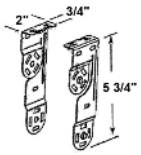


Dual Mounting Bracket
(Part #SLB660DBV*)

### 3" Fascia

Chain Diverter
(SL20 Clutches only)
(Part# SLCDW) White
(Part# SLCDW) Black
(SL10 and SL15 Clutches only)
(Part# SL15DCVRW)
(Part# SL15DCVRBK)

3" brackets
(Part #SLFBKT3*)

3" fascia end cap
(Part #SLSEC*)

### 4" Fascia

4" Fascia End Cap
(Part #RC430*)
* = 785 - White
* = 864 - Bronze
* = 988 - Gray
* = 048 - Black
* = 350 - Vanilla

4" Brackets
(Part #SLFBKT4*)

4" Face Plate
RC430785 - White
RC430048 - Black
RC430864 - Bronze
RC430988 - Gray
RC430350 - Vanilla

**Hardware Color Key**

* = W – White
* = V – Vanilla
* = G – Silver
* = BZ – Bronze
* = BK – Black

Fascia Diverter Chain & Cover in White or Black

Fascia Bracket Clip
(Part #SLFBKTCLP4)

### Bracket Covers

1-1/2" Bracket Cover
(Part# SLBCB* Individual)
(KIT-RS-015)

2" Bracket Cover
(Part #SLBC680*)

2-7/8" Bracket Cover
(Part #SLBC690*)

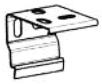

Standard Bracket for
Small Cassette Valance
(KIT-RS-010R 2 PACK)
(KIT-RS-011R 3 PACK)
(Part #VRBKT15 Individual)

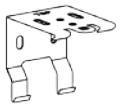

Standard Bracket for
Medium Cassette Valance
(KIT-RS-008R 2 PACK)
(KIT-RS-009R 3 PACK)
(Part #HDBKT2 Individual)

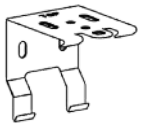

Standard Bracket for
Large Cassette Valance
(KIT-RS-006R 2 PACK)
(KIT-RS-007R 3 PACK)
(Part #V2BKT Individual)

# PRODUCT COMPONENTS – R SERIES CLUTCHES AND BRACKETS

## CLUTCH LIFT CONTINUOUS CONTROL WITH CASSETTE VALANCE OPTION

Large Clutch/End Plug Bracket
(Part #CRUBKT53L)

Small Clutch/End Plug Bracket
(Part #CRUBKT)

Lug

Large Intermediate Bracket
(Part #CRIMBKT53L)

Small Intermediate Bracket
(Part #CRIMBKT)

Large Cassette Valance (Part #SB20-0304-*)
Medium Cassette Valance (Part #CRV100*)
Small Cassette Valance (Part #CRV-*)

1-1/8" Clutch (Part #R8C01-WHITE)
(Part #R8C01BK-BLACK)

1-1/2" Clutch (Part #R16C53-WHITE)
(Part #R16C53BK-BLACK)

| Large Cassette Color Key |
|---|
| CASSETTE<br>020490-Anodized<br>050490-Black<br>080490-Bronze<br>075490-White<br>414490-Vanilla |
| END CAP<br>050120-Black<br>089120-Bronze<br>075120-White<br>414120-Vanilla<br>331120-Gray |

| Small & Medium Cassette Color Key |
|---|
| * = W – White |
| * = V – Vanilla |
| * = BZ – Bronze |
| * = BK – Black |

End plugs with Cassette

1-1/8" End Plug
(Part #CREP01-White)
(Part #CREP01BK-Black)

1-1/2" End Plug
(Part #CREP53V-Vanilla)
(Part #CREP53BK-Black)

End plugs – No Cassette

1-1/8" End Plug (Part #REP01-White)
1-1/8" End plug (Part #REP01BK-Black)

1-1/2" End Plug (Part #REP53-White)
1-1/2" End Plug (Part #REP53BK-Black)

Plastic Chain (Part #RC458*)
* = 661 - White
* = 048 - Black
* = 674 - Vanilla
* = 064 - Bronze

Metal Chain:
(Part #10001) White
(Part #10002) Black
(Part #444904) Nickel
(Part #02059ANTBRASS) Antique Brass
(Part #00296MEDBRASS) Oil Rubbed
(Part #00297STAINSTEL) Stainless Steel

For Plastic Chain:
Clear Bead Stop (not shown)
(Part# RC130000)

Chain Connector (Part #RC469000)

For Metal Chain:
Metal Stop Ball (not shown)
(Part# 00624WHITE)
(Part#00624BLACK)
(Part#00625AB) Antique Brown
(Part#00625MB) Brass

Large End Cap
(Part #SB20-0303-*)

Medium End Cap
(Part #CREC100*)

Small End Cap
(Part #CREC–*)

Bottom Bar End Cap
(Part #RC443250-Clear)

Tensioner Bracket Mounting Kit
(Part #KIT_1110)

Cord Tensioner
Cover: (Part #RB91-1334-Color)
Base: (Part #RB91-1337-Color)

Optional Deluxe Hem Bar Endcaps
(Part #HBEC*) (not shown)

| Hardware Color Key |
|---|
| * = W – White |
| * = V – Vanilla |
| * = A – Silver |
| * = BZ – Bronze |
| * = BK – Black |

| Tensioner Color Key |
|---|
| 075000 = White |
| 414000 = Vanilla |
| 473000 = Brown |
| 050000 = Black |

Bottom Bar
White (RC444967)
Black (RC444968)

Standard Bracket for
1-1/8" Dia. Clutch Roller Loop
(Part #444908)
(KIT-RS-004)

Standard Bracket for
Small Cassette Valance
(KIT-RS-010R 2 PACK)
(KIT-RS-011R 3 PACK)
(Part #VRBKT15 Individual)

Standard Bracket for
1-1/2" Dia. Clutch Roller
(Part #444910)
(KIT-RS-005R)

Standard Bracket for
Medium Cassette
(KIT-RS-008R 2 PACK)
(KIT-RS-009R 3 PACK)
(Part #HDBKT2 Individual)

Standard Bracket for
Large Cassette Valance
(KIT-RS-006R 2 PACK)
(KIT-RS-007R 3 PACK)
(Part #V2BKT Individual)

Extended Projection Bracket
for Clutch Roller
(1-1/8" Part #444909)
(1-1/2" Part #444911)

Note: Intermediate brackets allow for two shades under one continuous cassette valance up to 120"
– **available with the Clutch system.**
Small Intermediate Bracket (Part #CRIMBKT)
Large Intermediate Bracket (Part #CRIMBKT53L)

Note: Spacer block and extension brackets are not available.

3" Fascia Bracket - Flat

OB Cover

| 3" Fascia Brackets | 3" R Series Fascia Plates |
|---|---|
| RC461993-Vanilla (R8) | RC429785-White |
| RC461992-White (R8) | RC429864-Bronze |
| RB362RTNBZ-Bronze (R8) | RC449988 - Gray |
| RC461048-Black (R8) | RC429048 - Black |
| RC461988-Gray (R8) | RC429350- Vanilla |

4" Fascia Bracket - Flat

OB Cover

| 4" Fascia Brackets | 4" Fascia Plate |
|---|---|
| 445048-Bronze (R16) | RC430785-White |
| RC445075-Gray (R16) | RC430048-Black |
| 4450000002-White (R16) | RC430864-Bronze |
| RC479048-Black (R16) | RC430988-Gray |
| 445046-Vanilla (R16) | RC430350-Vanilla |

## Exterior Shade with Cable Guide

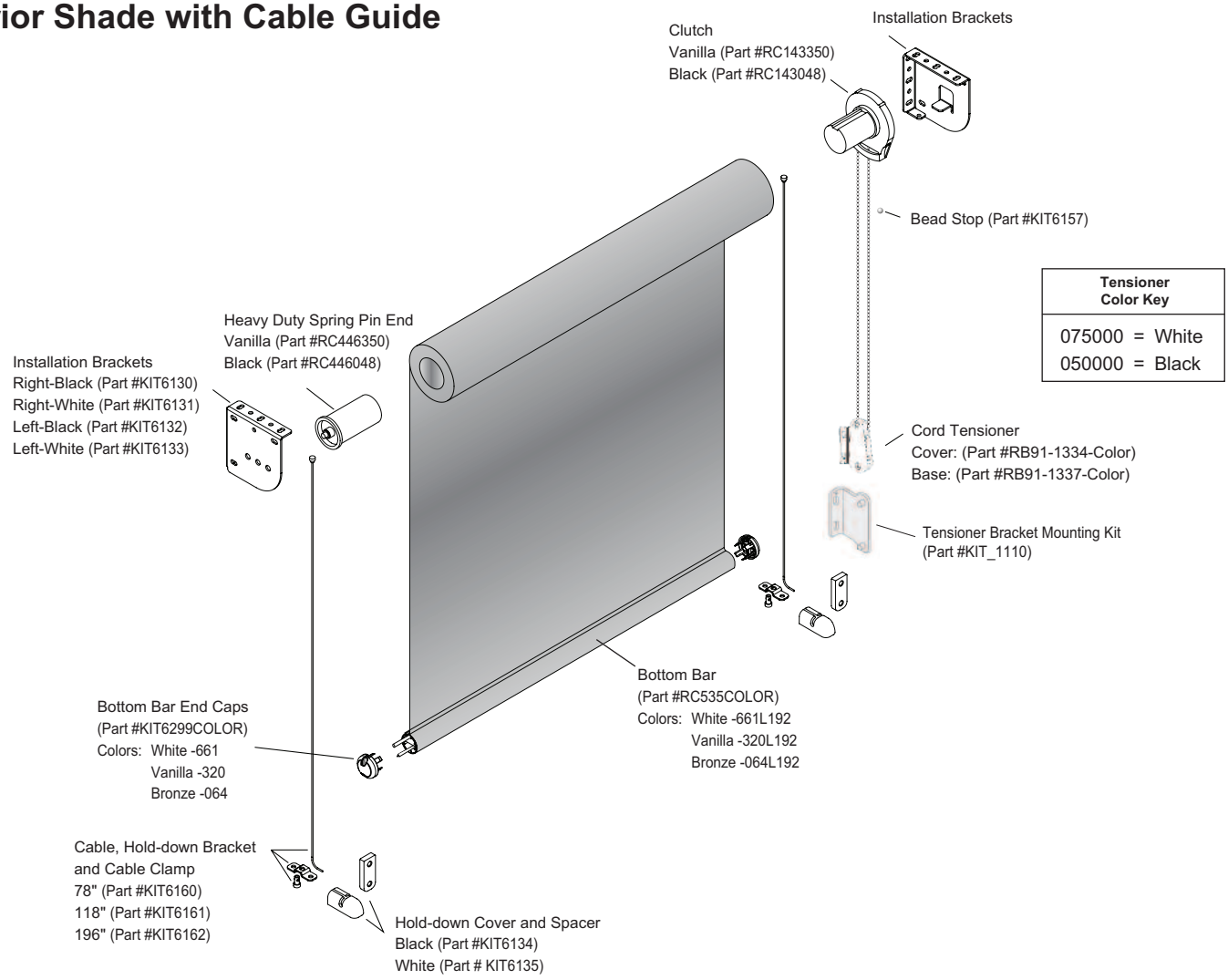


## Exterior Shade with Cable Guide & Optional Cassette

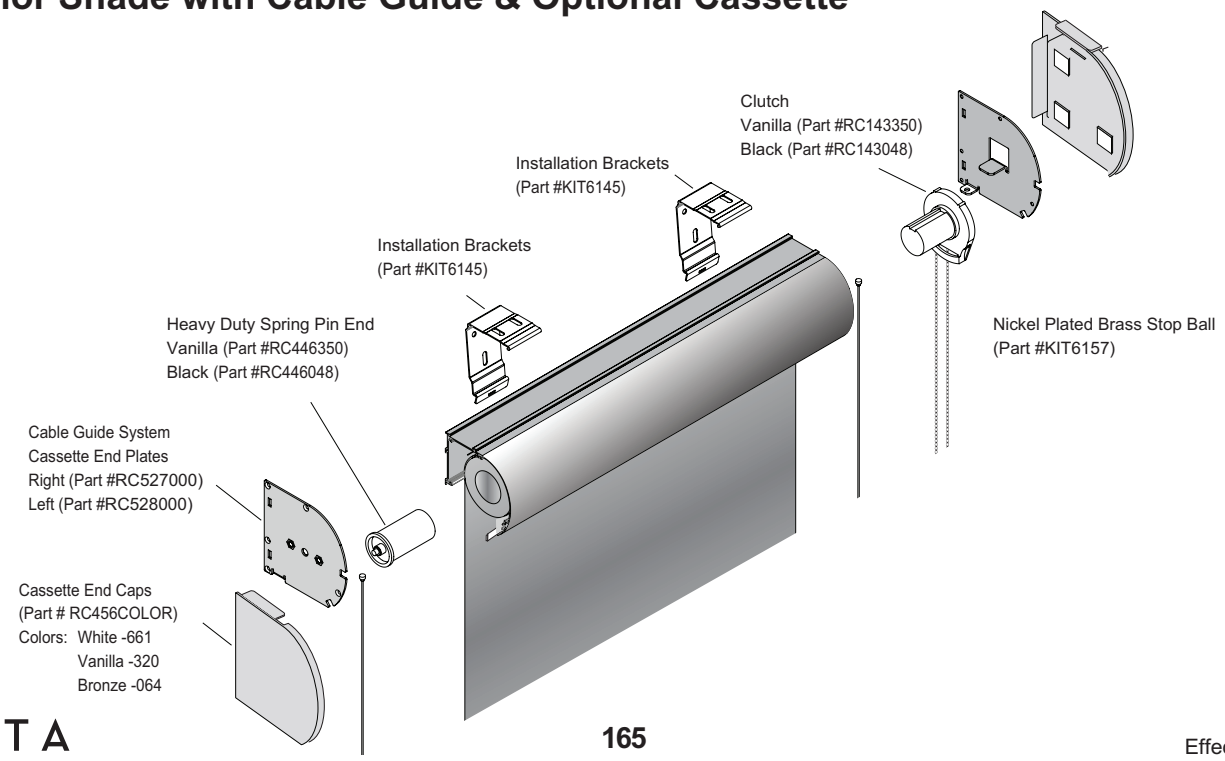

# PRODUCT COMPONENTS – EXTERIOR SHADE WITH CASSETTE & GROMMET

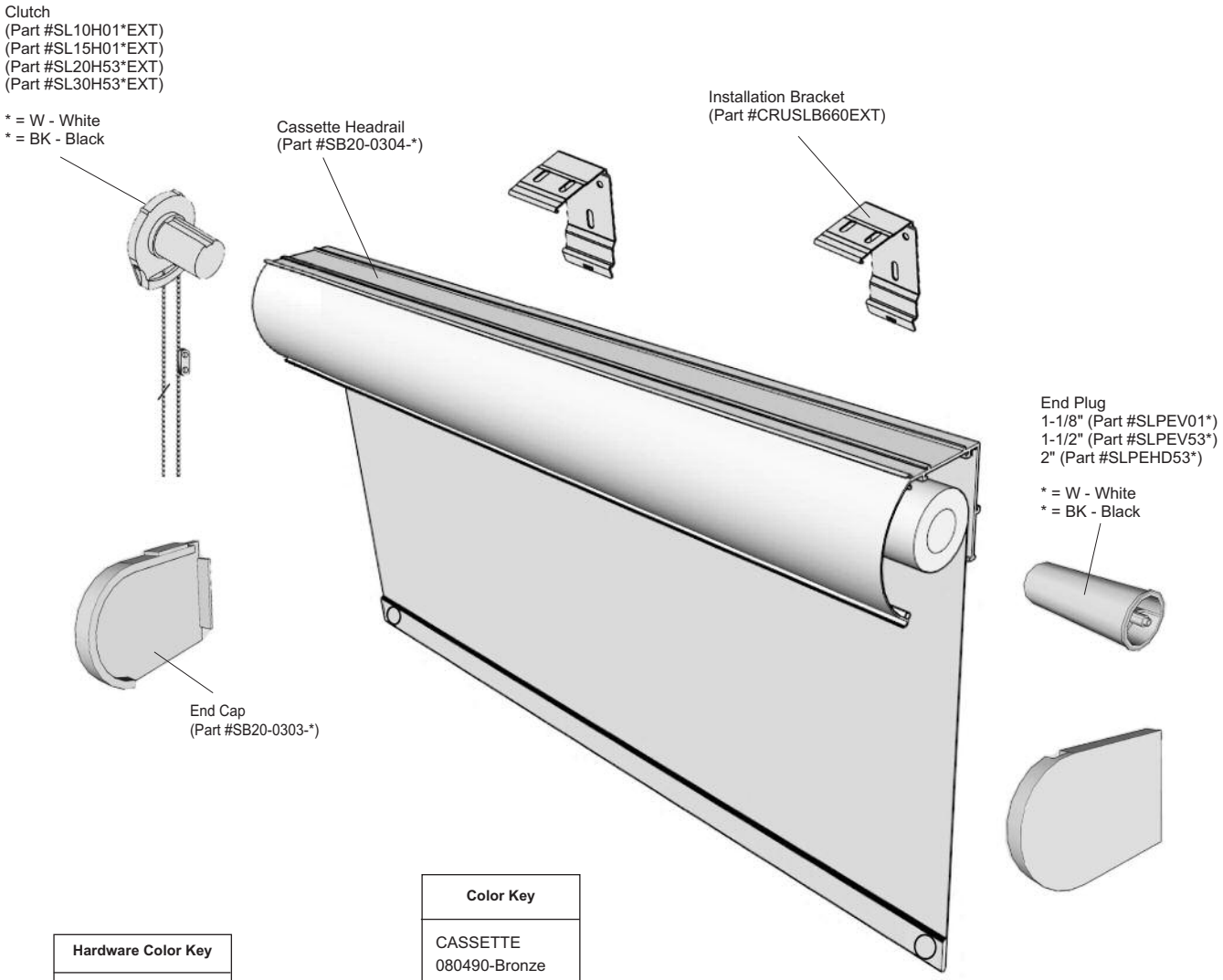


| Hardware Color Key |
|---|
| * = W – White |
| * = BK – Black |
| * = BZ – Bronze |
| * = VA – Vanilla |
| * = SL – Silver |

| Color Key |
|---|
| CASSETTE<br>080490-Bronze<br>075490-White<br>414490-Vanilla |
| END CAP<br>089120-Bronze<br>075120-White<br>414120-Vanilla |

# PRODUCT COMPONENTS – CORDLESS ROLLER SHADE WITH MOUNTING BAR

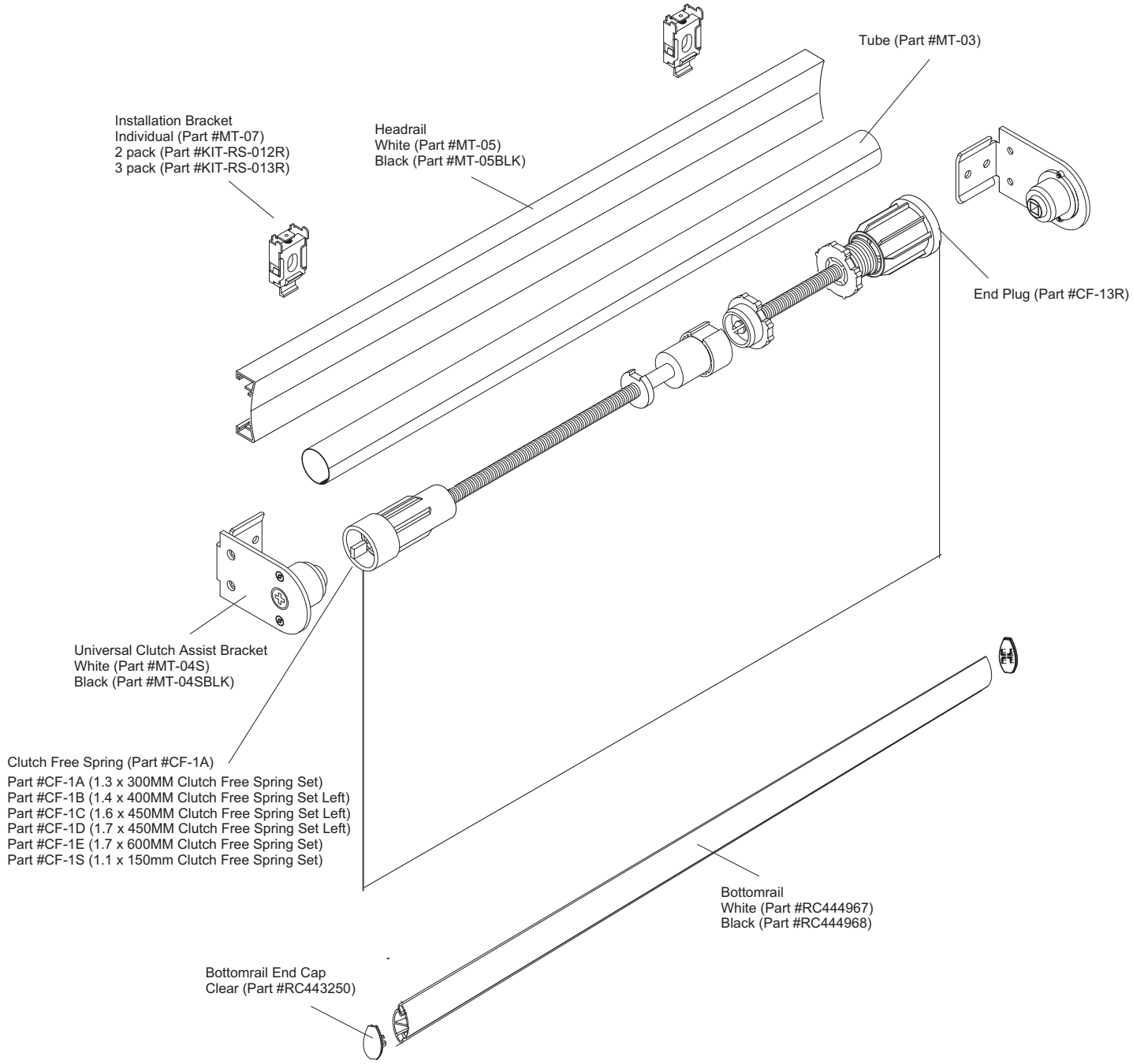

# PRODUCT COMPONENTS – CORDLESS ROLLER SHADE WITH CASSETTE

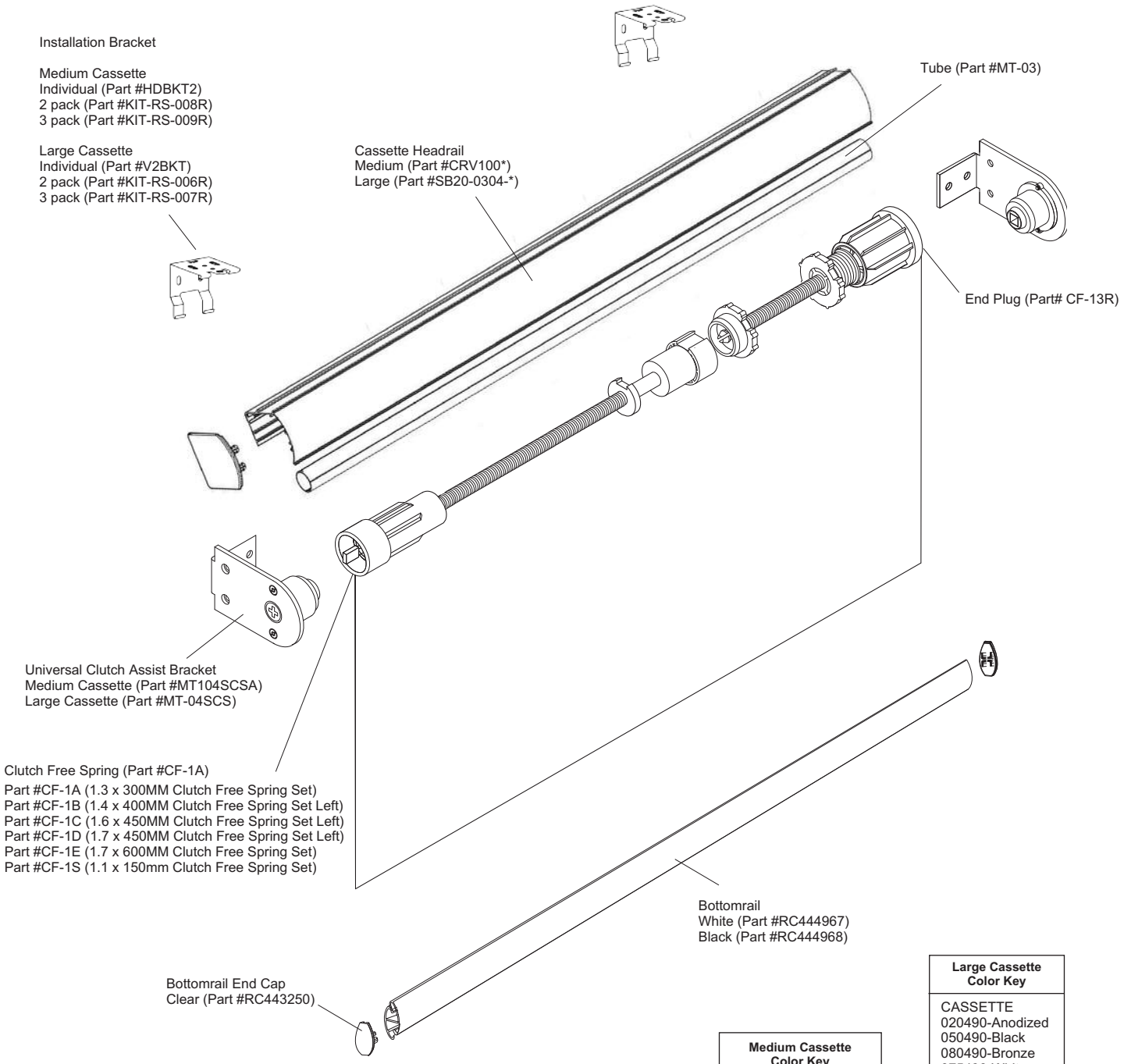


| Medium Cassette Color Key |
|---|
| * = W – White |
| * = BK – Black |
| * = BZ – Bronze |
| * = V – Vanilla |
| * = A – Anodized |

| Large Cassette Color Key |
|---|
| CASSETTE<br>020490-Anodized<br>050490-Black<br>080490-Bronze<br>075490-White<br>414490-Vanilla |
| END CAP<br>050120-Black<br>089120-Bronze<br>075120-White<br>414120-Vanilla<br>331120-Gray |

# PRODUCT COMPONENTS – POWERWAND (NO TOP TREATMENT)

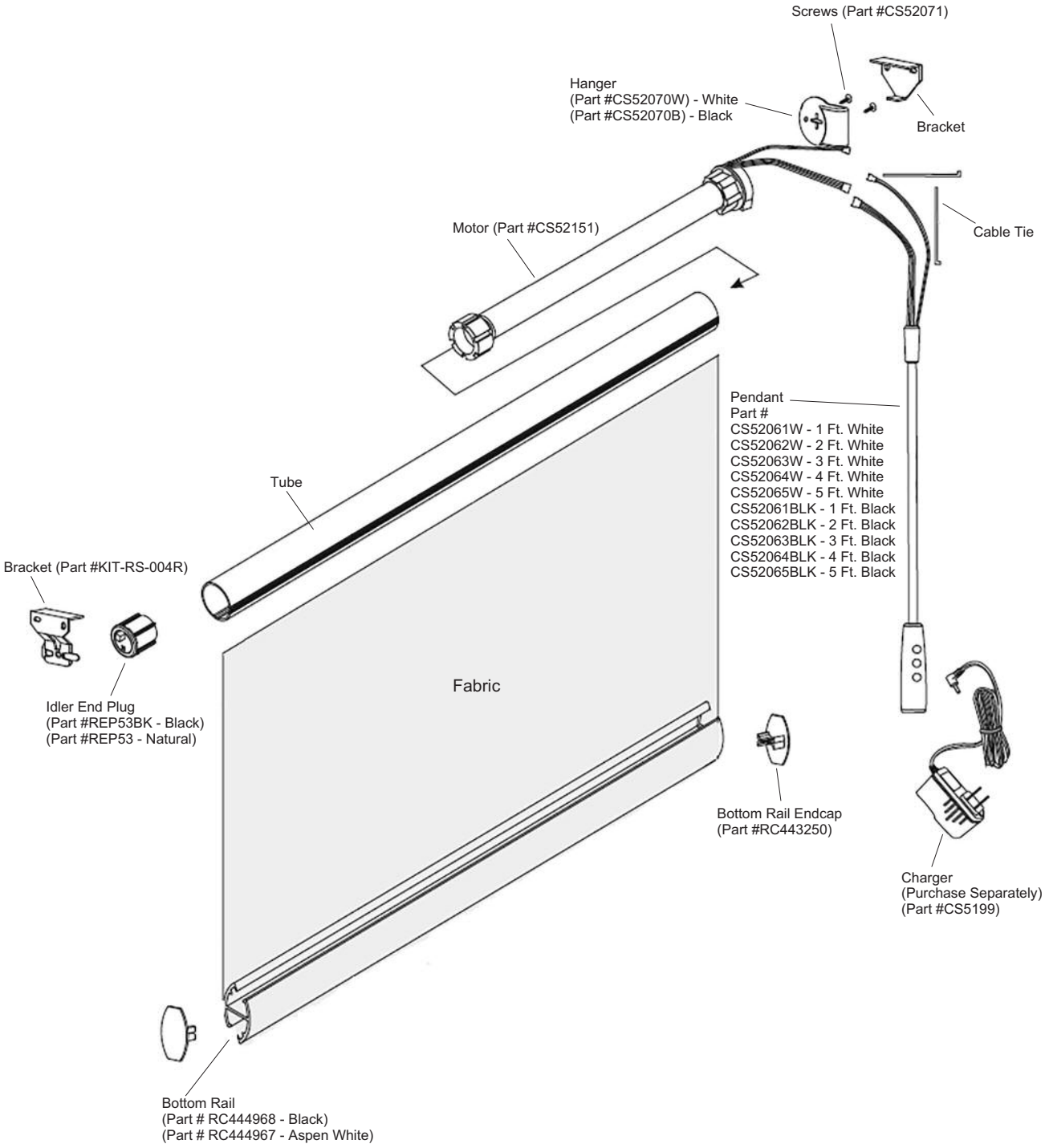

# PRODUCT COMPONENTS – POWERWAND (WITH CASSETTE)

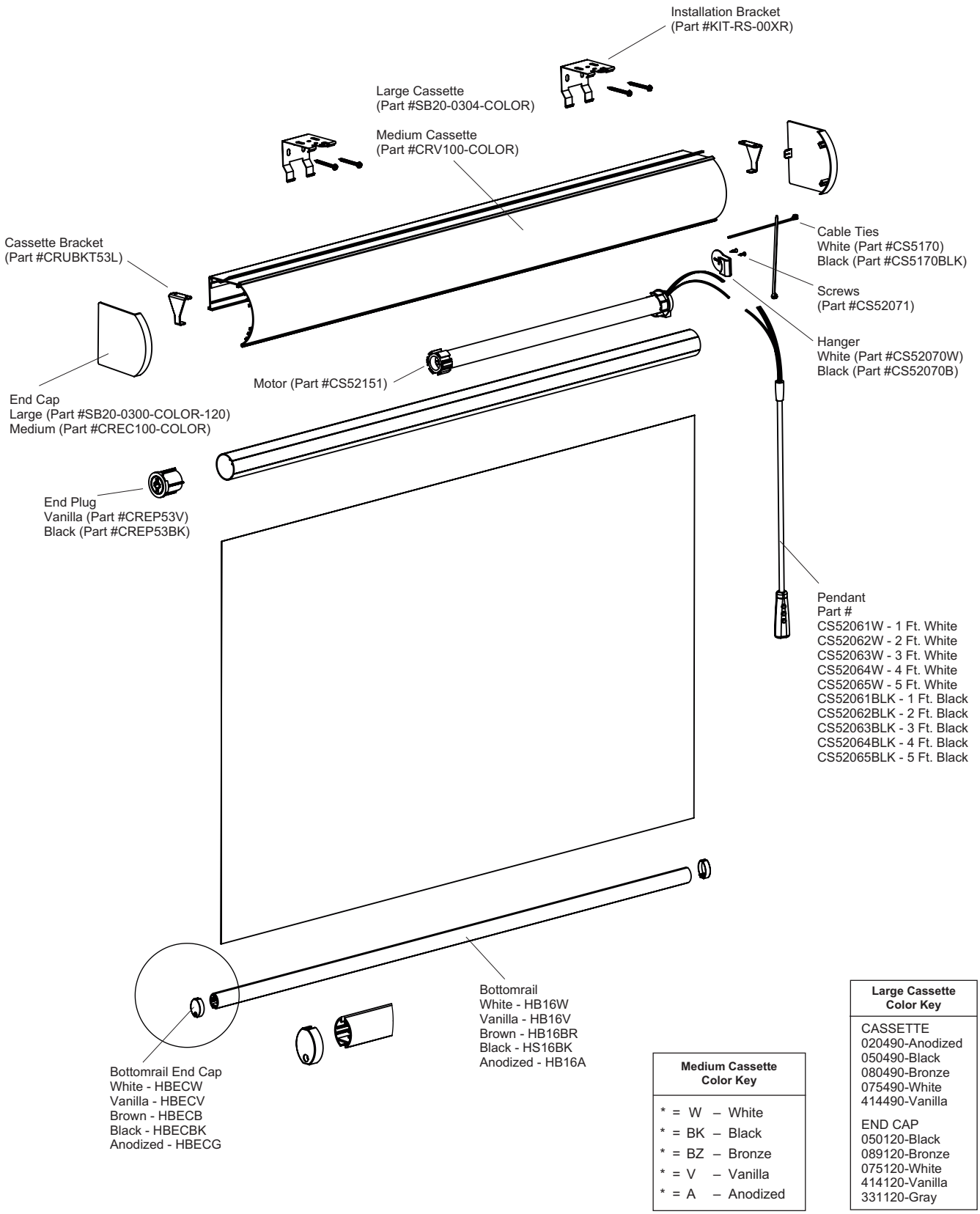


| Medium Cassette Color Key |
|---|
| * = W – White |
| * = BK – Black |
| * = BZ – Bronze |
| * = V – Vanilla |
| * = A – Anodized |

| Large Cassette Color Key |
|---|
| CASSETTE<br>020490-Anodized<br>050490-Black<br>080490-Bronze<br>075490-White<br>414490-Vanilla |
| END CAP<br>050120-Black<br>089120-Bronze<br>075120-White<br>414120-Vanilla<br>331120-Gray |

# PRODUCT COMPONENTS – SIMPLICITY RECHARGEABLE

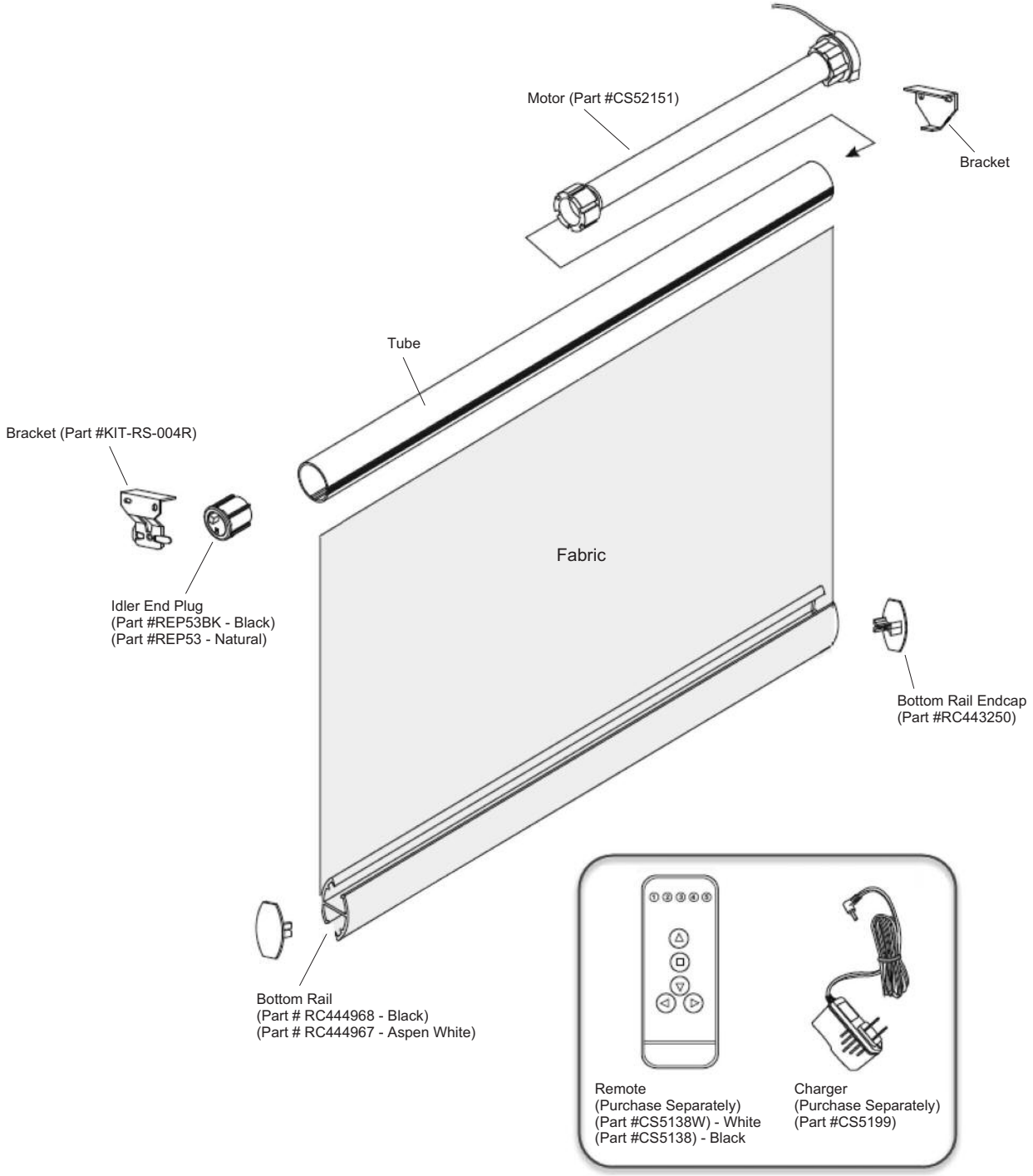

# PRODUCT COMPONENTS – SIMPLICITY RECHARGEABLE (WITH CASSETTE)

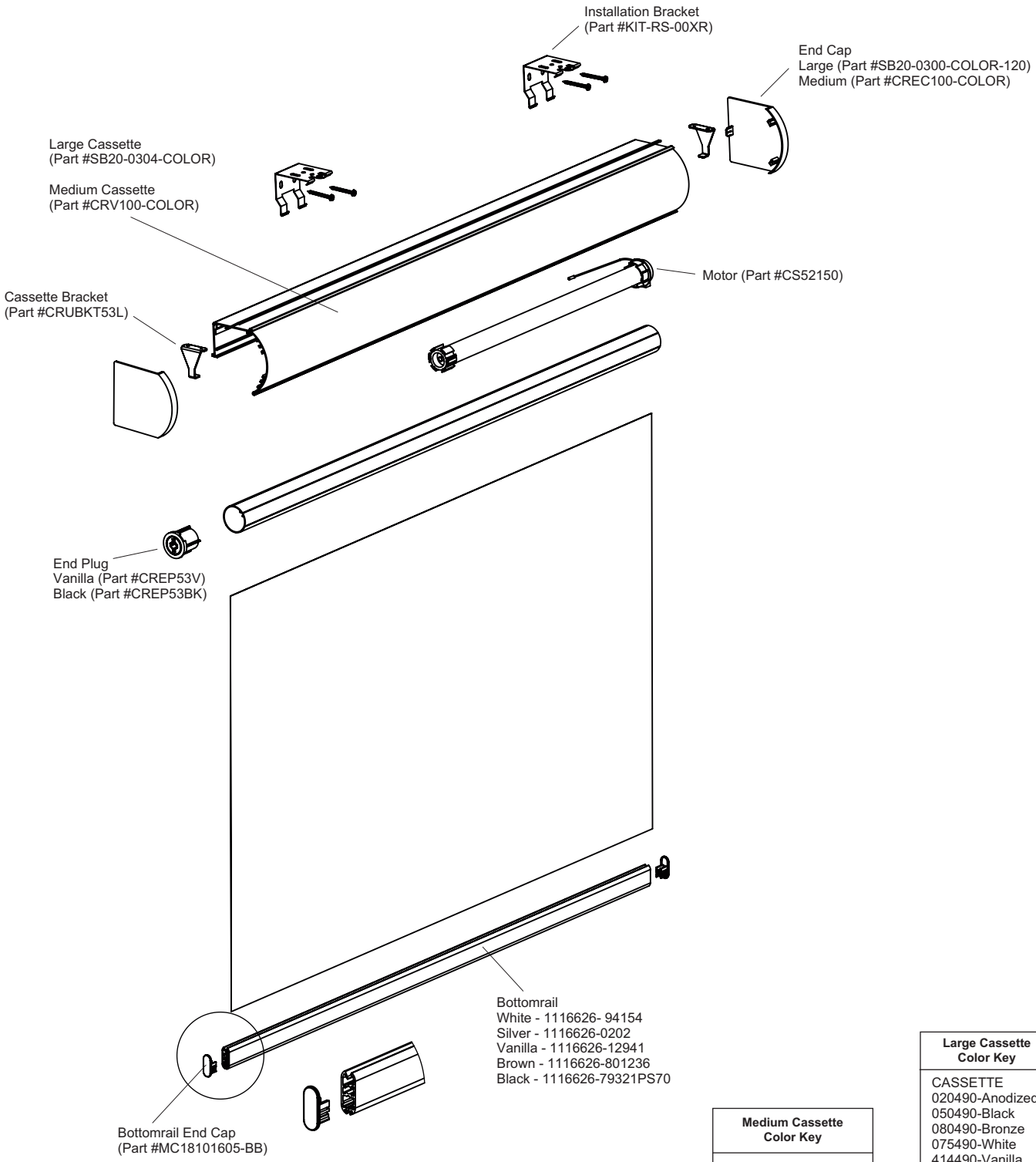


| Medium Cassette Color Key |
|---|
| * = W – White |
| * = BK – Black |
| * = BZ – Bronze |
| * = V – Vanilla |
| * = A – Anodized |

| Large Cassette Color Key |
|---|
| CASSETTE |
| 020490-Anodized |
| 050490-Black |
| 080490-Bronze |
| 075490-White |
| 414490-Vanilla |
| END CAP |
| 050120-Black |
| 089120-Bronze |
| 075120-White |
| 414120-Vanilla |
| 331120-Gray |

# ROLLER SHADE CHARACTERISTICS

All Roller Shades are sent with complete installation instructions. These instructions include information on installing shades properly, child safety device attachments, and shade adjustments. To ensure that all shades operate properly we highly recommend you read these instructions thoroughly and understand them before installing any Roller Shade.

Although we maintain the strictest quality standards and inspect every shade before it leaves our factory, the following characteristics are considered normal and are not manufacturing defects:

- Loose fibers may appear on material edges from time to time. This is normal and does not affect the overall integrity of the shade. Simply trim off the loose fibers with a pair of sharp scissors.
- Material edges may curl inward (hourglass). This is especially noticeable on long narrow shades.
- Screen material is designed to have a clear view-through when viewing directly or on a slight angle. Waviness and distortion is characteristic when viewing from an angle of approximately 30% or more, depending on the pattern.
- Inside mount shades will have light leaks at the top and around outer edges of shades. This is especially noticeable on blackout and room darkening materials.
- Material tube deflection may occur, and a slight V shape may appear in the top and center portion of the shade, especially on shades over 120" wide. This is considered normal, providing that the material does not wrinkle when rolled up onto the tube.
- Please be aware that installing screen shades on windows that feature screens may cause a moire effect.