TUTHILL
Controls Group®

Cablecraft®

ASSEMBLERS

Proudly Building the Best

Linking Motion & Control...

Hand & Foot Controls

Linkage Components & Assemblies

Control Cable Assemblies

Transmission Shift Systems

The Tuthill Solution

Index

Cable Assemblers Catalog

TUTHILL Controls Group ®

Cablecraft®

Cablecraft® Control Cables

- Economical replacement for hydraulic, pneumatic or electric systems.
- The most flexible control cable in the industry.
- Interchangeable with other control cables.

All cable assemblers stock original Cablecraft components for immediate assembly of control cables to meet your requirements. No other mechanical control system offers the versatility in routing or the efficiency and dependability of control cables. They can be used for most situations requiring the remote transfer of linear motion. Among these many applications, Cablecraft control cables are most widely recognized for operation of the following mechanisms:

- Throttles
- Clutches
- Latches
- Hitches
- Chokes
- Shifters
- Valves
- Dumps
- PTOs

Remember to have this information ready whenever possible:

- Diameter (thread size) of the end rods: 10-32, 1/4-28, 5/16-24, 3/8-24?
- Type of conduit caps: Threaded (T) or Grooved (G)? TT, TG, GG combination?
- Travel: How far does the end rod move? (Pages 7-8)
- Overall length of the cable from end-to-end?
- Does it need to push and pull or simply pull only?

It helps to have this additional information:

- What's the application: Throttle, brake, clutch, shift, etc.?
- Load info: How many pounds do you need to move?
- Conditions/environment: Dirt, heat, cold, moisture, etc.?
- Part number: Are there any part numbers on the existing cable?

Time Proven Design

The design of today's Cablecraft® control has evolved from over 50 years experience in meeting a wide variety of industrial, marine and aircraft applications. Combined with careful selection of materials and fabrication methods, this design provides users the most versatile, highest quality control available today.

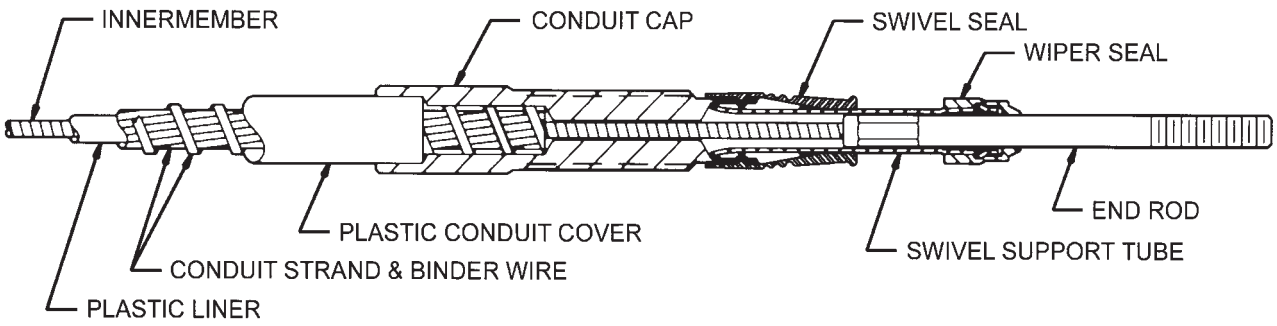

Conduit: First to develop the "binder wire", Cablecraft's superior design out performs the competition's "imitations".

Utility: Gray plastic covering. Used on 173, 174 & 175 series cables.
Low Friction EXT: Green plastic covering. Used on 313, 314, 315, 183, 184 & 185 controls.

Innermember: Made of flexible 1x19 carbon strand, armored with a swaged steel jacket for smoothness and compression strength.

173 — Carbon steel jacket.
174 & 175 — Stainless steel jacket.
313, 314 & 315 — Extruded nylon cover over carbon steel jacket.
183, 184 & 185 — PTFE cover.

Lubrication: All standard Cablecraft controls are lubricated during construction with carefully selected compounds to provide optimum performance. No further service is necessary or recommended.

End Rods: All end rods are 300 series stainless steel burnished to a flawless finish.

Wiper Seals: Designed to prevent entry of moisture and contamination into the support tube and provide a bearing surface for the end rod. Improved Model 5 seals (brown) are standard and Model 6 seals (gray) are optional for severe conditions.

Support Tube and Swivel Seal: The swivel joint between the support tube and conduit cap is designed to allow 8 degrees swivel from control center line.

Plated steel — 173, 313 controls.
Stainless steel — 174, 175, 314, 315, 184 & 185 controls.
The swivel seal protects this joint from entry of moisture and contamination.

Conduit Caps: Threaded for bulkhead installation or grooved for clamp application.

Plated steel — 173, 174, 313, 314, 183 & 184 controls.
Stainless steel — 175, 315 & 185 controls.

Technical/Application Data

Industrial Controls Cautions

The following cautions describe application and installation information

1. Do not install Cablecraft®/Bristow® control cables on any application which may exceed any of the design parameters of the control cable.

2. Cablecraft®/Bristow® control cables are designed and assembled to be non-repairable. Do not attempt to modify this control cable.

3. Cablecraft®/Bristow® control cables are designed to be contaminant resistant: not contaminant proof. Protect the cable from contaminants such as gas, oil, diesel fuel, water, dirt, and chemicals which may damage the control cable.

4. Protect the Cablecraft®/Bristow® control cable from physical damage by paint, kinking, vibration, etc., which may damage the control cable.

5. Cablecraft®/Bristow® control cables have the best load capacity in the pull mode. Always install the control cable so it pulls the greatest load, and pushes the smaller load; and pulls the item into the neutral or off position.

6. Do not install the Cablecraft®/Bristow® control cable with power on or the engine running. Serious injury or death could result.

7. The usable stroke must be centered within the available travel.

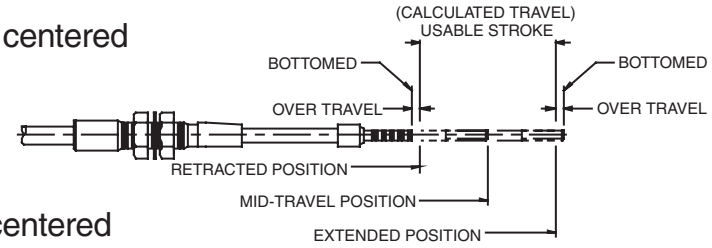

FIG 1

8. The swivel angle must be centered within the available swivel angle.

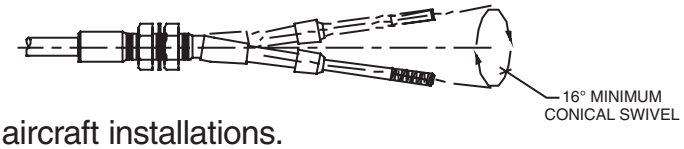

FIG 2

9. This cable is not for use on aircraft installations.

Cable Considerations

There are many factors that affect cable operation and performance.
Please consider the following when planning your cable applications.

Bend Radius: All cables have a minimum bend radius that should not be exceeded (see push-pull cable specifications). Any excessive bends or kinks will prevent the cable from operating properly.

Total Degrees of Bend: As the degrees of bend increase, cable efficiency decreases. Keep the bend radius as large as possible and the degrees of bend to a minimum for optimal performance.

Backlash (lost motion): Motion lost between the input end rod and the output end rod is due to factors such as the amount of clearance between the conduit and innermember, applied loads, degrees of bend, overall length and material characteristics.

Efficiency: The amount of force lost between the input load and the output load is due to factors such as friction, increasing loads, etc. As efficiency decreases, the cable becomes harder to operate.

Length: As length increases, cable efficiency may decrease. Maximum lengths depend on materials, degrees of bend, load, etc.

Loads: All cables have limited load capacities (see push-pull cable specifications). Prudent choice of cable capability/size will enhance life and performance.

Environment: Factors such as temperature, moisture, dirt/contamination can significantly affect cable performance and life. Choose our standard Model 5 wiper seal for normal conditions or Model 6 seal for severe environments.

Warranty:

In short, Cablecraft® Assemblers warrant material, workmanship and conformance (will perform) to catalog specifications for one year from date of manufacture. Contact your local cable assembler to submit a cable for warranty consideration. A copy of Cablecraft's complete warranty statement is available at http://www.tuthillcontrols.com/Terms/terms_sales.asp

CONTACT YOUR LOCAL CABLE ASSEMBLER FOR ADDITIONAL INFORMATION.

Standard Push-Pull Cable Terminology

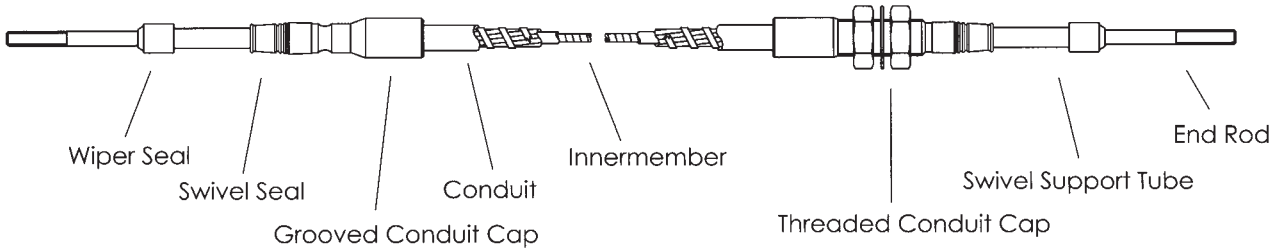

How to Identify Push-Pull Cables

Your goal is to determine the information required to make up the "ordering code" or part number. An example of a typical ordering code is 173-V-TG-3-144.

173 - V - TG - 3 - 144

Step 1: Determine the "**duty**" (size) of the cable by the diameter and threads of the end rods. **V** = 10-32, **L** = 1/4-28, **M** = 5/16-24, **H** = 3/8-24. (**V**ery light duty; **L**ight duty; **M**edium duty; **H**eavy duty)

Step 2: Determine the type of **conduit end** fittings (conduit caps) for left end and right end. **T** = Threaded, **G** = Grooved. TT, GG or TG combinations.

Step 3: Determine the **travel** of the end rod. 1″ through 6″ in one inch increments.

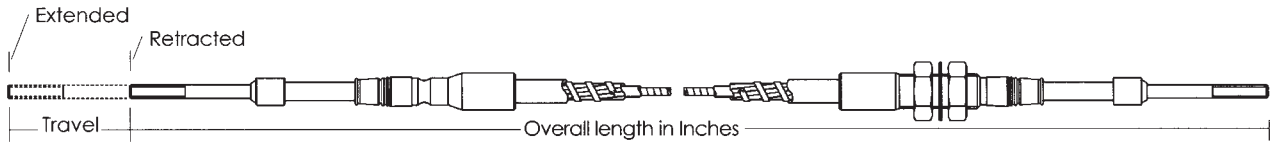

Step 4: Determine the overall **length** of the cable.

Step 5: Determine cable materials depending on usage and conditions. See details of 173, 174, 175 Utility, 313, 314, 315 Low Friction EXT and 183, 184 and 185 Low Friction.

Utility: "The Rugged Gray Cable" is the industry-standard and is designed for a long life under rugged conditions (173, 174, 175).

Low Friction EXT: "The Green Cable" is the proper cable to use when superior efficiency is required. The extruded nylon cover over the innermember works very smoothly with the polyliner (313, 314, 315).

Low Friction: The proper cable to use when superior efficiency is required. The bonded PTFE cover over the inner operating member works very smoothly with the plastic liner.

Push-Pull Identification Chart

Visual Comparison Chart for Determining Travel

To determine the "travel" on an existing cable, you can compare the length of the support tubes with the illustrations below and on the next page.

Determine the "**duty**" (size) of the cable by the diameter and threads of the end rods.
V = 10-32, **L** = 1/4-28, **M** = 5/16-24, **H** = 3/8-24.
(**V**ery light duty; **L**ight duty; **M**edium duty; **H**eavy duty)

Very Light Duty

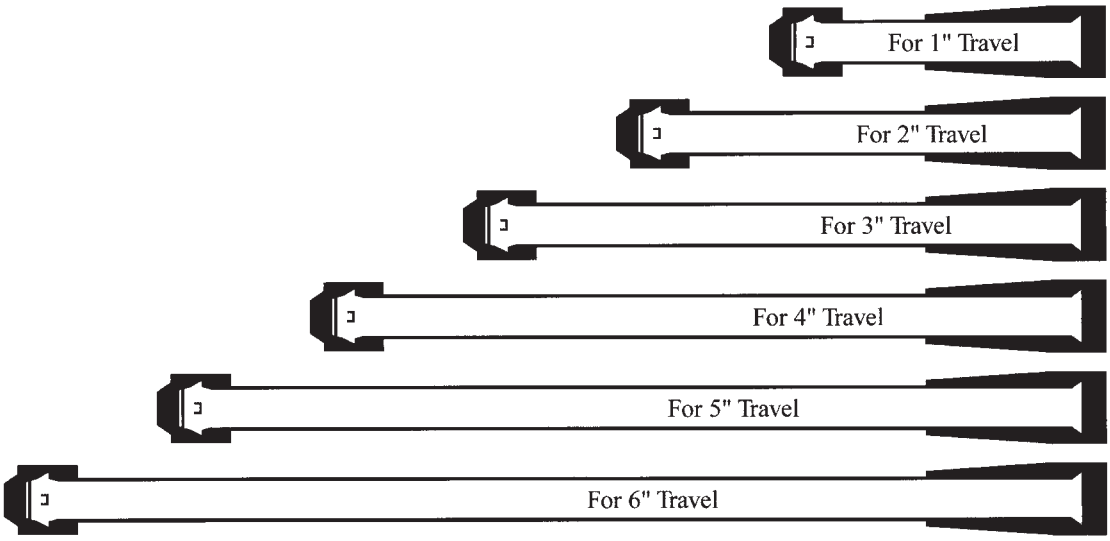

Light Duty

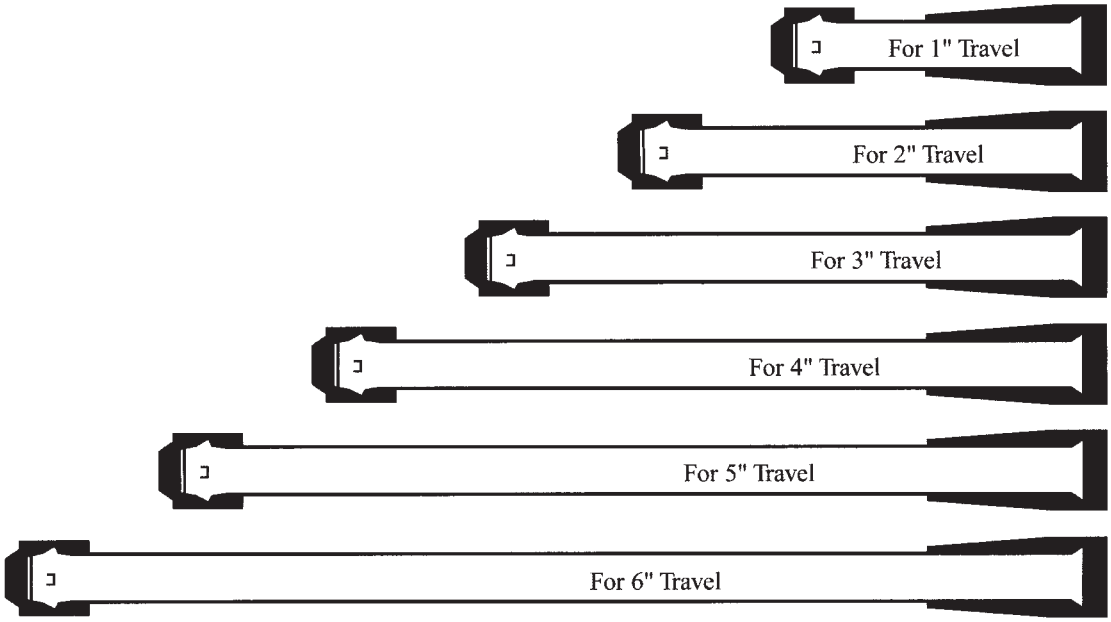

Identification Chart (continued)

Medium Duty

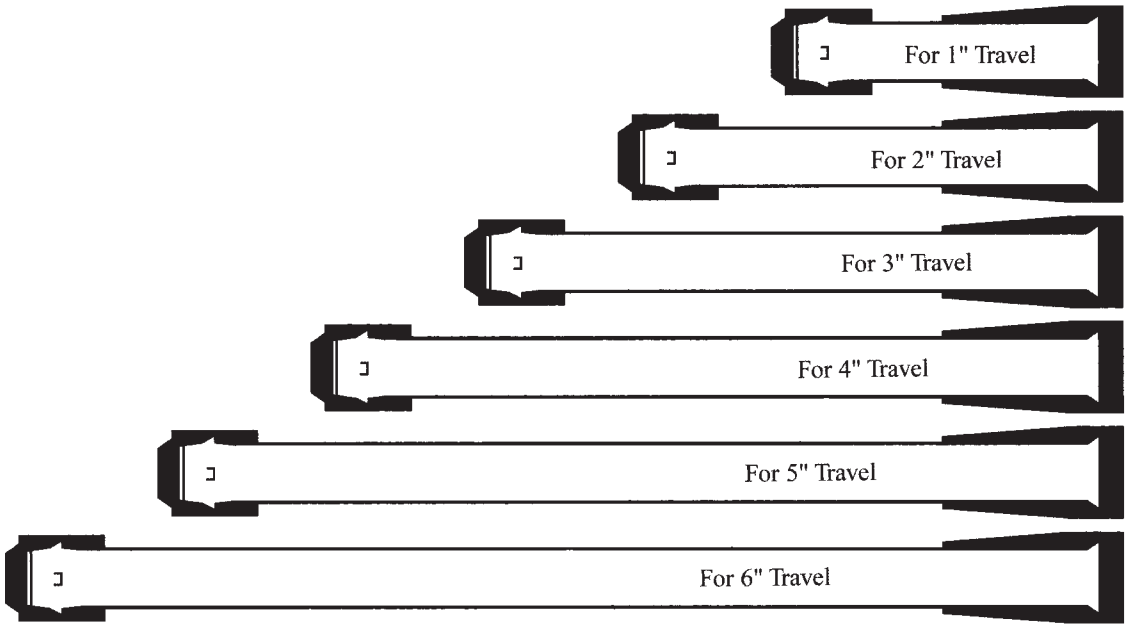

Heavy Duty

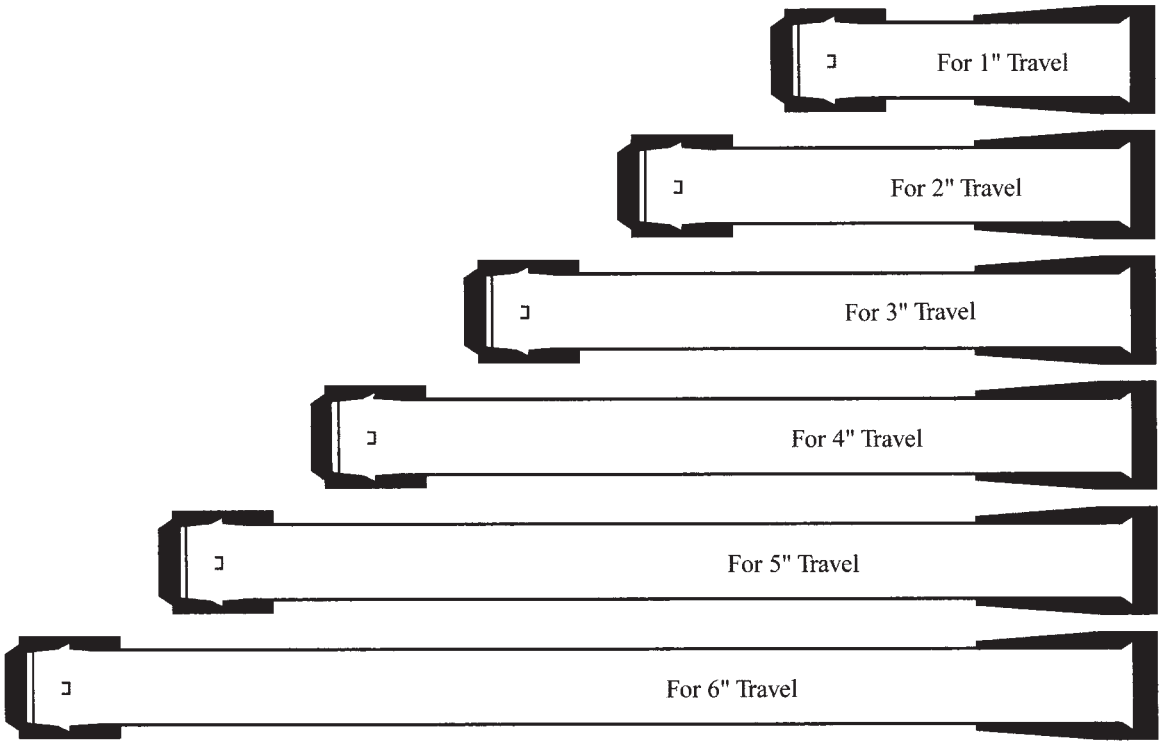

TUTHILL Controls Group

Cablecraft®

Push-Pull Cable Specifications

Threaded Swivel Conduit Fitting	A Dimension Threaded Swivel (in) (control at mid travel)	Minimum Travel Push-Pull (in)	Working Input Load (lbs) Push-Pull	Maximum Input Overload (lbs)	A Dimension Grooved Swivel (in) (control at mid travel)	Grooved Swivel Conduit Fitting
VLD	4.38	1″	80/120	120/180	3.69	
	5.87	2″	80/120	120/180	5.19	
	7.38	3″	70/120	110/180	6.69	
	8.87	4″	60/120	90/180	8.19	
	10.38	5″	45/120	70/180	9.69	
	11.87	6″	30/120	45/180	11.19	
LD	4.62	1″	150/230	230/350	4.00	
	6.12	2″	150/230	230/350	5.50	
	7.62	3″	125/230	190/350	7.00	
	9.12	4″	100/230	150/350	8.50	
	10.62	5″	75/230	110/350	10.00	
	12.12	6″	50/230	75/350	11.50	
MD	5.06	1″	250/400	400/600	4.38	
	6.56	2″	250/400	400/600	5.87	
	8.06	3″	210/400	300/600	7.38	
	9.56	4″	170/400	250/600	8.87	
	11.06	5″	130/400	200/600	10.38	
	12.56	6″	100/400	150/600	11.87	
HD	5.69	1″	700/1000	1000/1500	5.19	
	7.19	2″	700/1000	1000/1500	6.69	
	8.69	3″	600/1000	900/1500	8.19	
	10.19	4″	500/1000	750/1500	9.69	
	11.69	5″	400/1000	600/1500	11.19	
	13.19	6″	300/1000	450/1500	12.69	

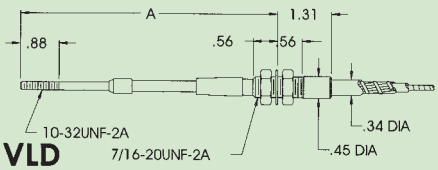

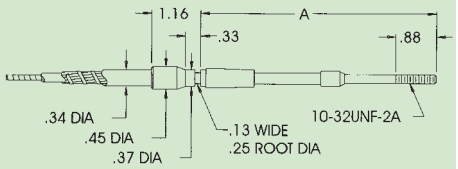

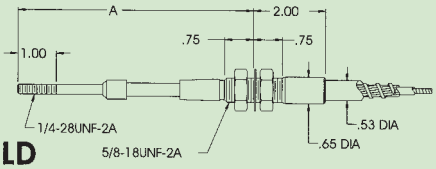

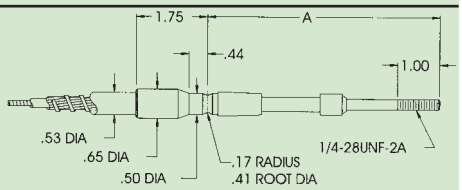

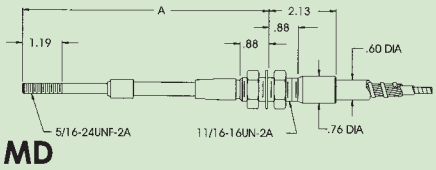

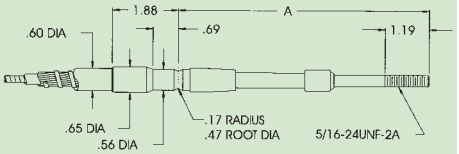

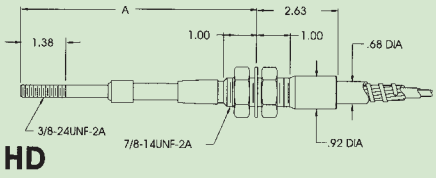

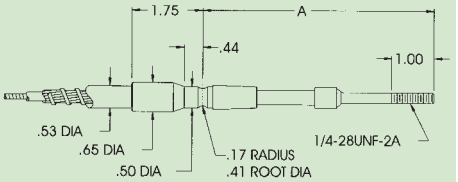

Low Friction-EXT and Utility Cables Design Criteria

Efficiency:
Efficiency factor ratings are for comparative purposes and may vary due to length, rate of travel, direction of travel, bend radius and temperature.

To Compare Efficiency:
Input force = Output load (lbs) x total degrees of bend x efficiency factor + output load.

Efficiency Factors:

Low Friction-EXT	.0012
Utility	.002

Duty	Minimum Bend Radius
VLD	2″
LD	3″
MD	5″
HD	6″

Backlash:
Nominal Backlash = Backlash factor x total degrees of bend.
Backlash Factors:

VLD	.00015	MD	.00025
LD	.00020	HD	.00030

Temperature Range: -65° to +230°F

All line art dimensions are represented in inches

TUTHILL Controls Group ®

Cablecraft®

Push-Pull Standard Order Code

Cablecraft® Ordering Codes

314 - (6) - L - TT - 3 - 144 - (AP)

Control Type

Low Friction-EXT

313	with Stainless Steel End Rods
314	with Stainless Steel Support Tubes and End Rods
315	all Exposed Fittings/Parts are Stainless Steel

Utility

173	with Stainless Steel End Rods
174	with Stainless Steel Support Tubes, End Rods and Innermember Armor
175	all Exposed Fittings/Parts are Stainless Steel plus Stainless Innermember Armor

Low Friction

183	with Stainless Steel End Rods
184	with Stainless Steel Support Tubes and End Rods
185	all Exposed Fittings/Parts are Stainless Steel

Seal Options

6	(Use this number only if requesting optional Model 6 wiper seal, optional on all controls)

Cable Size

Letter	End Rod Thread
V	10-32 UNF
L	1/4-28 UNF
M	5/16-24 UNF
H	3/8-24 UNF

End Fitting Combinations (Options: GG, TG, TT)

T	Threaded Swivel
G	Grooved Swivel

Cable Travel: 1, 2, 3, 4, 5, 6 (inches)

Length +/-.25 (inches)

Suffix Letters for Additional Features

(Use only if requesting optional features)

N	End Rod Jam Nuts (2 each)
W	Extra Shakeproof Washers on Conduit Ends
A	Combination of N and W
P	Stamp with Customer Part Number
S	Stamp with Cablecraft and Customer Part Number
M	Metric End Rods (optional)
V	M5 x .8
L	M6 x 1.0
M	M8 x 1.25
H	M10 x 1.5

Control Head Cable Specifications

Micro Adjust

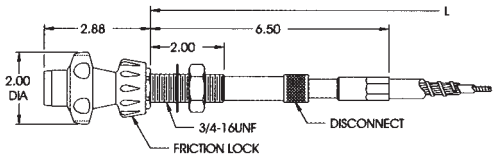

Twist Lock

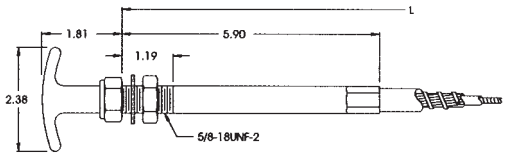

Non Lock

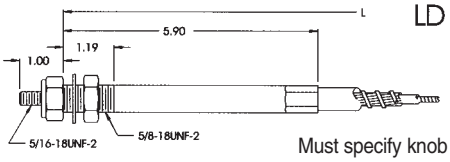

Must specify knob - page 14

Non Lock

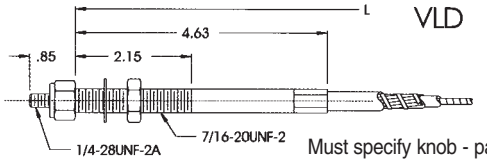

Must specify knob - page 14

		Extended Dimensions	Non Lock VLD	Non Lock LD	Twist Lock	Micro Adjust	
VLD	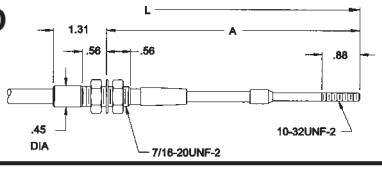	Travel "A"	81V32		51V32	21V32DF	EXT
		1″ 4.94″	81V42		51V42	21V42DF	
		2″ 6.94″	86V32		56V32	26V32DF	UTL
		3″ 8.94″	86V42		56V42	26V42DF	
VLD	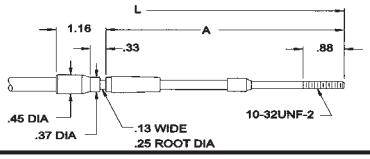	Travel "A"	81V33		51V33	21V33DF	EXT
		1″ 4.25″	81V43		51V43	21V43DF	
		2″ 6.25″	86V33		56V33	26V33DF	UTL
		3″ 8.25″	86V43		56V43	26V43DF	
LD	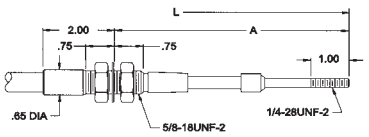	Travel "A"		91L32	51L32	21L32DF	EXT
		1″ 5.18″		91L42	51L42	21L42DF	
		2″ 7.18″		96L32	56L32	26L32DF	UTL
		3″ 9.18″		96L42	56L42	26L43DF	
LD	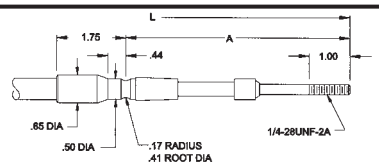	Travel "A"		91L33	51L33	21L33DF	EXT
		1″ 4.56″		91L43	51L43	21L43DF	
		2″ 6.56″		96L33	56L33	26L33DF	UTL
		3″ 8.56″		96L43	56L43	26L43DF	
VLD			CA215		CA217	CA219	UTL
LD	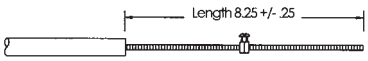			CA216	CA218	CA220	UTL

TUTHILL Controls Group ®

Cablecraft®

Control Head Cable Order Code

Cablecraft® Ordering Codes

2 - 1 - L - 3 - 2 - DF - (6) - 3 - 120 /

Control Head Type
2 = Micro Adjust
5 = Twist Lock with 2.38″ Plastic Handle
6 = Twist Lock with 3.5″ Metal Handle
7 = Non-Locking with 3/8″-24 UNF Mounting
8 = Non-Locking with 7/16″-20 UNF Mounting
9 = Non-Locking with 5/8″-18 UNF Mounting

Cable Type
1 = Low Friction-EXT
6 = Utility

Cable Size
V = Very Light Duty
L = Light Duty

Stainless Steel Options
0 = Carbon Steel Fittings
3 = with Stainless Steel End Rod
4 = with Stainless Steel End Rod, Support Tube and Innermember Armor

Output End Fittings
2 = Threaded Swivel
3 = Grooved Swivel

Micro Adjust only Cable Options
D = Disconnect Feature
F = Friction Lock Accessory

Seal Options (Use this number only if requesting optional seals)
5 = Improved Model 5 Wiper Seal is Standard on Low Friction-EXT & Utility
6 = Model 6 Wiper Seal, Optional on All Controls

Cable Travel — 1″- 3″ (For Output Fittings Style 2 & 3 Only)

Overall Length — (See overall length dimension points indicated on each illustration)

Knob Option — (For Control Head Types 7, 8 and 9, see page 14 for handle options)

Control Heads Commercial

Factory assembled, trim-to-length, with stainless steel solid wire innermember.
Up to 3″ travel, 5″ minimum bend radius and 20 lb pull load rating.

Micro Adjust
Part No. 29V00-L (without Friction Lock)
Part No. 29V000F-L (with Friction Lock)

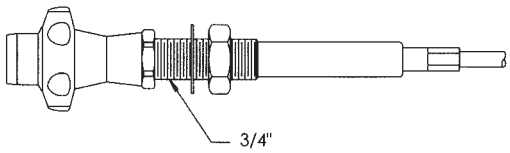

Twist Lock
Part No. 59V00-L

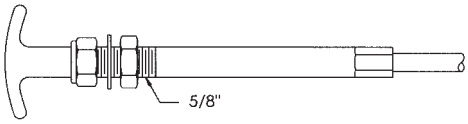

Non Lock (shown with 306 knob)
Part No. 79V00-L

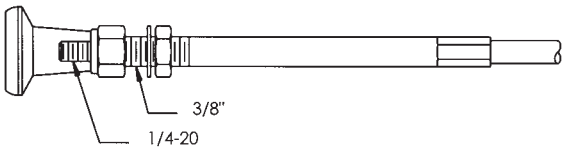

Twist-On Conduit Ends
(Standard for Control Heads on left)
Part No. 161-775 (3/8″ Dia.)

Optional for Control Heads on left
3/8-24 UNF, Part No. 161-581

Optional for Control Heads on left
3/8″ Dia., Part No. 161-579

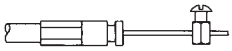

Friction Lock Kit
Part No. 165-510-215

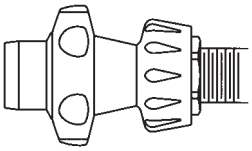

For part number 29V00. Includes adjustment ring and compression washer.

Truck Throttle Control
Part No. 286-009-L ("L" = Length)

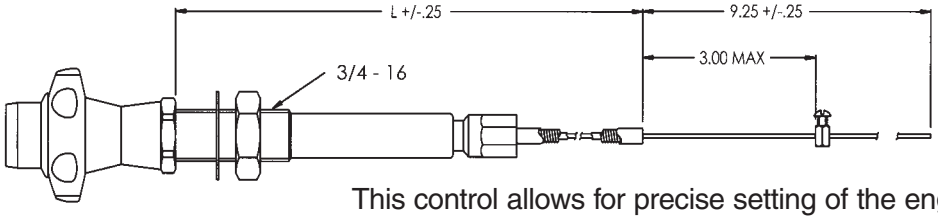

This control allows for precise setting of the engine RPM when the PTO is engaged or as a manual control of the idle position during engine warm up (Friction Lock optional).

Non-Locking, Non-Rotating Control Head
Part No. 165-437-L Black Knob ("L" = Length), Part No. 165-438-L Black T-Handle ("L" = Length)

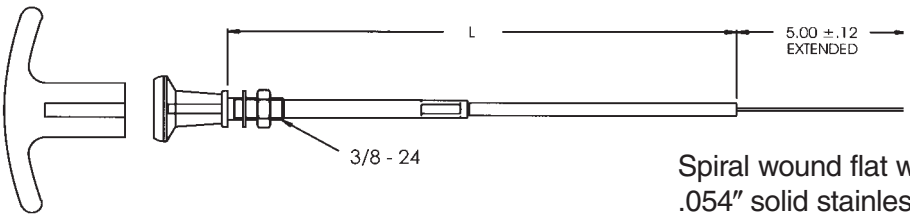

Spiral wound flat wire conduit
.054″ solid stainless innermember

TUTHILL Controls Group®

Cablecraft®

Control Heads PTO Cables

Standard Replacement PTO Control Cable Part No. 872-507-L

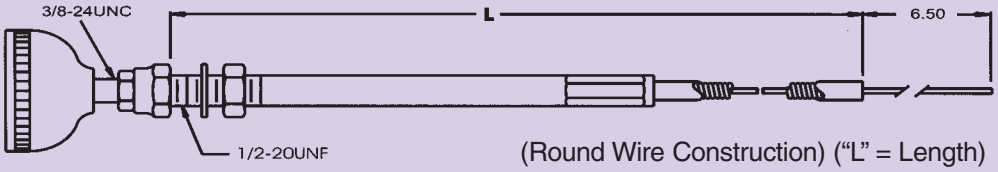

(Round Wire Construction) ("L" = Length)

The quality replacement cable for power take-off control that equals or surpasses original equipment standards. Adaptable to mounting brackets of Muncie®, Chelsea® and similar cable-actuated PTOs.

PTO Cable Attachment Kit (For use with non lock control head)

Cable and handle sold separately.

Attach your custom-built cable to Chelsea® or similar PTO units with the same mounting pattern that have a 3 inch hole-center to hole-center lever arm.

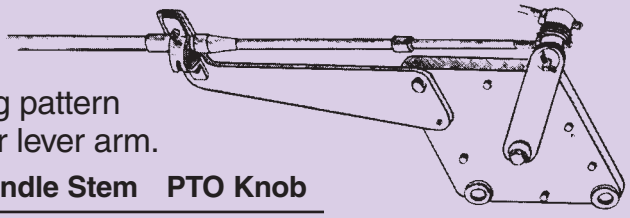

Attachment Kit	Cable Size	Cable P/N	Handle Stem	PTO Knob
175-600-004	VLD	86V33-3-Length	1/4-28	165-183-001
175-600-005	LD	96L33-3-Length	5/16-18	165-183-003

Optional Knobs for Non Lock Control Heads

Part numbers shown below are of reinforced black nylon. Specify knob in part number for all non-locking controls (included in price).

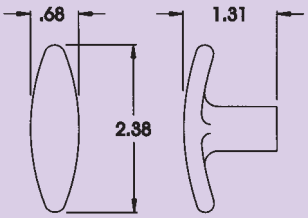

Part Number

Inscription	Thread Size 1/4-20	1/4-28	5/16-18
None	005	014	013
STOP	015	016	017
SHUTOFF	002	008	018
THROTTLE	019	020	021
CHOKE	022	023	024
OPEN	025	026	027
CLOSE	028	029	030
EMER. STOP	031	032	033

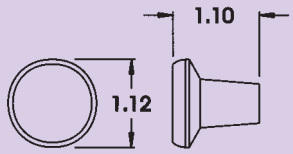

Inscription	1/4-20	1/4-28
None	306	308
STOP	317	314
SHUTOFF	318	319
THROTTLE	320	321
CHOKE	309	322
OPEN	323	324
CLOSE	325	326
EMER. STOP		328

Cast aluminum oversize T-handle (not included in price).

Part Number

Inscription	Thread Size 1/4-20	1/4-28	5/16-18
None	201	202	203

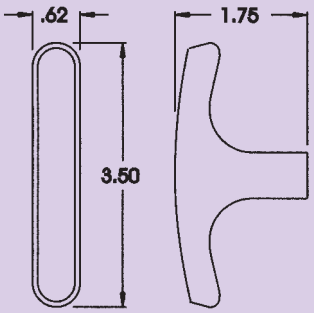

Not Shown: Same handle for Twist Lock Control Head
Handle 300-057-008
Set Screw 175-405-144

TUTHILL Controls Group®

Cablecraft®

Pull-Only Brake Cables

Custom Parking Brake (Pull-Only) Cables

Your local cable assembler can create a pull-only cable control for applications such as parking brakes, clutch cables, and other similar applications. 1500 lb and 3000 lb series cables available. Choose from conduit caps and end fittings shown here to replace or customize your pull-only cable controls.

Cablecraft® has developed a seal system that greatly extends the life of these pull-only control cables. Conduit caps contain a wiper seal to provide maximum protection against the entry of dirt and moisture into the interior of the cable. The innermember is nylon covered, high-tensile galvanized steel strand. The smooth surface of the innermember and the conduit cap seals are the key to extending cable life and efficiency.

The conduit has a plastic liner to provide additional environmental protection. Cablecraft pull-only cables are lubricated during assembly, and because of their design, no further lubrication is required or recommended for the life of the control. Outstanding efficiency is the result of many features incorporated into the Cablecraft design, even after being operated in excess of 250,000 cycles in simulated working conditions.

Control Selection

For proper application of Cablecraft pull-only cable controls, the pull input load should be determined as follows:

1. Measure the output load to be operated.
2. Estimate the total number of degrees of bend in the control installation. Note: bend radius is not significant as long as it is equal or larger than the minimum recommended.
3. Calculate the required pull input load using an efficient factor obtained from Table 1 and the following equation: Input load = output load x efficiency factor.
4. Determine cable size. Individual cable drawings indicate ultimate loads. Allowing a 4-1 safety factor will provide a reliable application and will extend cable life.

Table 1

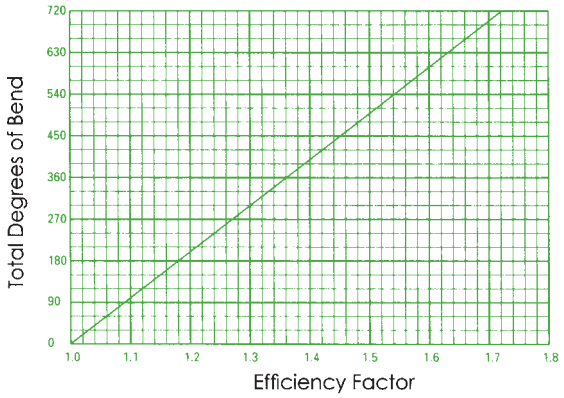

Example Control Selection

1. Maximum output load to be operated = 380 lbs
2. Estimated total degrees of bend = 270°F
3. Calculate required pull input load using Table 1.
   Input load = output load x efficiency factor
   380 lbs x 1.27 = 483 lbs input load
4. Determine cable size: Apply your required safety factor to input load (step 3) to determine ultimate load.

Input load		Safety factor		Ultimate load
483 lbs	x	4	=	1932 lbs

Refer to following pages for control selection.

Ultimate Load
3000 lbs see page 19
1500 lbs or less see pages 17 and 18

Your Safety Factor

Each cable size shows the ultimate load. Safety factors are important in proper cable selection. A wide margin (4 to 1 or 5 to 1) between ultimate load and working load is not only safer, but the cable will operate more easily and greatly extends cable life. Detailed information regarding cable selection is available upon request.

Installation

Care should be exercised to insure that pull controls are installed with conduit end fittings securely fastened to a structural member. The conduit will always be in compression. The total degrees of bend should be minimized for the lowest deflection and friction.
On long control runs, the conduit should be clamped to supporting structure at least every 48 inches. Complete application recommendations will be provided on request. A sketch of the proposed installation will aid in selection of the proper control.

Preliminary Ordering Procedure

For Pull-Only Cable Controls

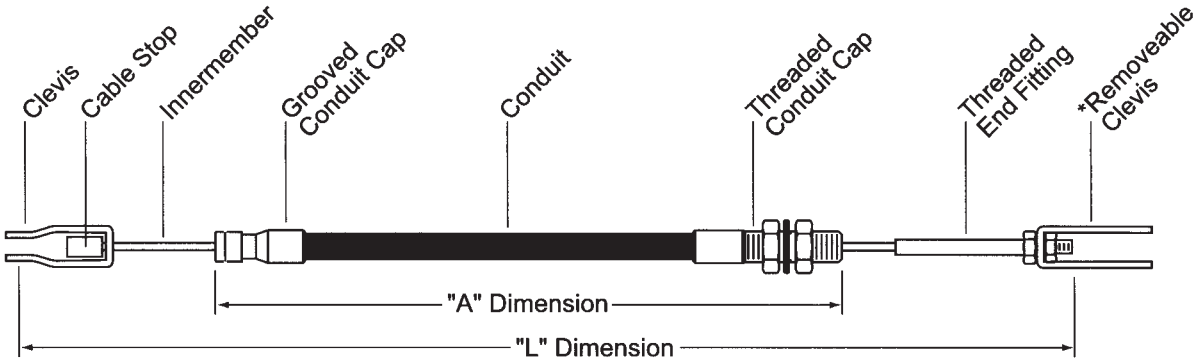

To specify a pull control, the following information must be given in the order listed:

1. Left innermember end fitting part number.
2. Left conduit end fitting part number.
3. Length “A” between conduit fitting reference points in inches.
4. Right conduit end fitting part number.
5. Right innermember end fitting part number.
6. Length “L” of innermember assembly between fitting reference points in inches.
7. Travel of the innermember in the conduit in inches. (Note: dimensions “L” must be sufficiently greater than dimension “A” to allow desired travel).

*Removable items should be listed separately.

Cablecraft® Ordering Codes

CS551 - 072 - 54 - 070 - TE505 - 64.5 - 6

Left Innermember End Fitting Part Number
(Clevis End Fitting with Cable Stop)

Left Conduit End Fitting Part Number
(Grooved Conduit End Fitting)

Length of Conduit Assembly
(54″) “A” Dimension

Right Conduit End Fitting Part Number
(Threaded Conduit End Fitting)

Right Innermember End Fitting Part Number
(Threaded Conduit End Fitting)

Length of Innermember Assembly
(64.5″) “L” Dimension

Travel (inches)
(6″)

Pull-Only Brake Cables

1500 lb Series

Ultimate Load: 1500 lb
Minimum Bend Radius: 5″
See page 16
for ordering procedure.

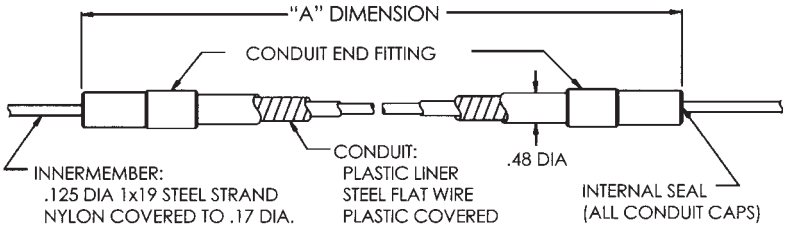

Threaded Conduit End Fitting

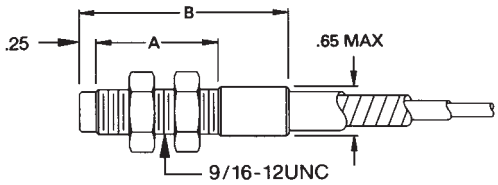

THREADED CONDUIT END FITTING

PART NO.	A	B
060	1.4	2.7
061	2.1	3.4

Grooved Conduit End Fitting

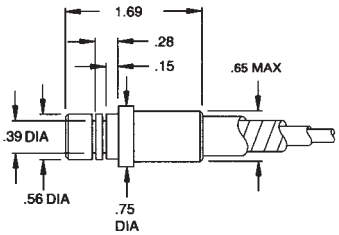

PART NO.	Use E-Clip
064	175-435-025

Grooved Conduit End Fitting

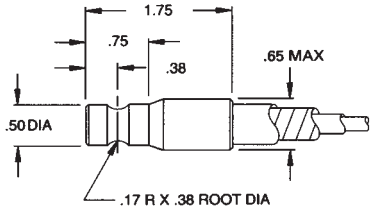

PART NO. 062

Clip-Lock Conduit End Fitting

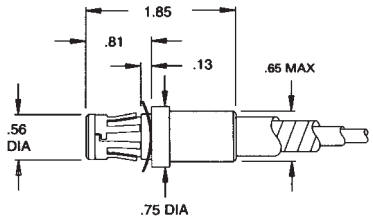

PART NO. 065
For .125 and .187 thick material.

Grooved Conduit End Fitting

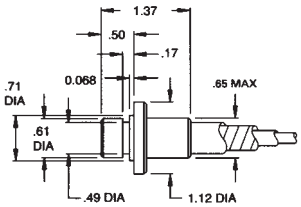

PART NO. 026

48° Clip-Lock Conduit End Fitting

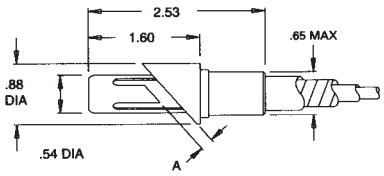

PART NO.	A
066	.13
067	.20

Grooved Conduit End Fitting

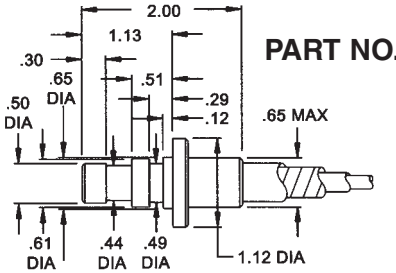

PART NO. 027

TUTHILL Controls Group®

Cablecraft®

Pull-Only Brake Cable Specifications

Threaded End Fitting	A	B	C
TE504	5/16-24	**3.62**	2.22
TE504-006	5/16-24	**2.00**	.97
TE504-007	5/16-24	**6.00**	4.60
TE506	3/8-24	**2.62**	1.47
TE523-001	1/4-28	**3.62**	2.47

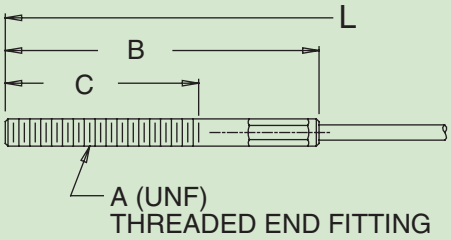

Cable Stop

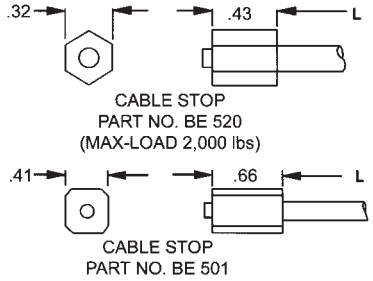

Ball End

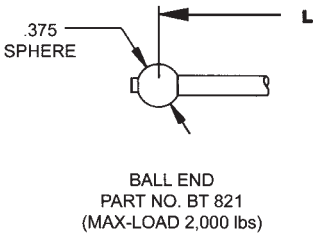

Eye End

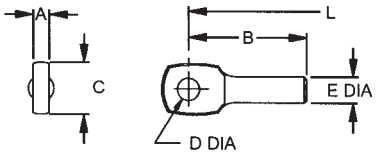

EYE END

PART NO.	A	B	C	D	E
157-047-000	.235	1.81	.75	.323	.375
EE9158	.240	1.60	.75	.500	.437

Strap Clevis Part Numbers *(For both 1500 and 3000 brake)*

Open Strap Clevis	A	B	D	F	G	H
CS540	-	1.62	.31	.62	.43	.266
CS540-1	-	1.62	.31	.62	.51	.266
CS540-6	-	2.50	.38	.75	.57	.386
CS540-7	-	2.50	.31	.62	.51	.266
CS541	-	1.94	.38	.75	.51	.266
CS541-3	-	1.94	.38	.75	.51	.323
CS541-5	-	2.00	.38	.75	.51	.266
CS541-7	-	2.50	.38	.75	.51	.266
CS541-8	-	2.50	.38	.75	.51	.323
CS542*	-	1.08	.50	1.00	.58	.323

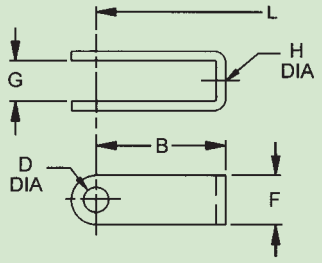

Step Strap Clevis	A	B	C	D	F	H
CS550	.31	1.56	.19	.31	.62	.266
CS550-1	.31	1.56	.19	.38	.62	.266
CS550-2	.31	1.56	.19	.31	.62	.316
CS550-4	.31	1.56	.19	.25	.62	.266
CS551	.38	1.75	.25	.31	.62	.266
CS551-1	.38	1.75	.25	.38	.62	.266
CS551-2	.75	2.38	.25	.31	.62	.316
CS551-3	.38	1.50	.25	.25	.62	.266
CS552	.31	2.38	.25	.31	.75	.266
CS552-1	.31	2.38	.25	.38	.75	.266
CS552-3	.38	2.38	.25	.43	.75	.316
CS552-4	.38	2.38	.25	.31	.75	.316
CS553	.50	1.88	.19	.38	.75	.266

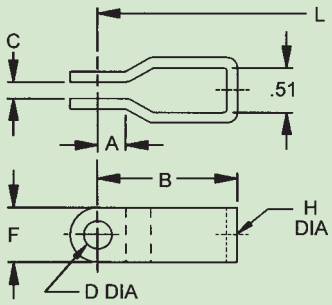

Closed Strap Clevis	A	B	C	D	F	H
CS562	.31	1.62	-	.31	.62	.316
CS563	.28	1.75	-	.31	.62	.316
CS564	1.00	2.38	-	.38	.75	.316

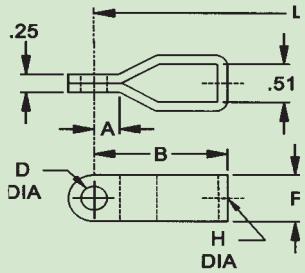

**use with 5/16 threaded end rod with nuts only*

All line art dimensions are represented in inches

TUTHILL Controls Group

Cablecraft®

Pull-Only Brake Cables

3000 lb Series

Ultimate Load: 3000 lb
Minimum Bend Radius: 7″
See page 16 for ordering procedure.

See page 18 for strap clevis part numbers.

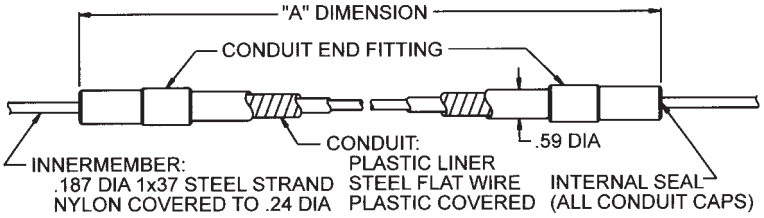

Threaded Conduit End Fitting

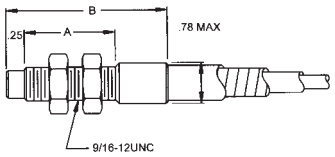

PART NO.	A	B
070	1.4	2.7
071	2.1	3.3

Grooved Conduit End Fitting

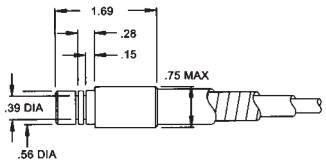

PART NO.	Use E-Clip
074	175-435-025

Grooved Conduit End Fitting

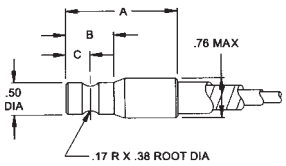

PART NO.	A	B	C
072	1.75	.75	.38
073	1.88	.88	.44

Clip-Lock Conduit End Fitting

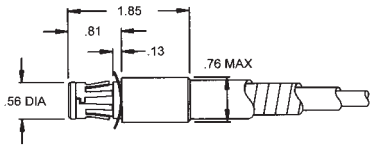

PART NO.
075
For .125 and .187 thick material.

48° Clip-Lock Conduit End Fitting

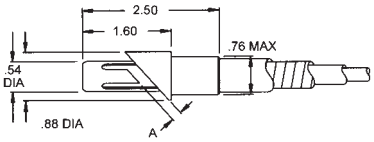

PART NO.	A
076	.33
077	.20

Ball End

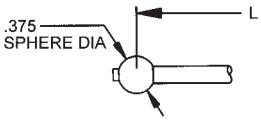

PART NO. BT 822
(2000 lb max load)

Cable Stop

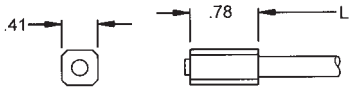

PART NO. BE 502

Eye End

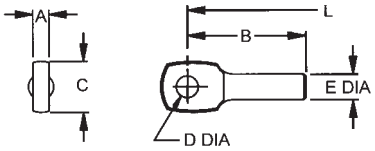

PART NO.	A	B	C	D	E
157-047-002	.235	1.81	.75	.323	.375

Threaded End Fitting	A	B	C
TE505	3/8-24	2.95	2.00
TE505-1	3/8-24	1.88	1.00
TE508	3/8-24	2.62	1.50
TE509-1	3/8-24	4.95	3.75
TE510-1	5/16-24	2.50	1.50
TE510-2	5/16-24	3.62	2.24
TE510-4	5/16-24	4.00	3.00
TE510-5	1/4-28	3.62	2.50
TE510-6	5/16-24	2.12	1.00
TE510-7	5/16-24	2.88	1.50
TE510-8	5/16-24	5.60	4.47
TE510-9	5/16-24	3.00	1.91
TE605	3/8-24	6.00	5.00

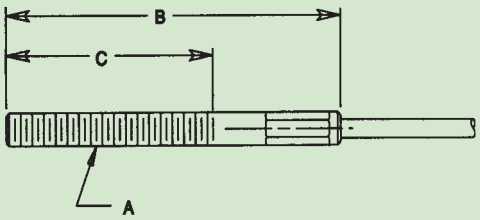

Cablecraft Locking Brake Levers

- Adjustable, over-center locking brake levers. No ratcheting, only “ON” (over-center) or “OFF” positions.
- Easy adjusting knob allows 1.6″ of cable to increase or decrease cable tension as needed to compensate for wear or load conditions.
- Load link is fabricated of 4130 alloy steel. Normal operation capacity 1000 lb.
- Ultimate load capacity 3000 lb (non-recurring static load).
- Unless otherwise specified, levers include connecting hardware. Supplied with all required clevis pins, washers and cotter pins needed to attach cable. Bolts to connect lever to vehicle are not provided.

Optional Features

Tamper resistant knob (adjustment limited by Allen-head set-screw).

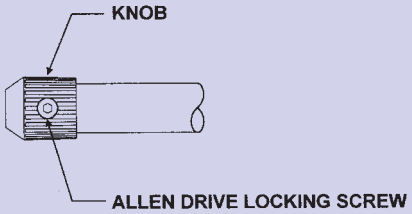

Weather resistant safety switch kit (normally closed) for extra security. Part No. B862

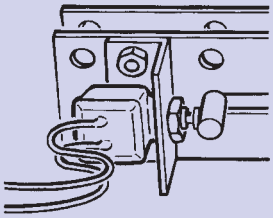

Specifications

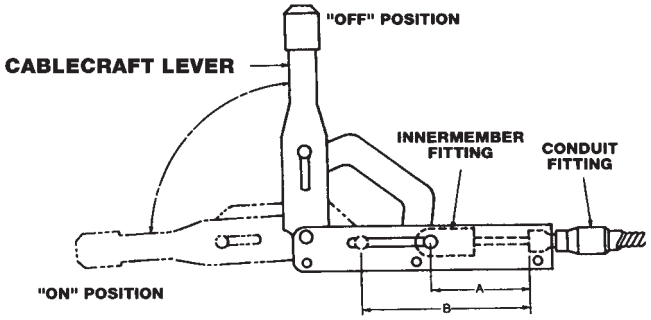

Cablecraft® Lever	Innermember Fitting		Conduit Fitting		Dimension		
	3000 lb	1500 lb	3000 lb	1500 lb	A	B min.	B max.
165-508-008	CS550-2	CS550	073	-	3.23	3.87	5.47
			072	062	3.36	4.00	5.60
165-508-011	CS550-2	CS550	072	062	2.71	3.35	4.95
165-508-023	154-047-002	157-047-000	072	062	2.38	3.02	4.62
165-508-028	CS550-2	CS550	075	065	3.14	3.78	5.35
165-508-010	CS550-2	CS550	073	-	1.70	2.34	3.94
			072	062	1.83	2.47	4.07
165-508-009	CS550-2	CS550	-	-	-	-	-
165-508-078	CS550-2	CS550	073	-	1.70	2.34	3.94
			072	062	1.83	2.47	4.07
165-508-013	157-047-002	157-047-000	073	-	2.27	2.91	4.51
			072	062	2.40	3.04	4.69

- Dimension A is with the lever in full “OFF” position. Use dimension A in calculating cable length.
- Dimension B minimum is with the lever in full “ON” position and adjusted for minimum (CCW) travel. Use dimension B minimum during installation and initial adjustment. Turn knob (CW) to add travel and increase brake pressure setting.
- Dimension B maximum is with the lever in full “ON” position and adjusted for maximum (CW) travel.

Locking Brake Levers

Side Mount 165-508-008

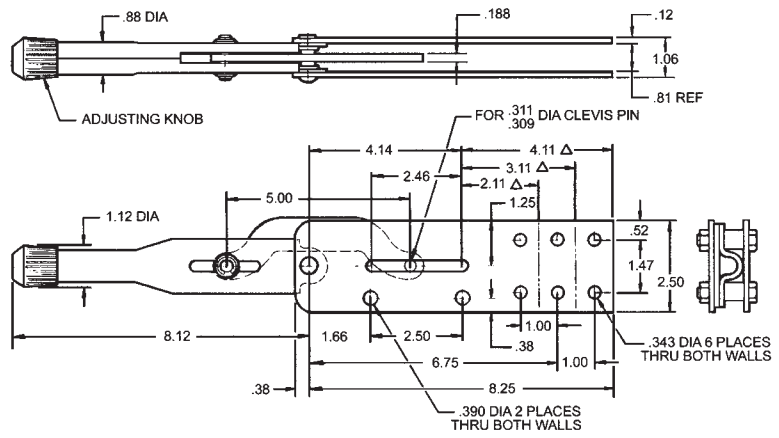

2.5 inches (64mm) wide side plates; one cable, with three alternate sets of cable clamp holes. For cowl, instrument panel, seat riser or frame installation.

Kit B815 — supplied with the following hardware:

- Clevis Pin
- Cotter Pin
- Washer
- Mounting Spacers (2)
- Cable Clamp
- Clamp Base
- Clamp Spacers (2)

Side Mount 165-508-009

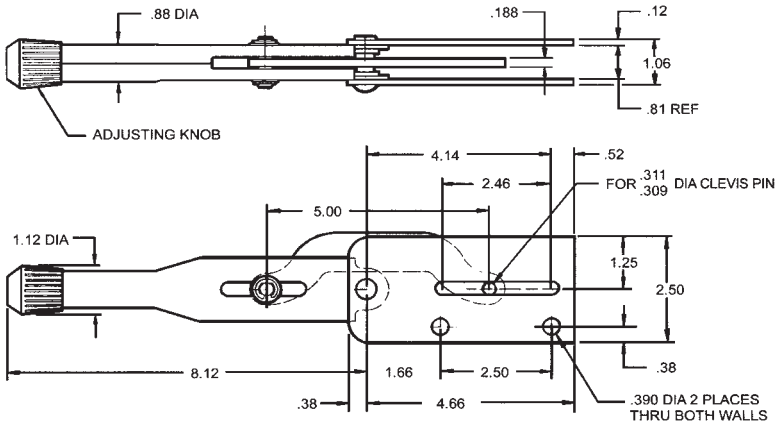

2.5 inches (64mm) wide side plates; one cable. For cowl, instrument panel, seat riser or frame installation. No cable support.

Kit B816 — supplied with the following hardware:

- Clevis Pin
- Cotter Pin
- Washer
- Mounting Spacers (2)

Side Mount 165-508-011

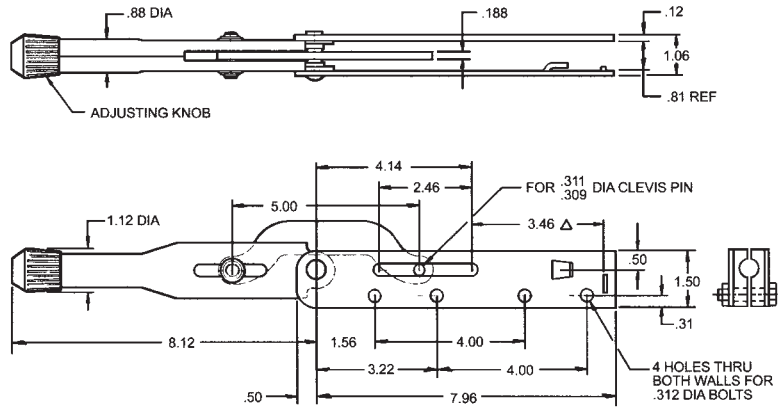

1.5 inches (38mm) wide side plates; one cable. For cowl, instrument panel, seat riser or frame installation.

Kit B834 — supplied with the following hardware:

- Clevis Pin
- Cotter Pin
- Washer
- Mounting Spacers (2)
- Cable Clamp

Locking Brake Levers

Side Mount 165-508-028

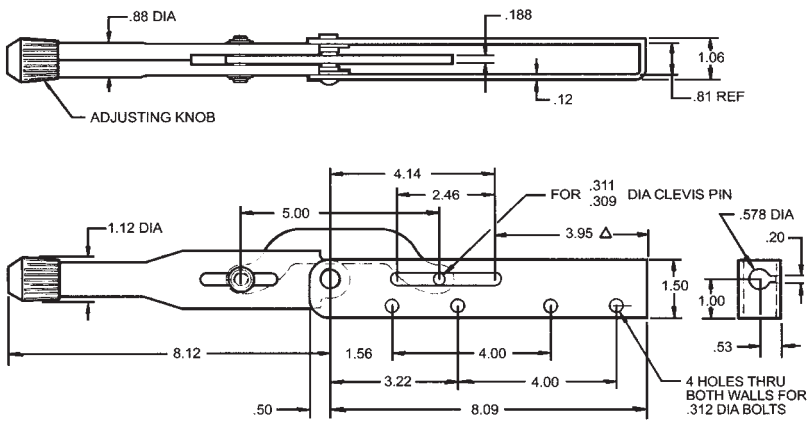

1.5 inches wide side plates; one cable. For cowl, instrument panel, seat riser or frame installation.

Kit B837 — supplied with the following hardware:

- Clevis Pin
- Cotter Pin
- Washer
- Mounting Spacers (2)
- Cable Clamp
- Clamp Spacers (2)

Flange Mount-Rigid 165-508-010

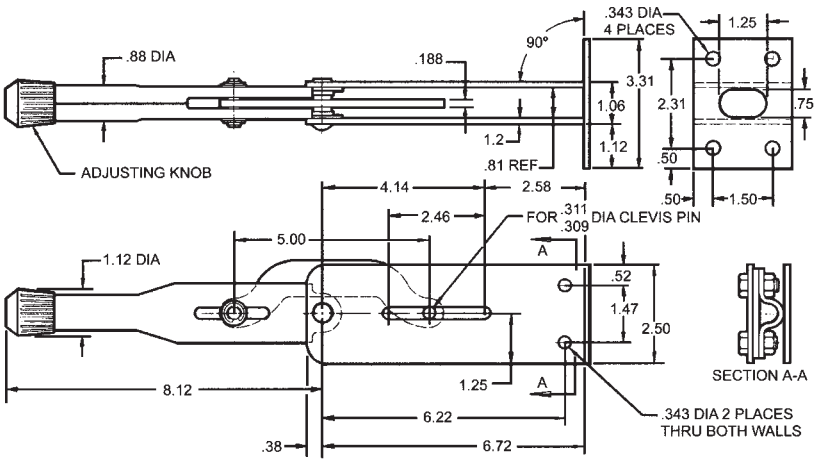

2.5 inches (64mm) wide side plates; one cable. For bulk-head floor or island (doghouse) installation. The rigid frame maintains alignment of clevis pin guide slots for improved life of both the pin and side plates.

Kit B817 — supplied with the following hardware:

- Clevis Pin
- Cotter Pin
- Washer
- Cable Clamp
- Clamp Base
- 5/16-24 Bolts (2) Nuts(2)

Flange Mount 165-508-078

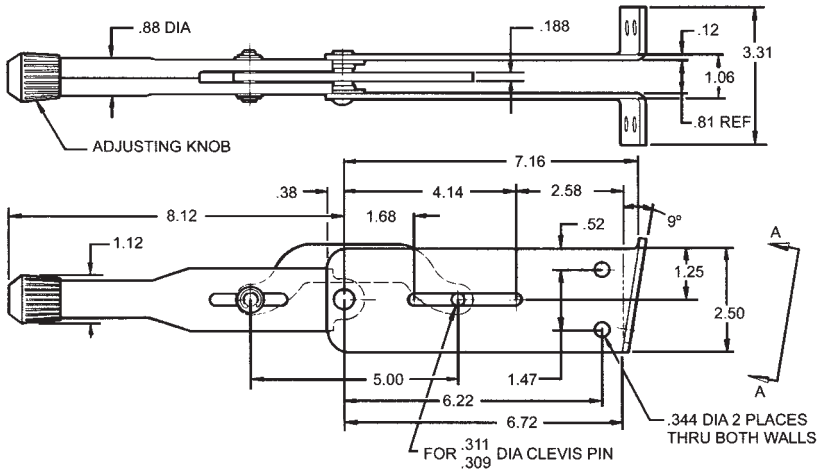

2.5 inches (64mm) wide side plates; one cable. For bulk-head floor or island (doghouse) installation. Angle wing flange mounting.

Kit B838 — supplied with the following hardware:

- Clevis Pin
- Cotter Pin
- Washer
- Cable Clamp
- Clamp Base
- 5/16-24 Bolts (2) Nuts(2)

Locking Brake Levers

Side Mount 165-508-013

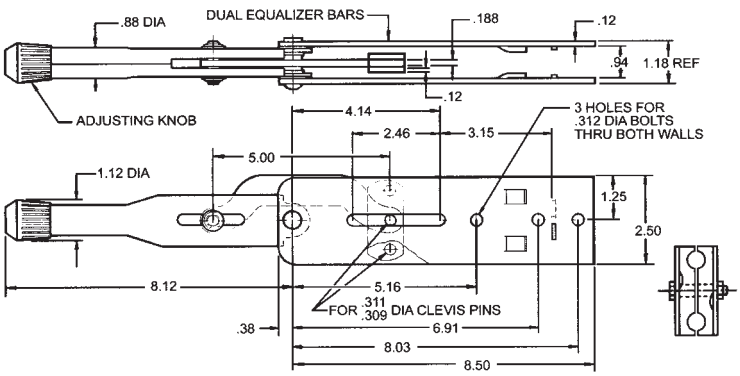

2.5 inches (64mm) wide side plates; two cables. For cowl, instrument panel, seat riser or frame installation.

NOTE: When considering load requirements, the load on the lever assembly will be the sum of the load in each cable.

Kit B835 — supplied with the following hardware:

- Clevis Pins (2)
- Cotter Pins (2)
- Washers (2)
- Mounting Spacers (2)
- Cable Clamps

Flange Mount-Rigid 165-508-023

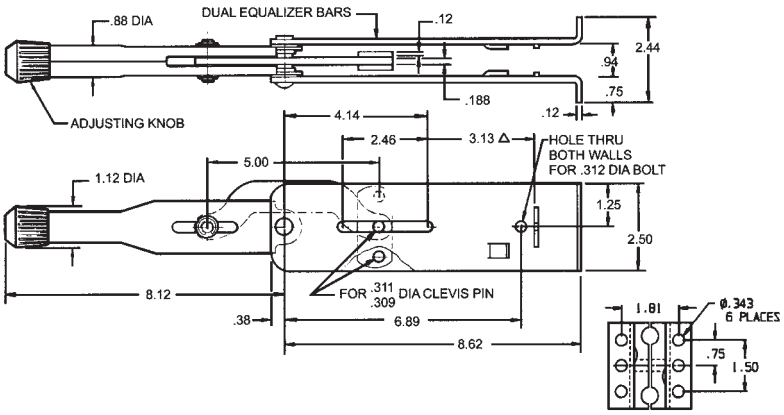

2.5 inches (64mm) wide side plates; two cables. For bulkhead, floor or island (doghouse) installation.

NOTE: When considering load requirements, the load on the lever assembly will be the sum of the load in each cable. Wing flange mounting.

Kit B835 — supplied with the following hardware:

- Clevis Pins (2)
- Cotter Pins (2)
- Washers (2)
- Mounting Spacers (2)
- Cable Clamps

Accessories

Spacers

Part No.	"A"
DG 604-1	0.81
DG 604-2	0.57
DG 609	0.53

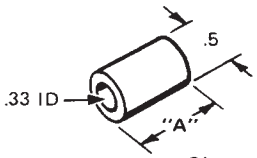

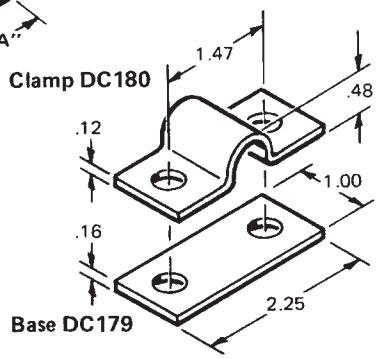

Clamp and Base
C908 kit includes:
1 ea. DC 179-1 base
1 ea. DC 180 clamp

Cable Clamps

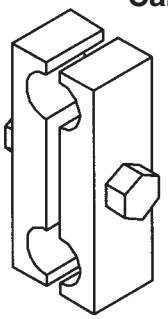

190-852-001
Double

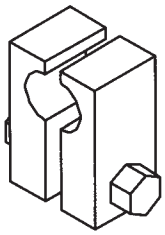

190-852-002
Single

TUTHILL Controls Group

Cablecraft®

Pull-Only Clutch Cables

High quality replacements for most cab-over engine vehicles and other similar applications. Built to specifications by your local cable assembler.

Generic clutch replacement cables HD conduit, special clutch innermember
Part No. CA235-A-L (5/16-24 end rods) Part No. CA236-A-L (3/8-24 end rods)

Order Code: A = Conduit length; L = Length overall

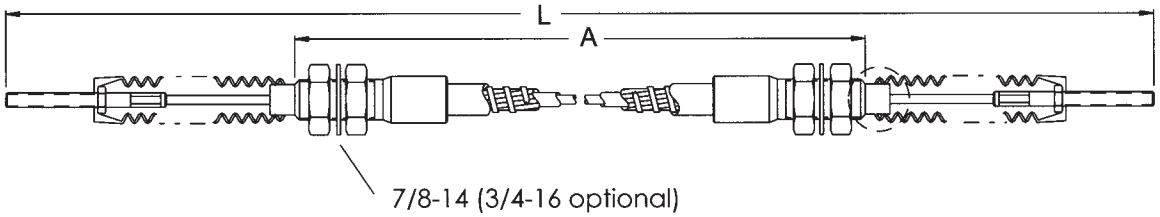

General Motors® style clutch cable, 1500 lb brake conduit and innermember
Part No. CA270-XXX (XXX = Dash number, see table below)

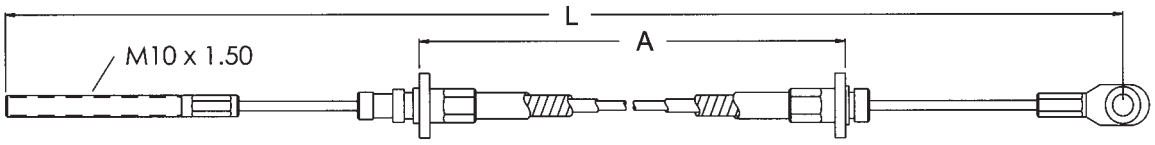

CA270-XXX

Dash No.	GM® Part No.	A	L
-010	15520115	47.56	76.69
-009	15518380	43.31	71.65
-008	15518379	51.18	79.53
-007	15518378	44.88	74.21
-006	15518377	37.60	66.93
-005	15507983	44.55	69.01
-004	15507982	26.00	52.75
-003	15507981	45.27	72.91
-002	15507980	44.49	72.95
-001	15507979	40.94	68.07

GM is a registered trademark of General Motors.

General Motors® style clutch cable, 1500 lb brake conduit and innermember
Part No. CA271-A-L (A = Conduit length; L = Length overall)

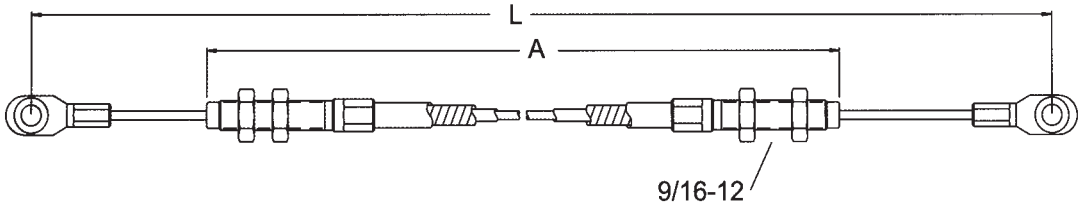

All line art dimensions are represented in inches

TUTHILL Controls Group®

Cablecraft®

Pull-Only Clutch Cables

Mack Truck® style clutch cable, HD conduit and special clutch innermember
Part No. CA312-A-L (A = Conduit length; L = Length overall; see table)

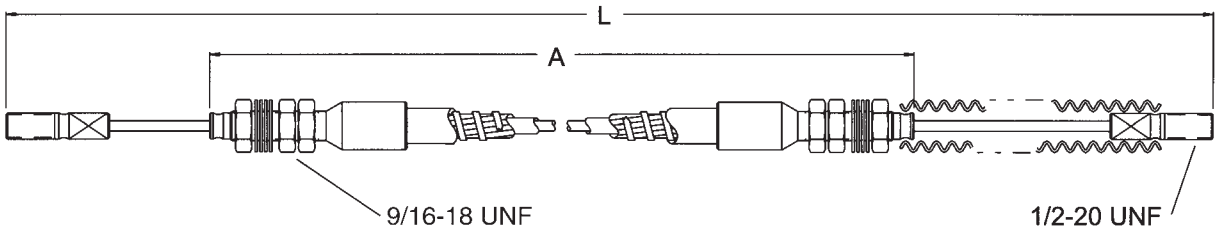

CA312-A-L

Part No.	A	L
CA312-34.6-42.0	34.6	42.0
CA312-55.6-63.0	55.6	63.0
CA312-79.6-87.0	79.6	87.0
CA312-85.6-93.0	85.6	93.0
CA312-91.6-99.0	91.6	99.0
CA312-102.6-110.0	102.6	110.0
CA312-127.6-135.0	127.6	135.0
CA312-25.6-36.0	25.6	36.0
CA312-34.6-45.0	34.6	45.0
CA312-43.6-54.0	43.6	54.0
CA312-55.6-66.0	55.5	66.0
CA312-67.6-78.0	67.6	78.0
CA312-79.6-90.0	79.6	90.0
CA312-85.6-96.0	85.6	96.0
CA312-91.6-102.0	91.6	102.0
CA312-103.6-114.0	103.6	114.0
CA312-118.6-129.0	118.6	129.0
CA312-29.6-40.0	29.6	40.0
CA312-95.6-106.0	95.6	106.0
CA312-107.6-118.0	107.6	118.0

IHC Transtar® style clutch cable, HD conduit and special clutch innermember
Part No. CA327-L (L = Length overall)

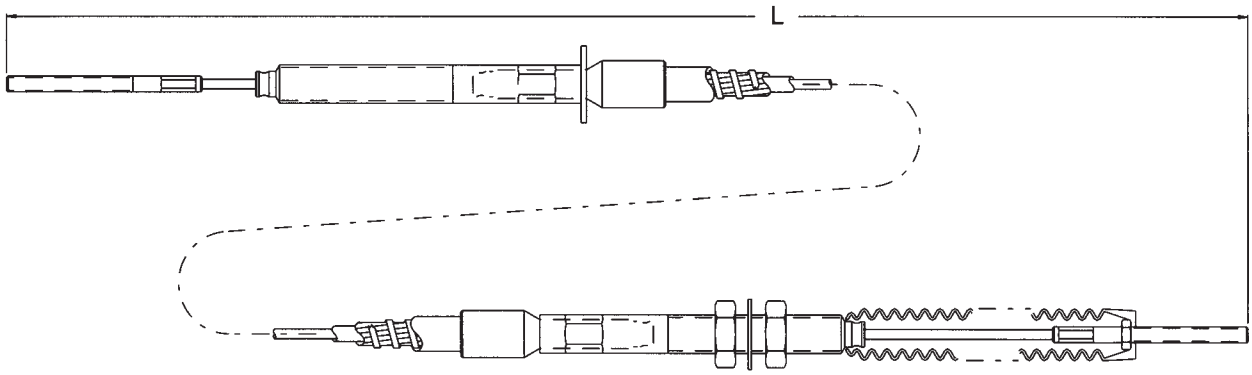

All line art dimensions are represented in inches

Pull-Only Clutch Cables

See “Push-Pull Cable Specifications” (page 9) for mid-travel dimensions.
HD conduit, brake/clutch innermember 500 lb pull-only operating load.

Order Code: T = Travel 2″- 6″; L = Length overall

Part No. A183-400-T-L (5/16-24 end rods MD) Grooved-Grooved
Part No. A183-111-T-L (3/8-24 end rods HD) Grooved-Grooved

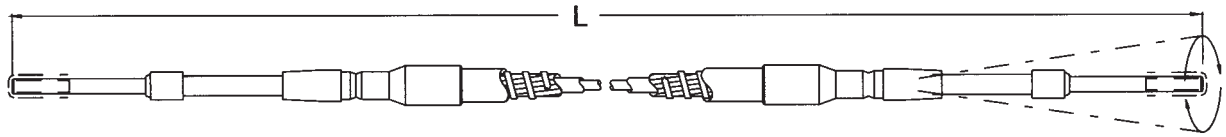

Part No. A183-401-T-L (5/16-24 end rods MD) Grooved-Threaded 11/16-16
Part No. A183-110-T-L (3/8-24 end rods HD) Grooved-Threaded 7/8-14

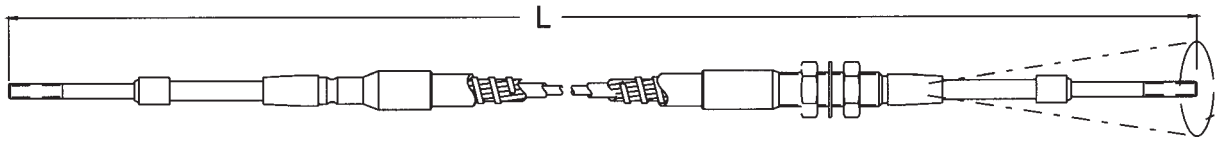

Part No. A183-402-T-L (5/16-24 end rods MD) Threaded-Threaded (both ends 11/16-16)
Part No. A183-104-T-L (3/8-24 end rods HD) Threaded-Threaded (both ends 7/8-14)

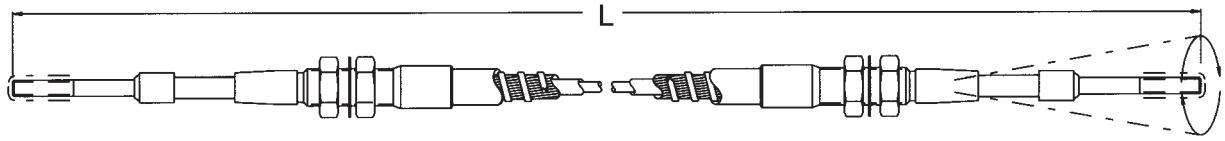

All line art dimensions are represented in inches

Throttle/Accelerator Cables (Pull-Only)

Part No. A156-637-L (1/4-28 end rods) Grooved-Grooved
Part No. A156-657-L (10-32 end rods) Grooved-Grooved

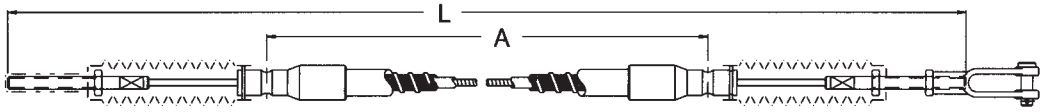

Part No. A156-638-L (1/4-28 end rods) Threaded-Grooved
Part No. A156-658-L (10-32 end rods) Threaded-Grooved

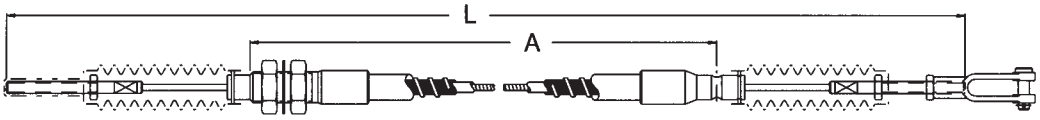

Part No. A156-679-L (1/4-28 end rods) Threaded-Threaded
Part No. A156-680-L (10-32 end rods) Threaded-Threaded

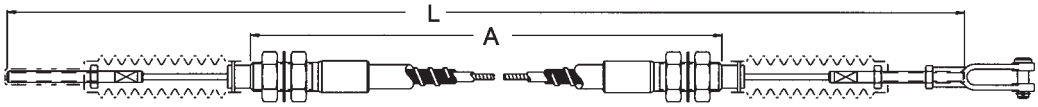

"A" dimension fixed in relation to "L" dimension. Bellows on both ends.

Part No. CA305-TT-A-L (1/4-28 end rods) Threaded-Threaded
Part No. CA306-TT-A-L (10-32 end rods) Threaded-Threaded

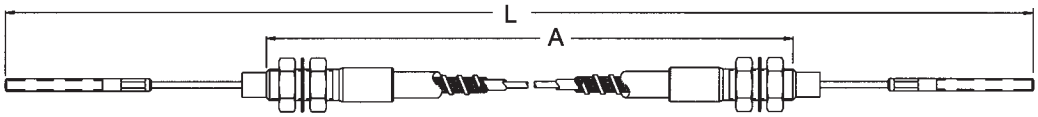

Part No. CA305-TG-A-L (1/4-28 end rods) Threaded-Grooved
Part No. CA306-TG-A-L (10-32 end rods) Threaded-Grooved

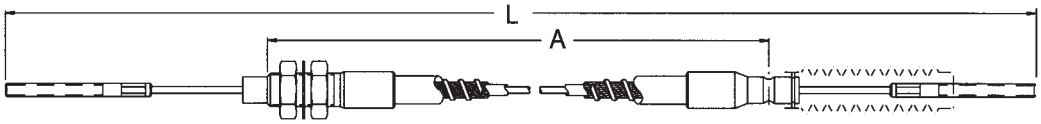

Part No. CA305-GG-A-L (1/4-28 end rods) Grooved-Grooved
Part No. CA306-GG-A-L (10-32 end rods) Grooved-Grooved

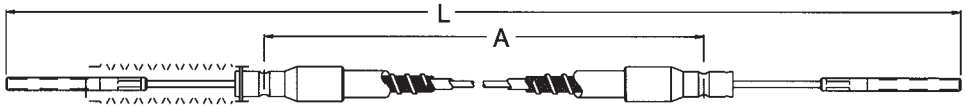

Part No. CA307-A-L (1/4-28 end rods) Special

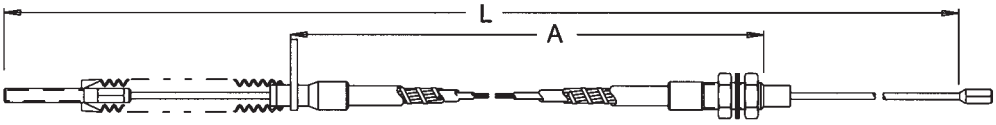

"A" dimension variable in relation to "L" dimension. Bellows optional.

All line art dimensions are represented in inches

TUTHILL Controls Group®

Cablecraft®

Medium-Duty Throttle

Applications:

- Farm machinery
- Heavy machinery
- Landscaping equipment
- Construction equipment
- Warehouse equipment

Features:

- Steel construction
- Rear or front throttle connection
- Multiple base bolt patterns
- Spring returned pedal
- Travel: 3.00″ maximum
- -25°F —160°F temperature range (-14°C — 90°C)
- Coated sheet metal components
- Embossed pedal surface reduces slippage

Material:

- Coated sheet metal
- Plastic bushings
- Plastic boot plated steel hardware

Fast and Economical Installation

A throttle cable simplifies the installation, providing a complete system to suit many applications.

The pedal tower mechanism is designed to be dropped through the floor and secured. Cable attachment can then be quickly and easily completed.

Medium-Duty Pedal CH530

For use with single pull-only throttle (gas) cables.

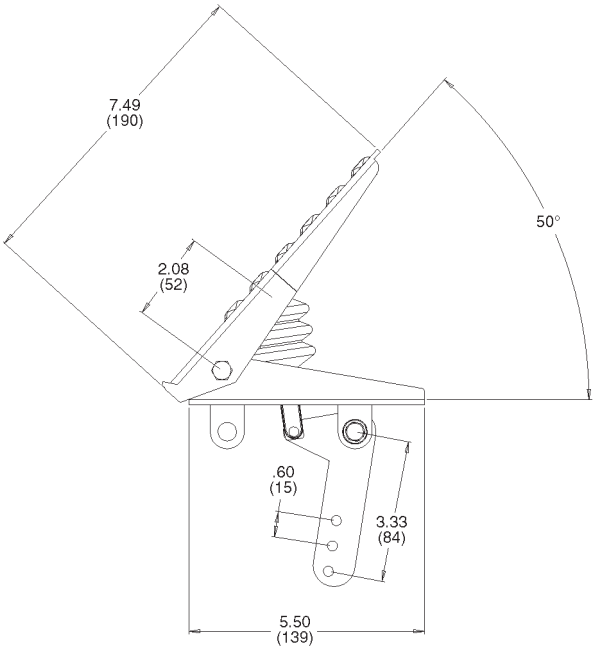

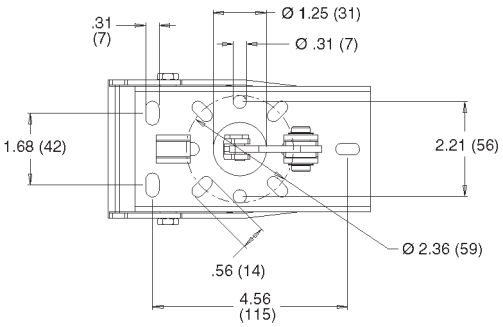

All line art dimensions are represented as follows: in (mm)

TUTHILL Controls Group

Cablecraft®

Heavy-Duty Throttle

Applications:

- Medium & heavy-duty trucks
- Construction equipment
- Farm equipment
- Buses

Features:

- Die cast & steel components
- Multiple base bolt patterns
- Spring returned pedal
- Adjustable pedal angle
- Throttle cable exit is adjustable
- Travel: 2.00″ maximum
- -25°F — 160°F temperature range (-14°C — 90°C)
- Corrosion-resistant die cast components, plated steel hardware and plastic bushings

Material:

- Coated sheet metal
- Plastic bushings
- Plastic boot plated steel hardware

Suggested End Fittings:

- Clevis and pin, or end fitting with right angle bend

Standard Pedal 165-574-001

For use with one pull-only accelerator cable.

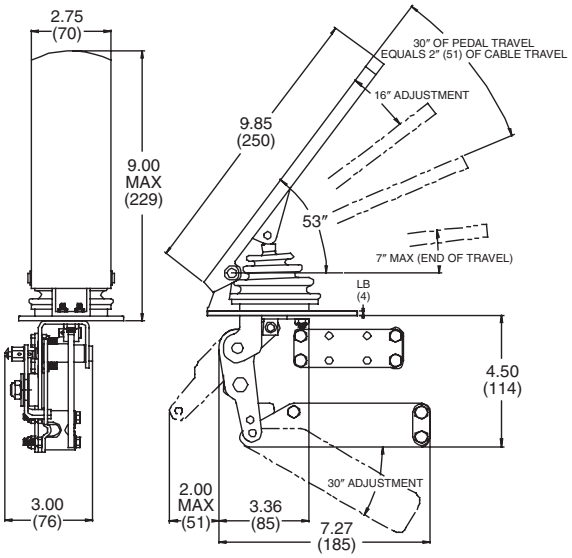

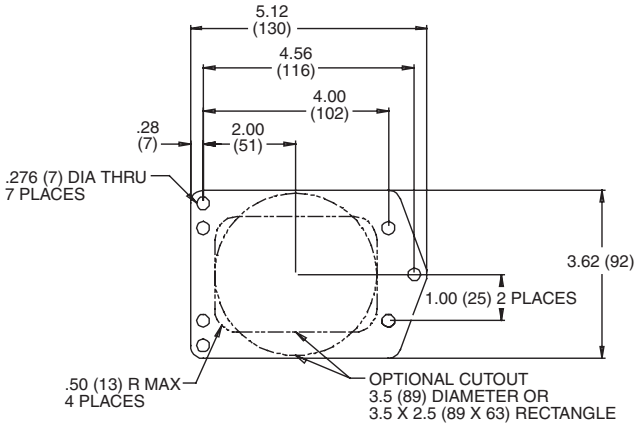

Fast and Economical Installation

A throttle cable simplifies the installation, providing a complete system to suit many applications.

The pedal tower mechanism is designed to be dropped through the floor and secured. Cable attachment can then be quickly and easily completed.

All line art dimensions are represented as follows: in (mm)

TUTHILL Controls Group ®

Cablecraft®

Remote Valve Control Specialty Cables

Used to operate hydraulic valves. Ideal for wet-line kits, relocating valves, or vehicle modifications. Mounting kits available for most popular “spool” type valves.

Part No. A17X-334 Utility Part No. A31X-334 EXT

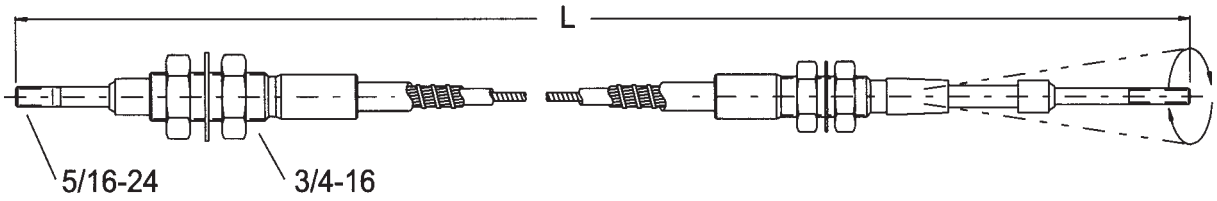

Part No. A17X-335 Utility Part No. A31X-335 EXT

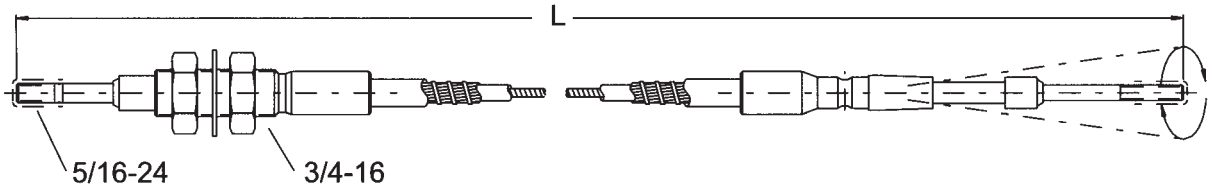

Part No. A17X-342 Utility

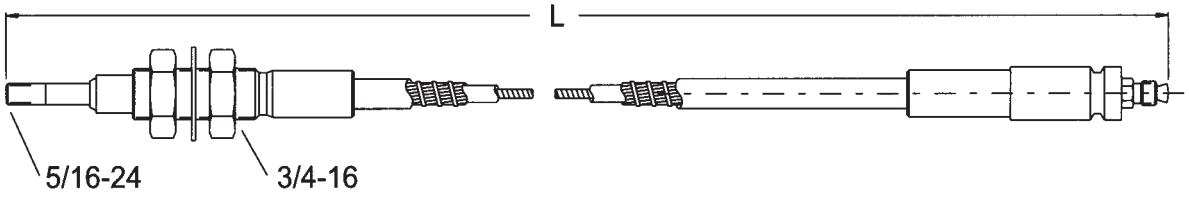

Part No. A17X-351 Utility

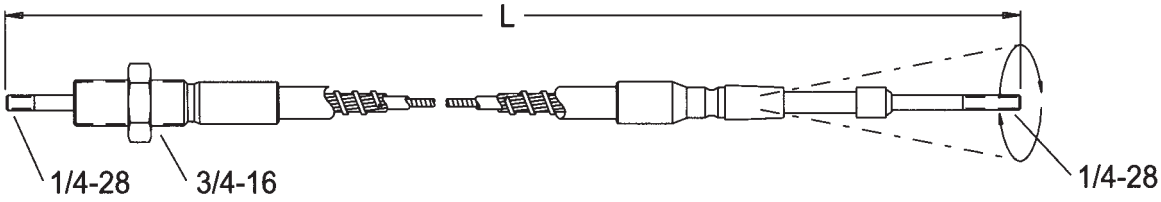

Part No. A17X-352 Utility

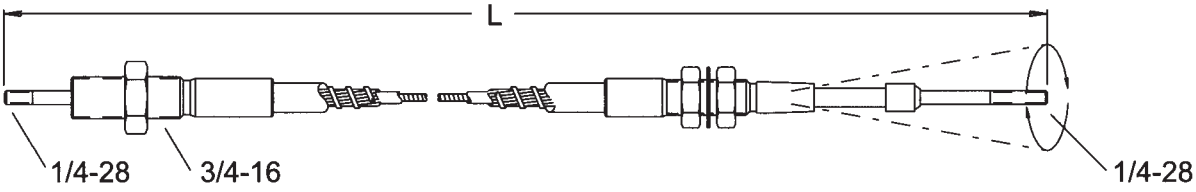

All line art dimensions are represented as follows: in (mm)

TUTHILL Controls Group

Cablecraft®

Remote Valve Control Specialty Cables (continued)

Part No. CA260 Utility Part No. CA261 EXT

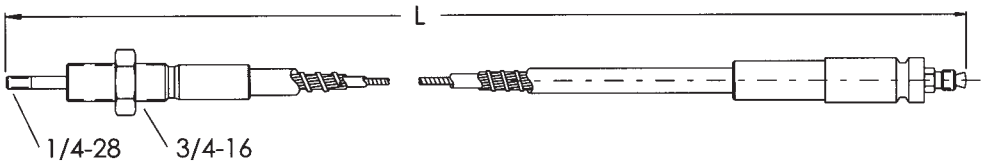

Part No. CA22XG

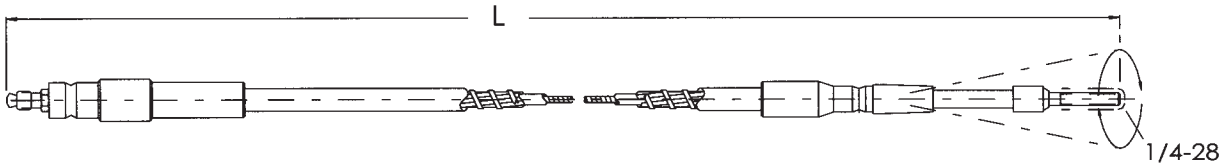

Part No. CA22XT

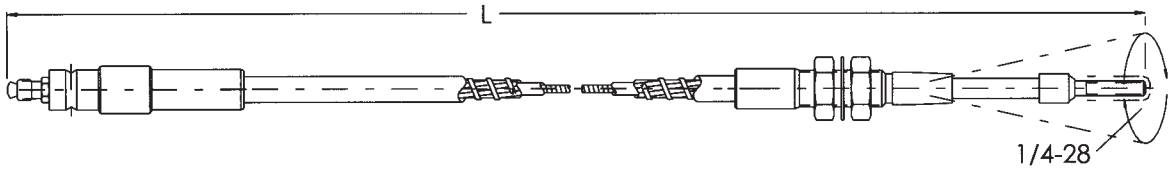

Cable Mounting Kits

Cablecraft® mounting kits fit most popular valves. HUSCO mounting kit shown in diagram.

Kit includes:
Adapter bracket, clevis, clevis pin and hardware

Part No.	For Use On:
185-101-001	Comm. Shearing 505
185-101-002	Comm. Shearing D50
185-101-003	Comm. Shearing A35
185-101-004	Comm. Shearing A20
185-101-005	Comm. Shearing VA20
185-101-006	HUSCO 6000
185-101-007	HUSCO 7120
185-101-008	Gresen V20, V31P, V42, CP, CT, CPT, CS, 25P, 25PK

All line art dimensions are represented as follows: in (mm)

HUSCO 5000 Valve Control Cables

These cables include cable mounting bracket, jam nuts and clevis pin.

Part No. A17X-341

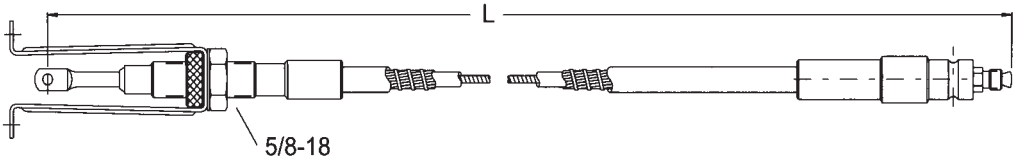

Part No. A17XX-362 Utility Part No. A31X-362 EXT

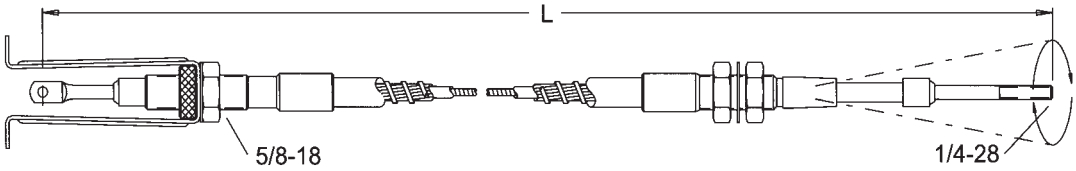

Part No. A17XX-363 Utility Part No. A31X-363 EXT

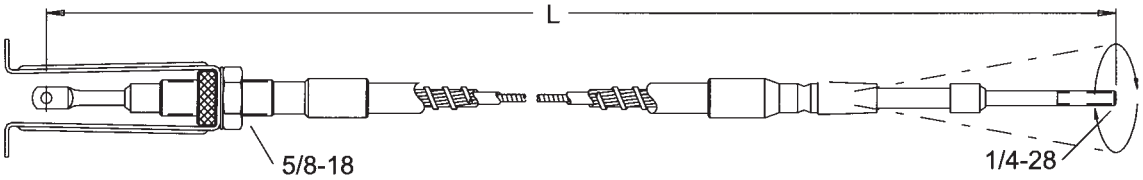

Single and Multi Axis Levers

Single Axis
Valve Lever
#165-042-001

Cablecraft® Joystick
Multi Axis Lever
#165-038-199

Cablecraft®
HD Lever
#165-041-002

All line art dimensions are represented as follows: in (mm)

TUTHILL Controls Group® Cablecraft®

Modulator Specialty Cables

Modulator and cable interconnect Allison® automatic transmission with engine fuel control. Modulator can be set to either “push” or “pull” to operate.

Cablecraft® Modulator Unit and Cable

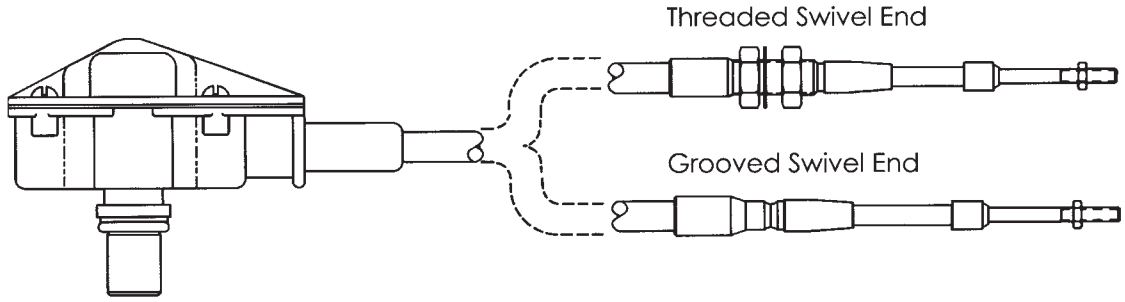

Modulator Unit with Cable

Cable Output End	Pull To Operate	Push To Operate	Replacement Modulator Box
Grooved Mount			
173 Utility	CA 343-3-001-L	CA 343-3-002-L	Part No. 165-900
174 Utility	CA 343-4-001-L	CA 343-4-002-L	
Threaded Mount			Slip Clevis
173 Utility	CA 341-3-001-L	CA 341-3-002-L	Part No. AC-310
174 Utility	CA 341-4-001-L	CA 341-4-002-L	

Replacement Cables for Cablecraft Modulator

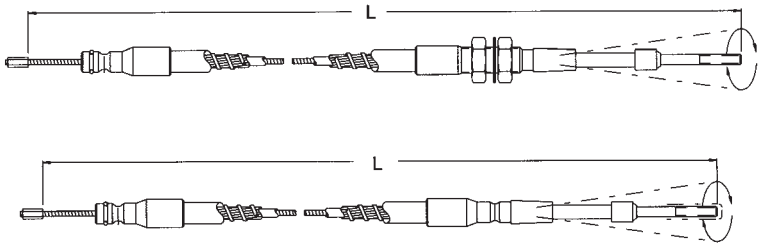

Cable Only Part No.	Cable Output End
	Threaded Mount
CA 341-3	173 Utility
CA 341-4	174 Utility
	Grooved Mount
CA 343-3	173 Utility
CA 343-4	174 Utility

Replacement Cables for other USA Manufactured Modulator

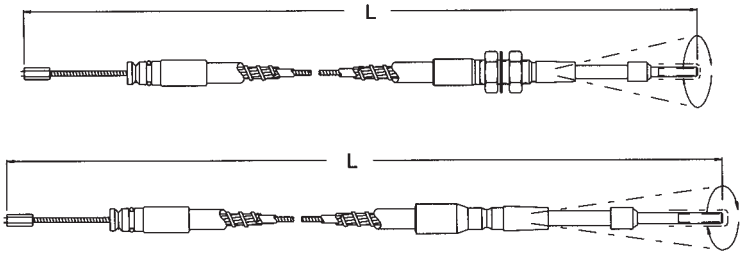

Cable Only Part No.	Cable Output End
	Threaded Mount
CA 213 T-L	173 Utility
CA 214 T-L	174 Utility
	Grooved Mount
CA 213 G-L	173 Utility
CA 214 G-L	174 Utility

Automotive Shift Specialty Cables

Replacements for popular brand shift cables.
Order Code: X = 3 for Carbon Steel, X = 4 for Stainless Steel; L = Length

B&M® Shift Part No. CA248-X-L

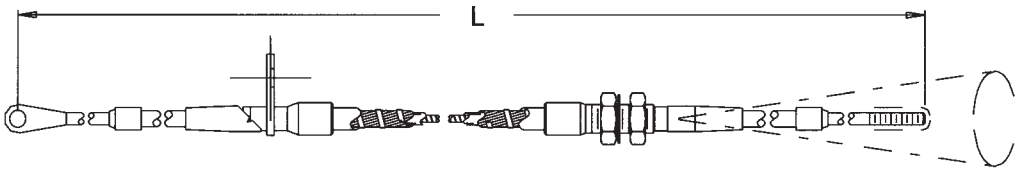

Dodge® Motor Home Part No. CA249-X-L

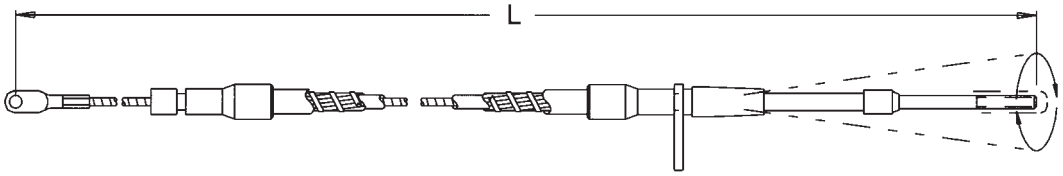

Hurst® Shift Part No. CA273-X-L

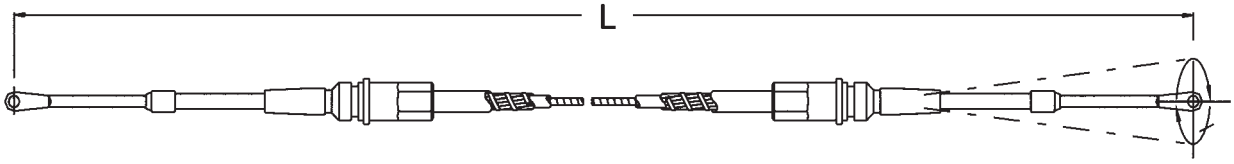

Hurst® Shift Part No. CA274-X-L

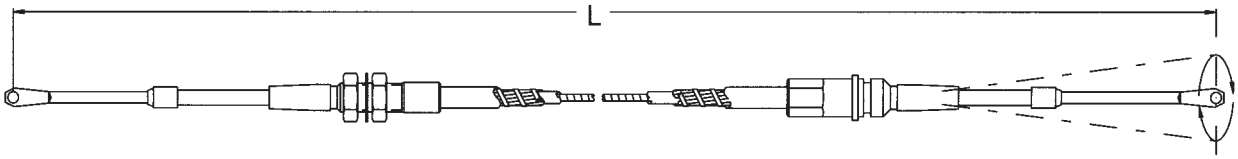

Hurst® Shift Part No. CA275-X-L

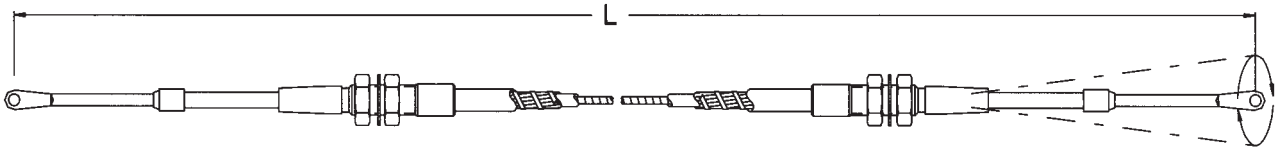

MTS Cables (Manual Transmission System)

Replacements for Cablecraft's® cable operated manual transmission shift system.

Order Code: X = 3 for stainless end rods with Model 6 seals
X = 4 for stainless support tubes and end rods with Model 6 seals
L = Length

Part No. A31X-105-L Grooved-Grooved

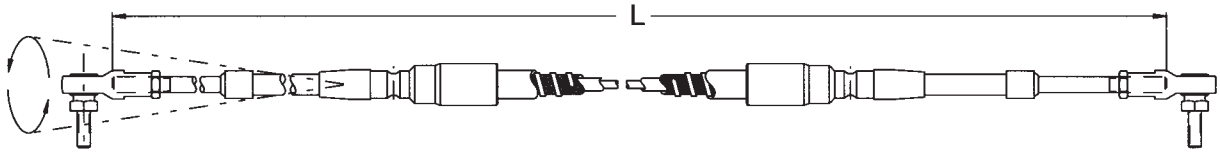

Part No. A31X-106-L Same as -105 but with an umbrella seal

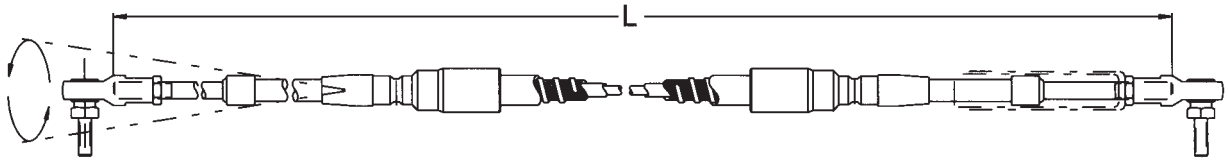

Part No. A31X-113-L Grooved-Threaded

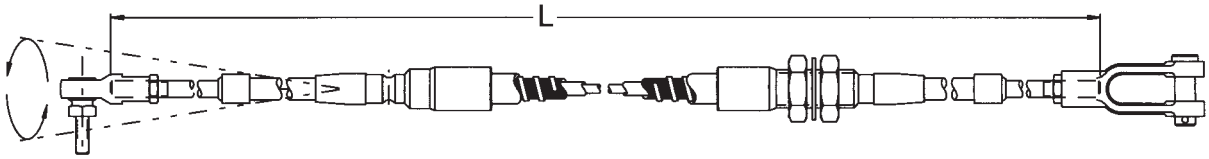

Unidrum Lever Control Replacement Cables

Part No.	Duty	Cap	Travel
A17X-330	LD	T	2″
A17X-331	LD	T	3″
A17X-332	LD	G	2″
A17X-333	LD	G	3″

Part No.	Duty	Cap	Travel
A17X-530	VLD	T	2″
A17X-531	VLD	T	3″
A17X-532	VLD	G	2″
A17X-533	VLD	G	3″

Part No. A17X-330 Grooved

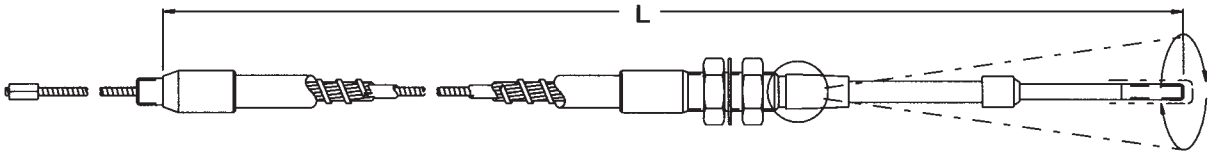

Part No. A17X-332 Threaded

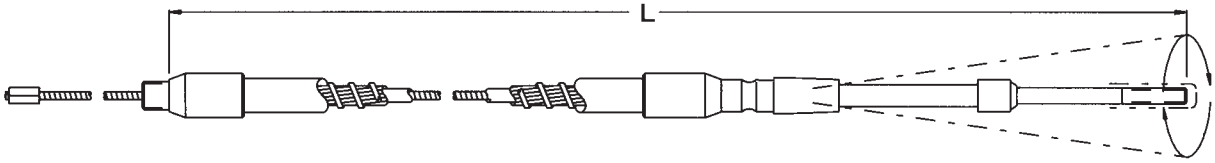

Unidrum Lever Control Specialty Cables

Unidrum Lever Control and Cable Combination

Optional lever/cable combinations offer a variety of applications for light lever controls.

Cablecraft® Ordering Codes

UDL - 1 - 4 - 4 - 2 - 120

Basic Unidrum Lever

Knob Color

1 Black 165-505-101 2 Red 165-505-102

Cable Exit Position (see illustration)

1 Lower Mount, Left Exit 3 Upper Mount, Left Exit
2 Lower Mount, Right Exit 4 Upper Mount, Right Exit

Output End Configuration, Cable Size & Type

	Style	Size	Type
1	Threaded Swivel	VLD	Utility
2	Grooved Swivel	VLD	Utility
3	Threaded Swivel	LD	Utility
4	Grooved Swivel	LD	Utility
5	Threaded Cap	VLD	Bristow®
6	Grooved Cap	VLD	Bristow®

Travel (inches)

	Cable	Lever
2	2″	approx. 90°
3	3″	approx. 135°

Overall Length (inches)

Cable Exit Positions

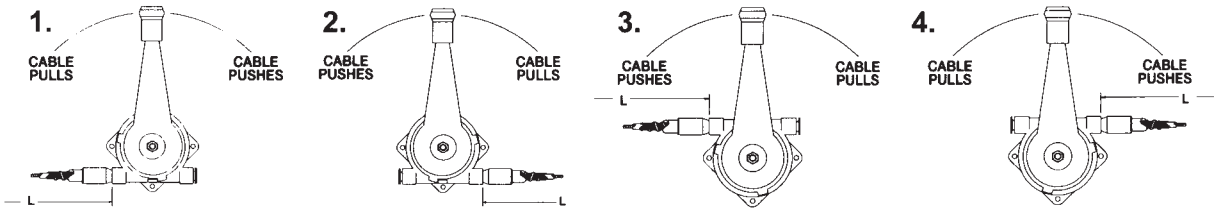

1 **Threaded Swivel**
Dimension A
Per Stroke (extended)
2″ 6.94″ 3″ 8.94″

2 **Grooved Swivel**
Dimension A
Per Stroke (extended)
2″ 6.25″ 3″ 8.25″

3 **Threaded Swivel**
Dimension A
Per Stroke (extended)
2″ 7.18″ 3″ 9.18″

4 **Grooved Swivel**
Dimension A
Per Stroke (extended)
2″ 6.56″ 3″ 8.56″

VLD Utility — Cable Output End Fittings

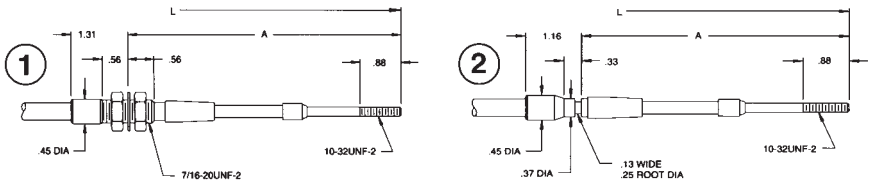

LD Utility — Cable Output End Fittings

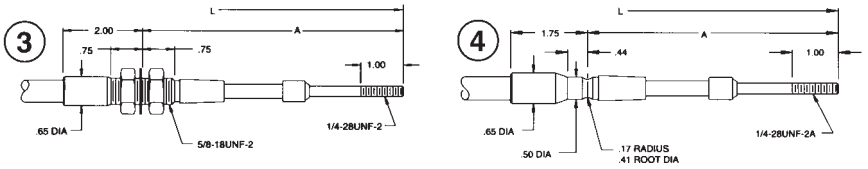

TUTHILL Controls Group®

Cablecraft®

Technical/Application Data

Industrial Controls Warnings

The following warnings describe important push-pull cable operation and maintenance information

1. Do not adjust the Cablecraft®/Bristow® control cable with the power on or the engine running. Serious injury or death could result.
2. A gradual or sudden increase in the no-load friction (cable disconnected at both ends) of a Cablecraft®/Bristow® control cable is an indication of a pending or present performance problem. The control cable should be replaced, otherwise serious injury or death may result.
3. A gradual or sudden decrease in the usable stroke, is an indication of a pending or present performance problem. The Cablecraft®/Bristow® control cable should be replaced, otherwise serious injury or death may result.
4. Cablecraft®/Bristow® control cables which have moisture inside of them and/or have frozen should be replaced. Do not apply heat to thaw or dry control cables.
5. Cablecraft®/Bristow® control cables are lubricated for the life of the control cable. Do not remove the seals or lubricate the control cable.
6. Cablecraft®/Bristow® control cables are designed to be non-repairable. Do not attempt to repair this control cable.

WARNING!

Since the manufacturer is unable to determine all applications in which a part may be placed, it is the user's responsibility to determine the suitability of the part for its intended use. This is especially true where safety is a factor. Incorrect application or installation may result in property damage, bodily injury, or death. For application assistance/technical questions, please contact us at the appropriate location listed below or through our website at www.tuthillcontrols.com.

Hardware/End Fittings

Slip Clevis

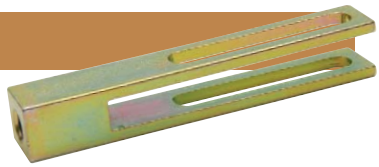

Part Number	Thread	Pin Dia.	Length	Inside Opening	Inside Depth
AC310	1/4-28 UNF	1/4″	3.25	.28″	2.5″

Female Threaded Eye Ends

Part Number	Internal Threads	Pin Hole	Thickness
EE9061	5/16-24	1/4″	.438
EE9069	10-32	1/4″	.344
EE9151	1/4-28	1/4″	.344
185-051-001	5/16-24	9/32″	.250

End Rod Thread Adapters

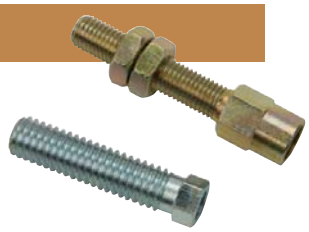

Part Number	From (Internal)	To (External)
161-009-001	1/4-28	3/8-28
161-009-003	10-32	5/16-24
161-009-005	1/4-28	3/8-16
161-009-006	5/16-24	3/8-24
161-009-007	10-32	1/4-28

Threaded Pivots

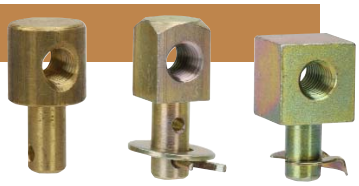

Part Number	Internal Threads	Pin Dia.	Material Thickness
161-091-000	10-32	1/4″	1/4″
161-093-002	1/4-28	1/4″	1/4″
161-093-003	1/4-28	1/4″	5/16″

Wire Stop/Pivot

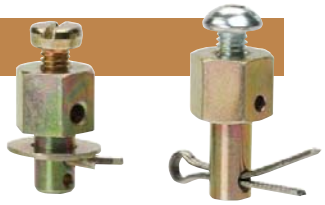

Part Number	Wire	Pin Dia.	Material Thickness	Set Screw
160-450-001	.075	1/4″	3/16″	10-32 UNF
160-450-002	.075	1/4″	5/16″	10-32 UNF

Wire Stop

Part Number	Hole Size	Set Screw
156-416-001	.138″	8-31 UNC Hex Socket
156-416-002	.093″	8-32 UNC Hex Socket
160-429-001	.138″	8-32 UNC Slotted
160-429-002	.093″	8-32 UNC Slotted

U-Bolts (furnished with 2 hex nuts)

Part Number	From (Internal)	To (External)
161-010-001	10-32 UNF	VLD
161-010-002	1/4-28	LD
161-010-003	5/16-24	MD
161-010-004	3/8-24	HD

All line art dimensions are represented in inches

TUTHILL Controls Group

Cablecraft®

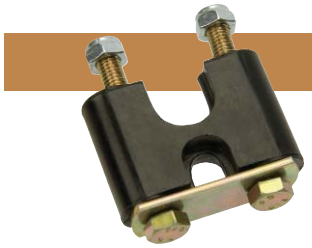

VLD/LD Mounting (fits grooved conduit fitting)

Part Number
ST3652

Strap Clamps and Shims

Use With	Strap	Shim
VLD	161-011-001	175-435-050
LD	161-011-002	175-435-051

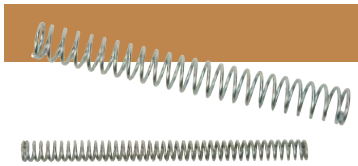

Compression Springs (for brake cables)

Part Number	Inside Dia.	Outside Dia.	Length	Solid Height	Spring Rate
175-923-001	.30	.437	12.0	4.60	3.93 lb/inch
175-923-002	.30	.437	6.4	3.20	5.75 lb/inch
175-923-006	.30	.437	5.7	2.87	6.23 lb/inch
175-923-001	.26	.437	10.0	6.62	15.97 lb/inch
175-923-003	.40	.500	4.3	1.00	4.47 lb/inch

Bellows (trim to length)

Part Number	For Use With Cable Size	Compressed Length	Extended Length	Max Travel
175-522-001	VLD	3.0″	8.0	6.0″
175-524-002	LD	3.4″	9.7	6.0″
175-525-001	MD	4.5″	11.3	6.0″

Maximum recommended is shown.
Must be trimmed shorter for use on shorter travel cables.
See cutting matrix #CC-111. Adapter rings to mount bellows to conduit fittings.

Adapter Ring

Part Number	For Use With Cable Size
175-435-072	VLD
175-435-081	LD
175-435-082	MD

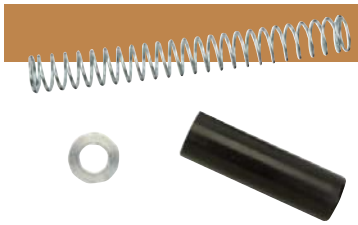

Spring Return Kit

Convert any LD size, 2″ travel threaded swivel end to spring loaded to extended position.
Force with end rod extended - 4.6 lb
Force with end rod retracted - 15.2 lb

Part Numbers	
Spring	175-930-00
Collar	175-435-118
Outer Guide	160-071-025

Umbrella Seal

Part Number	For Use With Cable Size
160-071-005	VLD, 2″
160-071-006	VLD, 3″
160-071-007	VLD, 4″
160-071-008	LD, 2″
160-071-009	LD, 3″
160-071-010	LD, 4″
160-071-011	MD, 2″
160-071-012	MD, 3″
160-071-013	MD, 4″

All line art dimensions are represented in inches

Knobs/Handles

Part Number	Type	Thread Size
165-183-001	PTO	1/4-28
165-183-002	PTO	1/4-20
165-183-003	PTO	5/16-18
165-183-004	PTO	5/16-24
165-103-001	2″ Mushroom	1/4-28
165-103-002	2″ Mushroom	1/4-20
165-103-004	2″ Mushroom	3/8-24
165-103-006	2″ Mushroom	5/16-18
165-038-124	2″ Mushroom	1/2-13
165-038-106	1-3/8″ dia. x 4-3/8″ tall	1/2-13
165-172-201	3-1/2″ Aluminum T	1/4-20
165-172-202	3-1/2″ Aluminum T	1/4-28
165-172-203	3-1/2″ Aluminum T	5/16-28
165-172-206	3-1/2″ Alum./Black T	1/4-20
300-057-008	3-1/2″ Alum. Twist Lock T	N/A

Hydroback

Part Number	Travel	Spring Force at Center	For Use With Cable Size
165-073-210	2″	10 lb	LD
165-073-220	2″	20 lb	LD
165-073-310	3″	10 lb	LD
165-073-320	3″	20 lb	LD
165-072-210	2″	10 lb	MD
165-072-220	2″	20 lb	MD
165-072-310	3″	10 lb	MD
165-072-320	3″	20 lb	MD

Spool Valve Adapters - Open Style Mount

Part Number	For Use On
185-101-001	Comm. Shearing 505
185-101-002	Comm. Shearing D50
185-101-003	Comm. Shearing A35
185-101-004	Comm. Shearing A20
185-101-005	Comm. Shearing VA20
185-101-006	Husco 6000
185-101-007	Husco 7120
185-101-008	Gresen V20, V31P, V42, CP, CT, CPT, CS, 25P, 25PK

Modulator Assemblies and Replacement Cables

	MODULATOR UNIT WITH CABLE		
Cable Output End	Pull To Operate	Push To Operate	Cable Only
A. Grooved Mount			
173 Utility	CA 343-3-001-L	CA 343-3-002-L	CA 343-3-L
174 Utility	CA 343-4-001-L	CA 343-4-002-L	CA 343-4-L
B. Threaded Mount			
173 Utility	CA 341-3-001-L	CA 341-3-002-L	CA 341-3-L
174 Utility	CA 341-4-001-L	CA 341-4-002-L	CA 341-4-L

REPLACEMENT CABLES ONLY FOR OTHER USA MANUFACTURED MODULATORS

Cable Output End	173 Utility	174 Utility
Grooved Mount	CA 213 G-L	CA 214 G-L
Threaded Mount	CA 213 T-L	CA 214 G-L

All line art dimensions are represented in inches

TUTHILL Controls Group

Cablecraft®

Clevises/Safety Fasteners/Pins

Applications:

- Lawn and garden
- Construction
- Agriculture

Features:

- Low carbon steel for economical design
- Machined clevis style for higher precision fit and appearance
- Offered in both metric and inch
- Both metric and inch are available in RH & LH versions
- Multiple style retaining clips available
- Similar to DIN 71 752 (metric)

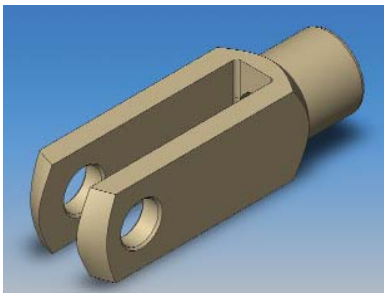

Material:

- **Clevises -** Low Carbon Steel, Zinc Plated, Yellow Dichromate Treated
- **Safety Fasteners -** Retaining Clips: Hardened Spring Steel, Zinc Plated, Yellow Dichromate Treated

  Spring Clip: Low Carbon Steel Pin and Spring Steel Snap, Zinc Plated, Yellow Dichromate Treated
- **Pins -** Low Carbon Steel, Zinc Plated, Yellow Dichromate Treated

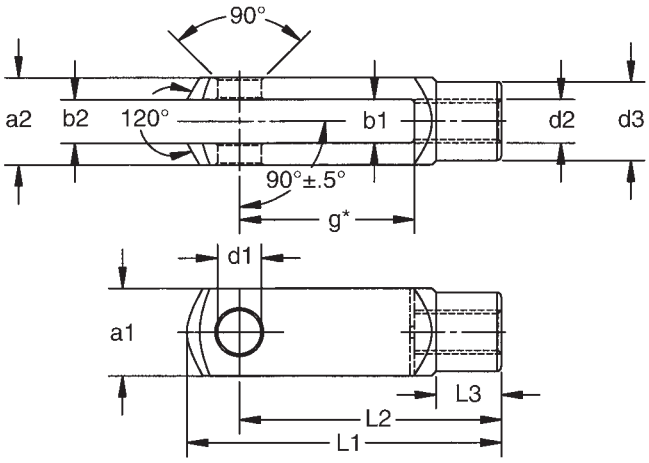

TXLC — Clevises Chart

Part No.	THREAD SIZE	d2 THREAD PITCH	a1 REF	a2 REF	d1 +.002 -.000	b1 +.020 -.000	b2 LIMIT DEVIATION	g ±.020	L1 ±.020	L2		L3 ±.012	d3 ±.012
TXLC187	#10	32	.375		.1875	.1875	+.020 -.000	.394	1.024	.788	±.012	.295	.354
TXLCL187								.787	1.417	1.181			
TXLC250	1/4	28	.500		.250	.250		.472	1.220	.944		.354	.394
TXLCL250								.945	1.693	1.417			
TXLC312	5/16	24	.625		.3125	.3125		.630	1.654	1.260		.472	.551
TXLCL312								1.260	2.283	1.890			
TXLC375	3/8	24	.750		.375	.375		.787	2.047	1.575	±.016	.591	.708
TXLCL375								1.575	2.834	2.361			
TXLC500	1/2	20	1.000		.500	.500	+.028 -.006	1.102	2.834	2.205		.886	.945
TXLCL500								2.205	3.976	3.307			

All line art dimensions are represented in inches

TXLM — Clevis Pin Safety Clip Chart

Part No.	B	C	D	F REF	G	H	h1 REF
TXLM187	.355	.195	.084	.016	.429	.152 / .144	.112
TXLM250	.437	.245	.130	.020	.562	.205 / .197	.165
TXLM312	.551	.315	.138	.020	.679	.252 / .244	.212
TXLM375	.710	.385	.211	.020	.844	.313 / .305	.265
TXLM500	1.000	.520	.263	.024	1.200	.400 / .392	.352

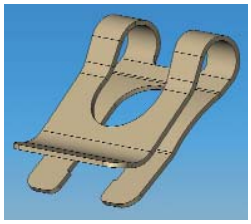

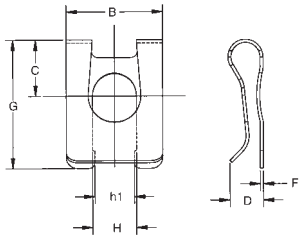

TXLK — Clevis Pin Retaining Clip Chart

Part No.	B	C	D	F REF	f ±10	G	H	h1 REF
TXLM187	.267	.169	.102	.015	.027	.275	.148 / .140	.105 / .082
TXLM250	.303	.204	.110	.019	.035	.330	.201 / .193	.190 / .114
TXLM312	.417	.267	.137	.019	.035	.460	.248 / .240	.119 / .143
TXLM375	.452	.291	.157	.019	.035	.464	.309 / .301	.152 / .176
TXLM500	.610	.374	.196	.023	.047	.625	.396 / .388	.206 / .230

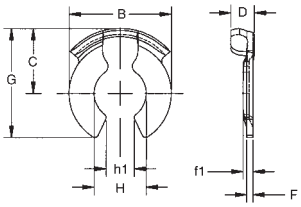

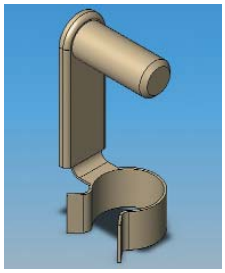

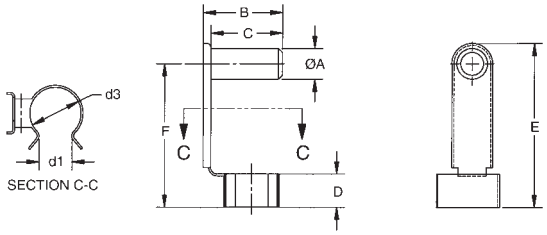

TXLSP — Clevis Spring Pins Chart

Part No.	A	B	C +.3 / -.16	D	E	F	d1	d3 REF
TXLSP187 TXLSPL187	.1875 / .1855	.49	.43	.22	.90 1.30	.75 1.14	.177 / .138	.354
TXLSP250 TXLSPL250	.250 / .247	.64	.56	.25	1.10 1.57	.90 1.38	.212 / .166	.394
TXLSP312 TXLSPL312	.3125 / .3095	.79	.70	.31	1.43 2.05	1.18 1.81	.283 / .221	.551
TXLSP375 TXLSPL375	.375 / .372	.95	.83	.39	1.77 2.56	1.50 2.28	.354 / .278	.708
TXLSP500 TXLSPL500	.500 / .497	1.21	1.09	.55	2.44 3.58	2.05 3.23	.531 / .416	.945

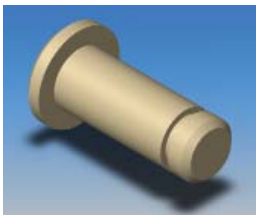

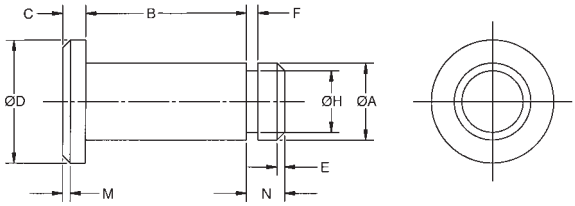

TXLP — Clevis Pins Chart

Part No.	ØA	B +.3 / -0	C ±.3	ØD STK	E	F	ØH	M	N
TXLP187	.1870 / .1855	.405 / .395	.050	.250	.020	.028 / .020	.140 / .132	.020	.095 / .090
TXLP250	.2495 / .2470	.530 / .520	.062	.343	.030	.034 / .026	.193 / .185	.030	.115 / .110
TXLP312	.3120 / .3095	.655 / .645	.078	.437	.040	.041 / .033	.240 / .232	.040	.135 / .130
TXLP375	.3745 / .3720	.780 / .770	.090	.500	.040	.045 / .037	.301 / .285	.050	.172 / .167
TXLP500	.4995 / .4970	1.030 / 1.020	.110	.625	.050	.054 / .046	.388 / .372	.060	.213 / .208

All line art dimensions are represented in inches

TUTHILL Controls Group

Cablecraft®

Tuthill Controls Group Industrial Linkages

Tuthill Controls Group is the leading designer and manufacturer of motion transfer components and a long time leader in rod ends, ball joints and custom linkages. Suitable for many mechanical motion transfer applications, our rod ends can be used in a wide range of operating temperatures. Studded and right or left-handed thread versions are available. Grease fittings are optional on some sizes.

Ball joints from Tuthill Controls are also suitable for applications in a wide temperature range. Metal to metal, integral ball joints, plastic ball joints or quick disconnect solutions are available.

Tuthill Controls also provides complete motion transfer assemblies or sub-assemblies to fit your application requirements. Standard products and custom-engineered solutions. Tuthill Controls rod ends and ball joints are found in the following applications & markets:

- Tie Rods
- Drag Links
- Steering Controls
- Operator Controls
- Printing & Labeling Equipment
- Hydraulic/Pneumatic Cylinder Ends
- Food Processing
- Door Mechanisms
- Conveying Equipment

Remember to have this information ready whenever possible:

- Diameter (thread size) of the product?
- Race construction: 2-piece, molded nylon, bronze?
- Body & ball material: Low carbon or stainless steel?
- Male or female threads, right hand or left hand?
- Plain or with an optional stud?

It helps to have this additional information:

- What is the application?
- Load info: actual working load?
- Conditions/environment: Dirt, heat, cold, moisture, etc?
- If available, part number?
- Usage quantity?

TUTHILL Controls Group®
Cablecraft®

Technical/Application Data

Tuthill Control Group's (TCG) engineering staff possesses the expertise to provide advice and guidelines regarding nearly all motion transmission applications.

There are several factors pertaining to engineering application, including correct installation, that should be taken into consideration to insure optimum performance of your chosen linkage components.

1. When mounting ball studs, the hex mounting portion should be properly tightened and flat against its mating surface. Adequate countersinks, counterbores or washers may be necessary to provide a tight, flush joint. Installation torque values for tightening must be within the capacity of the linkage component or breakage may occur from over-tightening. Consult TCG's engineering staff or refer to an appropriate engineering standard for mounting nut torque values associated with each grade of threaded fastener. Looseness in the threaded joint or mounting surface may cause abnormal wear and early failure of the linkage component.

2. When mounting rod ends, care should be used in tightening a fastener against the ball to prevent distortion. The same torque requirements that apply to threaded fasteners also apply to securing the rod end spherical ball. The plated ball may become chipped or distorted by excessive clamping pressure, resulting in increased torque, wear, and premature failure of the rod end.

3. In applications involving vibration where loosening of the linkage components may occur, self-locking nuts or lockwashers should be used to secure the components and prevent loosening. Looseness in the threaded joint or mounting surface may cause abnormal wear and early failure of the linkage component.

4. Ball joints and rod end bearings should be mounted in such a way as to best utilize the design of the joint with respect to gravitational force. For example, a ball joint should be mounted with the housing member on top of the ball stud. Mounting the housing component with it's weight and linkage hanging from the ball or ball stud could accelerate wear and lead to detachment of linkage components and sudden loss of control.

5. It is recommended that a separate stop be incorporated in the linkage system to eliminate the possibility of exceeding the misalignment capability of the ball joint or rod end bearing. An overtravel condition of this type may result in breakage and detachment of the ball joint or rod end components and sudden loss of control.

6. TCG ball joints and rod end bearings are manufactured to commercial standards. If you have questions concerning a particular product for your application, TCG can offer assistance; however, it is the end user's responsibility to determine if the chosen part is suitable for a specific application (especially true where safety is a factor).

7. To determine a part's useful life for a particular application, you should test sample parts under actual operating conditions.

Load Definitions

Ultimate Radial Static Load Capacity

These loads are the maximum amount of force the part can sustain before complete failure. All loads listed in the catalog are based on rod ends without grease fittings. Due to the removal of material for the fitting, the load rating for such a part is substantially lower. Consult TCG engineering for assistance on these parts.

Radial Static Load Capacity

These loads are the maximum amount of force the part can sustain before a 2% permanent set occurs in the part. Consult TCG engineering if these numbers don't fit your application.

Static Limit Load

Static limit load is the allowable load that can be applied to a bearing without adversely affecting its performance capabilities.

Rod End Keyway (Ref NAS 559)

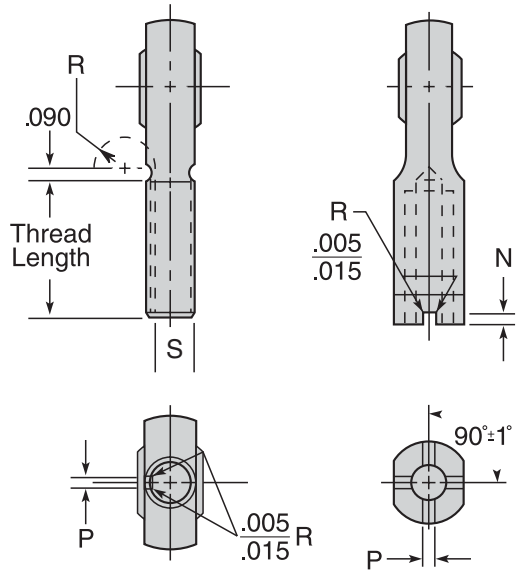

THREAD OD REF	Dimensions in Inches N MAX.	P MIN.	N MAX.	P MIN.
.2500	.056	.062	.201	.255
.3125	.056	.062	.260	.255
.3750	.056	.093	.311	.255
.4375	.069	.093	.370	.255
.5000	.069	.093	.436	.255
.5620	.077	.125	.478	.255
.6250	.077	.125	.541	.255
.7500	.077	.125	.663	.255
.8750	.086	.156	.777	.318
1.0000	.094	.156	.900	.318
1.1250	.094	.094	1.010	.382
1.2500	.116	.187	1.136	.382
1.3750	.116	.187	1.236	.445
1.5000	.116	.250	1.361	.445
1.6250	.129	.250	1.477	.445
1.7500	.129	.250	1.589	.508
1.8750	.129	.312	1.714	.508
2.0000	.129	.312	1.839	.508
2.1250	.129	.312	1.955	.508
2.2500	.129	.312	2.080	.508

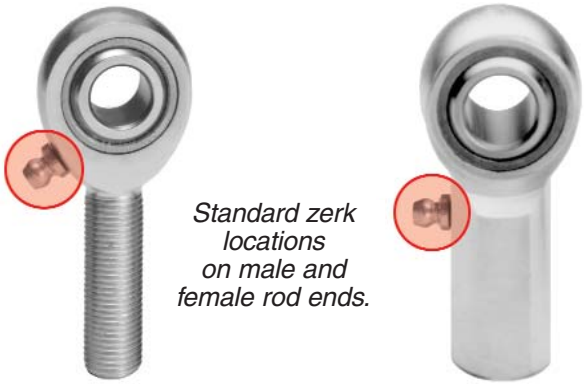

Standard zerk locations on male and female rod ends.

Standard Drive Fit Zerk

Specify by adding suffix "Z" to part number.

Example: MSF8Z

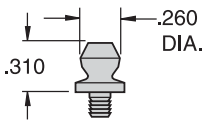

Standard Threaded Zerk

Specify by adding suffix "-28" to part number.

Example: MSF8Z-28

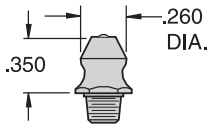

Metric Zerk

Specify by adding suffix "ZM" to part number.

Example: MSF8ZM

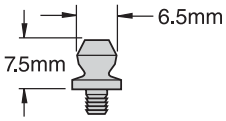

Note: Zerks not available on 3/8" or 10mm and smaller rod ends.

Rod Ends/Ball Joints: Specifying Tips

Each of our products is specifically designed to perform in even the most extreme conditions. Through this technical guide and the advice of our sales and engineering staff, our goal is to help you identify the most appropriate Tuthill product suited to your application. First, a few key considerations…

While the applications are almost limitless, the conditions that the different linkages witness are often very similar. **When designing a linkage solution, keep in mind everything from environmental conditions (humidity, dust & temperature) to the range of motion required.**

- For example: Rod ends and ball joints are not designed for high rate rotational applications such as holding rotating shafts. However, when repetitive motion is present, one of TCG's many **self-lubricated bearings (such as nylon, bronze or PTFE lined race bearings)** should be considered. Our comprehensive catalog provides individual product pages that identify key features such as temperature restraints and descriptions of strength for each product.
- **When environmental conditions involving excessive dirt exist, our nylon race bearings** help keep the cavity free of excessive dirt build-up (a great alternative to the "tough to reach linkage and often-neglected grease fitting" applications).
- Additionally TCG provides many **specialty alloy designs** to prevent corrosion and increase strengths.

Why choose a ball joint instead of a rod end? While ball joints are often considered the more economical solution, there are also many cases in which a ball joint is better suited for performance and geometry-based applications. TCG ball joints come in many forms aside from designs in the catalog. A popular and flexible design option includes our 1-piece solid and bent linkages (as seen on many draglinks and tie rods in the lawn and garden industry). The integral ball joint placed directly in the connecting rod creates a low profile linkage that is optimal for minimal clearance applications such as steering and other internal machine controls.

What sets TCG apart from other rod end and ball joint manufacturers? TCG not only designs all of our rod ends, ball joints and sphericals, but also manufactures them in the USA. Since 1920, we have been creating and developing many of the critical and revolutionary methods to manufacture linkages. This has put us in the forefront of product offerings, and to this day we continue to strive to offer the best product, the best delivery and the best value to our customers. Call 260-749-5105 when you need product/technical engineering support.

WARNING!

Since the manufacturer is unable to determine all applications in which a part may be placed, it is the user's responsibility to determine the suitability of the part for its intended use. This is especially true where safety is a factor. Incorrect application or installation may result in property damage, bodily injury, or death. For technical assistance, call 260-749-5105.

SPM/SPF Rod Ends

Molded Race, Self-Lubricating

Applications:

Numerous mechanical motion transfer devices/applications, including:

- Construction equipment
- Recreational vehicles (ATV's, golf carts, etc.)
- Truck/off highway

Features:

- Nylon molded raceway delivers self-lubricating low friction and moisture-resistant performance
- Good wear resistance
- Design allows for control of breakaway torque, adding to its application versatility
- Can be used in a wide range of temperatures: -30°F — 220°F (-34°C — 104°C)
- Offered in studded and right or left-handed versions
- Custom assemblies can be built to your specifications
- Meets SAE spec J1120

Material:

- **Ball -** Low Carbon Steel, Case Hardened Zinc Plated, Yellow Dichromate Treated
- **Body -** Low Carbon Steel Zinc Plated, Yellow Dichromate Treated
- **Race -** Molded Self-Lubricating Reinforced Nylon

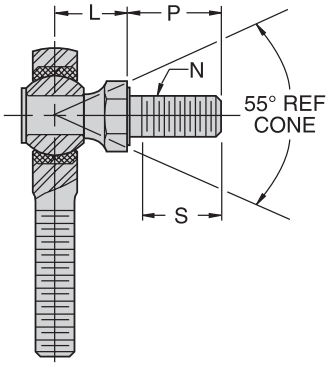

Studded Dimensions

Rod End Bore Size	L REF	P ± .030	S Min. Thread Length	N Thread Size UNF-2A
3/16″	.437	.438	.375	10-32
1/4″	.469	.563	.500	1/4-28
5/16″	.531	.688	.594	5/16-24
3/8″	.625	.875	.781	3/8-24
7/16″	.844	1.062	.937	7/16-20
1/2″	.875	1.125	1.000	1/2-20
5/8″	1.000	1.125	1.000	5/8-18
3/4″	1.187	1.812	1.625	3/4-16

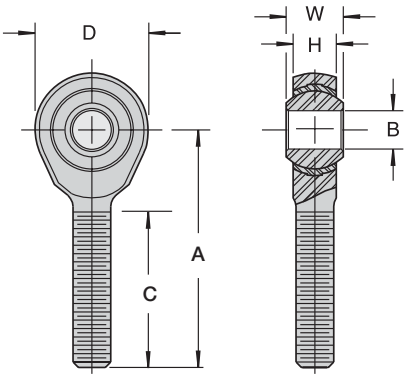

SPM Male Chart

Part Number		B +.0020 -.0000	W ±.005	H REF	A ±.015	D ± .015	REF	C ± .060	UNF-2A	Ultimate Radial Static Load Capacity (Pounds)	Weight (Pounds)
Right Hand	Left Hand	Ball Bore	Ball Width	Housing Width	Centerline Length	Head Diameter	Ball Diameter	Thread Length	Thread Size		
SPM3	**SPML3**	.1900	.312	.250	1.250	.625	.438	.750	10-32	1,210	.023
SPM4	**SPML4**	.2500	.375	.281	1.562	.750	.516	1.000	1/4-28	2,470	.040
SPM5	**SPML5**	.3125	.437	.344	1.875	.875	.625	1.250	5/16-24	2,740	.071
SPM6	**SPML6**	.3750	.500	.406	1.937	1.000	.719	1.250	3/8-24	4,210	.107
SPM7	**SPML7**	.4375	.562	.437	2.125	1.125	.812	1.312	7/16-20	5,350	.148
SPM8	**SPML8**	.5000	.625	.500	2.437	1.312	.938	1.500	1/2-20	6,430	.232
SPM10	**SPML10**	.6250	.750	.562	2.625	1.500	1.125	1.625	5/8-18	8,300	.364
SPM12	**SPML12**	.7500	.875	.687	2.875	1.750	1.312	1.750	3/4-16	10,900	.568

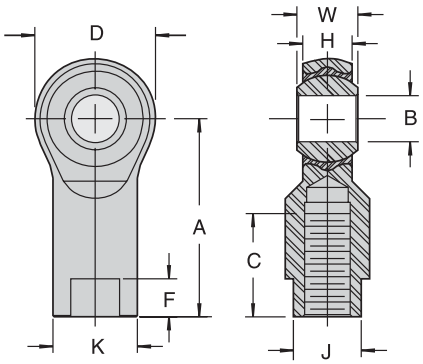

SPF Female Chart

Part Number		B +.0020 -.0000	W ±.005	H REF	A ±.015	D ± .015	K ± .015	J ± .015	F ± .030	REF	C ± .060	UNF-2B	Ultimate Radial Static Load Capacity (Pounds)	Weight (Pounds)
Right Hand	Left Hand	Ball Bore	Ball Width	Housing Width	Centerline Length	Head Diameter	Shank Diameter	Wrench Flat Width	Wrench Flat Length	Ball Diameter	Thread Length	Thread Size		
SPF3	**SPFL3**	.1900	.312	.250	1.062	.625	.406	.312	.406	.438	.562	10-32	1,210	.036
SPF4	**SPFL4**	.2500	.375	.281	1.312	.750	.469	.375	.281	.516	.750	1/4-28	2,470	.059
SPF5	**SPFL5**	.3125	.437	.344	1.375	.875	.500	.437	.281	.625	.750	5/16-24	2,740	.077
SPF6	**SPFL6**	.3750	.500	.406	1.625	1.000	.687	.562	.312	.719	.937	3/8-24	4,100	.146
SPF7	**SPFL7**	.4375	.562	.437	1.812	1.125	.750	.625	.625	.812	1.031	7/16-20	5,350	.192
SPF8	**SPFL8**	.5000	.625	.500	2.125	1.312	.875	.750	.375	.938	1.187	1/2-20	6,430	.313
SPF10	**SPFL10**	.6250	.750	.562	2.500	1.500	1.000	.875	.500	1.125	1.500	5/8-18	8,300	.464
SPF12	**SPFL12**	.7500	.875	.687	2.875	1.750	1.125	1.000	1.000	1.312	1.562	3/4-16	10,900	.672

Chart Notes: This series is also available in a studded configuration. Specify by adding "S" to suffix. Example: SPF8S

SSPM/SSPF Rod Ends

Stainless Steel, Molded Race, Self-Lubricating

Applications:

Numerous mechanical motion transfer devices/applications, including:

- Marine
- Construction equipment
- Recreational vehicles (ATV's, golf carts, etc.)
- Truck/off highway

Features:

- Stainless steel construction for extra corrosion protection
- Nylon molded race delivers self-lubricating low friction and moisture-resistant performance
- Good wear resistance
- Design allows for control of breakaway torque, adding to its application versatility
- Can be used in a wide range of temperatures: -30°F — 220°F (-34°C — 104°C)
- Offered in studded and right or left-handed versions
- Custom assemblies can be built to your specifications
- Meets SAE spec J1120

Material:

- **Ball -** Stainless Steel
- **Body -** Stainless Steel
- **Race -** Molded Self-Lubricating Reinforced Nylon
- **Stud (optional) -** Stainless Steel

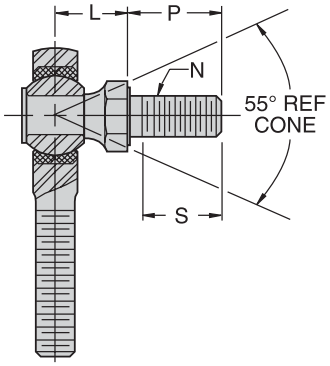

Studded Dimensions

Rod End Bore Size	L REF	P ± .030	S Min. Thread Length	N Thread Size UNF-2A
3/16″	.437	.438	.375	10-32
1/4″	.469	.563	.500	1/4-28
5/16″	.531	.688	.594	5/16-24
3/8″	.625	.875	.781	3/8-24
7/16″	.844	1.062	.937	7/16-20
1/2″	.875	1.125	1.000	1/2-20
5/8″	1.000	1.125	1.000	5/8-18
3/4″	1.187	1.812	1.625	3/4-16

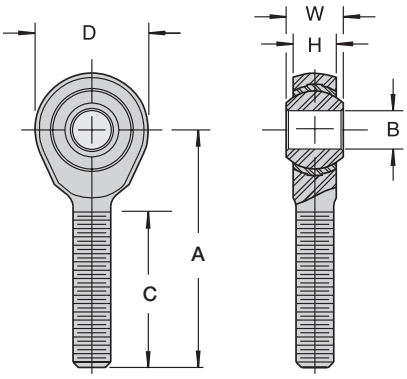

SSPM Male Chart

Part Number		B +.0020 -.0000	W ±.005	H REF	A ±.015	D ± .015	REF	C ± .060	UNF-2A	Ultimate Radial Static Load Capacity (Pounds)	Weight (Pounds)
Right Hand	Left Hand	Ball Bore	Ball Width	Housing Width	Centerline Length	Head Diameter	Ball Diameter	Thread Length	Thread Size		
SSPM3	**SSPML3**	.1900	.312	.250	1.250	.625	.438	.750	10-32	1,210	.023
SSPM4	**SSPML4**	.2500	.375	.281	1.562	.750	.516	1.000	1/4-28	2,470	.040
SSPM5	**SSPML5**	.3125	.437	.344	1.875	.875	.625	1.250	5/16-24	2,740	.071
SSPM6	**SSPML6**	.3750	.500	.406	1.937	1.000	.719	1.250	3/8-24	4,210	.107
SSPM7	**SSPML7**	.4375	.562	.437	2.125	1.125	.812	1.312	7/16-20	5,350	.148
SSPM8	**SSPML8**	.5000	.625	.500	2.437	1.312	.938	1.500	1/2-20	6,430	.232
SSPM10	**SSPML10**	.6250	.750	.562	2.625	1.500	1.125	1.625	5/8-18	8,300	.364
SSPM12	**SSPML12**	.7500	.875	.687	2.875	1.750	1.312	1.750	3/4-16	10,900	.568

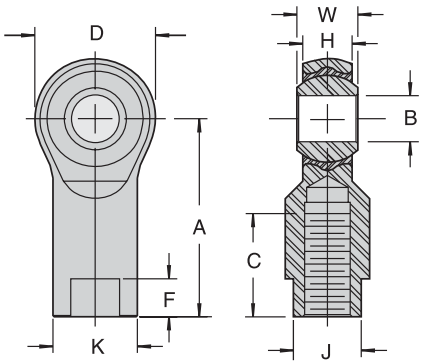

SSPF Female Chart

Part Number		B +.0020 -.0000	W ±.005	H REF	A ±.015	D ± .015	K ± .015	J ± .015	F ± .030	REF	C ± .060	UNF-2B	Ultimate Radial Static Load Capacity (Pounds)	Weight (Pounds)
Right Hand	Left Hand	Ball Bore	Ball Width	Housing Width	Centerline Length	Head Diameter	Shank Diameter	Wrench Flat Width	Wrench Flat Length	Ball Diameter	Thread Length	Thread Size		
SSPF3	**SSPFL3**	.1900	.312	.250	1.062	.625	.406	.312	.406	.438	.562	10-32	1,210	.036
SSPF4	**SSPFL4**	.2500	.375	.281	1.312	.750	.469	.375	.281	.516	.750	1/4-28	2,470	.059
SSPF5	**SSPFL5**	.3125	.437	.344	1.375	.875	.500	.437	.281	.625	.750	5/16-24	2,740	.077
SSPF6	**SSPFL6**	.3750	.500	.406	1.625	1.000	.687	.562	.312	.719	.937	3/8-24	4,100	.146
SSPF7	**SSPFL7**	.4375	.562	.437	1.812	1.125	.750	.625	.625	.812	1.031	7/16-20	5,350	.192
SSPF8	**SSPFL8**	.5000	.625	.500	2.125	1.312	.875	.750	.375	.938	1.187	1/2-20	6,430	.313
SSPF10	**SSPFL10**	.6250	.750	.562	2.500	1.500	1.000	.875	.500	1.125	1.500	5/8-18	8,300	.464
SSPF12	**SSPFL12**	.7500	.875	.687	2.875	1.750	1.125	1.000	1.000	1.312	1.562	3/4-16	10,900	.672

Chart Notes: This series is also available in a studded configuration. Specify by adding "S" to suffix. Example: SSPF8S

EM/EF Rod Ends

Commercial, 2-Piece, Metal to Metal

Applications:

Numerous mechanical motion transfer devices/applications, including:

- Construction equipment
- Lawn and garden
- Truck/bus

Features:

- 2-piece metal to metal design offers our most economical option
- Suited for higher axial load where side loading strength is critical
- Can be used in a wide range of temperatures: -65°F — 250°F (-54°C — 121°C)
- Offered in studded and right or left-handed versions
- Custom assemblies can be built to your specifications
- Meets SAE spec J1120

Material:

- **Ball -** Low Carbon Steel, Case Hardened Zinc Plated, Yellow Dichromate Treated
- **Body -** Low Carbon Steel Zinc Plated, Yellow Dichromate Treated

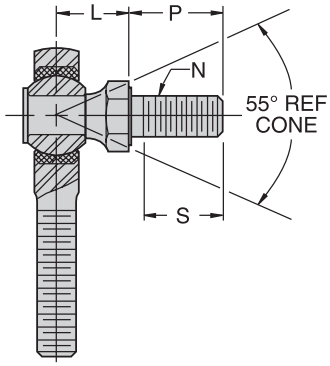

Studded Dimensions

Rod End Bore Size	L REF	P ± .030	S Min. Thread Length	N Thread Size UNF-2A
1/4″	.469	.563	.500	1/4-28
5/16″	.531	.688	.594	5/16-24
3/8″	.625	.875	.781	3/8-24
1/2″	.875	1.125	1.000	1/2-20
5/8″	1.000	1.125	1.000	5/8-18

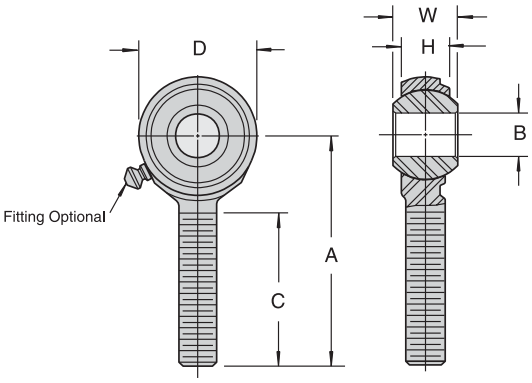

EM Chart

Part Number		B +.0020 -.0000	W ±.005	H REF	A ±.015	D ± .015	REF	C ± .060	UNF-2A	Ultimate Radial Static Load Capacity (Pounds)	Weight (Pounds)
Right Hand	Left Hand	Ball Bore	Ball Width	Housing Width	Centerline Length	Head Diameter	Ball Diameter	Thread Length	Thread Size		
EM4	**EML4**	.2500	.375	.281	1.562	.750	.516	1.000	1/4-28	2,510	.043
EM5	**EML5**	.3125	.437	.344	1.875	.875	.625	1.250	5/16-24	3,430	.073
EM6	**EML6**	.3750	.500	.406	1.937	1.000	.719	1.250	3/8-24	5,520	.110
EM8	**EML8**	.5000	.625	.500	2.437	1.312	.938	1.500	1/2-20	8,690	.240
EM10	**EML10**	.6250	.750	.562	2.625	1.500	1.125	1.625	5/8-18	10,300	.368

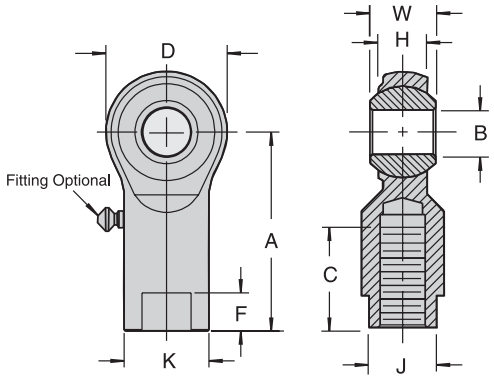

EF Chart

Part Number		B +.0020 -.0000	W ±.005	H REF	A ±.015	D ± .015	K ± .015	J ± .015	F ± .030	REF	C ± .060	UNF-2B	Ultimate Radial Static Load Capacity (Pounds)	Weight (Pounds)
Right Hand	Left Hand	Ball Bore	Ball Width	Housing Width	Centerline Length	Head Diameter	Shank Diameter	Wrench Flat Width	Wrench Flat Length	Ball Diameter	Thread Length	Thread Size		
EF4	**EFL4**	.2500	.375	.281	1.312	.750	.469	.375	.250	.516	.687	1/4-28	3,470	.062
EF5	**EFL5**	.3125	.437	.344	1.375	.875	.500	.437	.281	.625	.687	5/16-24	4,680	.081
EF6	**EFL6**	.3750	.500	.406	1.625	1.000	.687	.562	.312	.719	.812	3/8-24	5,520	.152
EF8	**EFL8**	.5000	.625	.500	2.125	1.312	.875	.750	.375	.938	1.187	1/2-20	9,460	.324
EF10	**EFL10**	.6250	.750	.562	2.500	1.500	1.000	.875	.500	1.125	1.406	5/8-18	10,300	.473

Chart Notes: 1. For standard lubrication fitting, add "Z" to suffix. Example: EM10Z 2. Zerks not available on 3/8" or 10mm and smaller rod ends. 3. This series is also available in a studded configuration. Specify by adding "S" to suffix. Example: EM10S

MBM/MBF Rod Ends

4-Piece, Bronze Race, Oil Impregnated

Applications:

Numerous precision mechanical motion transfer devices/applications, including:

- Industrial equipment
- Precision machinery

Features:

- Oil impregnated bronze raceway delivers longer wear life and lowers maintenance cost (high precision, frictionless performance)
- Can be used in a wide range of temperatures: -30°F — 300°F (-34°C — 149°C)
- Offered in studded and right or left-handed versions
- Custom assemblies can be built to your specifications
- Meets SAE spec J1120

Material:

- **Ball -** Low Carbon Steel, Case Hardened Zinc Plated, Yellow Dichromate Treated
- **Body -** Low Carbon Steel, Zinc Plated, Yellow Dichromate Treated
- **Race -** Sintered Phosphor Bronze, Oil Impregnated

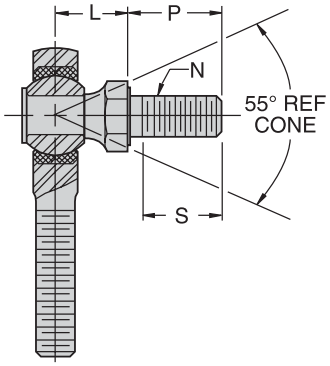

Studded Dimensions

Rod End Bore Size	L REF	P ± .030	S Min. Thread Length	N Thread Size UNF-2A
3/16″	.437	.438	.375	10-32
1/4″	.469	.563	.500	1/4-28
5/16″	.531	.688	.594	5/16-24
3/8″	.625	.875	.781	3/8-24
7/16″	.844	1.062	.937	7/16-20
1/2″	.875	1.125	1.000	1/2-20
5/8″	1.000	1.125	1.000	5/8-18
3/4″	1.187	1.812	1.625	3/4-16

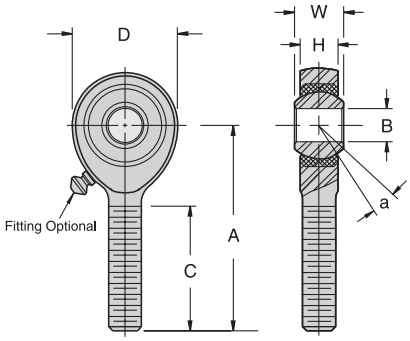

MBM Chart

Part Number		B +.0025 -.0005	W +.000 -.005	H ± .015	A ± .015	D ± .010	REF	C +.062 -.031	UNF-3A	a°	Ultimate Radial Static Load Capacity (Pounds)	Weight (Pounds)
Right Hand	Left Hand	Ball Bore	Ball Width	Housing Width	Centerline Length	Head Diameter	Ball Diameter	Thread Length	Thread Size	Misalign Angle		
MBM3	**MBML3**	.1900	.312	.250	1.250	.625	.437	.750	10-32	13	1,169	.028
MBM4	**MBML4**	.2500	.375	.281	1.562	.750	.500	1.000	1/4-28	16	2,158	.043
MBM5	**MBML5**	.3125	.437	.344	1.875	.875	.625	1.250	5/16-24	14	2,784	.072
MBM6	**MBML6**	.3750	.500	.406	1.938	1.000	.719	1.250	3/8-24	12	3,915	.112
MBM7	**MBML7**	.4375	.562	.437	2.125	1.125	.812	1.375	7/16-20	14	4,218	.160
MBM8	**MBML8**	.5000	.625	.500	2.438	1.312	.937	1.500	1/2-20	12	6,660	.249
MBM10	**MBML10**	.6250	.750	.562	2.625	1.500	1.125	1.625	5/8-18	16	7,364	.382
MBM12	**MBML12**	.7500	.875	.687	2.875	1.750	1.312	1.750	3/4-16	14	11,518	.602

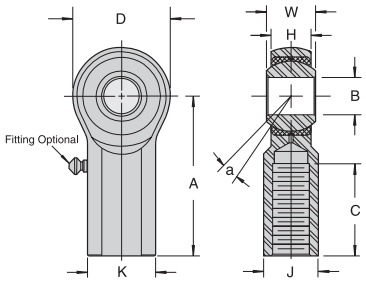

MBF Chart

Part Number		B +.0025 -.0005	W +.000 -.005	H ± .015	A ± .015	D ± .010	K ± .010	J ± .010	REF	C +.062 -.031	UNF-2B	a°	Ultimate Radial Static Load Capacity (Pounds)	Weight (Pounds)
Right Hand	Left Hand	Ball Bore	Ball Width	Housing Width	Centerline Length	Head Diameter	Shank Diameter	Wrench Flat	Ball Diameter	Thread Length	Thread Size	Misalign Angle		
MBF3	**MBFL3**	.1900	.312	.250	1.062	.625	.406	.312	.437	.500	10-32	13	1,531	.038
MBF4	**MBFL4**	.2500	.375	.281	1.312	.750	.469	.375	.500	.687	1/4-28	16	2,539	.059
MBF5	**MBFL5**	.3125	.437	.344	1.375	.875	.500	.437	.625	.687	5/16-24	14	3,133	.092
MBF6	**MBFL6**	.3750	.500	.406	1.625	1.000	.687	.562	.719	.812	3/8-24	12	3,915	.152
MBF7	**MBFL7**	.4375	.562	.437	1.812	1.125	.750	.625	.812	.937	7/16-20	14	4,218	.198
MBF8	**MBFL8**	.5000	.625	.500	2.125	1.312	.875	.750	.937	1.062	1/2-20	12	6,660	.329
MBF10	**MBFL10**	.6250	.750	.562	2.500	1.500	1.000	.875	1.125	1.375	5/8-18	16	7,364	.477
MBF12	**MBFL12**	.7500	.875	.687	2.875	1.750	1.125	1.000	1.312	1.562	3/4-16	14	11,518	.723

Chart Notes: 1. For standard lubrication fitting, add "Z" to suffix. Example: MBM10Z 2. Zerks not available on 3/8" or 10mm and smaller rod ends.
3. This series is also available in a studded configuration. Specify by adding "S" to suffix. Example: MBM10S

R-G Ball Joints

Steel Housing, Staked Design with Rubber Grommet

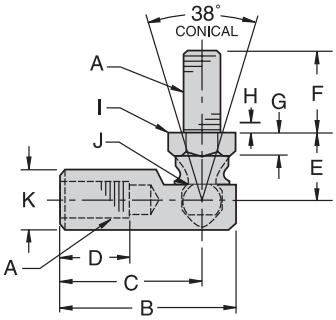

R-G CHART

Part Number Right Hand	Part Number Left Hand	A UNF	B ±.020	C ±.020	D MIN	E ±.020	F ±.020	G REF	H REF	I REF	J REF	K REF	W.F. Width	W.F. Length	Tensile & Shear Strength (Pounds)	Force to Remove Ball Stud (Pounds)
R103G	R103GLH	10-32	1.156	.875	.469	.359	.438	.094	.062	.312	.177	.375	.312	.250	295	690
R107G	R107GLH	1/4-28	1.219	.969	.500	.469	.562	.125	.094	.375	.193	.437	.375	.281	882	1,005
R108G	R108GLH	5/16-24	1.406	1.125	.562	.531	.687	.156	.094	.437	.232	.500	.437	.281	1,587	1,282
R109G	R109GLH	3/8-24	1.687	1.375	.750	.687	.875	.187	.094	.500	.287	.625	.500	.312	2,437	1,700
R110G	R110GLH	7/16-20	2.375	1.937	1.125	.875	1.125	.250	.125	.625	.412	.750	.625	.375	3,390	2,700
R111G	R111GLH	1/2-20	2.375	1.937	1.125	.875	1.125	.250	.125	.625	.412	.750	.625	.375	3,390	2,700

Chart Notes: 1. Ball Joint can be ordered without the grommet by dropping the "G" suffix. Example: R108LH
2. R103G size is supplied with a wrap around grommet, not shown.

Material:

- **Ball Stud -** Low Carbon Steel, Case Hardened for Extended Wear Life, Zinc Plated, Yellow Dichromate Treated
- **Body -** Low Carbon Steel, Zinc Plated, Yellow Dichromate Treated

Applications:

Various integral ball joint applications, including:

- Lawn and garden equipment
- Construction
- Industrial equipment

Features:

- Steel body and ball stud "staked" design offers an economical solution to medium to heavy-duty ball joint applications
- Ball stud is case hardened for extended wear life
- Rubber grommet provides a durable seal against contaminants
- Can be used in a wide range of temperatures: -30°F — 250°F (-34°C — 121°C)
- Custom sizes and assemblies can be built to your specifications, including:
  - male to male or female to female
  - right or left-handed threads
- Many metric sizes available — consult factory
- Meets SAE specification J490 (Type G/Style 2)

S/SS/SC Ball Joints

Quick Disconnect with Spring or Spring Clip

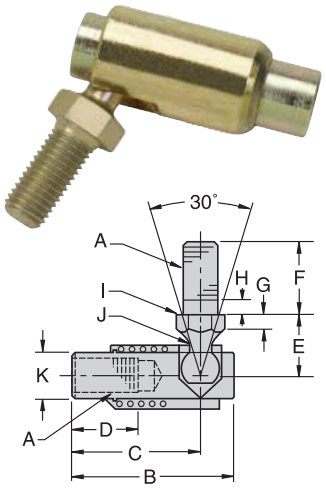

Type S

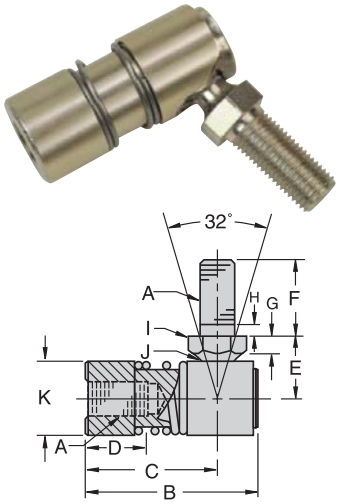

Type SS

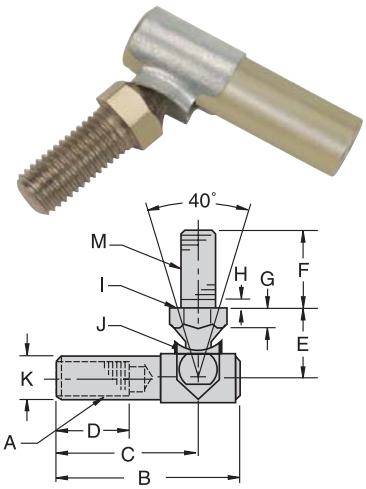

Type SC

S/SS/SC CHART

Part Number	A UNF	B ±.020	C ±.020	D MIN	E ±.020	F ±.020	G REF	H REF	I REF	J REF	K REF	M UNF	Ball Diameter REF
S103	10-32	1.094	.906	.437	.437	.437	.125	.062	.312	.171	.312	—	.253
S107S	1/4-28	1.094	.906	.531	.469	.562	.141	.062	.312	.171	.312	—	.253
SS1002	1/4-28	1.250	.969	.531	.469	.562	.125	.078	.375	.192	.562	—	.345
SS1003	5/16-24	1.453	1.125	.594	.531	.687	.125	.094	.437	.224	.625	—	.403
SS1004	3/8-24	1.750	1.375	.812	.687	.875	.156	.109	.500	.273	.750	—	.491
SC103	10-32	1.156	.875	.484	.437	.437	.187	.078	.312	.135	.312	10-32	.250
SCS103	10-32	1.156	.875	.484	.437	.562	.125	.078	.312	.135	.312	1/4-28	.250
SC107	1/4-28	1.250	.969	.531	.437	.562	.125	.078	.312	.135	.312	1/4-28	.250
SCS107	1/4-28	1.250	.969	.531	.437	.437	.125	.078	.312	.135	.312	10-32	.250

Material:

- **Ball Stud -** Low Carbon Steel, Heat Treated, Zinc Plated, Yellow Dichromate Treated
- **Sleeve -** Low Carbon Steel, Zinc Plated, Yellow Dichromate Treated
- **Body: S and SS -** Low Carbon Steel
- **Body: SC -** Low Carbon Steel, Heat Treated, Zinc Plated, Yellow Dichromate Treated
- **Spring: S and SS -** Stainless Steel
- **Spring Clip: SC** - Hardened Spring Steel

Applications:

Light to medium-duty linkage applications, including:

- Cable assemblies
- Light industrial applications
- Agricultural, lawn and garden equipment
- Racing (throttle links)

Features:

- Three different configurations, all with steel ball stud, sleeve and body to match your load and cost requirements
- Quick pull back, “no tools required” disconnect assembly provides easier access, faster maintenance
- Can be used in a wide range of temperatures: -60°F — 250°F (-51°C — 121°C)
- Right and left-handed versions available
- Custom sizes and assemblies can be built to your specifications
- S/SS Series meets SAE J490 specification (S: type S/style 1, SS: type S/style 2)

TUTHILL Controls Group ®

Cablecraft®

Notes

TUTHILL Controls Group®
Cablecraft®

Tuthill Locations

The Tuthill Corporation:

Globally Supported...Locally Serviced

Tuthill Controls Group Locations

New Haven, Indiana
Tacoma, Washington
St. Matthews, South Carolina
Hailsham, East Sussex, England
Mulheim an Der Rhur, Germany

Tuthill Controls Group Assembler Locations

Other Tuthill Locations

North America

Tuthill Corporation (HQ)
— Burr Ridge, IL
Alsip, IL
Berea, OH
Canton, MA
Brookston, IN
Fort Wayne, IN
Burlington, IA
Clearwater, FL
Coral Gables, FL
Millbury, MA
Mount Vernon, MO
Springfield, MO
San Dimas, CA
Concord, CA
South Norwalk, CT
Tickfaw, LA

Other Global Locations

Grimsby, Ontario, Canada

Quilmes, Argentina

Derbyshire, England
Lancashire, England
Leicestershire, England
Annemasse Cedex, France
Bielefeld, Germany
Wavre, Belgium
Campogalliano, Italy

Victoria, Australia

Singapore
Shanghai, China

TUTHILL Controls Group®

Cablecraft®

Linking Motion & Control...
The Tuthill Solution





TUTHILL
Controls Group ®

Tuthill Controls Group
Headquarters
2110 Summit Street
New Haven, Indiana USA 46774
Tel 260 749-5105 Fax 260 493-2387

4401 South Orchard Street
Tacoma, Washington USA 98466
Tel 253 475-1080
Fax 253 474-1623

2789 Belleville Road
St. Matthews, South Carolina USA 29135
Tel 803 655-7300
Fax 803 874-3558

Diplocks Way-South Road
Hailsham, E. Sussex BN27 3JF, England
Tel (011-44) 1323-841510
Fax (011-44) 1323-845848

Hingbergstrasse 79
45468 Mulheim an Der Rhur, Germany
Tel (011-49) 208-300-650
Fax (011-49) 208-300-6550

NATIONAL ROD ENDS Cablecraft® Bristow® Controls MFB/GmbH

www.tuthillcontrols.com

Distributed by:

Form 5000-307
© 2007 Tuthill Controls
Printed in U.S.A.