Specifications

(The wire rope composition is a manufacturer recommendation.)

Load Rating Wire Rope Tension	19,600N(=2,000kgf)	Handle Force	Handle Length 370mm / Wire Rope Tension 19,600N	128N(=13.0kgf)
Wire Rope Diameter	φ9mm(6×37), JIS	Standard Accesories		One Flat Handle, One Box Handle
Gear Ratio	Normal : 1/20,※1 Quick : 1/4			
Effective Handle Length	370mm(Maximum)	Painting		Melamine Resin Coating At Two Layers Painting Color Drum : Black(Munsell N1 Semi Gloss) Others : Munsell 7.5YR6/11
Weight	31.3kg(Winch+Handle)			

※1 : Load rating at counterclockwise : Max. wire rope tension is 3,920N (400kgf), Gear ratio is 1/4.
Quick Winding Handle is unable to use for rewinding.
※Model MC winch is designed only for horizontal pulling.
Never use this winch for vertical lifting.
It may result in serious accident and breakage of the winch.

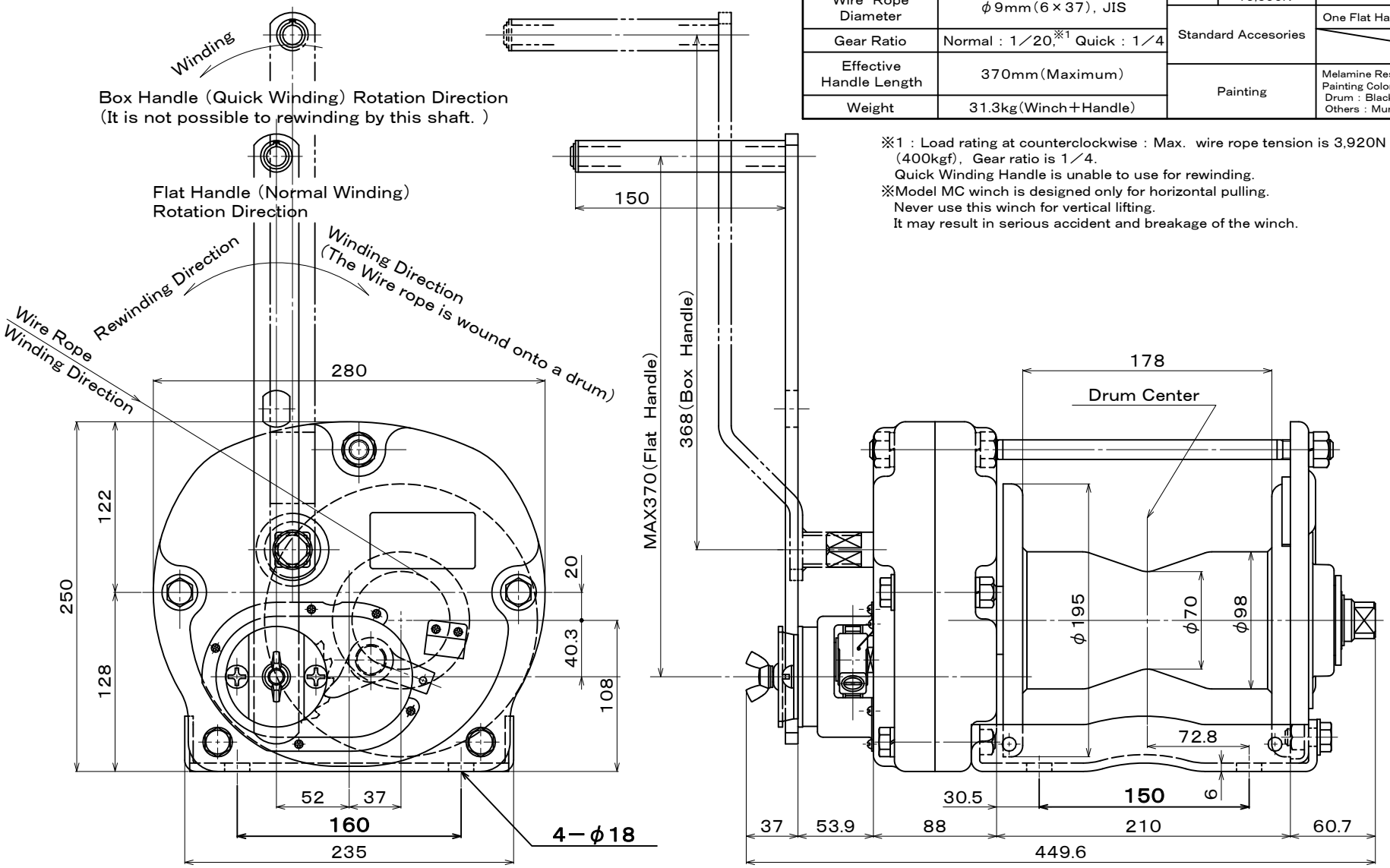

4 ×			図面番号／DRAWING No. MC20-160809-01E	改訂番号 REVISION No. 00	お客様／CUSTOMER	符号 MARK	項目 PARTICULARS	材料 MATERIAL	数量 QTY	単体 PER ONE / 合計 TOTAL / 重量(kg) WEIGHT	備考 REMARKS
3 ×											
2 ×			承認／APPROVED 設計部 '16.08.09 米澤	検図／CHECKED 設計部 '16.08.09 松嶺	作成／DRAWN 設計部 '16.08.09 武松	図面名／TITLE MAXPULL WINCH CAPSTAN TYPE MODEL MC-20	投影法／PROJECTIOJN METHOD 第三角法 THIRD ANGLE PROJECTION				
1 ×							尺度／SCALE :	台数／QTY			
改訂／REVISION											

MAXPULL MACHINERY & ENGINEERING CO.,LTD.
マックスプル工業株式会社