// Retail Price List & Product Info Guide

ALTA
WINDOW FASHIONS

ROLLER
SHADES

Effective February 4, 2019

design simplified™

TABLE OF CONTENTS

Product Overview
• Features and Benefits 2
• Collection Information (includes Opacity) 3-4
• Color Chart 5-6

Pricing Information
• Group 1 (Clutch Roller with Beaded Chain and Option Charges) 7
• Group 2 (Clutch Roller with Beaded Chain and Option Charges) 8
• Group 3 (Clutch Roller with Beaded Chain and Option Charges) 9
• Group 4 (Clutch Roller with Beaded Chain and Option Charges) 10
• Group 5 (Clutch Roller with Beaded Chain and Option Charges) 11
• Group 6 (Clutch Roller with Beaded Chain and Option Charges) 12
• Group 7 (Clutch Roller with Beaded Chain and Option Charges) 13
• Group 8 (Clutch Roller with Beaded Chain and Option Charges) 14
• Motorization Options: PowerWand™, Simplicity Rechargeable & Remolift™ Motorization Charges 16
• Hardwired Motorization and Motor Ready Options. 16
• Deluxe Valance Pricing 23
• Fabric Valance Pricing 24
• Pocket Headrail, Side and Bottom Channel Pricing 25
• Decorative Pull Tassels, Spring Assist Option, Railroading/Material Splicing/Seam Placement 26
• Exterior Shades Surcharge Pricing 28

Product Specifications
• Large Decorative Patterns & Tube Size Upgrade 15
• Options & Features, including Beaded Loop Length Chart and TouchLift Cordless 17
• PowerWand™, Simplicity Rechargeable and RemoteLift™ Motorization 18-21
• Cassettes & Fascias. 22
• Deluxe, Fabric Valance, and Dual Mount Shade 23-24
• Pocket Headrail, Side and Bottom Channels 25
• Decorative Pull Tassels, Spring Assist Option, Railroading/Material Splicing/Seam Placement 26
• Bottomrail Options. 27
• Exterior Shades 28-29
• Ordering Notes, 2-On-1, Features and Options 30
• Product Notes. 31
• Flame Retardant Fabrics 31
• Product Size Specifications – Clutch Lift. 32-43
• Product Size Specifications – TouchLift Cordless. 44-45
• Product Size Specifications – PowerWand™ Rechargeable Motorization 46-57
• Product Size Specifications – Simplicity Rechargeable Motorization 58-68
• Product Size Specifications – RemoteLift™ Motorization 69-83
• Product Size Specifications – Hardwired Motorization 84-97
• Mounting Requirements, Clutch Systems 98
• Finished Dimensions 99-103
• Hardware Color Coordination Chart 104-108
• Solar Optical Information 109
• Solar Optical Chart 110-114
• Product Components/Roller Shade Characteristics 115-122
• Roller Shade Characteristics 123

FEATURES AND BENEFITS

- Over 260 stunning materials, with robust menu of decorative, blackout fabrics, vinyl, plus over 100 screen styles.
- Featuring various screen styles ranging from simple contemporary screens to decorative screens. Including popular Mermet and Phifer fabrics, with wide array of colors, weaves and openness factors ranging from 1% to 10%. Many are flame retardant, bacteria and fungal resistant materials. Outdoor grade selections are also available.
- Elegant selection of textures, patterns, color combinations, and grass-like styles provide valued privacy, and gently filter incoming light.
- Many of our decorative patterns are now available in both light filtering and blackout materials. This is a great way to coordinate light filtering and room darkening shades throughout a home while meeting specific light control needs by room.
- Control options include beaded chain clutch control, TouchLift cordless and motorized control for complete hands-free operating ease and convenience.
- Three cassette valance options with fabric insert, neatly hide the shade when raised, providing a more finished, decorative appearance.
- Two fascia options in multiple painted colors, add a sleek and flat decorative appearance, while neatly hiding raised shades.
- Optional deluxe valance designed with clear edge groove holding matching fabric insert, and fabric valance mounted on a wood dust cover can both serve as stylish alternatives to cassette headrails and fascia.
- Bottomrail options include the standard fabric-wrapped rail, optional painted deluxe rail and a heat-sealed aluminum bar (fabric pocket style).
- Exterior shades feature corrosion-resistant components and exterior grade fabrics that can stand up to the outdoor elements.
- Panel Track and Roman Shades are available. See separate guide for information and pricing.
- Limited Lifetime Warranty ensures your customers' satisfaction.

COLLECTION INFORMATION

Material Name	Color Family	Price Group	Material Width	Fabric Content	Opacity	Flame Retardant	Greenguard Certified	Bacterial & Fungal Resistant	Railroad Option	Splice/ Seam	Deluxe Valance	Fabric Valance	Bottomrail Styles	Panel Track	Roller Roman Shades	Exterior Shade
1% E Screen	R80	4	122"	36% Fiberglass, 64% Vinyl	D	YES	YES	YES	YES	YES	YES	YES	All	YES	YES	YES
1% Sheerweave 2500	R01	6	126"	37% Fiberglass, 63% Vinyl	D	YES	YES	YES	YES	YES	YES	YES	All	YES	YES	YES
1% Sheerweave 2701	RS21	5	126"	36% Fiberglass, 64% Vinyl	D	YES	YES	YES	YES	YES	YES	YES	All	YES	YES	YES
1% Sheerweave 5000	R07	4	98"	49% Polyester, 51% Vinyl on Polyester	D	YES	YES	YES	NO	NO	YES	YES	All	YES	YES	YES
1% Toka	RS11	3	118"	30% Polyester, 70% PVC	D	YES	YES	YES	YES	YES	YES	YES	All	YES	YES	NO
3% E Screen	R81	3	122"	36% Fiberglass, 64% Vinyl	C	YES	YES	YES	YES	YES	YES	YES	All	YES	YES	YES
3% M Screen	R58	4	122"	36% Fiberglass, 64% Vinyl	C	YES	YES	YES	YES	YES	YES	YES	All	YES	YES	YES
3% Sheerweave 2410	R06	4	126"	35% Fiberglass, 65% Vinyl on Fiberglass	C	YES	YES	YES	YES	YES	YES	YES	All	YES	YES	YES
3% Sheerweave 4400	RS2	4	126"	25% Polyester, 75% Vinyl on Polyester	C	YES	YES	YES	YES	YES	YES	YES	All	YES	YES	YES
3% Sheerweave 5000	R07	4	98"	Varies	C	YES	YES	YES	NO	NO	YES	YES	All	YES	NO	YES
3% T Screen	RS16	4	98"	36% Fiberglass, 64% Vinyl	C	YES	YES	YES	YES	NO	YES	YES	All	YES	YES	YES
4% S Screen	RS15	5	122"	33.6% Fiberglass, 59.6% Vinyl, 6.8% Polyester	B	YES	YES	YES	NO	NO	YES	YES	All	YES	NO	YES
4% Silver Screen	RS6	8	94"	64% PVC, 36% Fiberglass	C	YES	YES	YES	YES	YES	YES	YES	All	YES	YES	NO
5% E Screen	R51	3	122"	36% Fiberglass, 64% Vinyl	B	YES	YES	YES	YES	YES	YES	YES	All	YES	YES	YES
5% M Screen Deco	R61	4	98"	36% Fiberglass, 64% Vinyl	B	YES	YES	YES	YES	YES	YES	YES	All	YES	YES	YES
5% Sheerweave 2390	RS1	3	126"	35% Fiberglass, 65% Vinyl on Fiberglass	B	YES	YES	YES	YES	YES	YES	YES	All	YES	YES	YES
5% Sheerweave 4000	R09	3	126"	25% Polyester, 75% Vinyl on Polyester	B	YES	YES	YES	YES	YES	YES	YES	All	YES	YES	YES
5% Sheerweave 5000	R10	4	98"	Varies	B	YES	YES	YES	NO	NO	YES	YES	All*	YES	NO	YES
7% Global Screen	RS14	2	118"	30% Polyester, 70%PVC	B	YES	YES	YES	YES	YES	YES	YES	All	YES	YES	NO
7% Sheerweave 5000	R10/R34	4	98"	Varies	B	YES	YES	YES	NO	NO	YES	YES	All	YES	NO	YES
10% E Screen	R19	3	122"	36% Fiberglass, 64% Vinyl	A	YES	YES	YES	YES	YES	YES	YES	All	YES	YES	YES
10% Sheerweave 5000	R26	4	98"	28% Polyester, 72% Vinyl on Polyester	A	YES	YES	YES	NO	NO	YES	YES	All	YES	NO	YES

A. Glare Reducing
Softly filters light and reduces glare. Images, shapes and people can be seen clearly. Provides the least amount of light and shape screening.

B. Filtering
Filters strong light. Images, shapes and people can be seen with some clarity. Provides a modest degree of light and shape screening.

C. Shading
Significantly reduces light. Images, shapes and people cannot be seen clearly. Provides a moderate to strong degree of light and shape screening.

D. Blocking
Dramatically reduces light. Images, shapes and people are not distinguishable. Provides privacy against most all direct light and shape screening (except minimal light that may seep through closed or overlapping opaque/blackout vanes).

E. Blackout
Blocks out virtually all light (except light that may enter on the sides of the shade) for maximum privacy and darkness.

Openess cross over reference:

- E Screen (1%, 3%, 5%, 7% & 10%), all colors cross over.
- Sheerweave (1% - 2500, 3% - 2410 & 5% - 2390), most colors cross over.

COLLECTION INFORMATION

Material Name	Color Family	Price Group	Material Width	Fabric Content	Opacity	Flame Retardant	Greenguard Certified	Bacterial & Fungal Resistant	Railroad Option	Splice/ Seam	Deluxe Valance	Fabric Valance	Bottomrail Styles	Panel Track	Roller Roman Shades	Exterior Shade
Alexandria	RD4	7	78"	100% Polyester	B	NO	NO	N/A	NO	NO	YES	YES	All	YES	YES	NO
Astaire	RF42	5	94"	100% Polyester	B	NO	NO	NO	NO	NO	NO	NO	All	NO	NO	NO
Avila R Blackout	RB7	4	118"	37.5% Polyester, 62.5% Acrylic	E	YES	YES	YES	YES	YES	YES	YES	Heat Sealed Hem Only	YES	NO	NO
Baroque	RD5	6	78"	65% Cotton, 35% Polyester	C	NO	NO	NO	NO	NO	YES	YES	All	YES	YES	NO
Blackout - Solid	R40	1	72"	100% PVC Coated Fiberglass	E	YES	YES	YES	YES	YES	YES	NO	All	YES	NO	NO
Brilliance	RD8	5	118"	100% Polyester	C	NO	NO	Yes	NO	NO	YES	YES	All	YES	YES	NO
Brilliance Blackout	RB6	6	118"	100% Polyester	E	NO	NO	YES	NO	NO	YES	YES	All	YES	NO	NO
Cararra	RD6	2	110"	100% Polyester with Acrylic Coating	C	NO	NO	N/A	NO	NO	YES	YES	All	YES	YES	NO
Cararra Blackout	RB4	2	110"	100% Polyester with Acrylic Coating	E	NO	NO	N/A	NO	NO	YES	YES	All	NO	NO	NO
Claudio	RD7	5	110"	90% Polyester, 10% Cationic Polyester	C	NO	NO	NO	NO	NO	YES	YES	All	YES	YES	NO
Claudio Blackout	RB5	5	110"	90% Polyester, 10% Cationic Polyester	E	NO	NO	NO	NO	NO	YES	YES	All	YES	NO	NO
Cusco	RF6	7	110"	100% Polyester	E	NO	NO	N/A	YES	YES	YES	YES	All	YES	YES	NO
Darien	RD1	5	90"	100% Polyester	B	NO	NO	N/A	NO	NO	YES	YES	All	YES	YES	NO
Drizzle	RD2	5	78"	89% Polyester, 11% Linen	B	NO	NO	N/A	YES	YES	YES	YES	All	YES	YES	NO
Fiona	RD3	6	78"	100% Polyester	C	NO	NO	YES	NO	NO	YES	YES	All	YES	YES	NO
Flocke Blackout	R92	8	94"	42% Fiberglass, 51% Acrylic, 7% Cotton Flocked Backing	E	YES	NO	NO	YES	YES	YES	YES	All	YES	NO	NO
Hayworth	RF32	2	98"	100% Polyester	B	NO	NO	NO	YES	YES	YES	YES	All	YES	YES	NO
Illusion	RF34	4	72"	100%Polyester	B	NO	NO	YES	YES	NO	YES	YES	All	YES	YES	NO
Jasper	RF5	8	110"	100% Polyester	C	NO	NO	N/A	YES	YES	YES	YES	All	YES	YES	NO
Linview	R56	3	94"	100% Polyester	B	NO	NO	N/A	YES	YES	YES	YES	All	YES	YES	NO
Linview Blackout	RB3	4	94"	100% Polyester	E	NO	NO	N/A	NO	NO	YES	YES	Heat Sealed Hem Only	YES	NO	NO
Montero	RF4	3	94"	100% Polyester with Acrylic Coating	D	NO	NO	N/A	NO	NO	YES	YES	All	YES	YES	NO
Moravia	RF8	7	96"	100% Polyester	B	NO	NO	N/A	NO	NO	YES	YES	All	YES	YES	NO
Santa Cruz	RF3	3	94"	100% Polyester	D	NO	NO	N/A	NO	NO	YES	YES	All	YES	YES	NO
Santa Cruz Blackout	RB1	3	94"	100% Polyester	E	NO	NO	N/A	NO	NO	YES	YES	All	YES	NO	NO
Scala Blackout	R100	2	110"	100% Polyester	E	NO	NO	N/A	YES	YES	YES	NO	Heat Sealed Hem Only	YES	NO	NO
Sorrento	RF35	2	108"	85.9% Polyester, 8.3% Cotton, 5.8% Flax	B	NO	NO	YES	NO	NO	YES	YES	All	YES	YES	NO
Sunscreen 7000	R11	7	118"	100% Polyester with Acrylic Foamed Backing	E	YES	YES	YES	YES	YES	YES	YES	All	YES	NO	NO
Uptown	R79	8	78"	66% Cotton, 34% Polyester	C	NO	NO	NO	YES	NO	YES	YES	Fabric-Wrapped, Deluxe	YES	YES	NO
Uptown Room Darkening	R79	8	78"	66% Cotton, 34% Polyester	E	NO	NO	NO	YES	NO	YES	YES	Fabric-Wrapped, Deluxe	YES	NO	NO
World Textures 1	R48	5	78"	80% Cotton, 20% Flax	C	NO	NO	NO	YES	YES	YES	YES	All	YES	NO	NO
World Textures 1 Blackout	R50	6	78"	100% Cotton	E	NO	NO	NO	YES	YES	YES	YES	All	YES	NO	NO
World Textures 2	R49	7	80"	40% Viscose, 23% PES, 20% Cotton, 17% Flax	C	NO	NO	NO	YES	YES	YES	YES	All	YES	NO	NO
World Textures 2 Blackout	R50	7	80"	40% Viscose, 23% PES, 20% Cotton, 17% Flax	E	NO	NO	NO	YES	YES	YES	YES	All	YES	NO	NO

A. Glare Reducing
Softly filters light and reduces glare. Images, shapes and people can be seen clearly. Provides the least amount of light and shape screening.

B. Filtering
Filters strong light. Images, shapes and people can be seen with some clarity. Provides a modest degree of light and shape screening.

C. Shading
Significantly reduces light. Images, shapes and people cannot be seen clearly. Provides a moderate to strong degree of light and shape screening.

D. Blocking
Dramatically reduces light. Images, shapes and people are not distinguishable. Provides privacy against most all direct light and shape screening (except minimal light that may seep through closed or overlapping opaque/blackout vanes).

E. Blackout
Blocks out virtually all light (except light that may enter on the sides of the shade) for maximum privacy and darkness.

Complementary Collections: *(Most colors cross over)*

- Brilliance & Brilliance Blackout
- Cararra & Cararra Blackout
- Claudio & Claudio Blackout
- Linview & Linview Blackout
- Santa Cruz & Santa Cruz Blackout
- Uptown & Uptown Blackout
- World Texture 2 & World Texture 2 Blackout

COLOR CHART

Material Name	Color Name	Color #
1% E Screen	Charcoal/Charcoal	R8009
1% E Screen	Charcoal/Cocoa	R8007
1% E Screen	Charcoal/Grey	R8008
1% E Screen	White	R8004
1% E Screen	White/Linen	R8005
1% E Screen	White/Pearl	R8003
1% Sheerweave 2500	Charcoal/Alpaca	R0109
1% Sheerweave 2500	Charcoal/Chestnut	R0104
1% Sheerweave 2500	Charcoal/Gray	R0103
1% Sheerweave 2500	Oyster	R0105
1% Sheerweave 2500	Oyster/Beige	R0106
1% Sheerweave 2500	Oyster/Pearl Gray	R0107
1% Sheerweave 2701	Oyster	RS2101
1% Sheerweave 2701	Oyster/Beige	RS2102
1% Sheerweave 2701	Oyster/Charcoal	RS2106
1% Sheerweave 2701	Oyster/Chestnut	RS2105
1% Sheerweave 2701	Oyster/Pearl Gray	RS2103
1% Sheerweave 2701	Oyster/Pewter	RS2104
1% Sheerweave 5000	Jute/Coffee	R0708
1% Sheerweave 5000	Jute/Flax	R0709
1% Toka	Bone	RS11002
1% Toka	Platinum	RS11003
1% Toka	White	RS11001
3% E Screen	Charcoal/Charcoal	R8102
3% E Screen	Charcoal/Cocoa	R8107
3% E Screen	Charcoal/Grey	R8108
3% E Screen	White/Linen	R8104
3% E Screen	White/Pearl	R8105
3% E Screen	White/White	R8106
3% M Screen	Charcoal/Apricot	R5803
3% M Screen	Charcoal/Charcoal	R5805
3% M Screen	Charcoal/Sable	R5808
3% M Screen	White Linen	R5807
3% M Screen	White/White	R5801

Material Name	Color Name	Color #
3% Sheerweave 2410	Charcoal	R0603
3% Sheerweave 2410	Charcoal/Alpaca	R0609
3% Sheerweave 2410	Charcoal/Chestnut	R0604
3% Sheerweave 2410	Oyster	R0605
3% Sheerweave 2410	Oyster/Beige	R0606
3% Sheerweave 2410	Oyster/Pearl Gray	R0607
3% Sheerweave 4400	Alabaster	RS2200
3% Sheerweave 4400	Chalk	RS2202
3% Sheerweave 4400	Greystone	RS2201
3% Sheerweave 4400	Pewter	RS2203
3% Sheerweave 5000	Bark/Sienna	R0710
3% Sheerweave 5000	Chenille/Honey	R0707
3% Sheerweave 5000	Linen/Cinnamon	R0702
3% Sheerweave 5000	Linen/Cream	R0704
3% Sheerweave 5000	Linen/Fig	R0705
3% T Screen	Charcoal/Charcoal	RS16005
3% T Screen	Charcoal/Grey	RS16006
3% T Screen	Sable/Charcoal	RS16003
3% T Screen	White/Pearl	RS16004
3% T Screen	White/Sable-Straw	RS16002
3% T Screen	White/White	RS16001
4% S Screen	Ginger	RS15006
4% S Screen	Granite	RS15004
4% S Screen	Papyrus	RS15003
4% S Screen	Porcelain	RS15001
4% S Screen	Sesame	RS15007
4% Silver Screen	Beige	RS6501
4% Silver Screen	Black	RS6504
4% Silver Screen	Bronze	RS6503
4% Silver Screen	Light Grey	RS6500
4% Silver Screen	White	RS6502
5% E Screen	Charcoal/Charcoal	R5105
5% E Screen	Charcoal/Cocoa	R5104
5% E Screen	Charcoal/Grey	R5110
5% E Screen	Pure White	R5101
5% E Screen	White/Linen	R5108
5% E Screen	White/Pearl	R5109
5% M Screen Deco	Flagstone	R6107
5% M Screen Deco	Harvest Wheat	R6104
5% M Screen Deco	Hazelnut	R6105
5% M Screen Deco	Parchment	R6106
5% M Screen Deco	River Rock	R6102
5% M Screen Deco	Tumbleweed	R6103

Material Name	Color Name	Color #
5% Sheerweave 2390	Charcoal	RS1105
5% Sheerweave 2390	Charcoal/Alpaca	RS1106
5% Sheerweave 2390	Charcoal/Chestnut	RS1104
5% Sheerweave 2390	Charcoal/Gray	RS1102
5% Sheerweave 2390	Oyster	RS1100
5% Sheerweave 2390	Oyster/Beige	RS1101
5% Sheerweave 2390	Oyster/Pearl Gray	RS1103
5% Sheerweave 4000	Alabaster	R0901
5% Sheerweave 4000	Chalk	R0902
5% Sheerweave 4000	Granite	R0906
5% Sheerweave 4000	Greystone	R0904
5% Sheerweave 5000	Aura Sable	R1021
5% Sheerweave 5000	Bark/Ash	R1009
5% Sheerweave 5000	Bark/Pewter	R1010
5% Sheerweave 5000	Bark/Tiger Oak	R1001
5% Sheerweave 5000	Chenille/Driftwood	R1007
5% Sheerweave 5000	Contour Essence	R1017
5% Sheerweave 5000	Contour Natural	R1016
5% Sheerweave 5000	Contour Smoke	R1018
5% Sheerweave 5000	Linen/Pearl	R1014
5% Sheerweave 5000	Linen/Taupe	R1015
5% Sheerweave 5000	Metro /Platinum	R1019
5% Sheerweave 5000	Pavestone	R1020
5% Sheerweave 5000	Tweed/Buckeye	R1003
5% Sheerweave 5000	Tweed/Oatmeal	R1006
5% Sheerweave 5000	Twine/Flagstone	R1012
5% Sheerweave 5000	Twine/Metal	R1013
5% Sheerweave 5000	Twine/Oatmeal	R1011
7% Global Screen	Barley	RS14002
7% Global Screen	Canvas	RS14001
7% Global Screen	Platinum	RS14003
7% Sheerweave 5000	Bamboo/Wheat	R1008
7% Sheerweave 5000	Bamboo White/Wheat	R3409
7% Sheerweave 5000	Linen/Clay	R3408
10% E Screen	Charcoal/Charcoal	R1902
10% E Screen	Charcoal/Cocoa	R1907
10% E Screen	White Pearl	R1908
10% E Screen	White/Linen	R1905
10% E Screen	White/White	R1906
10% Sheerweave 5000	Bamboo/Birch	R2603

COLOR CHART

Material Name	Color Name	Color #
Alexandria	Charcoal	RD403
Alexandria	Duck Egg	RD402
Alexandria	Oatmeal	RD401
Astaire	Grey	RF42004
Astaire	Ivory	RF42002
Astaire	White	RF42001
Avila R Blackout	Canvas	RB703
Avila R Blackout	Chalk	RB702
Avila R Blackout	Charcoal	RB708
Avila R Blackout	Khaki	RB705
Avila R Blackout	Linen	RB704
Avila R Blackout	Marine	RB706
Avila R Blackout	Onyx	RB709
Avila R Blackout	Pewter	RB707
Avila R Blackout	White	RB701
Baroque	Champagne	RD501
Baroque	Cyan	RD502
Baroque	Ebony	RD504
Baroque	Ruby	RD503
Blackout - Solid	Alabaster	R4011
Blackout - Solid	Bone	R4005
Blackout - Solid	Buff	R4008
Blackout - Solid	Oyster	R4006
Blackout - Solid	White	R4001
Brilliance	Birch	RD802
Brilliance	Dove Gray	RD804
Brilliance	Pearl	RD801
Brilliance	Putty	RD803
Brilliance	Pyrite	RD805
Brilliance	Steel	RD806
Brilliance Blackout	Birch	RB602
Brilliance Blackout	Dove Gray	RB604
Brilliance Blackout	Pearl	RB601
Brilliance Blackout	Putty	RB603
Brilliance Blackout	Pyrite	RB605
Brilliance Blackout	Steel	RB606
Carrara	Coal	RD606
Carrara	Saddle	RD604
Carrara	Silver	RD603
Carrara	Storm	RD605
Carrara	Tusk	RD602
Carrara	White	RD601
Carrara Blackout	Coal	RB406
Carrara Blackout	Storm	RB405
Carrara Blackout	Saddle	RB404
Carrara Blackout	Silver	RB403
Carrara Blackout	Tusk	RB402
Carrara Blackout	White	RB401
Claudio	Ash	RD706
Claudio	Cloud	RD701
Claudio	Cream	RD702
Claudio	Gray Matters	RD708
Claudio	Mink	RD704
Claudio	Mist	RD703
Claudio	Reef	RD705
Claudio	Sailcloth	RD707

Material Name	Color Name	Color #
Claudio Blackout	Ash	RB506
Claudio Blackout	Cloud	RB501
Claudio Blackout	Cream	RB502
Claudio Blackout	Mink	RB504
Claudio Blackout	Mist	RB503
Claudio Blackout	Reef	RB505
Cusco	Chateau	RF6400
Cusco	Coconut Husk	RF6401
Cusco	Shadow Ridge	RF6402
Darien	Bark	RD106
Darien	Beige	RD101
Darien	Charcoal	RD107
Darien	Driftwood	RD103
Darien	Mocha	RD104
Darien	Sand	RD102
Darien	Sea Mist	RD105
Drizzle	Flax	RD201
Drizzle	Graphite	RD205
Drizzle	Hessian	RD202
Drizzle	Iron	RD204
Drizzle	Tweed	RD203
Fiona	Grey	RD303
Fiona	Sand	RD301
Fiona	Smokey Blue	RD302
Flocke Blackout	Chartreux	R9205
Flocke Blackout	Crystal	R9204
Flocke Blackout	Sea Cliff	R9202
Flocke Blackout	Spun Silk	R9203
Hayworth	Linen	RF32001
Hayworth	White	RF32000
Illusion	Dove	RF34003
Illusion	Flannel	RF34004
Illusion	Ivory	RF34002
Illusion	Snow	RF34001
Jasper	Country Linen	RF5303
Jasper	Heather	RF5302
Jasper	Storm Cloud	RF5300
Jasper	Tweed	RF5301
Linview	Ash	R5613
Linview	Cabana Wood	R5603
Linview	Fog	R5611
Linview	Macadamia	R5606
Linview	Midnight Black	R5615
Linview	Morning Light	R5602
Linview	Navy	R5610
Linview	New York Grey	R5614
Linview	Pale Lapis	R5609
Linview	Porpoise	R5612
Linview	Rural Green	R5607
Linview	Skyward	R5608
Linview	Slate	R5605
Linview	Summer White	R5601
Linview	Weathered Walnut	R5604

Material Name	Color Name	Color #
Linview Blackout	Alabaster	RB302
Linview Blackout	Café Crème	RB303
Linview Blackout	Collonade Gray	RB306
Linview Blackout	Gauntlet Gray	RB309
Linview Blackout	Pale Gray	RB307
Linview Blackout	Pure White	RB301
Linview Blackout	Stone	RB304
Linview Blackout	Tranquility	RB305
Linview Blackout	Whale	RB308
Montero	Dark Walnut	RF4200
Montero	Java Coast	RF4201
Montero	Wicker Basket	RF4202
Moravia	Coastal	RF8602
Moravia	Countryside	RF8600
Moravia	Seabreeze	RF8601
Santa Cruz	Bunglehouse Blue	RF3101
Santa Cruz	Manchester	RF3100
Santa Cruz	Night Sky	RF3106
Santa Cruz	Rainforest	RF3107
Santa Cruz Blackout	Bunglehouse Blue	RB102
Santa Cruz Blackout	Manchester	RB101
Santa Cruz Blackout	Night Sky	RB104
Santa Cruz Blackout	Rainforest	RB103
Scala Blackout	Gray	R10005
Scala Blackout	Off White	R10002
Scala Blackout	Silver	R10004
Scala Blackout	White	R10001
Sorrento	Bisque	RF35002
Sorrento	Linen	RF35001
Sorrento	Stucco	RF35003
Sunscreen 7000	Birch	R1101
Sunscreen 7000	Graphite	R1107
Sunscreen 7000	Mushroom	R1102
Sunscreen 7000	Onyx	R1103
Sunscreen 7000	Sand	R1104
Sunscreen 7000	White	R1106
Uptown	Sterling	R7902
Uptown	Sterling Room Darkening	R7901
World Textures 1	Cyprus Coast	R4802
World Textures 1	Medina Mirage	R4803
World Textures 1	Medina Vision	R4806
World Textures 1 Blackout	Cypress Formal	R5001
World Textures 2	Oslo Blend	R4902
World Textures 2 Blackout	Oslo Terrain	R5004

Effective 2/4/19

Group 1 – Clutch Roller with Beaded Chain

• Blackout - Solid (72")

WIDTH TO:	24"	30"	36"	48"	60"	72"	84"	96"	108"	120"	132"	144"
HEIGHT TO:												
36"	$89	91	93	109	123	142	169	198	210	228	239	256
48"	93	95	97	112	130	151	181	211	228	246	260	277
61"	104	107	109	118	138	161	193	226	245	265	283	301
72"	112	115	117	134	158	171	207	241	260	283	302	322
84"	116	118	121	143	168	183	220	256	278	301	323	344
96"	121	125	127	149	176	193	231	270	301	319	343	363
108"	127	130	133	158	186	204	243	286	311	339	362	390
120"	132	135	138	165	194	215	255	302	329	357	382	413
132"	137	142	144	173	205	225	268	315	344	375	402	434
144"	144	148	151	180	213	237	279	330	360	394	423	454

2-on-1 Shades Option: A Two-on-One shade is two shades under one continuous cassette valance. To price a 2-on-1, determine the price of each individual shade then add in the price of two individual cassette valances using the width of each shade. The total sum for the 2-on-1 shade is the sum of both shades and both cassettes. Clutch position only available on the outside of each shade (left shade - left side, right shade - right side).

NOTE: There is a 1/2" gap between the two shades. Please refer to the Product Size Specifications for individual shade sizes. Available with the Beaded Chain Clutch System & RemoteLift Motorization only.

Metal bead chain & Heat sealed hem are strongly recommended on shade size equal, wider than 108" or longer than 90", to improve the operation, and appearance of the shade, minimizing waviness, twisting, cupping & curling, especially on shades with railroaded material.

Spring assist clutch system aids in raising heavy shades by reducing the pull force by up to 40%. Highly recommend on large shades greater than 44.4 SQ.FT. with shade width greater than 60". Please note Spring Assist is not available with cassettes or 3" fascia.

TouchLift Cordless Option Surcharge – $81

Small Cassette Valance Option Surcharge (with fabric insert) – White, Vanilla, Bronze, and Black

WIDTH TO:	24"	30"	36"	48"	60"	72"	84"	96"	108"	120"	132"	144"
	$54	60	67	78	89	101	112	125	140	155	166	175

Medium Cassette Valance Option Surcharge (with fabric insert) – White, Vanilla, Silver, Bronze, and Black

WIDTH TO:	24"	30"	36"	48"	60"	72"	84"	96"	108"	120"	132"	144"
	$59	67	76	91	103	114	121	134	146	159	172	185

Large Cassette Valance Option Surcharge (with fabric insert) – White, Vanilla, Silver, Bronze, and Black

WIDTH TO:	24"	30"	36"	48"	60"	72"	84"	96"	108"	120"	132"	144"
	$63	69	80	97	112	121	132	144	155	166	179	187

NOTE: Maximum overall width for 2-on-1 is 144" on all 3 cassette sizes.

Fascia Option Surcharge – White, Vanilla, Silver, Bronze, Black

WIDTH TO:	24"	30"	36"	48"	60"	72"	84"	96"	108"	120"	132"	144"
3" Flat	$53	56	61	70	78	89	99	111	122	135	148	163
4" Flat	57	61	67	74	87	101	114	126	139	151	164	179

Deluxe Valance Surcharge (standard height 3-5/8") Direction of fabric insert follows shade installed below. If valance is wider than material width, and shade below is not railroaded; valance will be made with a center seamed fabric insert. See deluxe valance section for more details.

WIDTH TO:	24"	30"	36"	48"	60"	72"	84"	96"	108"	120"	132"	144"
Fabric Insert	$29	32	35	41	48	51	53	59	64	65	71	76

Fabric Valance (standard height 6") For valances wider than material width, material will be railroaded. Includes all Roller Shade materials. (Non-railroaded with center seam available upon request.) See fabric valance section for more details.

WIDTH TO:	24"	30"	36"	48"	60"	72"	84"	96"	108"	120"	132"	144"
IB 4" & 6"	$83	89	98	109	121	141	161	185	205	225	245	265
IB 8" & 12"	91	101	109	143	162	177	201	226	248	274	297	323
OB 4" & 6"	$113	124	134	151	170	185	210	233	257	286	312	340
OB 8" & 12"	126	137	151	172	195	215	243	272	301	337	369	403

Tube Size Upgrade Surcharge – applies only if upgraded to a larger tube. This option only available for shades without top treatment.

TUBE SIZE:	1-1/2"	2"	2-1/2"	3-1/4"
	$33	62	97	108

See page 16 for motorization surcharges

Group 2 – Clutch Roller with Beaded Chain

- 7% Global Screen (118")
- Cararra (110")
- Cararra Blackout (110")*
- Hayworth (98")
- Scala Blackout (110")
- Sorrento (108")

WIDTH TO:	24"	30"	36"	48"	60"	72"	84"	96"	108"	120"	132"	144"
HEIGHT TO:												
36"	$104	108	109	136	154	177	208	245	265	285	309	328
48"	114	117	119	150	169	197	233	274	300	324	350	370
61"	126	130	133	159	186	218	256	306	330	359	389	418
72"	141	144	147	185	219	239	282	335	367	399	428	464
84"	152	156	159	201	236	260	308	362	400	437	471	511
96"	162	166	169	217	254	283	331	394	431	472	509	553
108"	171	176	180	231	274	302	353	419	462	512	553	595
120"	182	186	190	246	293	321	380	450	499	548	594	642
132"	191	195	201	260	310	344	402	478	532	580	634	685
144"	202	207	211	275	326	365	425	507	564	618	676	723

2-on-1 Shades Option: A Two-on-One shade is two shades under one continuous cassette valance. To price a 2-on-1, determine the price of each individual shade then add in the price of two individual cassette valances using the width of each shade. The total sum for the 2-on-1 shade is the sum of both shades and both cassettes. Clutch position only available on the outside of each shade (left shade - left side, right shade - right side).

NOTE: There is a 1/2" gap between the two shades. Please refer to the Product Size Specifications for individual shade sizes. Available with the Beaded Chain Clutch System & RemoteLift Motorization only.

* Stainless steel bead chain is **REQUIRED** under skyline clutch when shade size is 108" x 90" and greater on patterns with *.

Heat sealed hem is strongly recommended on shade size equal, wider than 108" or longer than 90", to improve the appearance of the shade, minimizing waviness, twisting, cupping & curling, especially on shades with railroaded material.

Spring assist clutch system aids in raising heavy shades by reducing the pull force by up to 40%. Highly recommend on large shades greater than 44.4 SQ.FT. with shade width greater than 60". Please note Spring Assist is not available with cassettes or 3" fascia.

TouchLift Cordless Option Surcharge – $81

Small Cassette Valance Option Surcharge (with fabric insert) – White, Vanilla, Bronze, and Black

WIDTH TO:	24"	30"	36"	48"	60"	72"	84"	96"	108"	120"	132"	144"
	$54	60	67	78	89	101	112	125	140	155	166	175

Medium Cassette Valance Option Surcharge (with fabric insert) – White, Vanilla, Silver, Bronze, and Black

WIDTH TO:	24"	30"	36"	48"	60"	72"	84"	96"	108"	120"	132"	144"
	$59	67	76	91	103	114	121	134	146	159	172	185

Large Cassette Valance Option Surcharge (with fabric insert) – White, Vanilla, Silver, Bronze, and Black

WIDTH TO:	24"	30"	36"	48"	60"	72"	84"	96"	108"	120"	132"	144"
	$63	69	80	97	112	121	132	144	155	166	179	187

NOTE: Maximum overall width for 2-on-1 is 144" on all 3 cassette sizes.

Fascia Option Surcharge – White, Vanilla, Silver, Bronze, Black

WIDTH TO:	24"	30"	36"	48"	60"	72"	84"	96"	108"	120"	132"	144"
3" Flat	$53	56	61	70	78	89	99	111	122	135	148	163
4" Flat	57	61	67	74	87	101	114	126	139	151	164	179

Deluxe Valance Surcharge (standard height 3-5/8") Direction of fabric insert follows shade installed below. If valance is wider than material width, and shade below is not railroaded; valance will be made with a center seamed fabric insert. See deluxe valance section for more details.

WIDTH TO:	24"	30"	36"	48"	60"	72"	84"	96"	108"	120"	132"	144"
Fabric Insert	$29	32	35	41	48	51	53	59	64	65	71	76

Fabric Valance (standard height 6") For valances wider than material width, material will be railroaded. Includes all Roller Shade materials. (Non-railroaded with center seam available upon request.) See fabric valance section for more details.

WIDTH TO:	24"	30"	36"	48"	60"	72"	84"	96"	108"	120"	132"	144"
IB 4" & 6"	$83	89	98	109	121	141	161	185	205	225	245	265
IB 8" & 12"	91	101	109	143	162	177	201	226	248	274	297	323
OB 4" & 6"	$113	124	134	151	170	185	210	233	257	286	312	340
OB 8" & 12"	126	137	151	172	195	215	243	272	301	337	369	403

Tube Size Upgrade Surcharge – applies only if upgraded to a larger tube. This option only available for shades without top treatment.

TUBE SIZE:	1-1/2"	2"	2-1/2"	3-1/4"
	$33	62	97	108

See page 16 for motorization surcharges

Group 3 – Clutch Roller with Beaded Chain

- 1% Toka (118")*
- 3% E Screen (122")
- 5% E Screen (122")
- 5% Sheerweave 2390 (126")
- 5% Sheerweave 4000 (126")*
- 10% E Screen (122")
- Linview (94")
- Montero (94")
- Santa Cruz (94")
- Santa Cruz Blackout (94")*

WIDTH TO:	24"	30"	36"	48"	60"	72"	84"	96"	108"	120"	132"	144"
HEIGHT TO:												
36"	$112	115	117	151	165	197	229	273	295	322	345	369
48"	124	126	130	158	184	223	261	309	338	365	396	426
61"	137	141	143	172	200	248	290	346	378	416	445	481
72"	161	165	168	210	250	274	322	382	419	457	498	539
84"	169	174	178	230	274	302	352	417	462	505	547	594
96"	185	189	193	246	294	328	380	455	502	550	600	645
108"	195	201	205	264	318	353	417	488	541	595	652	705
120"	209	214	218	282	341	380	441	531	583	643	705	754
132"	220	226	231	300	362	408	478	567	624	689	754	812
144"	233	238	243	319	386	435	507	603	667	734	799	861

2-on-1 Shades Option: A Two-on-One shade is two shades under one continuous cassette valance. To price a 2-on-1, determine the price of each individual shade then add in the price of two individual cassette valances using the width of each shade. The total sum for the 2-on-1 shade is the sum of both shades and both cassettes. Clutch position only available on the outside of each shade (left shade - left side, right shade - right side).

NOTE: There is a 1/2" gap between the two shades. Please refer to the Product Size Specifications for individual shade sizes. Available with the Beaded Chain Clutch System & RemoteLift Motorization only.

* Stainless steel bead chain is **REQUIRED** under skyline clutch when shade size is 108" x 90" and greater on patterns with *.

Heat sealed hem is strongly recommended on shade size equal, wider than 108" or longer than 90", to improve the appearance of the shade, minimizing waviness, twisting, cupping & curling, especially on shades with railroaded material.

Spring assist clutch system aids in raising heavy shades by reducing the pull force by up to 40%. Highly recommend on large shades greater than 44.4 SQ.FT. with shade width greater than 60". Please note Spring Assist is not available with cassettes or 3" fascia.

TouchLift Cordless Option Surcharge – $81

Small Cassette Valance Option Surcharge (with fabric insert) – White, Vanilla, Bronze, and Black

WIDTH TO:	24"	30"	36"	48"	60"	72"	84"	96"	108"	120"	132"	144"
	$54	60	67	78	89	101	112	125	140	155	166	175

Medium Cassette Valance Option Surcharge (with fabric insert) – White, Vanilla, Silver, Bronze, and Black

WIDTH TO:	24"	30"	36"	48"	60"	72"	84"	96"	108"	120"	132"	144"
	$59	67	76	91	103	114	121	134	146	159	172	185

Large Cassette Valance Option Surcharge (with fabric insert) – White, Vanilla, Silver, Bronze, and Black

WIDTH TO:	24"	30"	36"	48"	60"	72"	84"	96"	108"	120"	132"	144"
	$63	69	80	97	112	121	132	144	155	166	179	187

NOTE: Maximum overall width for 2-on-1 is 144" on all 3 cassette sizes.

Fascia Option Surcharge – White, Vanilla, Silver, Bronze, Black

WIDTH TO:	24"	30"	36"	48"	60"	72"	84"	96"	108"	120"	132"	144"
3" Flat	$53	56	61	70	78	89	99	111	122	135	148	163
4" Flat	57	61	67	74	87	101	114	126	139	151	164	179

Deluxe Valance Surcharge (standard height 3-5/8") Direction of fabric insert follows shade installed below. If valance is wider than material width, and shade below is not railroaded; valance will be made with a center seamed fabric insert. See deluxe valance section for more details.

WIDTH TO:	24"	30"	36"	48"	60"	72"	84"	96"	108"	120"	132"	144"
Fabric Insert	$29	32	35	41	48	51	53	59	64	65	71	76

Fabric Valance (standard height 6") For valances wider than material width, material will be railroaded. Includes all Roller Shade materials. (Non-railroaded with center seam available upon request.) See fabric valance section for more details.

WIDTH TO:	24"	30"	36"	48"	60"	72"	84"	96"	108"	120"	132"	144"
IB 4" & 6"	$83	89	98	109	121	141	161	185	205	225	245	265
IB 8" & 12"	91	101	109	143	162	177	201	226	248	274	297	323
OB 4" & 6"	$113	124	134	151	170	185	210	233	257	286	312	340
OB 8" & 12"	126	137	151	172	195	215	243	272	301	337	369	403

Tube Size Upgrade Surcharge – applies only if upgraded to a larger tube. This option only available for shades without top treatment.

TUBE SIZE:	1-1/2"	2"	2-1/2"	3-1/4"
	$33	62	97	108

See page 16 for motorization surcharges

Group 4 – Clutch Roller with Beaded Chain

- 1% E Screen (122")
- 1% Sheerweave 5000 (98")*
- 3% M Screen (122")
- 3% Sheerweave 2410 (126")*
- 3% Sheerweave 4400 (126")*
- 3% Sheerweave 5000 (98")*
- 3% T Screen (98")
- 5% M Screen Deco (98")
- 5% Sheerweave 5000 (98")*
- 7% Sheerweave 5000 (98")*
- 10% Sheerweave 5000 (98")*
- Avila R Blackout (118")
- Illusion (72")
- Linview Blackout (94")

WIDTH TO:	24"	30"	36"	48"	60"	72"	84"	96"	108"	120"	132"	144"
HEIGHT TO:												
36"	$116	118	121	154	180	211	247	293	319	349	372	398
48"	127	130	133	163	201	241	284	335	368	395	431	489
61"	140	144	147	180	207	269	316	378	414	453	488	527
72"	165	168	172	226	271	300	352	419	458	505	546	595
84"	177	183	186	250	299	331	387	459	509	555	611	657
96"	191	195	201	268	323	362	419	503	560	618	662	721
108"	207	211	217	290	350	392	462	542	611	669	736	787
120"	220	226	230	310	377	420	496	586	657	715	787	849
132"	232	238	243	331	401	452	536	628	706	774	846	915
144"	244	251	257	352	428	483	569	670	747	821	909	982

2-on-1 Shades Option: A Two-on-One shade is two shades under one continuous cassette valance. To price a 2-on-1, determine the price of each individual shade then add in the price of two individual cassette valances using the width of each shade. The total sum for the 2-on-1 shade is the sum of both shades and both cassettes. Clutch position only available on the outside of each shade (left shade - left side, right shade - right side).

NOTE: There is a 1/2" gap between the two shades. Please refer to the Product Size Specifications for individual shade sizes. Available with the Beaded Chain Clutch System & RemoteLift Motorization only.

* Stainless steel bead chain is **REQUIRED** under skyline clutch when shade size is 108" x 90" and greater on patterns with *.

Heat sealed hem is strongly recommended on shade size equal, wider than 108" or longer than 90", to improve the appearance of the shade, minimizing waviness, twisting, cupping & curling, especially on shades with railroaded material.

STRONGLY RECOMMEND Heat Sealed Hem as the Bottomrail option for R1015, R1019, R1020 under 5% Sheerweave 5000 to improve appearance of the shade, and minimizing waviness.

Spring assist clutch system aids in raising heavy shades by reducing the pull force by up to 40%. Highly recommend on large shades greater than 44.4 SQ.FT. with shade width greater than 60". Please note Spring Assist is not available with cassettes or 3" fascia.

TouchLift Cordless Option Surcharge – $81

Small Cassette Valance Option Surcharge (with fabric insert) – White, Vanilla, Bronze, and Black

WIDTH TO:	24"	30"	36"	48"	60"	72"	84"	96"	108"	120"	132"	144"
	$54	60	67	78	89	101	112	125	140	155	166	175

Medium Cassette Valance Option Surcharge (with fabric insert) – White, Vanilla, Silver, Bronze, and Black

WIDTH TO:	24"	30"	36"	48"	60"	72"	84"	96"	108"	120"	132"	144"
	$59	67	76	91	103	114	121	134	146	159	172	185

Large Cassette Valance Option Surcharge (with fabric insert) – White, Vanilla, Silver, Bronze, and Black

WIDTH TO:	24"	30"	36"	48"	60"	72"	84"	96"	108"	120"	132"	144"
	$63	69	80	97	112	121	132	144	155	166	179	187

NOTE: Maximum overall width for 2-on-1 is 144" on all 3 cassette sizes.

Fascia Option Surcharge – White, Vanilla, Silver, Bronze, Black

WIDTH TO:	24"	30"	36"	48"	60"	72"	84"	96"	108"	120"	132"	144"
3" Flat	$53	56	61	70	78	89	99	111	122	135	148	163
4" Flat	57	61	67	74	87	101	114	126	139	151	164	179

Deluxe Valance Surcharge (standard height 3-5/8") Direction of fabric insert follows shade installed below. If valance is wider than material width, and shade below is not railroaded; valance will be made with a center seamed fabric insert. See deluxe valance section for more details.

WIDTH TO:	24"	30"	36"	48"	60"	72"	84"	96"	108"	120"	132"	144"
Fabric Insert	$29	32	35	41	48	51	53	59	64	65	71	76

Fabric Valance (standard height 6") For valances wider than material width, material will be railroaded. Includes all Roller Shade materials. (Non-railroaded with center seam available upon request.) See fabric valance section for more details.

WIDTH TO:	24"	30"	36"	48"	60"	72"	84"	96"	108"	120"	132"	144"
IB 4" & 6"	$83	89	98	109	121	141	161	185	205	225	245	265
IB 8" & 12"	91	101	109	143	162	177	201	226	248	274	297	323
OB 4" & 6"	$113	124	134	151	170	185	210	233	257	286	312	340
OB 8" & 12"	126	137	151	172	195	215	243	272	301	337	369	403

Tube Size Upgrade Surcharge – applies only if upgraded to a larger tube. This option only available for shades without top treatment.

TUBE SIZE:	1-1/2"	2"	2-1/2"	3-1/4"
	$33	62	97	108

See page 16 for motorization surcharges

Group 5 – Clutch Roller with Beaded Chain

- 1% Sheerweave 2701 (126")*
- 4% S Screen (122")*
- Astaire (94")
- Brilliance (118")
- Claudio (110")
- Claudio Blackout (110")
- Darien (90")
- Drizzle (78")
- World Textures 1 (78")

WIDTH TO:	24"	30"	36"	48"	60"	72"	84"	96"	108"	120"	132"	144"
HEIGHT TO:												
36"	$120	123	126	164	188	213	250	293	321	351	379	403
48"	134	138	141	173	212	241	285	340	370	406	441	472
61"	147	151	154	193	234	272	321	383	419	461	502	538
72"	164	168	171	225	272	302	360	427	469	516	561	603
84"	178	183	186	246	300	335	395	471	519	568	625	669
96"	193	197	202	269	326	367	433	513	570	630	680	740
108"	207	212	217	289	352	399	469	557	624	685	743	805
120"	222	227	232	311	380	428	508	605	670	736	804	865
132"	237	243	249	335	408	461	549	651	720	793	859	933
144"	252	258	263	356	436	494	580	692	774	844	923	997

2-on-1 Shades Option: A Two-on-One shade is two shades under one continuous cassette valance. To price a 2-on-1, determine the price of each individual shade then add in the price of two individual cassette valances using the width of each shade. The total sum for the 2-on-1 shade is the sum of both shades and both cassettes. Clutch position only available on the outside of each shade (left shade - left side, right shade - right side).

NOTE: There is a 1/2" gap between the two shades. Please refer to the Product Size Specifications for individual shade sizes. Available with the Beaded Chain Clutch System & RemoteLift Motorization only.

***** Stainless steel bead chain is **REQUIRED** under skyline clutch when shade size is 108" x 90" and greater on patterns with *****.

Heat sealed hem is strongly recommended on shade size equal, wider than 108" or longer than 90", to improve the appearance of the shade, minimizing waviness, twisting, cupping & curling, especially on shades with railroaded material.

Spring assist clutch system aids in raising heavy shades by reducing the pull force by up to 40%. Highly recommend on large shades greater than 44.4 SQ.FT. with shade width greater than 60". Please note Spring Assist is not available with cassettes or 3" fascia.

TouchLift Cordless Option Surcharge – $81

Small Cassette Valance Option Surcharge (with fabric insert) – White, Vanilla, Bronze, and Black

WIDTH TO:	24"	30"	36"	48"	60"	72"	84"	96"	108"	120"	132"	144"
	$54	60	67	78	89	101	112	125	140	155	166	175

Medium Cassette Valance Option Surcharge (with fabric insert) – White, Vanilla, Silver, Bronze, and Black

WIDTH TO:	24"	30"	36"	48"	60"	72"	84"	96"	108"	120"	132"	144"
	$59	67	76	91	103	114	121	134	146	159	172	185

Large Cassette Valance Option Surcharge (with fabric insert) – White, Vanilla, Silver, Bronze, and Black

WIDTH TO:	24"	30"	36"	48"	60"	72"	84"	96"	108"	120"	132"	144"
	$63	69	80	97	112	121	132	144	155	166	179	187

NOTE: Maximum overall width for 2-on-1 is 144" on all 3 cassette sizes.

Fascia Option Surcharge – White, Vanilla, Silver, Bronze, Black

WIDTH TO:	24"	30"	36"	48"	60"	72"	84"	96"	108"	120"	132"	144"
3" Flat	$53	56	61	70	78	89	99	111	122	135	148	163
4" Flat	57	61	67	74	87	101	114	126	139	151	164	179

Deluxe Valance Surcharge (standard height 3-5/8") Direction of fabric insert follows shade installed below. If valance is wider than material width, and shade below is not railroaded; valance will be made with a center seamed fabric insert. See deluxe valance section for more details.

WIDTH TO:	24"	30"	36"	48"	60"	72"	84"	96"	108"	120"	132"	144"
Fabric Insert	$29	32	35	41	48	51	53	59	64	65	71	76

Fabric Valance (standard height 6") For valances wider than material width, material will be railroaded. Includes all Roller Shade materials. (Non-railroaded with center seam available upon request.) See fabric valance section for more details.

WIDTH TO:	24"	30"	36"	48"	60"	72"	84"	96"	108"	120"	132"	144"
IB 4" & 6"	$83	89	98	109	121	141	161	185	205	225	245	265
IB 8" & 12"	91	101	109	143	162	177	201	226	248	274	297	323
OB 4" & 6"	$113	124	134	151	170	185	210	233	257	286	312	340
OB 8" & 12"	126	137	151	172	195	215	243	272	301	337	369	403

Tube Size Upgrade Surcharge – applies only if upgraded to a larger tube. This option only available for shades without top treatment.

TUBE SIZE:	1-1/2"	2"	2-1/2"	3-1/4"
	$33	62	97	108

See page 16 for motorization surcharges

Group 6 – Clutch Roller with Beaded Chain

- 1% Sheerweave 2500 (126")*
- Baroque (78")
- Brilliance Blackout (118")
- Fiona (78")
- World Textures 1 Blackout (78")

WIDTH TO:	24"	30"	36"	48"	60"	72"	84"	96"	108"	120"	132"	144"
HEIGHT TO:												
36"	$126	128	131	170	199	233	279	330	361	394	427	457
48"	144	148	151	193	229	274	324	381	426	461	503	542
61"	157	161	165	212	257	312	367	440	486	529	576	622
72"	185	190	193	256	311	352	413	495	551	598	651	705
84"	205	210	214	284	345	388	461	553	603	665	732	787
96"	223	228	233	309	379	428	505	602	671	743	802	870
108"	242	247	252	336	415	466	550	656	735	807	876	946
120"	258	264	269	367	449	511	595	714	796	876	957	1029
132"	277	283	289	392	480	545	641	770	847	943	1032	1122
144"	293	300	306	421	509	585	690	823	921	1013	1108	1206

2-on-1 Shades Option: A Two-on-One shade is two shades under one continuous cassette valance. To price a 2-on-1, determine the price of each individual shade then add in the price of two individual cassette valances using the width of each shade. The total sum for the 2-on-1 shade is the sum of both shades and both cassettes. Clutch position only available on the outside of each shade (left shade - left side, right shade - right side).

NOTE: There is a 1/2" gap between the two shades. Please refer to the Product Size Specifications for individual shade sizes. Available with the Beaded Chain Clutch System & RemoteLift Motorization only.

***** Stainless steel bead chain is **REQUIRED** under skyline clutch when shade size is 108" x 90" and greater on patterns with *****.

Heat sealed hem is strongly recommended on shade size equal, wider than 108" or longer than 90", to improve the appearance of the shade, minimizing waviness, twisting, cupping & curling, especially on shades with railroaded material.

Spring assist clutch system aids in raising heavy shades by reducing the pull force by up to 40%. Highly recommend on large shades greater than 44.4 SQ.FT. with shade width greater than 60". Please note Spring Assist is not available with cassettes or 3" fascia.

TouchLift Cordless Option Surcharge – $81

Small Cassette Valance Option Surcharge (with fabric insert) – White, Vanilla, Bronze, and Black

WIDTH TO:	24"	30"	36"	48"	60"	72"	84"	96"	108"	120"	132"	144"
	$54	60	67	78	89	101	112	125	140	155	166	175

Medium Cassette Valance Option Surcharge (with fabric insert) – White, Vanilla, Silver, Bronze, and Black

WIDTH TO:	24"	30"	36"	48"	60"	72"	84"	96"	108"	120"	132"	144"
	$59	67	76	91	103	114	121	134	146	159	172	185

Large Cassette Valance Option Surcharge (with fabric insert) – White, Vanilla, Silver, Bronze, and Black

WIDTH TO:	24"	30"	36"	48"	60"	72"	84"	96"	108"	120"	132"	144"
	$63	69	80	97	112	121	132	144	155	166	179	187

NOTE: Maximum overall width for 2-on-1 is 144" on all 3 cassette sizes.

Fascia Option Surcharge – White, Vanilla, Silver, Bronze, Black

WIDTH TO:	24"	30"	36"	48"	60"	72"	84"	96"	108"	120"	132"	144"
3" Flat	$53	56	61	70	78	89	99	111	122	135	148	163
4" Flat	57	61	67	74	87	101	114	126	139	151	164	179

Deluxe Valance Surcharge (standard height 3-5/8") Direction of fabric insert follows shade installed below. If valance is wider than material width, and shade below is not railroaded; valance will be made with a center seamed fabric insert. See deluxe valance section for more details.

WIDTH TO:	24"	30"	36"	48"	60"	72"	84"	96"	108"	120"	132"	144"
Fabric Insert	$29	32	35	41	48	51	53	59	64	65	71	76

Fabric Valance (standard height 6") For valances wider than material width, material will be railroaded. Includes all Roller Shade materials. (Non-railroaded with center seam available upon request.) See fabric valance section for more details.

WIDTH TO:	24"	30"	36"	48"	60"	72"	84"	96"	108"	120"	132"	144"
IB 4" & 6"	$83	89	98	109	121	141	161	185	205	225	245	265
IB 8" & 12"	91	101	109	143	162	177	201	226	248	274	297	323
OB 4" & 6"	$113	124	134	151	170	185	210	233	257	286	312	340
OB 8" & 12"	126	137	151	172	195	215	243	272	301	337	369	403

Tube Size Upgrade Surcharge – applies only if upgraded to a larger tube. This option only available for shades without top treatment.

TUBE SIZE:	1-1/2"	2"	2-1/2"	3-1/4"
	$33	62	97	108

See page 16 for motorization surcharges

Group 7 – Clutch Roller with Beaded Chain

- Alexandria (78")
- Cusco (110")
- Moravia (96")
- Sunscreen 7000 (118")*
- World Textures 2 (80")
- World Textures 2 Blackout (80")

WIDTH TO:	24"	30"	36"	48"	60"	72"	84"	96"	108"	120"	132"	144"
HEIGHT TO:												
36"	$152	156	160	208	243	294	351	414	455	496	539	579
48"	176	182	185	235	284	344	410	482	537	584	637	687
61"	202	207	211	268	324	395	464	558	616	672	731	791
72"	237	243	248	323	394	447	526	628	698	762	829	898
84"	263	269	276	359	437	494	585	701	767	847	932	1005
96"	286	294	301	392	481	545	644	765	854	946	1022	1109
108"	310	318	325	427	527	594	700	836	937	1029	1117	1206
120"	332	340	348	465	570	653	761	911	1014	1117	1223	1315
132"	357	365	374	499	611	695	820	980	1082	1204	1319	1432
144"	378	388	397	534	650	747	880	1051	1175	1294	1415	1542

2-on-1 Shades Option: A Two-on-One shade is two shades under one continuous cassette valance. To price a 2-on-1, determine the price of each individual shade then add in the price of two individual cassette valances using the width of each shade. The total sum for the 2-on-1 shade is the sum of both shades and both cassettes. Clutch position only available on the outside of each shade (left shade - left side, right shade - right side).

NOTE: There is a 1/2" gap between the two shades. Please refer to the Product Size Specifications for individual shade sizes. Available with the Beaded Chain Clutch System & RemoteLift Motorization only.

Heat sealed hem is strongly recommended on shade size equal, wider than 108" or longer than 90", to improve the appearance of the shade, minimizing waviness, twisting, cupping & curling, especially on shades with railroaded material.

Spring assist clutch system aids in raising heavy shades by reducing the pull force by up to 40%. Highly recommend on large shades greater than 44.4 SQ.FT. with shade width greater than 60". Please note Spring Assist is not available with cassettes or 3" fascia.

TouchLift Cordless Option Surcharge – $81

Small Cassette Valance Option Surcharge (with fabric insert) – White, Vanilla, Bronze, and Black

WIDTH TO:	24"	30"	36"	48"	60"	72"	84"	96"	108"	120"	132"	144"
	$54	60	67	78	89	101	112	125	140	155	166	175

Medium Cassette Valance Option Surcharge (with fabric insert) – White, Vanilla, Silver, Bronze, and Black

WIDTH TO:	24"	30"	36"	48"	60"	72"	84"	96"	108"	120"	132"	144"
	$59	67	76	91	103	114	121	134	146	159	172	185

Large Cassette Valance Option Surcharge (with fabric insert) – White, Vanilla, Silver, Bronze, and Black

WIDTH TO:	24"	30"	36"	48"	60"	72"	84"	96"	108"	120"	132"	144"
	$63	69	80	97	112	121	132	144	155	166	179	187

NOTE: Maximum overall width for 2-on-1 is 144" on all 3 cassette sizes.

Fascia Option Surcharge – White, Vanilla, Silver, Bronze, Black

WIDTH TO:	24"	30"	36"	48"	60"	72"	84"	96"	108"	120"	132"	144"
3" Flat	$53	56	61	70	78	89	99	111	122	135	148	163
4" Flat	57	61	67	74	87	101	114	126	139	151	164	179

Deluxe Valance Surcharge (standard height 3-5/8") Direction of fabric insert follows shade installed below. If valance is wider than material width, and shade below is not railroaded; valance will be made with a center seamed fabric insert. See deluxe valance section for more details.

WIDTH TO:	24"	30"	36"	48"	60"	72"	84"	96"	108"	120"	132"	144"
Fabric Insert	$29	32	35	41	48	51	53	59	64	65	71	76

Fabric Valance (standard height 6") For valances wider than material width, material will be railroaded. Includes all Roller Shade materials. (Non-railroaded with center seam available upon request.) See fabric valance section for more details.

WIDTH TO:	24"	30"	36"	48"	60"	72"	84"	96"	108"	120"	132"	144"
IB 4" & 6"	$83	89	98	109	121	141	161	185	205	225	245	265
IB 8" & 12"	91	101	109	143	162	177	201	226	248	274	297	323
OB 4" & 6"	$113	124	134	151	170	185	210	233	257	286	312	340
OB 8" & 12"	126	137	151	172	195	215	243	272	301	337	369	403

Tube Size Upgrade Surcharge – applies only if upgraded to a larger tube. This option only available for shades without top treatment.

TUBE SIZE:	1-1/2"	2"	2-1/2"	3-1/4"
	$33	62	97	108

See page 16 for motorization surcharges

Group 8 – Clutch Roller with Beaded Chain

- 4% Silver Screen (94")
- Flocke Blackout (94")*
- Jasper (110")
- Uptown (78")
- Uptown Room Darkening (78")

WIDTH TO:	24"	30"	36"	48"	60"	72"	84"	96"	108"	120"	132"	144"
HEIGHT TO:												
36"	$200	204	209	277	326	394	469	555	609	663	718	771
48"	229	235	241	314	378	459	546	643	716	777	846	913
61"	261	268	274	358	432	526	617	742	820	893	971	1049
72"	307	315	322	431	524	595	698	836	927	1009	1099	1189
84"	339	348	356	478	583	654	775	931	1016	1122	1235	1329
96"	371	380	389	520	639	723	853	1013	1131	1252	1352	1467
108"	400	411	419	566	698	784	927	1106	1239	1362	1476	1594
120"	427	437	448	618	756	863	1005	1205	1342	1476	1615	1736
132"	459	470	482	662	809	919	1082	1297	1430	1591	1743	1891
144"	487	500	511	710	859	986	1163	1390	1553	1708	1870	2036

2-on-1 Shades Option: A Two-on-One shade is two shades under one continuous cassette valance. To price a 2-on-1, determine the price of each individual shade then add in the price of two individual cassette valances using the width of each shade. The total sum for the 2-on-1 shade is the sum of both shades and both cassettes. Clutch position only available on the outside of each shade (left shade - left side, right shade - right side).

NOTE: There is a 1/2" gap between the two shades. Please refer to the Product Size Specifications for individual shade sizes. Available with the Beaded Chain Clutch System & RemoteLift Motorization only.

***** Stainless steel bead chain is **REQUIRED** under skyline clutch when shade size is 108" x 90" and greater on patterns with *****.

Heat sealed hem is strongly recommended on shade size equal to or greater than 108" x 90", to improve the appearance of the shade, minimizing waviness, twisting, cupping & curling, etc.

TouchLift Cordless Option Surcharge – $81

Small Cassette Valance Option Surcharge (with fabric insert) – White, Vanilla, Bronze, and Black

WIDTH TO:	24"	30"	36"	48"	60"	72"	84"	96"	108"	120"	132"	144"
	$54	60	67	78	89	101	112	125	140	155	166	175

Medium Cassette Valance Option Surcharge (with fabric insert) – White, Vanilla, Silver, Bronze, and Black

WIDTH TO:	24"	30"	36"	48"	60"	72"	84"	96"	108"	120"	132"	144"
	$59	67	76	91	103	114	121	134	146	159	172	185

Large Cassette Valance Option Surcharge (with fabric insert) – White, Vanilla, Silver, Bronze, and Black

WIDTH TO:	24"	30"	36"	48"	60"	72"	84"	96"	108"	120"	132"	144"
	$63	69	80	97	112	121	132	144	155	166	179	187

NOTE: Maximum overall width for 2-on-1 is 144" on all 3 cassette sizes.

Fascia Option Surcharge – White, Vanilla, Silver, Bronze, Black

WIDTH TO:	24"	30"	36"	48"	60"	72"	84"	96"	108"	120"	132"	144"
3" Flat	$53	56	61	70	78	89	99	111	122	135	148	163
4" Flat	57	61	67	74	87	101	114	126	139	151	164	179

Deluxe Valance Surcharge (standard height 3-5/8") Direction of fabric insert follows shade installed below. If valance is wider than material width, and shade below is not railroaded; valance will be made with a center seamed fabric insert. See deluxe valance section for more details.

WIDTH TO:	24"	30"	36"	48"	60"	72"	84"	96"	108"	120"	132"	144"
Fabric Insert	$29	32	35	41	48	51	53	59	64	65	71	76

Fabric Valance (standard height 6") For valances wider than material width, material will be railroaded. Includes all Roller Shade materials. (Non-railroaded with center seam available upon request.) See fabric valance section for more details.

WIDTH TO:	24"	30"	36"	48"	60"	72"	84"	96"	108"	120"	132"	144"
IB 4" & 6"	$83	89	98	109	121	141	161	185	205	225	245	265
IB 8" & 12"	91	101	109	143	162	177	201	226	248	274	297	323
OB 4" & 6"	$113	124	134	151	170	185	210	233	257	286	312	340
OB 8" & 12"	126	137	151	172	195	215	243	272	301	337	369	403

Tube Size Upgrade Surcharge – applies only if upgraded to a larger tube. This option only available for shades without top treatment.

TUBE SIZE:	1-1/2"	2"	2-1/2"	3-1/4"
	$33	62	97	108

See page 16 for motorization surcharges

LARGE DECORATIVE PATTERN FABRICS

- Fabric Repeat

Fiona:
Approximate Repeat Size: 8.4" x 8.4"

Baroque:
Approximate Repeat Size: 12.6" x 25.4"

Alexandria:
Approximate Repeat Size: 12.6" x 25.4"

- These patterns will not be matched on shades ordered together, or with side by side shades. Pattern will not be symmetrically centered on the shade. The way the material comes off the roll is the way the shade will be made.

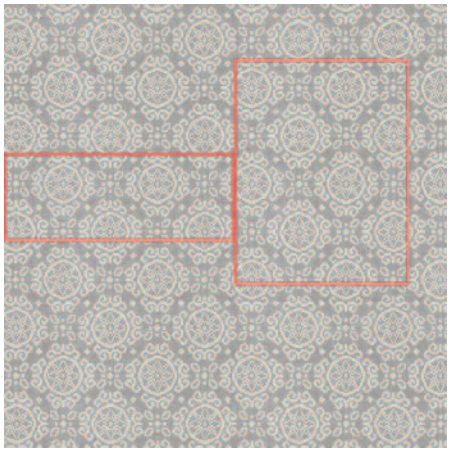

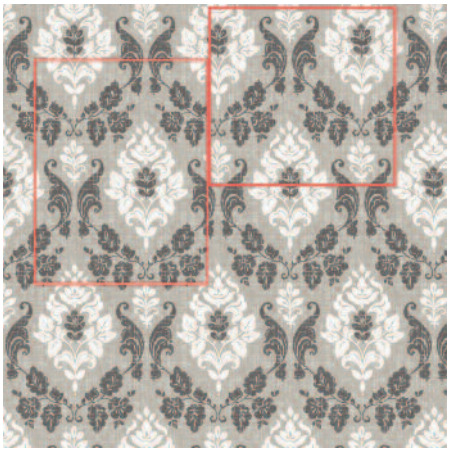

TUBE SIZE UPGRADE

Tube upgrade to larger size is available for shades without top treatment to best match the overall appearance for side by side shades or varying shade size in one room. Based on the shade size and properties of the overall shade, tube size is determined and defaulted. Please note, upgrade can only be upgrade to larger tube size available under each operating system.

		Available Tube Sizes				
Operating System		**1-1/8"**	**1-1/2"**	**2"**	**2-1/2"**	**3-1/4"**
Clutch Lift	**Skyline**	X	X	X	X	-
	R Series	X	X	X	-	-
TouchLift		-	X	-	-	-
RemoteLift Motorization		-	X	-	-	-
Hardwired Motorization	**Sonesse 30 (ST30)**	-	X	-	-	-
	Sonesse 50 (ST50)	-	-	X	X	X
	Sonesse 50 Ultra Quiet (ST50R)	-	-	X	X	X

SIMPLICITY RECHARGEABLE AND POWERWAND OPTIONS: EXTRA CHARGE – SPECIFY ON ORDER

USE APPROPRIATE CLUTCH ROLLER GRID FOR SHADE PRICE, THEN ADD EXTRA CHARGE(S) BELOW.

- Simplicity Rechargeable Motor ..... **add $237 per motor**
  - 5 Channel Remote Control (Black Part #CS5138 or White Part #CS5138W) ..... **add $36 each**
  - Solar Panel (Part #CS52096 Solar Panel & mounting brackets) (Part #02-70-9021 Mounting bracket screws) ..... **add $131 each**
- PowerWand™ ..... **add $99 per shade**
  - PowerWand™ Options (must be specified):
    1) Control Side (Left or Right)
    2) Wand Color (Black or White)
    3) Wand Length: 1 foot (12"), 2 feet (24"), 3 feet (36"), 4 feet (48"), 5 feet (60")
- Plug-in Charger (Can be used for both Simplicity Rechargeable and PowerWand) ..... Part #CS5199 ..... **add $27 each**

REMOTELIFT OPTIONS: EXTRA CHARGE – SPECIFY ON ORDER (Must select RemoteLift power source* when ordering)

USE APPROPRIATE CLUTCH ROLLER GRID FOR SHADE PRICE, THEN ADD REMOTELIFT EXTRA CHARGE(S) BELOW.

- Radio Frequency (RF) RemoteLift Motorization Upgrade ..... **add $268 per shade**
- Radio Frequency (RF) Remote Control – 1 Channel ..... Part #RC445069 ..... **add $84 each**
- Radio Frequency (RF) Remote Control – 5 Channel ..... Part #RC445079 ..... **add $108 each**
- Radio Frequency (RF) Remote Control – 16 Channel (available as a separate part order only) ..... Part #1811081 ..... **add $390 each**
- Radio Frequency (RF) Wireless Wall Switch – 1 Channel ..... Part #RC445135 ..... **add $212 each**
- Radio Frequency (RF) Wireless Wall Switch – 5 Channel ..... Part #RC445136 ..... **add $212 each**
- Radio Frequency (RF) Programmable Timer – 1 Channel ..... Part #1805237A ..... **add $341 each**
- RTS – Smoove 1 RTS ..... Part #1811533 ..... **add $111 each**
- RTS – myLink RTS interface ..... Part #1811403 ..... **add $319 each**

- Radio Frequency (RF) Reloadable Single Battery Wand** ..... Part #KITRWR ..... **add $115 each**
- Radio Frequency (RF) Reloadable Dual Battery Wand** ..... Part #KITRDWR ..... **add $232 each**
- Dual Wand Y harness (required) ..... Part #9018625 ..... **add $9 each**
- Radio Frequency (RF) Transformer ..... Part #1822445 ..... **add $116 each**
- Radio Frequency (RF) Battery Wand Extension Wire – 10" ..... Part #9018623 ..... **add $9 each**
- Radio Frequency (RF) Battery Wand Extension Wire – 48" ..... Part #9016736 ..... **add $12 each**
- Radio Frequency (RF) Battery Wand Extension Wire – 96" ..... Part #9018624 ..... **add $17 each**
- Radio Frequency (RF) Lithium Batteries (Reloadable Wand – 8 each) ..... Part #9014834 ..... **add $38 each**

- Solar Recharge Kit ..... Part #9019034 ..... **add $209 each**
  (**batteries are included if option is selected under a shade, not included if ordered as a kit alone.)**
  (Includes solar panel, 10" Y harness, 12v reloadable battery tube, tube mounting clips, glass mount adhesive tape, solar panel mounting brackets – 4 qty.)
- NiMh Rechargeable Batteries (quantity of 10) ..... Part #9018621 ..... **add $59 each**
- Plug-in AC Battery Rapid Charger (for solar recharge kit only) (includes 12" cable) ..... Part #9018620 ..... **add $205 each**
- 48" Extension Cable for Y Harness ..... Part #9016736 ..... **add $14 each**

Notes: * RemoteLift power source options: Reloadable Single Battery Wand, Reloadable Dual Battery Wand, and Transformer (plugs into standard wall outlet)
** Each Reloadable Battery Wand comes with a set of 8 AA lithium batteries on initial shade orders. The part numbers above reference the battery wands only. The part # for replacement pack of 8 AA lithium batteries is #9014834.

When ordering multiple motorized shades/remotes, please provide programming instructions. Otherwise, all shades will be programmed to one remote.

HARDWIRED MOTORIZATION

Hardwired Motorization is available with a variety of lifting capacities, "quietness", power options and control options. Please see separate Hardwired Motorization Price List & Product Info Guide for complete details.

MOTOR READY

Dealer's Own Motorization
The factory will provide roller shade materials ready for Dealer or Automation Companies to motorize. These shades styles are also known to some as Motor Ready.

These shade materials are produced as follows:

Motor Ready Shades. Motor Ready shades are **PRICED** and **MANUFACTURED** to the "**net width**" specified by dealer. (Dealer is required to make all necessary width deductions to allow for motor and brackets being used, and order under **Mount Type: Exact End to End Mount.**)

- Factory automatically adds extra material length required for tube wrap at no additional charge.
- Dealer specifies tube size. (1-1/2" extruded ribbed, and 2" smooth at no additional charge. 2-1/2" extruded ribbed and 3-1/4" extruded ribbed tubes are available with applicable surcharge. (Contact customer service for surcharge information.)
- Motor Ready shades do not include notch on the tube, clutch, idler end, crown/drive, and brackets.

Clutch Lift Continuous Control
Features continuous bead chain. When chain is pulled, the clutch rotates the roller tube lifting and lowering the shade. Chain bead stops set at upper and lower shade limits.

Defaulted Beaded Loop Length

SHADE HEIGHT	LOOP DROP
12" to 15 7/8"	2/3 of shade height
16" to 29 7/8"	3/4 of shade height
30" - 35 7/8"	24" loop
36" - 41 7/8"	30" loop
42" - 47 7/8"	36" loop
48" - 53 7/8"	42" loop
54" - 59 7/8"	48" loop
60" - 65 7/8"	54" loop
66" - 71 7/8"	60" loop
72" - 77 7/8"	66" loop
78" - 89 7/8"	72" loop
90" - 101 7/8"	84" loop
102" - 113 7/8"	96" loop
114 - above	3/4 of shade height

Note: Custom beaded loop lengths may be ordered, but they must be LONGER than the standard loop size for a given shade height (as indicated above). Loop lengths cannot be made shorter than the standard size because the shade will not fully operate through the entire range.

Plastic bead chains are available in the following colors:
• Black • Bronze • Vanilla • White

Metal bead chain available at no additional charge in the following colors/finishes:
• Antique Brass • Oil Rubbed Bronze • Stainless Steel
• Nickel • White • Black

NOTE: We strongly recommend that all shades over 108" x 90" be ordered with a metal bead chain.

Stainless steel chain is REQUIRED on some heavy materials with shade size equal or greater than 108" x 90" under skyline clutch, please refer to price pages for detail.

TouchLift Cordless
- Shade lowers manually by hand
- Shade slowly raises automatically with slight pull on the bottom hem
- Shade comes pre-assembled on a mounting bar/rail. The rail and mounting brackets are available in white or black.
- Minimum shade width – 18"
- Minimum shade height – 24"
- Maximum shade size – **see Product Size Specifications – TouchLift** section for detail.

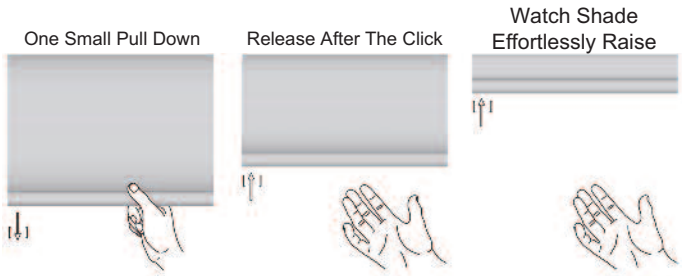

Speed reducer allows shade to lift slowly

Inside/Ceiling Mount **Outside Mount**

PowerWand™ Motorization

- PowerWand™ Rechargeable option is an easy, cord free motorized operation for the budget savvy homeowner.

PowerWand™ Rechargeable Shades Operation

- Press the up or down button on the pendant to raise or lower the shading to your desired position. No programming is required with PowerWand™ as upper and lower limits are set at the factory. If desired, upper and lower limits can be adjusted in the field.
- Please refer to the installation instructions for instructions on resetting the upper and lower limits and setting a favorites position can be programmed on-site.

PowerWand™ Appearance

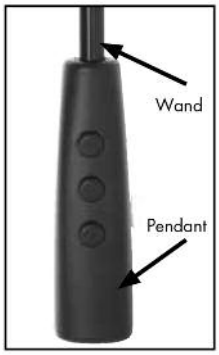

- The PowerWand™ Rechargeable wand and pendant is attached to the head rail and requires no additional mounting.
- The wand and pendant hangs down the front of the shades from the head rail.
- Pendant is 2-1/2” long.
- The pendant does not need to be mounted to the wall to operate the shade.

PowerWand™ Options

- Wand is available in Black or White (there is no default)
- Wand is available in 1 foot increments from 1 to 5 feet (there is no default)
- Wand is available on either the right or left side of the shade (there is no default)

White

Black Shown with Plug-In Charger

PowerWand™ Battery Life

- The battery life will vary based on the type of window covering selected, the size and weight of the window covering and the number of times you operate the blind on a daily basis.

Battery Charger

- 8.4 Volt charger requires a standard power outlet to recharge the battery. The charger must be specified when ordering the PowerWand motorization option. The charger plugs into the charger port on the side of the pendant. The charger is black and comes with a 156” wire. The dimensions are 1” wide x 2-1/2” length x 1-3⁄4” deep.

Simplicity Rechargeable

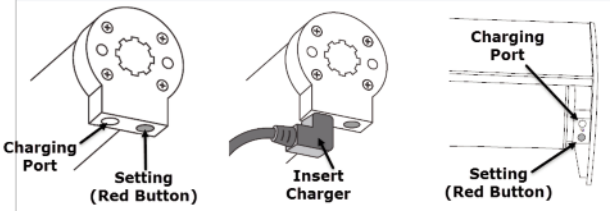

- The Rechargeable Simplicity motor program features an integrated rechargeable lithium ion battery in the motor casing and is fully concealed by the inner tube.
- Rechargeable battery is included with the motor. The average battery charge will last 6-12 months based on an average sized shade raised and lowered once per day. The life of the battery charge will vary based on the type of window covering selected, the size and weight of the window covering and the number of times the shade is operated on a daily basis. The battery can be recharged up to 500 times. It takes approximately 5 hours to recharge the motor when fully depleted.

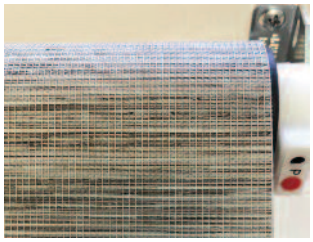

Battery Charger

- An 8.4 Volt charger requires a standard power outlet to recharge the battery. The charger must be specified when ordering Simplicity Rechargeable Motorized shade option. The charger plugs into the charging port of the motor. The charger is black and comes with a 156” wire. The dimensions are 1” wide x 2-1/2” length x 1-3/4" deep. Sold separately.

Solar Panel Recharge Option

- Plugs in to any Simplicity Rechargeable motorized shading (does not work with PowerWand). Provides constant trickle charge to 7.4v Li-ION Rechargeable battery packs. Does not require direct sunlight, but performs best in regular direct sunlight applications. Will prolong the life of the charge of the 7.4v rechargeable battery packs, and in some applications will maintain charge indefinitely.
- Life of charge is subject to application variables such as, size and weight of shade, frequency of use, amount of direct sunlight exposure, etc.

5 Channel Remote

- The remote can operate up to five shadings simultaneously, individually or in groups. Remotes and holders are available in white or black. The remote comes with a holder which can be mounted to a wall for easy storage. The range of the remote is approximately 80 feet.

White
(Part #CS5138W)

Black
(Part #CS5138)

Please Note:

- Not all motors run at the same rate of speed.
- Simplicity motors have a “Favorites” position setting. To set a “Favorites” position, follow instructions provided in the installation instructions.

REMOTELIFT™ MOTORIZATION: OVERVIEW

With RemoteLift™ motorized shades, enjoy a better quality of life and have more time to enjoy life's daily pleasures. At the touch of a button, window coverings can be instantly adjusted to changing activities or the varying sun conditions.

An ideal solution is to manage glare with a RemoteLift hand-held remote control. At the simple touch of a button, shades will open or close to adjust to the changing sunlight in a room.

RemoteLift Radio Frequency (RF) motorized shades provide ultra-quiet operation. The system can operate shades from virtually anywhere in the house without direct line of sight. Similar to how a garage door opener operates, radio signals travel through walls and make it possible to control multiple coverings throughout the home alone or as a group. The RF system is also available in a 5 or 16 channel version. The multi-channel RF system allows for independent control of individual shades and/or group control.

RemoteLift motorization systems provide many benefits, such as improving energy efficiency, providing easily controllable privacy and also enhancing home security.

The RemoteLift RF timer allows users to program specific times of the day to automatically adjust shades in different areas of the house, protecting interiors from the fading effects of direct sunlight. This feature provides added security to an unoccupied home by creating a lived in look even while homeowners are away on vacation.

The battery powered RemoteLift RF wireless wall switch allows shades to be controlled when entering or exiting a room, just like the lights. The switch may be seamlessly installed without wiring next to any light switch or stand alone, and is never misplaced. This one touch privacy helps create the ideal environment whether preparing for a bath, relaxing in bed or enjoying time with the family at home.

The Smoove® 1 RTS surface-mounted wall switch avoids cutting into drywall. This single channel, battery-operated solution is easy to install, and doesn't require an electrician. It's an intuitive, surface mount control.

The myLink™ RTS Smartphone and Tablet Interface is a WiFi to Radio Technology Somfy® (RTS) bridge that can control up to 5 channels of RTS motorized products using the Somfy myLink apps for iOS and Android devices. Through the app, users can send immediate RTS commands, create scenes (a group of motorized products working together) and schedules (timed events). Users may access their myLinks from anywhere with the app's remote access feature. Though the myLink is a single-zone controller, multiple myLinks can be joined within the same system for multi-zone control.

RemoteLift motorized shades are powered by Somfy, an industry leader in automated window coverings. All motorized products are backed by a 5 year warranty.

REMOTELIFT™ MOTORIZATION: FEATURES & OPTIONS

RADIO FREQUENCY (RF) MOTORIZATION FEATURES:

- Highest quality patent protected design by Somfy
- Advanced motor, capable of lifting shades up to 8 LBS.
- Quiet operation
- Motor is fully enclosed within the headrail
- Installs with standard installation hardware
- RF motor is programmable

Note: The power source must be selected when ordering. The options are: reloadable single or dual battery wand, and the plug-in transformer.

Radio Frequency (RF) RemoteLift Motor Motor (Part #1002481) Crown (Part #9018475) Drive (Part #9018477)	• Fully concealed motor unit • Flexible and programmable operation • 12 Volt System
Radio Frequency (RF) Remote Control (must order separately) Color: 2 tone white and gray 2 Types: programmable 1-channel and programmable 5-channel (1-Channel: Part #RC445069) (5-Channel: Part #RC445079) (16-Channel: Part #1811081 – available as a separate part order only)	• Controls shade operation • Programmable features • Easy shade positioning up to 90 feet away • 5-channel remote allows for multiple and independent shade operation 5-channel remote programming can be done by special request prior to shipping. Contact customer service with your programming instructions otherwise all shades will be programmed on channel 1.
Single Battery Wand (reloadable) and Installation Clips Wand (Part #RC445268) Clips (Part #9013263) 8 AA Lithium Batteries (not shown) (Part #9014834)	• On initial shade orders, the reloadable wand comes with 8 AA lithium batteries • Comes with mounting installation clips • For parts ordering the reloadable wand INCLUDING 8 AA lithium batteries, order both part #s • Replacement 8 AA lithium batteries may also be ordered separately
Optional, Dual Battery Wand (reloadable) and Installation Clips (Kit: Part #KITRDW) (Clips: Part #9013263) (Y-Harness: Part #9018625) (Y-Harness Ext. Cable: Part #9016736)	• On initial shade orders, the reloadable wands come with 16 AA lithium batteries • Combines (reloadable) Single Battery Wands for added lifting capacity and/or extended life • Comes with mounting installation clips
Transformer 10' Cable (Part #1822445)	• Plug-in operation, no batteries required • Works in standard wall outlet (10' wire length)
Battery Wand Extension Cables Color: White (10" Cable: Part #9018623) (48" Cable: Part #9016736) (96" Cable: Part #9018624)	• Available in 10", 48" and 96" • Allows battery wand installation away from headrail
Wireless Wall Switch Color: white 2 Types: programmable 1-channel and 5-channel (1 Channel: Part #RC445135) (5 Channel: Part #RC445136)	• Control wireless operation from the wall up to 90 feet away • Works like turning a light on/off
Programmable Timer 1 Type: programmable 1-channel (Part #1805237A)	• Program operation based on pre-set times • Excellent home security feature
Smoove 1 RTS – single channel surface mount control Color: Pure (Part #1811533)	• Battery operated • Tactile buttons for UP/DOWN/MY/STOP control • LED for visual feedback
myLink Interface Color: White (Part #1811403)	• Smartphone and Tablet Interface 120V AC • App Control • Remote Access • Compatible and controls all Radio Technology Somfy RTS products. • Can control up to 5 channels of RTS motorized products using myLink apps for iOS and android devices.
WireFree™ Solar Pack Kit – Batteries NOT included (Part #9019034) Photovoltaic Panel "Y" Harness (Part #9018625) Battery + Battery Tube (Part #9018621) **Accessories** Plug-in AC battery (Part #9018620) rapid charger (required for charging battery prior to installation)	• Uses sunlight to power a motorized shade. • Easy to install. Low profile, easy to conceal. • Solar Recharge Kit (**batteries NOT included if ordered as stand alone kit**) (Part #9019034) – Includes solar panel, 10" Y harness, 12v reloadable battery tube, tube mounting clips, glass mount adhesive tape, solar panel mounting brackets – 4 qty.) • NiMh Rechargeable Batteries (quantity of 10) (Part #9018621) • Plug-in AC Battery Rapid Charger (for solar recharge kit only) (includes 12" cable) (Part #9015781) • 48" Extension Cable for Y Harness (Part #9016736)

CASSETTES

Large Cassette Valance
- Available with Clutch Control, TouchLift Cordless and Motorization
- Features a shade fabric insert. Insert fabric will run the same direction as the shade fabric.
- Dimensions – 3-7/8" high x 3-7/8" deep
- Colors – White, Vanilla, Silver, Bronze, Black

Medium Cassette Valance
- Available with Clutch Control, TouchLift Cordless, and Motorization
- Features a shade fabric insert. Insert fabric will run the same direction as the shade fabric.
- Dimensions – 3-1/8" high x 3-3/4" deep
- Colors – White, Vanilla, Silver, Bronze, Black

Small Cassette Valance
- Available with Clutch Control
- Features a shade fabric insert. Insert fabric will run the same direction as the shade fabric.
- Dimensions – 2-1/2" high x 2-1/2" deep
- Colors – White, Vanilla, Bronze, Black

FASCIAS

3" and 4" Fascia
- Available with Clutch Control and Motorization
- Flat Style Only
- RemoteLift battery wands must be externally mounted to window sill or wall
- Colors – White, Vanilla, Silver, Bronze, Black

Dimensions –
<u>Skyline</u>
3" – 3-3/8" high x 3-1/8" deep
4" – 3-7/8" high x 4-1/8" deep

<u>R-Series</u>
3" – 3" high x 3-1/16" deep
4" – 4" high x 4-1/16" deep

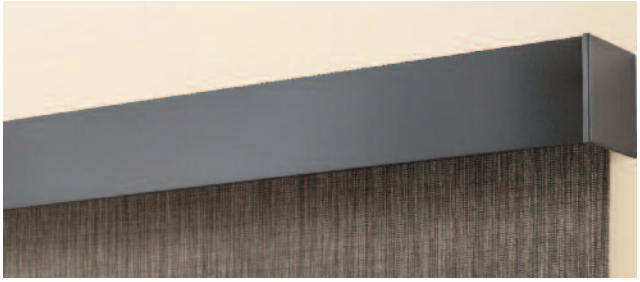

Flat Style (3" and 4") painted finish

3" Fascia

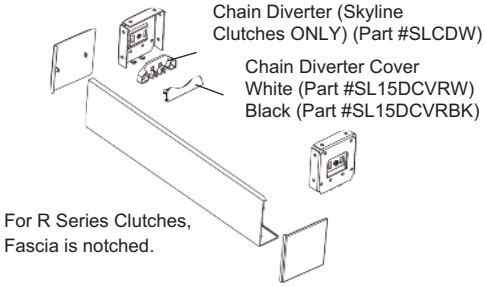

4" Fascia

Fascia clip is required under Skyline.

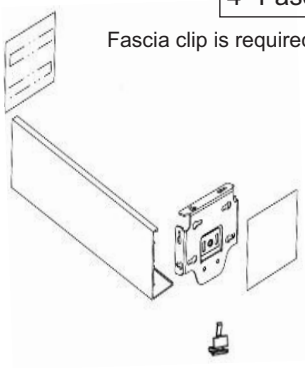

DELUXE VALANCE

Optional Deluxe Valance has clear edge groovers to hold the coordinating fabric in place.

- For inside mount no returns, the factory deducts 1/8"
- For inside mount with returns, the factory adds 1-1/4"
- For outside mount no returns, the factory adds 1"
- For outside mount with returns, the factory adds 2-3/8"

Outside Mount:
Returns length only available in 3-1/2"

Inside Mount:
Default No returns

Custom size returns available:
Minimum return length 2-1/4"
Maximum return length 3-1/2"

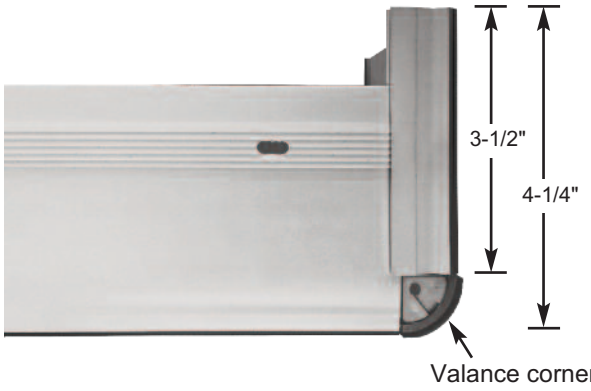

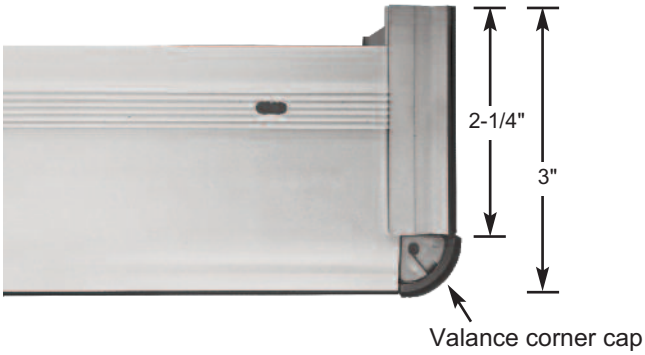

Note: When ordering returns, valance corner cap adds 3/4" to the valance return depth.

Deluxe Valance Insert fabric will run the same direction as the shade fabric. If valance is wider than material width, and shade fabric is not railroaded; insert fabric will have a center seam.

WIDTH TO:	24"	30"	36"	48"	60"	72"	84"	96"	108"	120"	132"	144"
Fabric Insert	$29	32	35	41	48	51	53	59	64	65	71	76

FINISHED DIMENSIONS

Valance Drop Size	3-5/8"
Valance Return Size (Outside Mount)	3-1/2"

Spec:	
Minimum Width	12"
Maximum Width	144"

Inside (IB/IS) Mount	
Valance with no returns	Ordered width - 1/8”
Valance with returns	Ordered width + 1-1/4”
Outside (OB/OS)	
Valance with no returns	Ordered width + 1"
Valance with returns	Ordered width + 2 3/8"
End to End (Net Size) Mount	
Valance with no returns	Ordered width
Valance with returns	Ordered width

FABRIC VALANCE

- Please refer to **Collection Information** section for detail.
- Minimum Width – 12"
- Standard Valance Height – 6"
- Optional Valance Height – 4", 8" & 12"
- One standard return size for Outside Mount – 3 3/4"
- No returns under Inside Mount
- Not all patterns are available. Refer to **Collection Information** section for availability.

Inside Mount

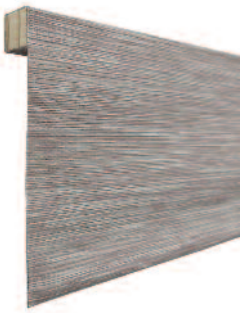

- 3/4" Dust Cap Depth. Mounting depth requirement: 3/4" plus inside mount shade clearance.

Outside Mount with returns

Same specifications as noted to the left

- Outside mount Dust Cap Depth – 3 3/4"
- Outside Mount Fabric Valance (without shades) – finished size measures 1 1/2" wider than ordered width.

Fabric Valance – For valances wider than material width, material will be railroaded. Includes all Roller Shade materials. (Non-railroaded with center seam available upon request.)

WIDTH TO:	24"	30"	36"	48"	60"	72"	84"	96"	108"	120"	132"	144"
IB 4" & 6"	$83	89	98	109	121	141	161	185	205	225	245	265
IB 8" & 12"	91	101	109	143	162	177	201	226	248	274	297	323
OB 4" & 6"	$113	124	134	151	170	185	210	233	257	286	312	340
OB 8" & 12"	126	137	151	172	195	215	243	272	301	337	369	403

DUAL MOUNT SHADE

Brackets
(Part #RC408000 – silver)
(Part #SLB660DBVW – white)
(Part #SLB660DBVBK – black)

Vertical Mount

- Recommended Inside Mount Only
- Approx. 3" minimum mounting depth for flush mount
- 2" minimum mounting depth for Ceiling Mount
- 5-3/4" Bracket height
- Roll Configuration: Reverse (top) / regular (bottom)
  – When combining a Sheer material and a Room Darkening/Blackout, we recommend the Room Darkening/ Blackout as the regular roll on the bottom closest to the window for better light control.
- Available with Clutch Lift, RF R28 RemoteLift, ST-30 Motorized
- Available as side-by-side (butting shades) with pin-end to clutch end
- Fabric Valances are available and create a beautifully finished treatment – see Fabric Valance section for detail
- Cassette, Fascia, Pocket, and Deluxe Valance are not available
- **Maximum size 84" x 96"**

POCKET HEADRAIL, SIDE AND BOTTOM CHANNELS

Pocket Headrail

The aluminum pocket headrail (4-1/8" high x 4-1/2" deep) with closure and end plates conceals and protects the shade mechanism. Available in white and anodized aluminum finishes.

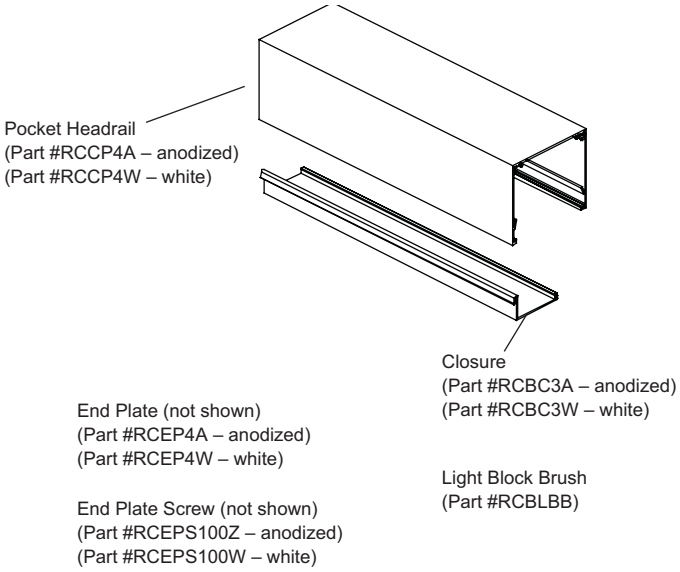

FINISHED DIMENSIONS	
Inside Mount	Ordered Width – 1/8"
Outside Mount	Ordered Width + 1/4"
Exact End to End Mount	Ordered Width

Side and Bottom Channels

Aluminum side and bottom channels prevent light leaks around the edges and bottom of shades. Ideal for room-darkening. Available in white and anodized aluminum finishes. (Side channels feature light-blocking wool pile)

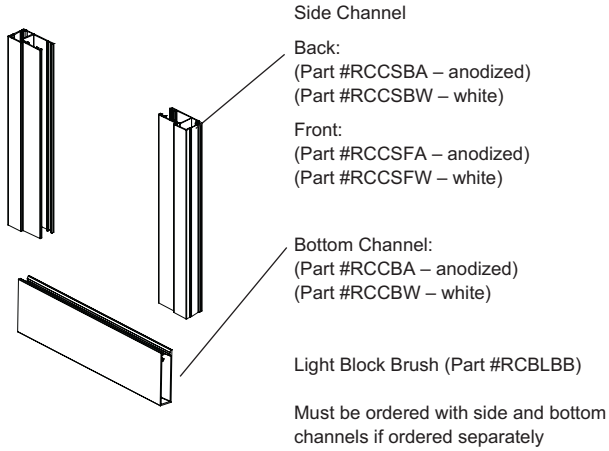

CHANNELS – FLAT SURCHARGES
• Side Channels .....**add $110**
• Bottom Channel.....**add $78**

Note: Side Channels are available with the Pocket Headrail, 4" Fascia, and **R-Series Clutches** only.

Fabric deduction with side channels is 2-3/4" for the headrail cut width.

Pocket Headrail Option Surcharge

WIDTH TO:	24"	30"	36"	48"	60"	72"	84"	96"	108"	120"	132"	144"
	$79	111	130	161	192	224	252	286	317	349	380	411

DECORATIVE PULL TASSELS

Overview
- Optional for TouchLift Cordless shades only.
- Available on fabric-wrapped and Deluxe bottomrails only.
- Available in three styles and multiple color choices.

Style	Color	Color Number
Barrel	Birch	253
	Black	267
	Bone/Ivory	265
	Carob	260
	English Pine	254
	Snowberry	251
	Walnut	266

NOTE: Pull tassel hanging cord are approximate 6" in length measuring from edge of the bottom bar to the lower edge of the tassel.

Ball and Barrel Pull Tassel - specify color .....**add $4**

SPRING ASSIST

Spring Assist <u>Skyline Clutch</u> Control
- Highly recommended for shades between 80" x 80" and 144" x 144"
- Minimum shade size – 44.4 SQ. FT. with shade width greater than 60"
- Geared spring assist clutch system aids in raising heavy shades by reducing the pull force by up to 40%.

SPRING ASSIST UPGRADE SURCHARGE
• Spring Assist Clutch – price shades off Clutch Roller price grid then add surcharge .....**add $105** Note: Spring Assist NOT AVAILABLE with cassettes or 3" Fascia

RAILROADING/MATERIAL SPLICING/SEAM PLACEMENT

Railroaded Material
The fabric is turned on its side, using width for length, to increase the maximum width available. Some fabrics cannot be railroaded due to pattern or construction.

For multiple shade orders, if one shade on the order is railroaded the factory will automatically railroad all other shades. This is done to ensure the pattern direction will be the same on all shades.

Splicing (Seam Placement)
Custom Splicing (Seam Placement) is available with up to 2 seams per shade at a **15% surcharge**. Splice locations are figured from the bottom hem/rail of the shade up. A 1/4" tolerance per seam in either direction is considered acceptable. This is due to the difficulty in handling the material while setting the seam.

The maximum height for custom seams is equal to the material roll width less 3". Example – 98" wide material railroaded and seamed has a maximum seam placement of 95".

Seams may be visible when the shade is fully extended. Seams will be placed as close to the tube as possible, location may varied depending upon roll width and shade height.

Although we maintain the highest quality standards, we cannot guarantee an exact pattern match at the seam on individual shades. We do not guarantee pattern matches shade to shade horizontally or vertically on multiple shade orders.

BOTTOMRAIL OPTIONS

Bottomrail/Hems
Each roller shade fabric comes standard with the fabric-wrapped rail. Alternative bottomrail styles and colors may be selected at no extra charge. Those selections must be noted on your order.

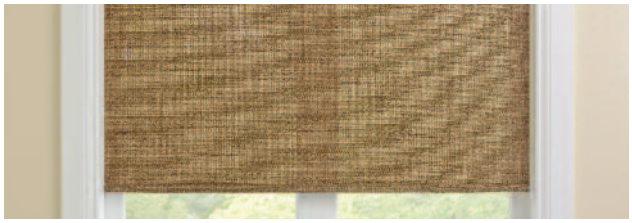

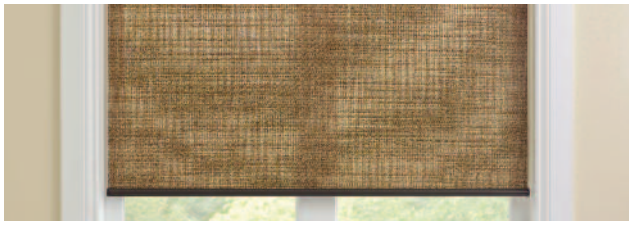

Heat sealed hem bar is highly recommended when shade is ordered with railroaded material or when shade is equal, wider than 108"or longer than 90".

Fabric Wrapped Rail (1")
Front face of rail is wrapped with shade fabric. The back face of the rail is a visible painted finish.
Colors – White, Black

Front face of rail wrapped with shade fabric; back face of rail is a visible painted finish without any fabric wrap.Includes frosted end caps

**Fabric wrapped bottomrail comes with clear handle(s) when ordered as TouchLift Shade. Shades greater than 42" will have 2 handles.

Deluxe Rail (1")
Painted metal rail with color-matched end caps.
Colors – White, Vanilla, Silver, Bronze, and Black

Includes color-matched end caps

Heat Sealed Aluminum Bar (1-1/4")
Aluminum bar heat sealed into a hem pocket. Pocket edges are also sealed. Heat Seal Hem bar is highly recommended on bigger dimension and when shade is request to be made with railroaded material or heavier material to improve appearance of the shades; will help reduce waviness, twisting, cupping & curling.

Not available on all styles. Please refer to the **Collection Information** section.

Heat sealed hem to back pocket edges come sealed

EXTERIOR SHADES

Overview
- Designed to provide added sun blockage and privacy outdoors
- Not intended to serve as a wind block; in windy conditions, shade should be completely rolled up
- Available with clutch control only

Exterior Shade Fabric Selections

Exterior rated materials. Need only an occasional cleaning with mild soap and water

Pattern Name	Fabric Code	Warranty
1% E Screen	R80	5 years
1% Sheerweave 2500	R01	5 years
1% Sheerweave 2701	RS21	5 years
1% Sheerweave 5000	R07	5 years
3% E Screen	R81	5 years
3% M Screen	R58	5 years
3% Sheerweave 2410	R06	5 years
3% Sheerweave 4400	RS2	5 years
3% Sheerweave 5000	R07	5 years
3% T Screen	RS16	5 years
4% S Screen	RS15	5 years
5% E Screen	R51	5 years
5% M Screen Deco	R61	5 years
5% Sheerweave 2390	RS1	5 years
5% Sheerweave 4000	R09	5 years
5% Sheerweave 5000	R10	5 years
7% Sheerweave 5000	R10/R34	5 years
10% E Screen	R19	5 years
10% Sheerweave 5000	R26	5 years

Clutch Lift Continuous Loop Control
- Designed for exterior use
- Constructed of nylon casing and stainless steel interior components for smooth performance and added strength and durability

Stainless Steel Beaded Chain Loop
- Standard length is approximately 2/3 the length of the shade
- Longer lengths available upon request at no additional charge

Bottom Hem – Standard Exterior Shades
- Sealed hem pocket with aluminum bar insert
- Finished with stainless steel grommets to securely anchor the shade (inside diameter – 3/8")

Bottom Bar – Exterior Shades with Cable Guide System
- Round profile aluminum bottom bar
- Cable guide threads through endcaps
- Colors – White, Vanilla, and Bronze

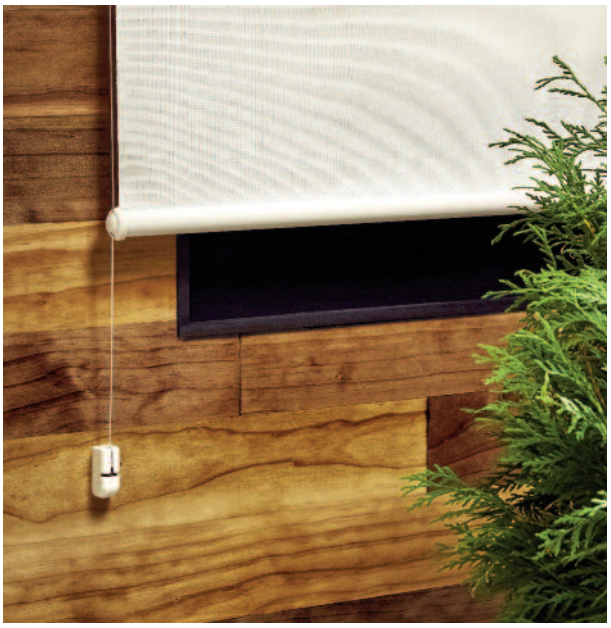

Mounting Brackets
- Dacramet coated rust resistant metal (ASTM rated)

Large Cassette Option – Standard Exterior Shades
- Same large cassette as standard shades
- Available for an added surcharge (refer to grids on price group pages)
- No fabric insert
- Colors – White, Vanilla, Bronze, Silver, and Black

Cassette Option – Exterior Shades with Cable Guide System
- Specially designed large cassette and bracket system
- Available for an added surcharge (refer to **Large Cassette Valance Option Surcharge** on price group pages)
- No fabric insert
- Colors – White, Vanilla, and Bronze

4" Pocket Headrail Option – Standard Exterior Shades
- Available for an added surcharge (refer to **Pocket Headrail, Side and Bottom Channels** section)
- Colors – White, Anodized (not available with cable guide system)

Exterior Shade Surcharge .....**add $34** to the price of the Clutch Roller Shade
Exterior Shade with Cable Guide System Surcharge .....**add $77** to the price of the Clutch Roller Shade
(to add a cassette valance, refer to grid on price group pages)

EXTERIOR SHADES SIZE SPECIFICATIONS

- All Exterior Shades
  Minimum Width: 12"
  Minimum Height: 12"

- Maximum Sizes – Standard Exterior Shades (EXS – Skyline clutch) – refer to the **Product Size Specifications – Clutch Lift section** for detail.

- Maximum Sizes – Exterior Shades with Cable Guide (EXC – R Series clutch) – refer to **With Cable Guide System (Without Cassette)** chart below.

- Maximum Sizes – Exterior Shades with Cable Guide & Cassette (EXCC – R Series clutch) – refer to **With Cable Guide System (Cassette)** chart below.

See Product Component diagrams at the back of the guide.

			With Cable Guide System (Without Cassette) - EXC			
			Non-Railroaded		Railroaded	
Material Name	**FABRIC CODE**	**ROLL WIDTH**	**Maximum Width**	**Maximum Height**	**Maximum Width**	**Maximum Height**
1% E Screen	R80	122"	120"	144"	120"	144"
1% Sheerweave 2500	R01	126"	96"	144"	96"	144"
1% Sheerweave 2701	RS21	126"	96"	144"	96"	144"
1% Sheerweave 5000	R07	98"	96"	144"	N/A	N/A
3% E Screen	R81	122"	120"	144"	120"	144"
3% M Screen	R58	122"	120"	144"	120"	144"
3% Sheerweave 2410	R06	126"	96"	144"	96"	144"
3% Sheerweave 4400	RS2	126"	96"	144"	96"	144"
3% Sheerweave 5000	R07	98"	96"	144"	N/A	N/A
3% T Screen	RS16	98"	98"	144"	120"	144"
4% S Screen	RS15	122"	96"	144"	N/A	N/A
5% E Screen	R51	122"	120"	144"	120"	144"
5% M Screen Deco	R61	98"	98"	144"	120"	144"
5% Sheerweave 2390	RS1	126"	120"	144"	120"	144"
5% Sheerweave 4000	R09	126"	96"	144"	96"	144"
5% Sheerweave 5000	R10	98"	96"	144"	N/A	N/A
7% Sheerweave 5000	R10/R34	98"	96"	144"	N/A	N/A
10% E Screen	R19	122"	120"	144"	120"	144"
10% Sheerweave 5000	R26	98"	96"	144"	N/A	N/A

			With Cable Guide System (with Cassette) - EXCC			
			Non-Railroaded		Railroaded	
Material Name	**FABRIC CODE**	**ROLL WIDTH**	**Maximum Width**	**Maximum Height**	**Maximum Width**	**Maximum Height**
1% E Screen	R80	122"	120"	144"	120"	144"
1% Sheerweave 2500	R01	126"	96"	120"	96"	120"
1% Sheerweave 2701	RS21	126"	96"	144"	96"	144"
1% Sheerweave 5000	R07	98"	98"	78"	N/A	N/A
3% E Screen	R81	122"	120"	144"	120"	144"
3% M Screen	R58	122"	120"	144"	120"	144"
3% Sheerweave 2410	R06	126"	96"	144"	96"	144"
3% Sheerweave 4400	RS2	126"	96"	133"	96"	133"
3% Sheerweave 5000	R07	98"	98"	78"	N/A	N/A
3% T Screen	RS16	98"	98"	120"	120"	120"
4% S Screen	RS15	122"	96"	80"	N/A	N/A
5% E Screen	R51	122"	120"	144"	120"	144"
5% M Screen Deco	R61	98"	98"	120"	120"	120"
5% Sheerweave 2390	RS1	126"	120"	144"	120"	144"
5% Sheerweave 4000	R09	126"	96"	100"	96"	100"
5% Sheerweave 5000	R10	98"	98"	78"	N/A	N/A
7% Sheerweave 5000	R10/R34	98"	98"	78"	N/A	N/A
10% E Screen	R19	122"	120"	144"	120"	144"
10% Sheerweave 5000	R26	98"	98"	78"	N/A	N/A

ORDERING NOTES

When ordering, please be sure to specify **DIRECTION OF ROLL**.

- Direction of Roll:
- Extended Projection Bracket (not available with Cassette Valance, Fascia, or Pocket Headrail options)

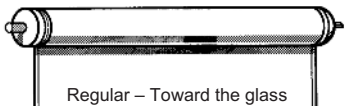

Regular – Toward the glass

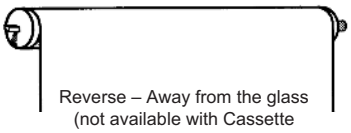

Reverse – Away from the glass (not available with Cassette Valance, Fascias or Pocket Headrail)

2-ON-1 OPTIONS – SPECIFY ON ORDER

- 2-on-1 headrail is only available with the Cassette Valance option for CLUTCH Beaded Chain roller shades or RemoteLift motorized shades.
- Price as 2 separate shades and add together. Refer to product specification chart for size limits (based on individual shades)

FEATURES AND OPTIONS

FEATURES AND OPTIONS	
Operating Systems	Clutch, TouchLift Cordless, and Motorization
Clutch - Beaded Chain System	Skyline (standard) R Series (optional)
Plastic Bead Chain	White, Black (standard), Vanilla, Bronze (optional)
Metal Bead Chain** (Optional)	Antique Brass, Oil Rubbed Bronze, Stainless Steel, Nickel, Black and White
TouchLift Cordless	Yes - available in White & Black Bar/Rail
PowerWand™	Yes - available in 1 ft, 2ft, 3ft, 4ft & 5 ft in White or Black
Motorized Roller System	Yes - Radio Frequency (RF) - Simplicity Motorization and RemoteLift
Hardwired Motorization	Yes - ST30, ST50, and ST50R
Cassette Valance Styles/Sizes	Small = 2-1/2" x 2-1/2", Medium = 3-1/8" x 3-3/4", Large = 3-7/8" x 3-7/8"
Cassette Valance Colors	White, Vanilla, Silver, Bronze & Black (Silver available in medium & large cassette only)
Fascias	Yes - 3" and 4" Profiles
Fascia Colors	White, Vanilla, Silver, Bronze, Black
Deluxe Valance	Yes - available in most fabrics
Fabric Valance	Yes - available in most fabrics
Pocket Headrail - Colors	Yes - 4" Profile - White and Anodized Aluminum
Side and Bottom Channels	Yes - White and Anodized Aluminum (side channels feature light-blocking wool pile)
Two-on-One Shade Option	Yes - Clutch or RemoteLift with Cassette Valance ONLY *
Exterior Shades	Yes - select patterns
Bottomrail Options	Yes - Fabric Wrapped (standard), Deluxe, or Heat-Sealed Aluminum Bar **
Bottomrail Colors	Fabric Wrapped - White or Black; Deluxe - White, Vanilla, Silver, Bronze, or Black
Decorative Shade Pulls	Yes - TouchLift Cordless System Only
Control Positions	R or L - Beaded Chain Clutch System Only
Extension Brackets	No - not available
Hold-Down Brackets	Yes - Fabric-Wrapped and Deluxe Bottomrails Only
Spacer Block	Yes - available with Standard Clutch, TouchLift, Outside Mount (OB) Deluxe Valance, Small/Medium/Large Cassette
Railroad Material Option	Yes - available in most fabrics
Seam/Splicing Fabric	Yes - available in most fabrics
Reverse Roll Option	Yes - not available with Cassette Valance, Fascia, or Pocket Headrail options
Custom Cord Length	Yes - Beaded Chain Clutch System Only
Warranty	Limited Lifetime (5 years for motorization)

* Note: **2 on 1 Headrail Shades** must be ordered as either **Clutch-Beaded Chain** or **RemoteLift** and with the **Cassette Valance** option.

2 on 1 Headrail with RemoteLift must be ordered with **multi-channel remote control** to allow for independent shade operation.

** Highly recommended for shade size equal, wider or longer than 108" x 90", especially on shades with railroaded material. Heat sealed aluminum bar is **REQUIRED** on Avila R Blackout, Linview Blackout, and Scala Blackout)

PRODUCT NOTES

- **Tip to Tip Facts:**
  - On an outside mount Beaded Chain Roller, the material will cover 1" less than the tip to tip width.
  - See Finished Dimension charts for additional information

- **Additional Notes:**
  - Minor telescoping of product is possible if shade is not installed exactly level and is considered acceptable.
  - On orders with multiple shades, if one shade requires railroading, we will railroad all shades for a consistent look.
  - To assure color consistency and avoid dye lot variation, please order all shades at the same time. The availability of colors is subject to change without notice.

- **To Straighten Shade:**
  If your shade does not roll straight, correct as follows:
  Figure A - Shade veers toward right, or left. Correct by lowering shade completely exposing the roller tube and wrapping a 1-1/2" long piece of masking tape, as shown in Figure B, on the shorter side (opposite of where it's veering). This increases the diameter of the roller slightly, acting as a straightener. Then raise and lower the shade.

If shade does not still roll straight, add a second layer of tape and repeat process. Continue to add tape until shade rolls straight.

FIGURE A

FIGURE B

FLAME-RETARDANT FABRICS

The following patterns are flame retardant and suitable for many commercial applictions. They will pass the following F.R. tests:

Material Name	CCC-C-521E	NFPA #101 and/or #701	FTM 191A #5903
1% E Screen		✷	
1% Sheerweave 2500		✷	
1% Sheerweave 2701		✷	
1% Sheerweave 5000		✷	
1% Toka		✷	
3% E Screen		✷	
3% M Screen		✷	
3% Sheerweave 2410		✷	
3% Sheerweave 4400		✷	
3% Sheerweave 5000		✷	
3% T Screen		✷	
4% S Screen		✷	
4% Silver Screen		✷	
5% E Screen		✷	
5% M Screen Deco		✷	
5% Sheerweave 2390		✷	
5% Sheerweave 4000		✷	
5% Sheerweave 5000		✷	
7% Global Screen		✷	
7% Sheerweave 5000		✷	
10% E Screen		✷	
10% Sheerweave 5000		✷	
Blackout - Solid	✷	✷	✷
Flocke Blackout		✷	
Sunscreen 7000		✷	

** **Avila R Blackout** is classified under ASTM E84 (Class B), fire rated for residential applications only.

PRODUCT SIZE SPECIFICATIONS – CLUTCH LIFT

Minimum and Maximum Standards
For shades 12" wide, maximum length is 60"
All Patterns – Minimum Width: 12" Minimum Height: 12".
Spring Assist strongly recommended on shade sizes over 80" x 80".
For TouchLift Cordless specifications, please refer to Product Specifications – Touch Lift section.

Please Note: Shade sizes that are wider than the fabric roll width indicated will be made with the fabric turned width for length (railroaded). The maximum width for non-railroaded shades is the roll width unless otherwise noted.

Fabrics turned width for length will have a visible seam when fabricated longer than their maximum roll width less 10". Fabrics turned width for length may have an edge curl. This is not considered a defect in the product.

Material Name	Roll Width	Railroad Option	Splice/ Seam		Standard Clutch	Fabric Valance	Deluxe Valance	Small Cassette	Medium Cassette	Large Cassette	3" Fascia	4" Fascia	Pocket Headrail	Spring Assist Clutch Standard Shade	Spring Assist Clutch 4" Fascia	Spring Assist Clutch Pocket
1% E Screen	122"	YES	YES	**Non-Railroaded**												
				Maximum Width	122"**	102"	102"	72"	102"	102"	102"	122"**	122"**	122"**	122"**	122"**
				**R Series clutch - max width - 120"	Maximum Height									Maximum Height		
				For Shade Widths to 84"	144"	144"	144"	74"*	138"	144"	144"	144"	144"	144"	144"	144"
				For Shade Widths to 90"	144"	138"	138"	NA	138"	138"	138"	144"	144"	144"	144"	144"
				For Shade Widths to 96"	144"	108"	108"	NA	108"	108"	108"	144"	144"	144"	144"	144"
				For Shade Widths over 96"	144"	84"	84"	NA	84"	84"	84"	144"	144"	144"	144"	144"
					*Small cassette - max shade size is 72" x 74"											
				Railroaded												
				Maximum Width	144"**	102"	102"	72"	102"	102"	102"	144"**	144"**	144"**	144"**	144"**
				**R Series clutch - max width - 120"	Maximum Height									Maximum Height		
				For Shade Widths to 84"	144"	144"	144"	74"*	138"	144"	144"	144"	144"	144"	144"	144"
				For Shade Widths to 90"	144"	138"	138"	NA	138"	138"	138"	144"	144"	144"	144"	144"
				For Shade Widths to 96"	144"	108"	108"	NA	108"	108"	108"	144"	144"	144"	144"	144"
				For Shade Widths to 102"	144"	84"	84"	NA	84"	84"	84"	144"	144"	144"	144"	144"
				For Shade Widths over 102"	144"	NA	NA	NA	NA	NA	NA	144"	144"	144"	144"	144"
					*Small cassette - max shade size is 72" x 74"											
1% Sheerweave 2500	126"	YES	YES	**Non-Railroaded**												
				Maximum Width	126"**	102"**	102"**	65"	102"**	102"**	102"**	126"**	126"**	126"**	126"**	126"**
				**R Series clutch - max width - 96"	Maximum Height											
				For Shade Widths to 78"	144"	144"	144"	60"*	114"	144"	144"	144"	144"	NA	NA	NA
				For Shade Widths to 84"	144"	126"	126"	NA	114"	126"	126"	144"	144"	144"	144"	114"
				For Shade Widths to 90"	144"	114"	114"	NA	96"	114"	96"	144"	144"	144"	144"	114"
				For Shade Widths to 96"	144"	114"	114"	NA	78"	114"	90"	144"	144"	144"	144"	114"
				For Shade Widths to 102"	144"	60"	60"	NA	60"	60"	60"	144"	144"	144"	144"	114"
				For Shade Width over 102"	144"	NA	NA	NA	NA	NA	NA	144"	114"	144"	144"	114"
					*Small cassette - max shade size is 65" x 60"											
				Railroaded												
				Maximum Width	144"**	102"**	102"**	65"	102"**	102"**	102"**	144"**	144"**	144"**	144"**	144"**
				**R Series clutch - max width - 96"	Maximum Height									Maximum Height		
				For Shade Widths to 78"	144"	144"	144"	60"*	114"	144"	144"	144"	144"	NA	NA	NA
				For Shade Widths to 84"	144"	126"	126"	NA	114"	126"	126"	144"	144"	144"	144"	114"
				For Shade Widths to 90"	144"	114"	114"	NA	96"	114"	96"	144"	144"	144"	144"	114"
				For Shade Widths to 96"	144"	114"	114"	NA	78"	114"	90"	144"	144"	144"	144"	114"
				For Shade Widths to 102"	144"	60"	60"	NA	60"	60"	60"	144"	144"	144"	144"	114"
				For Shade Widths to 108"	144"	NA	NA	NA	NA	NA	NA	144"	144"	144"	144"	114"
				For Shade Widths over 108"	144"	NA	NA	NA	NA	NA	NA	144"	114"	144"	144"	114"
					*Small cassette - max shade size is 65" x 60"											
1% Sheerweave 2701	126"	YES	YES	**Non-Railroaded**												
				Maximum Width	126"**	108"**	108"**	84"	108"**	108"**	108"**	126"**	126"**	126"**	126"**	126"**
				**R Series clutch - max width - 96"	Maximum Height									Maximum Height		
				For Shade Widths to 72"	144"	144"	144"	72"	138"	144"	144"	144"	144"	NA	NA	NA
				For Shade Widths to 84"	144"	144"	144"	42"	126"	144"	126"	144"	144"	144"	144"	144"
				For Shade Widths to 90"	144"	144"	144"	NA	96"	144"	114"	144"	144"	144"	144"	144"
				For Shade Widths to 96"	144"	144"	144"	NA	78"	144"	114"	144"	144"	144"	144"	144"
				For Shade Widths to 102"	144"	60"	60"	NA	60"	60"	60"	144"	144"	144"	144"	144"
				For Shade Widths over 102"	144"	48"	48"	NA	48"	48"	48"	144"	144"	144"	144"	144"
				Railroaded												
				Maximum Width	144"**	108"**	108"**	84"	108"**	108"**	108"**	144"**	144"**	144"**	144"**	144"**
				**R Series clutch - max width - 96"	Maximum Height									Maximum Height		
				For Shade Widths to 72"	144"	144"	144"	72"	138"	144"	144"	144"	144"	NA	NA	NA
				For Shade Widths to 84"	144"	144"	144"	42"	126"	144"	126"	144"	144"	144"	144"	144"
				For Shade Widths to 90"	144"	144"	144"	NA	96"	144"	114"	144"	144"	144"	144"	144"
				For Shade Widths to 96"	144"	144"	144"	NA	78"	144"	114"	144"	144"	144"	144"	144"
				For Shade Widths to 102"	144"	60"	60"	NA	60"	60"	60"	144"	144"	144"	144"	144"
				For Shade Widths to 126"	144"	48"	48"	NA	48"	48"	48"	144"	144"	144"	144"	144"
				For Shade Widths over 126"	144"	NA	NA	NA	NA	NA	NA	144"	144"	144"	144"	144"
1% Sheerweave 5000	98"	NO	NO	**Non-Railroaded**												
				Maximum Width	98"**	90"	90"	NA	96"	96"	96"	98"**	98"**	98"**	98"**	98"**
				**R Series clutch - max width - 96"	Maximum Height									Maximum Height		
				For Shade Widths to 60"	144"	102"	102"	NA	66"	102"	102"	120"	120"	NA	NA	NA
				For Shade Widths over 60"	144"	78"	78"	NA	54"	78"	78"	120"	90"	144"	90"	90"

PRODUCT SIZE SPECIFICATIONS – CLUTCH LIFT

Minimum and Maximum Standards
For shades 12" wide, maximum length is 60"
All Patterns – Minimum Width: 12" Minimum Height: 12".
Spring Assist strongly recommended on shade sizes over 80" x 80".
For TouchLift Cordless specifications, please refer to Product Specifications – Touch Lift section.

Please Note: Shade sizes that are wider than the fabric roll width indicated will be made with the fabric turned width for length (railroaded). The maximum width for non-railroaded shades is the roll width unless otherwise noted.

Fabrics turned width for length will have a visible seam when fabricated longer than their maximum roll width less 10". Fabrics turned width for length may have an edge curl. This is not considered a defect in the product.

Material Name	Roll Width	Railroad Option	Splice/ Seam
1% Toka	118"	YES	YES

Non-Railroaded

Maximum Width	Standard Clutch	Fabric Valance	Deluxe Valance	Small Cassette	Medium Cassette	Large Cassette	3" Fascia	4" Fascia	Pocket Headrail	Spring Assist Clutch: Standard Shade	Spring Assist Clutch: 4" Fascia	Spring Assist Clutch: Pocket
	118"**	108"**	108"**	84"	108"**	108"**	108"**	118"**	118"**	118"**	118"**	118"**
**R Series clutch - max width - 96"	Maximum Height									Maximum Height		
For Shade Widths to 66"	144"	144"	144"	48"	114"	144"	132"	144"	144"	NA	NA	NA
For Shade Widths to 72"	144"	144"	144"	48"	96"	144"	132"	144"	144"	NA	NA	NA
For Shade Widths to 84"	144"	126"	126"	42"	96"	126"	126"	144"	144"	144"	144"	102"
For Shade Widths to 90"	144"	102"	102"	NA	96"	102"	96"	144"	144"	144"	144"	102"
For Shade Widths to 96"	144"	102"	102"	NA	78"	102"	82"	144"	144"	144"	144"	102"
For Shade Widths to 102"	144"	60"	60"	NA	60"	60"	60"	144"	144"	144"	144"	102"
For Shade Widths over 102"	144"	48"	48"	NA	48"	48"	48"	144"	114"	144"	144"	102"

Railroaded

	144"**	108"**	108"**	84"	108"**	108"**	108"**	144"**	144"**	144"**	144"**	144"**
**R Series clutch - max width -96 "	Maximum Height									Maximum Height		
For Shade Widths to 66"	144"	144"	144"	48"	114"	144"	132"	144"	144"	NA	NA	NA
For Shade Widths to 72"	144"	144"	144"	48"	96"	144"	132"	144"	144"	NA	NA	NA
For Shade Widths to 84"	144"	126"	126"	42"	96"	126"	126"	144"	144"	144"	144"	102"
For Shade Widths to 90"	144"	102"	102"	NA	96"	102"	96"	144"	144"	144"	144"	102"
For Shade Widths to 96"	144"	102"	102"	NA	78"	102"	82"	144"	144"	144"	144"	102"
For Shade Widths to 102"	144"	60"	60"	NA	60"	60"	60"	144"	144"	144"	144"	102"
For Shade Widths to 108"	144"	48"	48"	NA	48"	48"	48"	144"	144"	144"	144"	102"
For Shade Widths over 108"	144"	NA	NA	NA	NA	NA	NA	144"	114"	144"	144"	102"

Material Name	Roll Width	Railroad Option	Splice/ Seam
3% E Screen	122"	YES	YES

Non-Railroaded

Maximum Width	122"**	110"	110"	72"	102"	120"	120"	122"**	122"**	122"**	122"**	122"**
**R Series clutch - max width - 120"	Maximum Height									Maximum Height		
For Shade Widths to 84"	144"	144"	144"	84"*	144"	144"	144"	144"	144"	144"	144"	144"
For Shade Widths to 90"	144"	144"	144"	NA	138"	144"	144"	144"	144"	144"	144"	144"
For Shade Widths to 96"	144"	144"	144"	NA	108"	144"	144"	144"	144"	144"	144"	144"
For Shade Widths over 96"	144"	144"	144"	NA	84"	144"	144"	144"	144"	144"	144"	144"

*Small cassette - max shade size is 72" x 84"

Railroaded

Maximum Width	144"**	110"	110"	72"	102"	120"	120"	144"**	144"**	144"**	144"**	144"**
**R Series clutch - max width - 120"	Maximum Height									Maximum Height		
For Shade Widths to 84"	144"	144"	144"	84"*	144"	144"	144"	144"	144"	144"	144"	144"
For Shade Widths to 90"	144"	144"	144"	NA	138"	144"	144"	144"	144"	144"	144"	144"
For Shade Widths to 96"	144"	144"	144"	NA	108"	144"	144"	144"	144"	144"	144"	144"
For Shade Widths to 102"	144"	144"	144"	NA	84"	144"	144"	144"	144"	144"	144"	144"
For Shade Widths to 110"	144"	144"	144"	NA	NA	144"	144"	144"	144"	144"	144"	144"
For Shade Widths to 120"	144"	NA	NA	NA	NA	144"	144"	144"	144"	144"	144"	144"
For Shade Widths over 120"	144"	NA	NA	NA	NA	NA	NA	144"	144"	144"	144"	144"

*Small cassette - max shade width is 72"

Material Name	Roll Width	Railroad Option	Splice/ Seam
3% M Screen	122"	YES	YES

Non-Railroaded

Maximum Width	122"**	112"	112"	84"	108"	120"	120"	122"**	122"**	122"**	122"**	122"**
**R Series clutch - max width - 120"	Maximum Height									Maximum Height		
For Shade Widths to 78"	144"	144"	144"	75"	144"	144"	144"	144"	144"	NA	NA	NA
For Shade Widths to 84"	144"	144"	144"	60"	144"	144"	144"	144"	144"	144"	144"	144"
For Shade Widths to 90"	144"	144"	144"	NA	138"	144"	138"	144"	144"	144"	144"	144"
For Shade Widths over 90"	144"	144"	144"	NA	66"	144"	120"	144"	144"	144"	144"	144"

Railroaded

Maximum Width	144"**	120"	120"	84"	108"	120"	120"	144"**	144"**	144"**	144"**	144"**
**R Series clutch - max width - 120"	Maximum Height									Maximum Height		
For Shade Widths to 78"	144"	144"	144"	75"	144"	144"	144"	144"	144"	NA	NA	NA
For Shade Widths to 84"	144"	144"	144"	60"	144"	144"	144"	144"	144"	144"	144"	144"
For Shade Widths to 90"	144"	144"	144"	NA	138"	144"	138"	144"	144"	144"	144"	144"
For Shade Widths to 108"	144"	144"	144"	NA	66"	144"	118"	144"	144"	144"	144"	144"
For Shade Widths to 120"	144"	144"	144"	NA	NA	144"	118"	144"	144"	144"	144"	144"
For Shade Widths over 120"	144"	NA	NA	NA	NA	NA	NA	144"	144"	144"	144"	144"

PRODUCT SIZE SPECIFICATIONS – CLUTCH LIFT

Minimum and Maximum Standards
For shades 12" wide, maximum length is 60"
All Patterns – Minimum Width: 12" Minimum Height: 12".
Spring Assist strongly recommended on shade sizes over 80" x 80".
For TouchLift Cordless specifications, please refer to Product Specifications – Touch Lift section.

Please Note: Shade sizes that are wider than the fabric roll width indicated will be made with the fabric turned width for length (railroaded). The maximum width for non-railroaded shades is the roll width unless otherwise noted.

Fabrics turned width for length will have a visible seam when fabricated longer than their maximum roll width less 10". Fabrics turned width for length may have an edge curl. This is not considered a defect in the product.

Material Name	Roll Width	Railroad Option	Splice/ Seam		Standard Clutch	Fabric Valance	Deluxe Valance	Small Cassette	Medium Cassette	Large Cassette	3" Fascia	4" Fascia	Pocket Headrail	Spring Assist Clutch Standard Shade	Spring Assist Clutch 4" Fascia	Spring Assist Clutch Pocket
3% Sheerweave 2410	126"	YES	YES	**Non-Railroaded**												
				Maximum Width	126"**	102"**	102"**	78"	96"	102"**	102"**	126"**	126"**	126"**	126"**	126"**
				Maximum Height												
				For Shade Widths to 78"	144"	144"	144"	60"	144"	144"	144"	144"	144"	NA	NA	NA
				For Shade Widths to 84"	144"	144"	144"	NA	126"	144"	126"	144"	144"	144"	144"	144"
				For Shade Widths to 90"	144"	144"	144"	NA	96"	144"	120"	144"	144"	144"	144"	144"
				For Shade Widths to 96"	144"	144"	144"	NA	78"	144"	120"	144"	144"	144"	144"	144"
				For Shade Widths over 96"	144"	60"	60"	NA	NA	60"	60"	144"	144"	144"	144"	144"
				Railroaded												
				Maximum Width	144"**	102"**	102"**	78"	96"	102"**	102"**	144"**	144"**	144"**	144"**	144"**
				Maximum Height												
				For Shade Widths to 78"	144"	144"	144"	60"	144"	144"	144"	144"	144"	NA	NA	NA
				For Shade Widths to 84"	144"	144"	144"	NA	126"	144"	126"	144"	144"	144"	144"	144"
				For Shade Widths to 90"	144"	144"	144"	NA	96"	144"	120"	144"	144"	144"	144"	144"
				For Shade Widths to 96"	144"	144"	144"	NA	78"	144"	120"	144"	144"	144"	144"	144"
				For Shade Widths to 102"	144"	60"	60"	NA	NA	60"	60"	144"	144"	144"	144"	144"
				For Shade Widths over 102"	144"	NA	NA	NA	NA	NA	NA	144"	144"	144"	144"	144"
3% Sheerweave 4400	126"	YES	YES	**Non-Railroaded**												
				Maximum Width	124"**	108"**	108"**	84"	108"**	108"**	108"**	124"**	124"**	124"**	124"**	124"**
				Maximum Height												
				For Shade Widths to 66"	144"	126"	126"	40"	100"	126"	114"	144"	144"	NA	NA	NA
				For Shade Widths to 72"	144"	126"	126"	40"	84"	126"	108"	144"	144"	NA	NA	NA
				For Shade Widths to 84"	144"	126"	126"	40"	78"	126"	108"	144"	132"	144"	144"	80"
				For Shade Widths to 90"	144"	96"	96"	NA	78"	96"	96"	144"	132"	144"	144"	80"
				For Shade Widths to 96"	144"	78"	78"	NA	78"	78"	78"	144"	132"	144"	144"	80"
				For Shade Widths to 102"	144"	60"	60"	NA	60"	60"	60"	144"	132"	144"	144"	80"
				For Shade Widths over 102"	144"	48"	48"	NA	48"	48"	48"	144"	90"	144"	144"	80"
				Railroaded												
				Maximum Width	144"**	108"**	108"**	84"	108"**	108"**	108"**	144"**	144"**	144"**	144"**	144"**
				Maximum Height												
				For Shade Widths to 66"	144"	126"	126"	40"	100"	126"	114"	144"	144"	NA	NA	NA
				For Shade Widths to 72"	144"	126"	126"	40"	84"	126"	108"	144"	144"	NA	NA	NA
				For Shade Widths to 84"	144"	126"	126"	40"	78"	126"	108"	144"	132"	144"	144"	80"
				For Shade Widths to 90"	144"	96"	96"	NA	78"	96"	96"	144"	132"	144"	144"	80"
				For Shade Widths to 96"	144"	78"	78"	NA	78"	78"	78"	144"	132"	144"	144"	80"
				For Shade Widths to 102"	144"	60"	60"	NA	60"	60"	60"	144"	132"	144"	144"	80"
				For Shade Widths to 108"	144"	48"	48"	NA	48"	48"	48"	144"	132"	144"	144"	80"
				For Shade Widths over 108"	144"	NA	NA	NA	NA	NA	NA	144"	78"	144"	144"	78"
3% Sheerweave 5000	98"	NO	NO	**Non-Railroaded**												
				Maximum Width	98"**	90"	90"	NA	84"	96"	96"	98"**	98"**	98"**	98"**	98"**
				Maximum Height												
				For Shade Widths to 60"	144"	90"	90"	NA	60"	90"	90"	120"	102"	NA	NA	NA
				For Shade Widths over 60"	144"	72"	72"	NA	42"	72"	60"	120"	78"	144"	90"	42"
3% T Screen	98"	YES	YES	**Non-Railroaded**												
				Maximum Width	98"	90"	90"	84"	96"	96"	96"	98"	98"	98"	98"	98"
				Maximum Height												
				For Shade Widths to 84"	144"	144"	144"	54"	114"	144"	144"	144"	144"	144"	144"	114"
				For Shade Widths to 90"	144"	138"	138"	NA	114"	138"	138"	144"	144"	144"	144"	114"
				For Shade Widths over 90"	144"	NA	NA	NA	108"	108"	108"	144"	144"	144"	144"	114"
				Railroaded												
				Maximum Width	120"	108"	108"	84"	108"	108"	108"	120"	120"	120"	120"	120"
				Maximum Height												
				For Shade Widths to 84"	144"	144"	144"	54"	114"	144"	144"	144"	144"	144"	144"	114"
				For Shade Widths to 90"	144"	138"	138"	NA	114"	138"	138"	144"	144"	144"	144"	114"
				For Shade Widths to 98"	144"	108"	108"	NA	108"	108"	108"	144"	144"	144"	144"	114"
				For Shade Widths over 98"	120"	66"	66"	NA	66"	66"	66"	120"	120"	120"	120"	114"
4% S Screen	122"	NO	NO	**Non-Railroaded**												
				Maximum Width	122"**	108"**	108"**	84"	108"**	108"**	108"**	122"**	122"**	122"**	122"**	122"**
				Maximum Height												
				For Shade Widths to 66"	144"	120"	120"	40"	96"	120"	114"	144"	144"	NA	NA	NA
				For Shade Widths to 72"	144"	120"	120"	40"	84"	120"	102"	144"	144"	NA	NA	NA
				For Shade Widths to 84"	144"	120"	120"	40"	72"	120"	102"	144"	126"	144"	144"	80"
				For Shade Widths to 90"	144"	96"	96"	NA	72"	96"	96"	144"	126"	144"	144"	80"
				For Shade Widths to 96"	144"	78"	78"	NA	72"	78"	78"	144"	126"	144"	144"	80"
				For Shade Widths to 102"	144"	60"	60"	NA	60"	60"	60"	144"	126"	144"	144"	80"
				For Shade Widths over 102"	144"	48"	48"	NA	48"	48"	48"	144"	90"	144"	144"	80"

PRODUCT SIZE SPECIFICATIONS – CLUTCH LIFT

Minimum and Maximum Standards
For shades 12" wide, maximum length is 60"
All Patterns – Minimum Width: 12" Minimum Height: 12".
Spring Assist strongly recommended on shade sizes over 80" x 80".
For TouchLift Cordless specifications, please refer to Product Specifications – Touch Lift section.

Please Note: Shade sizes that are wider than the fabric roll width indicated will be made with the fabric turned width for length (railroaded). The maximum width for non-railroaded shades is the roll width unless otherwise noted.

Fabrics turned width for length will have a visible seam when fabricated longer than their maximum roll width less 10". Fabrics turned width for length may have an edge curl. This is not considered a defect in the product.

Material Name	Roll Width	Railroad Option	Splice/ Seam		Standard Clutch	Fabric Valance	Deluxe Valance	Small Cassette	Medium Cassette	Large Cassette	3" Fascia	4" Fascia	Pocket Headrail	Spring Assist Clutch		
														Standard Shade	4" Fascia	Pocket
4% Silver Screen	94"	YES	YES	**Non-Railroaded**												
				Maximum Width	94"	84"	84"	90"	94"	94"	94"	94"	94"	94"	94"	94"
					Maximum Height									Maximum Height		
				For Shade Widths to 78"	144"	144"	144"	78"	144"	144"	144"	144"	144"	NA	NA	NA
				For Shade Widths to 84"	144"	144"	144"	60"	144"	144"	144"	144"	144"	144"	144"	144"
				For Shade Widths to 90"	144"	NA	NA	42"	138"	144"	138"	144"	144"	144"	144"	144"
				For Shade Widths over 90"	144"	NA	NA	NA	108"	144"	132"	144"	144"	144"	144"	144"
				Railroaded												
				Maximum Width	144"**	120"	120"	90"	120"	120"	120"	144"**	144"**	144"**	144"**	144"**
				**R Series clutch - max width - 120"	Maximum Height									Maximum Height		
				For Shade Widths to 78"	144"	144"	144"	78"	144"	144"	144"	144"	144"	NA	NA	NA
				For Shade Widths to 84"	144"	144"	144"	60"	144"	144"	144"	144"	144"	144"	144"	144"
				For Shade Widths to 90"	144"	144"	144"	42"	138"	144"	138"	144"	144"	144"	144"	144"
				For Shade Widths to 94"	144"	144"	144"	NA	108"	144"	132"	144"	144"	144"	144"	144"
				For Shade Widths over 94"	144"	144"	144"	NA	72"	144"	132"	144"	144"	144"	144"	144"
5% E Screen	122"	YES	YES	**Non-Railroaded**												
				Maximum Width	122"**	112"	112"	90"	120"	120"	120"	122"**	122"**	122"**	122"**	122"**
				**R Series clutch - max width - 120"	Maximum Height									Maximum Height		
				For Shade Widths to 72"	144"	144"	144"	90"	144"	144"	144"	144"	144"	NA	NA	NA
				For Shade Widths to 78"	144"	144"	144"	84"	144"	144"	144"	144"	144"	NA	NA	NA
				For Shade Widths to 84"	144"	144"	144"	60"	144"	144"	144"	144"	144"	144"	144"	144"
				For Shade Widths to 90"	144"	144"	144"	42"	138"	144"	144"	144"	144"	144"	144"	144"
				For Shade Widths over 90"	144"	144"	144"	NA	84"	144"	144"	144"	144"	144"	144"	144"
				Railroaded												
				Maximum Width	144"**	120"	120"	90"	120"	120"	120"	144"**	144"**	144"**	144"**	144"**
				**R Series clutch - max width - 120"	Maximum Height									Maximum Height		
				For Shade Widths to 72"	144"	144"	144"	90"	144"	144"	144"	144"	144"	NA	NA	NA
				For Shade Widths to 78"	144"	144"	144"	84"	144"	144"	144"	144"	144"	NA	NA	NA
				For Shade Widths to 84"	144"	144"	144"	60"	144"	144"	144"	144"	144"	144"	144"	144"
				For Shade Widths to 90"	144"	144"	144"	42"	138"	144"	144"	144"	144"	144"	144"	144"
				For Shade Widths to 120"	144"	144"	144"	NA	84"	144"	144"	144"	144"	144"	144"	144"
				For Shade Widths over 120"	144"	NA	NA	NA	NA	NA	NA	144"	144"	144"	144"	144"
5% M Screen Deco	98"	YES	YES	**Non-Railroaded**												
				Maximum Width	98"	90"	90"	90"	98"	98"	98"	98"	98"	98"	98"	98"
					Maximum Height									Maximum Height		
				For Shade Widths to 78"	144"	144"	144"	60"	120"	144"	144"	144"	144"	NA	NA	NA
				For Shade Widths to 84"	144"	144"	144"	60"	120"	144"	144"	144"	144"	144"	144"	130"
				For Shade Widths to 90"	144"	138"	138"	48"	120"	138"	138"	144"	144"	144"	144"	130"
				For Shade Widths over 90"	144"	NA	NA	NA	84"	126"	102"	144"	144"	144"	144"	130"
				Railroaded												
				Maximum Width	144"**	120"	120"	90"	120"	120"	120"	144"**	144"**	144"**	144"**	144"**
				**R Series clutch - max width - 120"	Maximum Height									Maximum Height		
				For Shade Widths to 78"	144"	144"	144"	60"	120"	144"	144"	144"	144"	NA	NA	NA
				For Shade Widths to 84"	144"	144"	144"	60"	120"	144"	144"	144"	144"	144"	144"	130"
				For Shade Widths to 90"	144"	138"	138"	48"	120"	138"	138"	144"	144"	144"	144"	130"
				For Shade Widths to 98"	144"	126"	126"	NA	84"	126"	102"	144"	144"	144"	144"	130"
				For Shade Widths over 98"	144"	126"	126"	NA	60"	126"	102"	144"	126"	144"	144"	130"
5% Sheerweave 2390	126"	YES	YES	**Non-Railroaded**												
				Maximum Width	126"**	116"	116"	102"	102"	120"	120"	126"**	126"**	126"**	126"**	126"**
				**R Series clutch - max width - 120"	Maximum Height									Maximum Height		
				For Shade Widths to 72"	144"	144"	144"	90"	144"	144"	144"	144"	144"	NA	NA	NA
				For Shade Widths to 78"	144"	144"	144"	84"	144"	144"	144"	144"	144"	NA	NA	NA
				For Shade Widths to 84"	144"	144"	144"	60"	144"	144"	144"	144"	144"	144"	144"	144"
				For Shade Widths to 90"	144"	144"	144"	42"	132"	144"	144"	144"	144"	144"	144"	144"
				For Shade Widths over 90"	144"	144"	144"	42"	84"	144"	144"	144"	144"	144"	144"	144"
				Railroaded												
				Maximum Width	144"**	120"	120"	102"	102"	120"	120"	144"**	144"**	144"**	144"**	144"**
				**R Series clutch - max width - 120"	Maximum Height									Maximum Height		
				For Shade Widths to 72"	144"	144"	144"	90"	144"	144"	144"	144"	144"	NA	NA	NA
				For Shade Widths to 78"	144"	144"	144"	84"	144"	144"	144"	144"	144"	NA	NA	NA
				For Shade Widths to 84"	144"	144"	144"	60"	144"	144"	144"	144"	144"	144"	144"	144"
				For Shade Widths to 90"	144"	144"	144"	42"	132"	144"	144"	144"	144"	144"	144"	144"
				For Shade Widths to 126"	144"	144"	144"	42"	84"	144"	144"	144"	144"	144"	144"	144"
				For Shade Widths over 126"	144"	NA	NA	NA	NA	NA	NA	144"	144"	144"	144"	144"

PRODUCT SIZE SPECIFICATIONS – CLUTCH LIFT

Minimum and Maximum Standards
For shades 12" wide, maximum length is 60"
All Patterns – Minimum Width: 12" Minimum Height: 12".
Spring Assist strongly recommended on shade sizes over 80" x 80".
For TouchLift Cordless specifications, please refer to Product Specifications – Touch Lift section.

Please Note: Shade sizes that are wider than the fabric roll width indicated will be made with the fabric turned width for length (railroaded). The maximum width for non-railroaded shades is the roll width unless otherwise noted.

Fabrics turned width for length will have a visible seam when fabricated longer than their maximum roll width less 10".
Fabrics turned width for length may have an edge curl. This is not considered a defect in the product.

Material Name	Roll Width	Railroad Option	Splice/ Seam		Standard Clutch	Fabric Valance	Deluxe Valance	Small Cassette	Medium Cassette	Large Cassette	3" Fascia	4" Fascia	Pocket Headrail	Spring Assist Clutch Standard Shade	Spring Assist Clutch 4" Fascia	Spring Assist Clutch Pocket
5% Sheerweave 4000	126"	YES	YES	**Non-Railroaded**												
				Maximum Width	126"**	102"**	102"**	84"	102"**	102"**	102"**	126"**	126"**	126"**	126"**	126"**
				Maximum Height												
				For Shade Widths to 66"	144"	138"	138"	42"	114"	138"	120"	144"	144"	NA	NA	NA
				For Shade Widths to 72"	144"	138"	138"	42"	90"	138"	120"	144"	144"	NA	NA	NA
				For Shade Widths to 84"	144"	126"	126"	42"	90"	126"	120"	144"	144"	144"	144"	90"
				For Shade Widths to 90"	144"	96"	96"	NA	90"	96"	96"	144"	144"	144"	144"	90"
				For Shade Widths to 96"	144"	90"	90"	NA	78"	90"	78"	144"	144"	144"	144"	90"
				For Shade Widths to 102"	144"	60"	60"	NA	60"	60"	60"	144"	144"	144"	144"	90"
				For Shade Widths over 102"	144"	NA	NA	NA	NA	NA	NA	144"	90"	144"	144"	90"
				Railroaded												
				Maximum Width	144"**	102"**	102"**	84"	102"**	102"**	102"**	144"**	144"**	144"**	144"**	144"**
				Maximum Height												
				For Shade Widths to 66"	144"	138"	138"	42"	114"	138"	120"	144"	144"	NA	NA	NA
				For Shade Widths to 72"	144"	138"	138"	42"	90"	138"	120"	144"	144"	NA	NA	NA
				For Shade Widths to 84"	144"	126"	126"	42"	90"	126"	120"	144"	144"	144"	144"	90"
				For Shade Widths to 90"	144"	96"	96"	NA	90"	96"	96"	144"	144"	144"	144"	90"
				For Shade Widths to 96"	144"	90"	90"	NA	78"	90"	78"	144"	144"	144"	144"	90"
				For Shade Widths to 102"	144"	60"	60"	NA	60"	60"	60"	144"	144"	144"	144"	90"
				For Shade Widths over 102"	144"	NA	NA	NA	NA	NA	NA	144"	90"	144"	144"	90"
5% Sheerweave 5000	98"	NO	NO	**Non-Railroaded**												
				Maximum Width	98"**	88"	88"	NA	96"	96"	96"	98"**	98"**	98"**	98"**	98"**
				Maximum Height												
				For Shade Widths to 60"	144"	102"	102"	NA	72"	102"	96"	144"	144"	NA	NA	NA
				For Shade Widths to 66"	144"	102"	102"	NA	72"	102"	96"	144"	126"	NA	NA	NA
				For Shade Widths to 72"	144"	90"	90"	NA	72"	90"	84"	144"	126"	NA	NA	NA
				For Shade Widths to 78"	144"	90"	90"	NA	60"	90"	78"	144"	126"	NA	NA	NA
				For Shade Widths to 84"	144"	90"	90"	NA	54"	90"	78"	144"	126"	144"	114"	NA
				For Shade Widths to 88"	144"	90"	90"	NA	54"	90"	78"	144"	96"	144"	114"	NA
				For Shade Widths to 90"	144"	N/A	N/A	NA	54"	90"	78"	144"	96"	144"	114"	NA
				For Shade Widths to 96"	144"	N/A	N/A	NA	54"	78"	78"	144"	96"	144"	114"	NA
				For Shade Widths over 96"	144"	N/A	N/A	NA	NA	N/A	NA	144"	96"	144"	114"	NA
7% Global Screen	118"	YES	YES	**Non-Railroaded**												
				Maximum Width	118"	108"	108"	90"	118"	118"	118"	118"	118"	118"	118"	118"
				Maximum Height												
				For Shade Widths to 78"	144"	144"	144"	66"	126"	144	144	144"	144"	NA	NA	NA
				For Shade Widths to 84"	144"	144"	144"	60"	126"	144	144	144"	144"	144"	144"	132"
				For Shade Widths to 90"	144"	138"	138"	42"	126"	138"	138"	144"	144"	144"	144"	132"
				For Shade Widths over 90"	144"	132"	132"	NA	60"	132"	108"	144"	144"	144"	144"	132"
				Railroaded												
				Maximum Width	144"**	120"	120"	90"	120"	120"	120"	144"**	144"**	144"**	144"**	144"**
				Maximum Height												
				For Shade Widths to 78"	144"	144"	144"	66"	126"	144	144	144"	144"	NA	NA	NA
				For Shade Widths to 84"	144"	144"	144"	60"	126"	144	144	144"	144"	144"	144"	132"
				For Shade Widths to 90"	144"	138"	138"	42"	126"	138"	138"	144"	144"	144"	144"	132"
				For Shade Widths to 118"	144"	132"	132"	NA	60"	132"	108"	144"	144"	144"	144"	132"
				For Shade Widths over 118"	144"	132"	132"	NA	60"	132"	108"	144"	132"	144"	144"	132"
7% Sheerweave 5000 *(R1008)*	98"	NO	NO	**Non-Railroaded**												
				Maximum Width	98"**	90"	90"	NA	96"	96"	96"	98"**	98"**	98"**	98"**	98"**
				Maximum Height												
				For Shade Widths to 60"	144"	102"	102"	NA	66"	102"	102"	120"	120"	NA	NA	NA
				For Shade Widths over 60"	144"	78"	78"	NA	54"	78"	78"	120"	90"	144"	120"	90"
7% Sheerweave 5000 *(R3408 & R3409)*	98"	NO	NO	**Non-Railroaded**												
				Maximum Width	98"**	88"	88"	84"	98"**	98"**	98"**	98"**	98"**	98"**	98"**	98"**
				Maximum Height												
				For Shade Widths to 60"	144"	144"	144"	42"	102"	144"	132"	144"	144"	NA	NA	NA
				For Shade Widths to 66"	144"	126"	126"	42"	102"	126"	114"	144"	144"	NA	NA	NA
				For Shade Widths to 78"	144"	126"	126"	42"	84"	126"	108"	144"	144"	NA	NA	NA
				For Shade Widths to 84"	144"	126"	126"	42"	84"	126"	108"	144"	138"	144"	144"	84"
				For Shade Widths to 88"	144"	96"	96"	NA	84"	96"	96"	144"	138"	144"	144"	84"
				For Shade Widths to 90"	144"	NA	N/A	NA	84"	96"	96"	144"	138"	144"	144"	84"
				For Shade Widths to 96"	144"	NA	N/A	NA	78"	78"	78"	144"	138"	144"	144"	84"
				For Shade Widths over 96"	144"	NA	N/A	NA	60"	60"	60"	144"	138"	144"	144"	84"

PRODUCT SIZE SPECIFICATIONS – CLUTCH LIFT

Minimum and Maximum Standards
For shades 12" wide, maximum length is 60"
All Patterns – Minimum Width: 12" Minimum Height: 12".
Spring Assist strongly recommended on shade sizes over 80" x 80".
For TouchLift Cordless specifications, please refer to Product Specifications – Touch Lift section.

Please Note: Shade sizes that are wider than the fabric roll width indicated will be made with the fabric turned width for length (railroaded). The maximum width for non-railroaded shades is the roll width unless otherwise noted.

Fabrics turned width for length will have a visible seam when fabricated longer than their maximum roll width less 10".
Fabrics turned width for length may have an edge curl. This is not considered a defect in the product.

Material Name	Roll Width	Railroad Option	Splice/ Seam
10% E Screen	122"	YES	YES

Non-Railroaded

	Standard Clutch	Fabric Valance	Deluxe Valance	Small Cassette	Medium Cassette	Large Cassette	3" Fascia	4" Fascia	Pocket Headrail	Spring Assist Clutch		
										Standard Shade	4" Fascia	Pocket
Maximum Width	122"**	112"	112"	84"	108"	120"	120"	122"**	122"**	122"**	122"**	122"**
	Maximum Height									Maximum Height		
For Shade Widths to 78"	144"	144"	144"	72"	138"	144"	144"	144"	144"	NA	NA	NA
For Shade Widths to 84"	144"	144"	144"	60"	138"	144"	144"	144"	144"	144"	144"	144"
For Shade Widths to 90"	144"	138"	138"	NA	138"	138"	138"	144"	144"	144"	144"	144"
For Shade Widths to 96"	144"	138"	138"	NA	108"	138"	115"	144"	144"	144"	144"	144"
For Shade Widths over 96"	144"	138"	138"	NA	60"	138"	115"	144"	144"	144"	144"	144"

Railroaded

Maximum Width	144"**	120"	120"	84"	108"	120"	120"	144"**	144"**	144"**	144"**	144"**
**R Series clutch - max width - 120"	Maximum Height									Maximum Height		
For Shade Widths to 78"	144"	144"	144"	72"	138"	144"	144"	144"	144"	NA	NA	NA
For Shade Widths to 84"	144"	144"	144"	60"	138"	144"	144"	144"	144"	144"	144"	144"
For Shade Widths to 90"	144"	138"	138"	NA	138"	138"	138"	144"	144"	144"	144"	144"
For Shade Widths to 96"	144"	138"	138"	NA	108"	138"	115"	144"	144"	144"	144"	144"
For Shade Widths to 108"	144"	138"	138"	NA	66"	138"	115"	144"	144"	144"	144"	144"
For Shade Widths to 120"	144"	138"	138"	NA	NA	138"	115"	144"	144"	144"	144"	144"
For Shade Widths over 120"	144"	NA	NA	NA	NA	NA	NA	144"	144"	144"	144"	144"

Material Name	Roll Width	Railroad Option	Splice/ Seam
10% Sheerweave 5000	98"	NO	NO

Non-Railroaded

Maximum Width	98"**	88"	88"	NA	96"	96"	96"	98"**	98"**	98"**	98"**	98"**
**R Series clutch - max width - 96	Maximum Height									Maximum Height		
For Shade Widths to 60"	144"	102"	102"	NA	72"	102"	96"	144"	144"	NA	NA	NA
For Shade Widths to 66"	144"	102"	102"	NA	72"	102"	96"	144"	126"	NA	NA	NA
For Shade Widths to 72"	144"	90"	90"	NA	72"	90"	84"	144"	126"	NA	NA	NA
For Shade Widths to 78"	144"	90"	90"	NA	60"	90"	78"	144"	126"	NA	NA	NA
For Shade Widths to 84"	144"	90"	90"	NA	54"	90"	78"	144"	126"	144"	114"	NA
For Shade Widths to 88"	144"	90"	90"	NA	54"	90"	78"	144"	96"	144"	114"	NA
For Shade Widths to 90"	144"	N/A	N/A	NA	54"	90"	78"	144"	96"	144"	114"	NA
For Shade Widths to 96"	144"	N/A	N/A	NA	54"	78"	78"	144"	96"	144"	114"	NA
For Shade Widths over 96"	144"	N/A	N/A	NA	NA	N/A	NA	144"	96"	144"	114"	NA

PRODUCT SIZE SPECIFICATIONS – CLUTCH LIFT

Minimum and Maximum Standards
For shades 12" wide, maximum length is 60"
All Patterns – Minimum Width: 12" Minimum Height: 12".
Spring Assist strongly recommended on shade sizes over 80" x 80".
For TouchLift Cordless specifications, please refer to Product Specifications – Touch Lift section.

Please Note: Shade sizes that are wider than the fabric roll width indicated will be made with the fabric turned width for length (railroaded). The maximum width for non-railroaded shades is the roll width unless otherwise noted.

Fabrics turned width for length will have a visible seam when fabricated longer than their maximum roll width less 10".
Fabrics turned width for length may have an edge curl. This is not considered a defect in the product.

Material Name	Roll Width	Railroad Option	Splice/ Seam		Standard Clutch	Fabric Valance	Deluxe Valance	Small Cassette	Medium Cassette	Large Cassette	3" Fascia	4" Fascia	Pocket Headrail	Spring Assist Clutch Standard Shade	Spring Assist Clutch 4" Fascia	Spring Assist Clutch Pocket
Alexandria	78"	NO	NO	Non-Railroaded												
				Maximum Width	78"	70"	70"	78"	78"	78"	78"	78"	78"	NA	NA	NA
					Maximum Height									Maximum Height		
				For Shade Widths to 72"	144"	144"*	144"*	108"	144"	144"	144"	144"	144"	NA	NA	NA
				For Shade Widths to 78"	144"	NA	NA	108"	144"	144"	144"	144"	144"	NA	NA	NA
				*Fabric & Deluxe Valances - max shade size is 70" x 144"												
Astaire	94"	NO	NO	Non-Railroaded												
				Maximum Width	94"	NA	NA	NA	94"	94"	94"	94"	94"	94"	94"	94"
					Maximum Height									Maximum Height		
				For Shade Widths to 78"	144"	NA	NA	NA	96"	144"	126"	144"	144"	NA	NA	NA
				For Shade Widths to 84"	144"	NA	NA	NA	96"	120"	108"	144"	144"	144"	144"	80"
				For Shade Widths over 84"	144"	NA	NA	NA	78"	120"	108"	144"	144"	144"	144"	80"
Avila R Blackout	118"	YES	YES	Non-Railroaded												
				Maximum Width	118"	108"	108"	96"	118"	118"	118"	118"	118"	118"	118"	118"
					Maximum Height									Maximum Height		
				For Shade Widths to 78"	144"	144"	144"	84"	144"	144"	144"	144"	144"	NA	NA	NA
				For Shade Widths to 84"	144"	144"	144"	60"	144"	144"	144"	144"	144"	144"	144"	144"
				For Shade Widths to 90"	144"	144"	144"	42"	138"	144"	138"	144"	144"	144"	144"	144"
				For Shade Widths to 96"	144"	144"	144"	42"	108"	144"	132"	144"	144"	144"	144"	144"
				For Shade Widths over 96"	144"	144"	144"	NA	80"	144"	132"	144"	144"	144"	144"	144"
				Railroaded												
				Maximum Width	120"	120"	120"	96"	120"	120"	120"	120"	120"	120"	120"	120"
					Maximum Height									Maximum Height		
				For Shade Widths to 78"	144"	144"	144"	84"	144"	144"	144"	144"	144"	NA	NA	NA
				For Shade Widths to 84"	144"	144"	144"	60"	144"	144"	144"	144"	144"	144"	144"	144"
				For Shade Widths to 90"	144"	144"	144"	42"	138"	144"	138"	144"	144"	144"	144"	144"
				For Shade Widths to 96"	144"	144"	144"	42"	108"	144"	132"	144"	144"	144"	144"	144"
				For Shade Widths to 118"	144"	144"	144"	NA	80"	144"	132"	144"	144"	144"	144"	144"
				For Shade Widths over 118"	120"	120"	120"	NA	78"	120"	120"	120"	120"	120"	120"	120"
Baroque	78"	NO	NO	Non-Railroaded												
				Maximum Width	78"	66"	66"	78"	78"	78"	78"	78"	78"	NA	NA	NA
					Maximum Height									Maximum Height		
				For Shade Widths to 66"	144"	144"	144"	84"	144"	144"	144"	144"	144"	NA	NA	NA
				For Shade Widths over 66"	144"	NA	NA	84"	144"	144"	144"	144"	144"	NA	NA	NA
Blackout - Solid	72"	YES	YES	Non-Railroaded												
				Maximum Width	72"	60"	60"	72"	72"	72"	72"	72"	72"	NA	NA	NA
					Maximum Height									Maximum Height		
				For Shade Widths to 60"	144"	NA	144"	126"	144"	144"	144"	144"	144"	NA	NA	NA
				For Shade Widths to 66"	144"	NA	NA	126"	144"	144"	144"	144"	144"	NA	NA	NA
				For Shade Widths over 66"	144"	NA	NA	114"	144"	144"	144"	144"	144"	NA	NA	NA
				Railroaded												
				Maximum Width	144"**	120"	120"	114"**	120"	120"	120"	144"**	144"**	144"**	144"**	144"**
				**R Series clutch - max width - 120"	Maximum Height									Maximum Height		
				For Shade Widths to 66"	130"	NA	130"	126"	130"	130"	130"	130"	130"	NA	NA	NA
				For Shade Widths to 72"	130"	NA	130"	114"	130"	130"	130"	130"	130"	NA	NA	NA
				For Shade Widths over 72"	130"	NA	130"	48"	120"	130"	130"	130"	130"	130"	130"	130"
Brilliance	118"	NO	NO	Non-Railroaded												
				Maximum Width	118"	108"	108"	96"	118"	118"	118"	118"	118"	118"	118"	118"
					Maximum Height									Maximum Height		
				For Shade Widths to 78"	144"	144"	144"	80"	144"	144"	144"	144"	144"	NA	NA	NA
				For Shade Widths to 84"	144"	144"	144"	80"	144"	144"	144"	144"	144"	144"	144"	144"
				For Shade Widths to 90"	144"	144"	144"	72"	144"	144"	144"	144"	144"	144"	144"	144"
				For Shade Widths over 90"	144"	144"	144"	48"	72	144"	126"	144"	144"	144"	144"	144"
Brilliance Blackout	118"	NO	NO	Non-Railroaded												
				Maximum Width	118"	108"	108"	90"	108"	118"	118"	118"	118"	118"	118"	118"
					Maximum Height									Maximum Height		
				For Shade Widths to 78"	144"	144"	144"	60"	114"	144"	144"	144"	144"	NA	NA	NA
				For Shade Widths to 84"	144"	144"	144"	60"	114"	144"	144"	144"	144"	144"	144"	120"
				For Shade Widths to 90"	144"	138"	138"	42"	114"	138"	138"	144"	144"	144"	144"	120"
				For Shade Widths over 90"	144"	114"	114"	NA	66"	114"	96"	144"	144"	144"	144"	120"

PRODUCT SIZE SPECIFICATIONS – CLUTCH LIFT

Minimum and Maximum Standards
For shades 12" wide, maximum length is 60"
All Patterns – Minimum Width: 12" Minimum Height: 12".
Spring Assist strongly recommended on shade sizes over 80" x 80".
For TouchLift Cordless specifications, please refer to Product Specifications – Touch Lift section.

Please Note: Shade sizes that are wider than the fabric roll width indicated will be made with the fabric turned width for length (railroaded). The maximum width for non-railroaded shades is the roll width unless otherwise noted.

Fabrics turned width for length will have a visible seam when fabricated longer than their maximum roll width less 10".
Fabrics turned width for length may have an edge curl. This is not considered a defect in the product.

Material Name	Roll Width	Railroad Option	Splice/ Seam		Standard Clutch	Fabric Valance	Deluxe Valance	Small Cassette	Medium Cassette	Large Cassette	3" Fascia	4" Fascia	Pocket Headrail	Spring Assist Clutch Standard Shade	Spring Assist Clutch 4" Fascia	Spring Assist Clutch Pocket
Cararra	110"	NO	NO	Non-Railroaded												
				Maximum Width	110"	100"	100"	96"	110"	110"	110"	110"	110"	110"	110"	110"
					Maximum Height									Maximum Height		
				For Shade Widths to 78"	144"	144"	144"	84"	144"	144"	144"	144"	144"	NA	NA	NA
				For Shade Widths to 84"	144"	144"	144"	84"	144"	144"	144"	144"	144"	144"	144"	144"
				For Shade Widths to 90"	144"	144"	144"	72"	144"	144"	144"	144"	144"	144"	144"	144"
				For Shade Widths over 90"	144"	144"	144"	48"	84"	144"	138"	144"	144"	144"	144"	144"
Cararra Blackout	110"	NO	NO	Non-Railroaded												
				Maximum Width	110"**	96"	96"	84"	108"**	108"**	108"**	110"**	110"**	110"**	110"**	110"**
				**R Series clutch - max width - 96"	Maximum Height									Maximum Height		
				For Shade Widths to 66"	144"	144"	144"	48"	114"	144"	132"	144"	144"	NA	NA	NA
				For Shade Widths to 72"	144"	144"	144"	48"	96"	144"	132"	144"	144"	NA	NA	NA
				For Shade Widths to 84"	144"	126"	126"	42"	96"	126"	126"	144"	144"	144"	144"	102"
				For Shade Widths to 90"	144"	96"	96"	NA	96"	96"	96"	144"	144"	144"	144"	102"
				For Shade Widths to 96"	144"	96"	96"	NA	78"	96"	78"	144"	144"	144"	144"	102"
				For Shade Widths to 102"	144"	NA	NA	NA	60"	60"	60"	144"	144"	144"	144"	102"
				For Shade Widths over 102"	144"	NA	NA	NA	48"	48"	48"	144"	138"	144"	144"	102"
Claudio	110"	NO	NO	Non-Railroaded												
				Maximum Width	110"	100"	100"	96"	110"	110"	110"	110"	110"	110"	110"	110"
					Maximum Height									Maximum Height		
				For Shade Widths to 78"	144"	144"	144"	96"	144"	144"	144"	144"	144"	NA	NA	NA
				For Shade Widths to 84"	144"	144"	144"	96"	144"	144"	144"	144"	144"	144"	144"	144"
				For Shade Widths to 90"	144"	144"	144"	72"	144"	144"	144"	144"	144"	144"	144"	144"
				For Shade Widths over 90"	144"	144"	144"	48"	90"	144"	144"	144"	144"	144"	144"	144"
Claudio Blackout	110"	NO	NO	Non-Railroaded												
				Maximum Width	110"	100"	100"	90"	108"	110"	110"	110"	110"	110"	110"	110"
					Maximum Height									Maximum Height		
				For Shade Widths to 78"	144"	144"	144"	60"	114"	144"	144"	144"	144"	NA	NA	NA
				For Shade Widths to 84"	144"	144"	144"	60"	114"	144"	144"	144"	144"	144"	144"	120"
				For Shade Widths to 90"	144"	138"	138"	42"	114"	138"	138"	144"	144"	144"	144"	120"
				For Shade Widths over 90"	144"	120"	120"	NA	66"	120"	96"	144"	144"	144"	144"	120"
Cusco	110"	YES	YES	Non-Railroaded												
				Maximum Width	110"	100"	100"	90"	110"	110"	110"	110"	110"	110"	110"	110"
					Maximum Height									Maximum Height		
				For Shade Widths to 78"	144"	144"	144"	66"	126"	144"	144"	144"	144"	NA	NA	NA
				For Shade Widths to 84"	144"	144"	144"	60"	126"	144"	144"	144"	144"	144"	144"	132"
				For Shade Widths to 90"	144"	138"	138"	42"	126"	138"	138"	144"	144"	144"	144"	132"
				For Shade Widths to 96"	144"	132"	132"	NA	108"	132"	108"	144"	144"	144"	144"	132"
				For Shade Widths to 100"	144"	132"	132"	NA	84"	132"	108"	144"	144"	144"	144"	132"
				For Shade Widths to 102"	144"	NA	NA	NA	84"	132"	108"	144"	144"	144"	144"	132"
				For Shade Widths over 102"	144"	NA	NA	NA	60"	132"	108"	144"	144"	144"	144"	132"
				Railroaded												
				Maximum Width	144"***	120"	120"	90"	120"	120"	120"	144"***	144"***	144"***	144"***	144"***
				**R Series clutch - max width - 120"	Maximum Height									Maximum Height		
				For Shade Widths to 78"	144"	144"	144"	66"	126"	144"	144"	144"	144"	NA	NA	NA
				For Shade Widths to 84"	144"	144"	144"	60"	126"	144"	144"	144"	144"	144"	144"	132"
				For Shade Widths to 90"	144"	138"	138"	42"	126"	138"	138"	144"	144"	144"	144"	132"
				For Shade Widths to 96"	144"	132"	132"	NA	108"	132"	108"	144"	144"	144"	144"	132"
				For Shade Widths to 102"	144"	132"	132"	NA	84"	132"	108"	144"	144"	144"	144"	132"
				For Shade Widths to 110"	144"	132"	132"	NA	60"	132"	108"	144"	144"	144"	144"	132"
				For Shade Widths over 110"	144"	132"	132"	NA	60"	132"	108"	144"	132"	144"	144"	132"
Darien	90"	NO	NO	Non-Railroaded												
				Maximum Width	90"	80"	80"	90"	90"	90"	90"	90"	90"	90"	90"	90"
					Maximum Height									Maximum Height		
				For Shade Widths to 78"	144"	144"	144"	114"	144"	144"	144"	144"	144"	NA	NA	NA
				For Shade Widths to 80"	144"	144"	144"	102"	144"	144"	144"	144"	144"	144"	144"	144"
				For Shade Widths to 84"	144"	NA	NA	102"	144"	144"	144"	144"	144"	144"	144"	144"
				For Shade Widths over 84"	144"	NA	NA	72"	144"	144"	144"	144"	144"	144"	144"	144"
Drizzle	78"	YES	YES	Non-Railroaded												
				Maximum Width	78"	70"	70"	78"	78"	78"	78"	78"	78"	NA	NA	NA
					Maximum Height									Maximum Height		
				For Shade Widths to 72"	144"	144"*	144"*	90"	144"	144"	144"	144"	144"	NA	NA	NA
				For Shade Widths to 78"	144"	NA	NA	90"	144"	144"	144"	144"	144"	NA	NA	NA
					* Fabric & Deluxe Valances - max shade size is 70" x 144"											
				Railroaded												
				Maximum Width	120"	120"	120"	96"	120"	120"	120"	120"	120"	120"	120"	120"
					Maximum Height									Maximum Height		
				For Shade Widths to 72"	144"	144"	144"	90"	144"	144"	144"	144"	144"	NA	NA	NA
				For Shade Widths to 78"	140"	140"	140"	90"	140"	140"	140"	140"	140"	NA	NA	NA
				For Shade Widths to 84"	120"	120"	120"	90"	120"	120"	120"	120"	120"	120"	120"	120"
				For Shade Widths to 90"	120"	120"	120"	72"	120"	120"	120"	120"	120"	120"	120"	120"
				For Shade Widths to 96"	120"	120"	120"	48"	120"	120"	120"	120"	120"	120"	120"	120"
				For Shade Widths over 96"	120"	120"	120"	NA	85"	120"	120"	120"	120"	120"	120"	120"

PRODUCT SIZE SPECIFICATIONS – CLUTCH LIFT

Minimum and Maximum Standards
For shades 12" wide, maximum length is 60"
All Patterns – Minimum Width: 12" Minimum Height: 12".
Spring Assist strongly recommended on shade sizes over 80" x 80".
For TouchLift Cordless specifications, please refer to Product Specifications – Touch Lift section.

Please Note: Shade sizes that are wider than the fabric roll width indicated will be made with the fabric turned width for length (railroaded). The maximum width for non-railroaded shades is the roll width unless otherwise noted.

Fabrics turned width for length will have a visible seam when fabricated longer than their maximum roll width less 10".
Fabrics turned width for length may have an edge curl. This is not considered a defect in the product.

Material Name	Roll Width	Railroad Option	Splice/ Seam		Standard Clutch	Fabric Valance	Deluxe Valance	Small Cassette	Medium Cassette	Large Cassette	3" Fascia	4" Fascia	Pocket Headrail	Spring Assist Clutch		
														Standard Shade	4" Fascia	Pocket
Fiona	78"	NO	NO	Non-Railroaded												
				Maximum Width	78"	70"	70"	78"	78"	78"	78"	78"	78"	NA	NA	NA
					Maximum Height									Maximum Height		
				For Shade Widths to 70"	144"	144"	144"	90"	144"	144"	144"	144"	144"	NA	NA	NA
				For Shade Widths to 72"	144"	NA	NA	90"	144"	144"	144"	144"	144"	NA	NA	NA
				For Shade Widths over 72"	144"	NA	NA	84"	144"	144"	144"	144"	144"	NA	NA	NA
Flocke Blackout	94"	YES	YES	Non-Railroaded												
				Maximum Width	94"	84"	84"	72"	94"	94"	94"	94"	94"	94"	94"	94"
					Maximum Height									Maximum Height		
				For Shade Widths to 78"	144"	144"	144"	60"*	114"	144"	144"	144"	144"	NA	NA	NA
				For Shade Widths to 84"	144"	126"	126"	NA	114"	126"	126"	144"	144"	144"	144"	132"
				For Shade Widths to 90"	144"	NA	NA	NA	96"	96"	96"	144"	144"	144"	144"	132"
				For Shade Widths over 90"	144"	NA	NA	NA	78"	78"	78"	144"	144"	144"	144"	132"
					*Small cassette - max shade size is 72" x 60"											
				Railroaded												
				Maximum Width	144"**	96"	96"	72"	96"	96"	96"	144"**	144"**	144"**	144"**	144"**
				**R Series clutch - max width - 96"	Maximum Height									Maximum Height		
				For Shade Widths to 78"	144"	144"	144"	60"*	114"	144"	144"	144"	144"	NA	NA	NA
				For Shade Widths to 84"	144"	126"	126"	NA	114"	126"	126"	144"	144"	144"	144"	132"
				For Shade Widths to 90"	144"	96"	96"	NA	96"	96"	96"	144"	144"	144"	144"	132"
				For Shade Widths to 96"	144"	78"	78"	NA	78"	78"	78"	144"	144"	144"	144"	132"
				For Shade Widths over 96"	144"	NA	NA	NA	NA	NA	NA	144"	132"	144"	144"	132"
					*Small cassette - max shade size is 72" x 60"											
Hayworth	98"	YES	YES	Non-Railroaded												
				Maximum Width	98"	90"	90"	96"	98"	98"	98"	98"	98"	98"	98"	98"
					Maximum Height									Maximum Height		
				For Shade Widths to 84"	144"	144"	144"	102"	144"	144"	144"	144"	144"	144"	144"	144"
				For Shade Widths to 90"	144"	144"	144"	72"	144"	144"	144"	144"	144"	144"	144"	144"
				For Shade Widths over 90"	144"	NA	NA	48"	144"	144"	144"	144"	144"	144"	144"	144"
				Railroaded												
				Maximum Width	144"**	126"	126"	126"	126"	126"	126"	144"**	144"**	144"**	144"**	144"**
				**R Series clutch - max width -126 "	Maximum Height									Maximum Height		
				For Shade Widths to 84"	144"	144"	144"	102"	144"	144"	144"	144"	144"	144"	144"	144"
				For Shade Widths to 90"	144"	144"	144"	72"	144"	144"	144"	144"	144"	144"	144"	144"
				For Shade Widths to 98"	144"	144"	144"	48"	144"	144"	144"	144"	144"	144"	144"	144"
				For Shade Widths over 98"	144"	144"	144"	42"	120"	144"	144"	144"	144"	144"	144"	144"
Illusion	72"	YES	NO	Non-Railroaded												
				Maximum Width	72"	62"	62"	72"	72"	72"	72"	72"	72"	NA	NA	NA
					Maximum Height									Maximum Height		
				For Shade Widths to 62"	144"	144"	144"	78"	144"	144"	144"	144"	144"	NA	NA	NA
				For Shade Widths over 62"	144"	NA	NA	78"	144"	144"	144"	144"	144"	NA	NA	NA
				Railroaded												
				Maximum Width	120"	120"	120"	96"	120"	120"	120"	120"	120"	120"	120"	120"
					Maximum Height									Maximum Height		
				For Shade Widths to 72"	60"	60"	60"	60"	60"	60"	60"	60"	60"	NA	NA	NA
				For Shade Widths over 72"	60"	60"	60"	48"	60"	60"	60"	60"	60"	NA	NA	NA
Jasper	110"	YES	YES	Non-Railroaded												
				Maximum Width	110"	100"	100"	72"	108"	110"	110"	110"	110"	110"	110"	110"
					Maximum Height									Maximum Height		
				For Shade Widths to 84"	144"	144"	144"	60"*	144"	144"	144"	144"	144"	144"	144"	144"
				For Shade Widths to 90"	144"	138"	138"	NA	138"	144"	138"	144"	144"	144"	144"	144"
				For Shade Widths to 96"	144"	108"	108"	NA	108"	144"	120"	144"	144"	144"	144"	144"
				For Shade Widths over 96"	144"	84"	84"	NA	70"	144"	120"	144"	144"	144"	144"	144"
					*Small cassette - max shade size is 72" x 60"											
				Railroaded												
				Maximum Width	144"**	120"	120"	72"	108"	120"	120"	144"**	144"**	144"**	144"**	144"**
				**R Series clutch - max width - 120"	Maximum Height									Maximum Height		
				For Shade Widths to 84"	144"	144"	144"	60"*	144"	144"	144"	144"	144"	144"	144"	144"
				For Shade Widths to 90"	144"	144"	144"	NA	138"	144"	138"	144"	144"	144"	144"	144"
				For Shade Widths to 96"	144"	144"	144"	NA	108"	144"	120"	144"	144"	144"	144"	144"
				For Shade Widths to 102"	144"	144"	144"	NA	84"	144"	120"	144"	144"	144"	144"	144"
				For Shade Widths over 102"	144"	144"	144"	NA	70"	144"	120"	144"	144"	144"	144"	144"
					*Small cassette - max shade size is 72" x 60"											

PRODUCT SIZE SPECIFICATIONS – CLUTCH LIFT

Minimum and Maximum Standards
For shades 12" wide, maximum length is 60"
All Patterns – Minimum Width: 12" Minimum Height: 12".
Spring Assist strongly recommended on shade sizes over 80" x 80".
For TouchLift Cordless specifications, please refer to Product Specifications – Touch Lift section.

Please Note: Shade sizes that are wider than the fabric roll width indicated will be made with the fabric turned width for length (railroaded). The maximum width for non-railroaded shades is the roll width unless otherwise noted.

Fabrics turned width for length will have a visible seam when fabricated longer than their maximum roll width less 10".
Fabrics turned width for length may have an edge curl. This is not considered a defect in the product.

Material Name	Roll Width	Railroad Option	Splice/ Seam		Standard Clutch	Fabric Valance	Deluxe Valance	Small Cassette	Medium Cassette	Large Cassette	3" Fascia	4" Fascia	Pocket Headrail	Spring Assist Clutch Standard Shade	Spring Assist Clutch 4" Fascia	Spring Assist Clutch Pocket
Linview	94"	YES	YES	**Non-Railroaded**												
				Maximum Width	94"	84"	84"	94"	94"	94"	94"	94"	94"	94"	94"	94"
					Maximum Height									Maximum Height		
				For Shade Widths to 84"	120"	120"	120"	90"	120"	120"	120"	120"	120"	120"	120"	120"
				For Shade Widths to 90"	120"	NA	NA	72"	120"	120"	120"	120"	120"	120"	120"	120"
				For Shade Widths over 90"	120"	NA	NA	48"	120"	120"	120"	120"	120"	120"	120"	120"
				Railroaded												
				Maximum Width	120"	120"	120"	120"	120"	120"	120"	120"	120"	120"	120"	120"
					Maximum Height									Maximum Height		
				For Shade Widths to 84"	120"	120"	120"	90"	120"	120"	120"	120"	120"	120"	120"	120"
				For Shade Widths to 90"	120"	120"	120"	72"	120"	120"	120"	120"	120"	120"	120"	120"
				For Shade Widths to 94"	120"	120"	120"	48"	120"	120"	120"	120"	120"	120"	120"	120"
				For Shade Widths over 94"	120"	120"	120"	48"	90"	120"	120"	120"	120"	120"	120"	120"
Linview Blackout	94"	NO	NO	**Non-Railroaded**												
				Maximum Width	94"	84"	84"	94"	94"	94"	94"	94"	94"	94"	94"	94"
					Maximum Height									Maximum Height		
				For Shade Widths to 78"	144"	144"	144"	78"	144"	144"	144"	144"	144"	NA	NA	NA
				For Shade Widths to 84"	144"	144"	144"	60"	144"	144"	144"	144"	144"	144"	144"	144"
				For Shade Widths to 90"	144"	NA	NA	42"	138"	144"	138"	144"	144"	144"	144"	144"
				For Shade Widths over 90"	144"	NA	NA	38"	108"	144"	132"	144"	144"	144"	144"	144"
Montero	94"	NO	NO	**Non-Railroaded**												
				Maximum Width	94"	84"	84"	72"	94"	94"	94"	94"	94"	94"	94"	94"
					Maximum Height									Maximum Height		
				For Shade Widths to 78"	144"	144"	144"	60"*	132"	144"	144"	144"	144"	NA	NA	NA
				For Shade Widths to 84"	144"	138"	138"	NA	132"	138"	138"	144"	144"	144"	144"	138"
				For Shade Widths to 90"	144"	NA	NA	NA	108"	108"	108"	144"	144"	144"	144"	138"
				For Shade Widths over 90"	144"	NA	NA	NA	84"	84"	84"	144"	138"	144"	144"	138"
				*Small cassette - max shade size is 72" x 60"												
Moravia	96"	NO	NO	**Non-Railroaded**												
				Maximum Width	96"	86"	86"	96"	96"	96"	96"	96"	96"	96"	96"	96"
					Maximum Height									Maximum Height		
				For Shade Widths to 78"	144"	144"	144"	74"	144"	144"	144"	144"	144"	NA	NA	NA
				For Shade Widths to 84"	144"	144"	144"	74"	138"	144"	144"	144"	144"	144"	144"	144"
				For Shade Widths to 86"	144"	144"	144"	72"	138"	144"	144"	144"	144"	144"	144"	144"
				For Shade Widths to 90"	144"	NA	NA	72"	138"	144"	144"	144"	144"	144"	144"	144"
				For Shade Widths over 90"	144"	NA	NA	48"	138"	144"	144"	144"	144"	144"	144"	144"
Santa Cruz	94"	NO	NO	**Non-Railroaded**												
				Maximum Width	94"	84"	84"	72"	94"	94"	94"	94"	94"	94"	94"	94"
					Maximum Height									Maximum Height		
				For Shade Widths to 78"	144"	144"	144"	60"*	132"	144"	144"	144"	144"	NA	NA	NA
				For Shade Widths to 84"	144"	138"	138"	NA	132"	138"	138"	144"	144"	144"	144"	144"
				For Shade Widths to 90"	144"	NA	NA	NA	108"	108"	108"	144"	144"	144"	144"	144"
				For Shade Widths over 90"	144"	NA	NA	NA	84"	84"	84"	144"	138"	144"	144"	138"
				*Small cassette - max shade size is 72" x 60"												
Santa Cruz Blackout	94"	NO	NO	**Non-Railroaded**												
				Maximum Width	94"	84"	84"	84"	94"	94"	94"	94"	94"	94"	94"	94"
					Maximum Height									Maximum Height		
				For Shade Widths to 72"	144"	144"	144"	48"	114"	144"	138"	144"	144"	NA	NA	NA
				For Shade Widths to 78"	144"	144"	144"	48"	102"	144"	138"	144"	144"	NA	NA	NA
				For Shade Widths to 84"	144"	126"	126"	42"	102"	126"	126"	144"	144"	144"	144"	102"
				For Shade Widths to 90"	144"	NA	NA	NA	96"	102"	96"	144"	144"	144"	144"	102"
				For Shade Widths over 90"	144"	NA	NA	NA	78"	102"	84"	144"	144"	144"	144"	102"
Scala Blackout	110"	YES	YES	**Non-Railroaded**												
				Maximum Width	110"	100"	100"	72"	110"	110"	110"	110"	110"	110"	110"	110"
					Maximum Height									Maximum Height		
				For Shade Widths to 84"	144"	NA	144"	74"*	144"	144"	144"	144"	144"	144"	144"	144"
				For Shade Widths to 90"	144"	NA	144"	NA	138"	144"	138"	144"	144"	144"	144"	144"
				For Shade Widths to 96"	144"	NA	144"	NA	108"	144"	132"	144"	144"	144"	144"	144"
				For Shade Widths over 96"	144"	NA	144"	NA	72"	144"	132"	144"	144"	144"	144"	144"
				*Small cassette - max shade width is 72" x 74"												
				Railroaded												
				Maximum Width	144"**	120"	120"	72"	114"	120"	120"	144"**	144"**	144"**	144"**	144"**
				**R Series clutch - max width - 120"	Maximum Height									Maximum Height		
				For Shade Widths to 84"	144"	NA	144"	74"*	144"	144"	144"	144"	144"	144"	144"	144"
				For Shade Widths to 90"	144"	NA	144"	NA	138"	144"	138"	144"	144"	144"	144"	144"
				For Shade Widths to 96"	144"	NA	144"	NA	108"	144"	132"	144"	144"	144"	144"	144"
				For Shade Widths to 102"	144"	NA	144"	NA	84"	144"	132"	144"	144"	144"	144"	144"
				For Shade Widths over 102"	144"	NA	144"	NA	72"	144"	132"	144"	144"	144"	144"	144"
				*Small cassette - max shade width is 72" x 74"												

PRODUCT SIZE SPECIFICATIONS – CLUTCH LIFT

Minimum and Maximum Standards
For shades 12" wide, maximum length is 60"
All Patterns – Minimum Width: 12" Minimum Height: 12".
Spring Assist strongly recommended on shade sizes over 80" x 80".
For TouchLift Cordless specifications, please refer to Product Specifications – Touch Lift section.

Please Note: Shade sizes that are wider than the fabric roll width indicated will be made with the fabric turned width for length (railroaded). The maximum width for non-railroaded shades is the roll width unless otherwise noted.

Fabrics turned width for length will have a visible seam when fabricated longer than their maximum roll width less 10".
Fabrics turned width for length may have an edge curl. This is not considered a defect in the product.

Material Name	Roll Width	Railroad Option	Splice/ Seam		Standard Clutch	Fabric Valance	Deluxe Valance	Small Cassette	Medium Cassette	Large Cassette	3" Fascia	4" Fascia	Pocket Headrail	Spring Assist Clutch Standard Shade	Spring Assist Clutch 4" Fascia	Spring Assist Clutch Pocket
Sorrento	108"	NO	NO	Non-Railroaded												
				Maximum Width	108"	100"	100"	96"	108"	108"	108"	108"	108"	108"	108"	108"
					Maximum Height									Maximum Height		
				For Shade Widths to 90 "	144"	144"	144"	54"	108"	144"	144"	144"	144"	144"	144"	114"
				For Shade Widths to 96 "	144"	144"	144"	48"	108"	144"	144"	144"	144"	144"	144"	114"
				For Shade Widths over 96"	144"	108"	108"	NA	108"	108"	90"	144"	144"	144"	144"	114"
Sunscreen 7000	118"	YES	YES	Non-Railroaded												
				Maximum Width	118"**	108"**	108"**	84"	108"**	108"**	108"**	118"**	118"**	118"**	118"**	118"**
				**R Series clutch - max width - 96"	Maximum Height									Maximum Height		
				For Shade Widths to 66"	144"	144"	144"	48"	114"	144"	132	144"	144"	NA	NA	NA
				For Shade Widths to 72"	144"	144"	144"	48"	96"	144"	132	144"	144"	NA	NA	NA
				For Shade Widths to 84"	144"	126"	126"	42"	96"	126"	126"	144"	144"	144"	144"	102"
				For Shade Widths to 90"	144"	96"	96"	NA	96"	96"	96"	144"	144"	144"	144"	102"
				For Shade Widths to 96"	144"	96"	96"	NA	78"	96"	78"	144"	144"	144"	144"	102"
				For Shade Widths to 102"	144"	60"	60"	NA	60"	60"	60"	144"	144"	144"	144"	102"
				For Shade Widths over 102"	144"	48"	48"	NA	48"	48"	48"	144"	144"	144"	144"	102"
				Railroaded												
				Maximum Width	144"**	108"**	108"**	84"	108"**	108"**	108"**	144"**	144"**	144"**	144"**	144"**
				**R Series clutch - max width - 96"	Maximum Height									Maximum Height		
				For Shade Widths to 66"	144"	144"	144"	48"	114"	144"	132	144"	144"	NA	NA	NA
				For Shade Widths to 72"	144"	144"	144"	48"	96"	144"	132	144"	144"	NA	NA	NA
				For Shade Widths to 84"	144"	126"	126"	42"	96"	126"	126"	144"	144"	144"	144"	102"
				For Shade Widths to 90"	144"	96"	96"	NA	96"	96"	96"	144"	144"	144"	144"	102"
				For Shade Widths to 96"	144"	96"	96"	NA	78"	96"	78"	144"	144"	144"	144"	102"
				For Shade Widths to 102"	144"	60"	60"	NA	60"	60"	60"	144"	144"	144"	144"	102"
				For Shade Widths to 108"	144"	48"	48"	NA	48"	48"	48"	144"	144"	144"	144"	102"
				For Shade Widths to 118"	144"	NA	NA	NA	NA	NA	NA	144"	114"	144"	144"	102"
				For Shade Widths over 118"	144	NA	NA	NA	NA	NA	NA	144"	102"	144"	144"	102"
Uptown	78"	YES	NO	Non-Railroaded												
				Maximum Width	78"	66"	66"	78"	78"	78"	78"	78"	78"	NA	NA	NA
					Maximum Height									Maximum Height		
				For Shade Widths to 66"	144"	144"	144"	126"	144"	144"	144"	144"	144"	NA	NA	NA
				For Shade Widths over 66"	144"	NA	NA	126"	144"	144"	144"	144"	144"	NA	NA	NA
				Railroaded												
				Maximum Width	144"**	126"	126"	120"	126"	126"	126"	144"**	144"**	NA	NA	NA
				**R Series clutch - max width - 126"	Maximum Height									Maximum Height		
				For Shade Widths to 96"	68"	68"	68"	66"	68"	68"	68"	68"	68"	NA	NA	NA
				For Shade Widths over 96"	66"	66"	66"	66"	66"	66"	66"	66"	66"	NA	NA	NA
Uptown Room Darkening	78"	YES	NO	Non-Railroaded												
				Maximum Width	78"	66"	66"	78"	78"	78"	78"	78"	78"	NA	NA	NA
					Maximum Height									Maximum Height		
				For Shade Widths to 66"	144"	144"	144"	96"	144"	144"	144"	144"	144"	NA	NA	NA
				For Shade Widths to 72"	144"	NA	NA	96"	144"	144"	144"	144"	144"	NA	NA	NA
				For Shade Widths over 72"	144"	NA	NA	84"	144"	144"	144"	144"	144"	NA	NA	NA
				Railroaded												
				Maximum Width	144"**	120"	120"	114"	120"	120"	120"	144"**	144"**	144"**	144"**	144"**
				**R Series clutch - max width - 120"	Maximum Height									Maximum Height		
				For Shade Widths to 72"	68"	68"	68"	68"	68"	68"	68"	68"	68"	NA	NA	NA
				For Shade Widths to 84"	68"	68"	68"	60"	68"	68"	68"	68"	68"	NA	NA	NA
				For Shade Widths to 96"	68"	68"	68"	48"	68"	68"	68"	68"	68"	NA	NA	NA
				For Shade Widths over 96"	66"	66"	66"	48"	66"	66"	66"	66"	66"	NA	NA	NA

PRODUCT SIZE SPECIFICATIONS – CLUTCH LIFT

Minimum and Maximum Standards
For shades 12" wide, maximum length is 60"
All Patterns – Minimum Width: 12" Minimum Height: 12".
Spring Assist strongly recommended on shade sizes over 80" x 80".
For TouchLift Cordless specifications, please refer to Product Specifications – Touch Lift section.

Please Note: Shade sizes that are wider than the fabric roll width indicated will be made with the fabric turned width for length (railroaded). The maximum width for non-railroaded shades is the roll width unless otherwise noted.

Fabrics turned width for length will have a visible seam when fabricated longer than their maximum roll width less 10".
Fabrics turned width for length may have an edge curl. This is not considered a defect in the product.

Material Name	Roll Width	Railroad Option	Splice/ Seam		Standard Clutch	Fabric Valance	Deluxe Valance	Small Cassette	Medium Cassette	Large Cassette	3" Fascia	4" Fascia	Pocket Headrail	Spring Assist Clutch Standard Shade	Spring Assist Clutch 4" Fascia	Spring Assist Clutch Pocket
World Textures 1	78"	YES	YES	**Non-Railroaded**												
				Maximum Width	78"	66"	66"	78"	78"	78"	78"	78"	78"	NA	NA	NA
					Maximum Height									Maximum Height		
				For Shade Widths to 66"	144"	144"	144"	66"	144"	144"	144"	144"	144"	NA	NA	NA
				For Shade Widths over 66"	144"	NA	NA	66"	126"	144"	144"	144"	144"	NA	NA	NA
				Railroaded												
				Maximum Width	144"**	120"	120"	90"	120"	120"	120"	144"**	144"**	144"**	144"**	144"**
				**R Series clutch - max width - 120"	Maximum Height									Maximum Height		
				For Shade Widths to 66"	144"	144"	144"	66"	144"	144"	144"	144"	144"	NA	NA	NA
				For Shade Widths to 78"	144"	144"	144"	66"	126"	144"	144"	144"	144"	NA	NA	NA
				For Shade Widths over 78"	144"	132"	132"	42"	60"	132"	108"	144"	132"	144"	144"	132"
World Textures 1 Blackout	78"	YES	YES	**Non-Railroaded**												
				Maximum Width	78"	66"	66"	78"	78"	78"	78"	78"	78"	NA	NA	NA
					Maximum Height									Maximum Height		
				For Shade Widths to 66"	144"	144"	144"	60"	144"	144"	144"	144"	144"	NA	NA	NA
				For Shade Widths over 66"	144"	NA	NA	60"	114"	144"	144"	144"	144"	NA	NA	NA
				Railroaded												
				Maximum Width	144"**	120"	120"	90"	120"	120"	120	144"**	144"**	144"**	144"**	144"**
				**R Series clutch - max width - 120"	Maximum Height									Maximum Height		
				For Shade Widths to 66"	144"	144"	144"	60"	144"	144"	144"	144"	144"	NA	NA	NA
				For Shade Widths to 78"	144"	144"	144"	60"	114"	144"	144"	144"	144"	NA	NA	NA
				For Shade Widths over 78"	144"	120"	120"	42"	54"	120"	96"	144"	120"	144"	144"	120"
World Textures 2	80"	YES	YES	**Non-Railroaded**												
				Maximum Width	80"	70"	70	80"	80"	80"	80"	80"	80"	80"	80"	80"
					Maximum Height									Maximum Height		
				For Shade Widths to 70"	144"	132"	132"	42"	108"	132"	120"	144"	144"	NA	NA	NA
				For Shade Widths to 72"	144"	NA	NA	42"	108"	132"	120"	144"	144"	NA	NA	NA
				For Shade Widths to 78"	144"	NA	NA	42"	84"	132"	120"	144"	144"	NA	NA	NA
				For Shade Widths over 78"	144"	NA	NA	42"	84"	132"	120"	144"	144"	144"	144"	90"
				Railroaded												
				Maximum Width	144"**	120"	120"	90"	114"	120"	120"	144"**	144"**	144"**	144"**	144"**
				**R Series clutch - max width - 120"	Maximum Height									Maximum Height		
				For Shade Widths to 72"	144"	132"	132"	42"	108"	132"	120"	144"	144"	NA	NA	NA
				For Shade Widths to 78"	144"	132"	132"	42"	84"	132"	120"	144"	144"	NA	NA	NA
				For Shade Widths to 80"	144"	132"	132"	42"	84"	132"	120"	144"	144"	144"	144"	90"
				For Shade Widths over 80"	144	84"	84"	42"	48"	84"	72"	144"	90"	144"	144"	90"
World Textures 2 Blackout	80"	YES	YES	**Non-Railroaded**												
				Maximum Width	80"	70"	70"	80"	80"	80"	80"	80"	80"	80"	80"	80"
					Maximum Height									Maximum Height		
				For Shade Widths to 70"	144"	144"	144"	60"	114"	144"	144"	144"	144"	NA	NA	NA
				For Shade Widths to 78"	144"	NA	NA	60"	114"	144"	144"	144"	144"	NA	NA	NA
				For Shade Widths over 78"	144"	NA	NA	60"	114"	144"	144"	144"	144"	144"	144"	120"
				Railroaded												
				Maximum Width	144"**	120"	120"	90"	120"	120"	120	144"**	144"**	144"**	144"**	144"**
				**R Series clutch - max width - 120"	Maximum Height									Maximum Height		
				For Shade Widths to 78"	144"	144"	144"	60"	114"	144"	144"	144"	144"	NA	NA	NA
				For Shade Widths to 80"	144"	144"	144"	60"	114"	144"	144"	144"	144"	144"	144"	120"
				For Shade Widths over 80"	144"	120"	120"	42"	54"	120"	96"	144"	120"	144"	144"	120"

PRODUCT SIZE SPECIFICATIONS – TOUCHLIFT

Minimum shade width – 18" Minimum shade height – 24" Fabric Wrapped Bottomrail Shades over 42" will have 2 handles				No Top Treatment				Deluxe Valance				Fabric Valance			
				Non-		Railroaded		Non-		Railroaded		Non-		Railroaded	
Material Name	Roll Width	RailRoad Option	Splice/Seam	MAX WIDTH	MAX HEIGHT	MAX WIDTH	MAX HEIGHT	MAX WIDTH	MAX HEIGHT	MAX WIDTH	MAX HEIGHT	MAX WIDTH	MAX HEIGHT	MAX WIDTH	MAX HEIGHT
1% E Screen	122"	YES	YES	84"	84"	84"	84"	84"	84"	84"	84"	84"	84"	84"	84"
1% Sheerweave 2500	126"	YES	YES	84"	84"	84"	84"	84"	84"	84"	84"	84"	84"	84"	84"
1% Sheerweave 2701	126"	YES	YES	84"	84"	84"	84"	84"	84"	84"	84"	84"	84"	84"	84"
1% Sheerweave 5000	98"	NO	NO	84"	84"	N/A	N/A	84"	84"	N/A	N/A	84"	84"	N/A	N/A
1% Toka	118"	YES	YES	84"	84"	84"	84"	84"	84"	84"	84"	84"	84"	84"	84"
3% E Screen	122"	YES	YES	84"	84"	84"	84"	84"	84"	84"	84"	84"	84"	84"	84"
3% M Screen	122"	YES	YES	84"	84"	84"	84"	84"	84"	84"	84"	84"	84"	84"	84"
3% Sheerweave 2410	126"	YES	YES	84"	84"	84"	84"	84"	84"	84"	84"	84"	84"	84"	84"
3% Sheerweave 4400	126"	YES	YES	84"	84"	84"	84"	84"	84"	84"	84"	84"	84"	84"	84"
3% Sheerweave 5000	98"	NO	NO	84"	84"	N/A	N/A	84"	84"	N/A	N/A	84"	84"	N/A	N/A
3% T Screen	98"	YES	NO	84"	84"	84"	84"	84"	84"	84"	84"	84"	84"	84"	84"
4% S Screen	122"	NO	NO	84"	84"	N/A	N/A	84"	84"	N/A	N/A	84"	84"	N/A	N/A
4% Silver Screen	94"	YES	YES	84"	84"	84"	84"	84"	84"	84"	84"	84"	84"	84"	84"
5% E Screen	122"	YES	YES	84"	84"	84"	84"	84"	84"	84"	84"	84"	84"	84"	84"
5% M Screen Deco	98"	YES	YES	84"	84"	84"	84"	84"	84"	84"	84"	84"	84"	84"	84"
5% Sheerweave 2390	126"	YES	YES	84"	84"	84"	84"	84"	84"	84"	84"	84"	84"	84"	84"
5% Sheerweave 4000	126"	YES	YES	84"	84"	84"	84"	84"	84"	84"	84"	84"	84"	84"	84"
5% Sheerweave 5000	98"	NO	NO	84"	84"	N/A	N/A	84"	84"	N/A	N/A	84"	84"	N/A	N/A
7% Global Screen	118"	YES	YES	84"	84"	84"	84"	84"	84"	84"	84"	84"	84"	84"	84"
7% Sheerweave 5000 *(R1008)*	98"	NO	NO	84"	84"	N/A	N/A	84"	84"	N/A	N/A	84"	84"	N/A	N/A
7% Sheerweave 5000 *(R3408 & R3409)*	98"	NO	NO	84"	84"	N/A	N/A	84"	84"	N/A	N/A	84"	84"	N/A	N/A
10% E Screen	122"	YES	YES	84"	84"	84"	84"	84"	84"	84"	84"	84"	84"	84"	84"
10% Sheerweave 5000	98"	NO	NO	84"	84"	N/A	N/A	84"	84"	N/A	N/A	84"	84"	N/A	N/A
Alexandria	78"	NO	NO	78"	84"	N/A	N/A	68"	84"	N/A	N/A	68"	84"	N/A	N/A
Astaire	94"	NO	NO	84"	84"	N/A	N/A	N/A	N/A	N/A	N/A	N/A	N/A	N/A	N/A
Avila R Blackout	118"	YES	YES	84"	84"	84"	84"	84"	84"	84"	84"	84"	84"	84"	84"
Baroque	78"	NO	NO	78"	84"	N/A	N/A	68"	84"	N/A	N/A	68"	84"	N/A	N/A
Blackout - Solid	72"	YES	YES	72"	84"	84"	84"	62"	84"	84"	84"	N/A	N/A	N/A	N/A
Brilliance	118"	NO	NO	84"	84"	N/A	N/A	84"	84"	N/A	N/A	84"	84"	N/A	N/A
Brilliance Blackout	118"	NO	NO	84"	84"	N/A	N/A	84"	84"	N/A	N/A	84"	84"	N/A	N/A
Cararra	110"	NO	NO	84"	84"	N/A	N/A	84"	84"	N/A	N/A	84"	84"	N/A	N/A
Cararra Blackout	110"	NO	NO	84"	84"	N/A	N/A	84"	84"	N/A	N/A	84"	84"	N/A	N/A
Claudio	110"	NO	NO	84"	84"	N/A	N/A	84"	84"	N/A	N/A	84"	84"	N/A	N/A
Claudio Blackout	110"	NO	NO	84"	84"	N/A	N/A	84"	84"	N/A	N/A	84"	84"	N/A	N/A
Cusco	110"	YES	YES	84"	84"	84"	84"	84"	84"	84"	84"	84"	84"	84"	84"
Darien	90"	NO	NO	84"	84"	N/A	N/A	80"	84"	N/A	N/A	80"	84"	N/A	N/A
Drizzle	78"	YES	YES	78"	84"	84"	84"	68"	84"	84"	84"	68"	84"	84"	84"
Fiona	78"	NO	NO	78"	84"	N/A	N/A	68"	84"	N/A	N/A	68"	84"	N/A	N/A
Flocke Blackout	94"	YES	YES	84"	84"	84"	84"	84"	84"	84"	84"	84"	84"	84"	84"
Hayworth	98"	YES	YES	84"	84"	84"	84"	84"	84"	84"	84	84"	84"	84"	84
Illusion	72"	YES	NO	72"	84"	84"	60"	62"	84"	84"	60"	62"	84"	84"	60"
Jasper	110"	YES	YES	84"	84"	84"	84"	84"	84"	84"	84"	84"	84"	84"	84"
Linview	94"	YES	YES	84"	84"	84"	84"	84"	84"	84"	84"	84"	84"	84"	84"
Linview Blackout	94"	NO	NO	84"	84"	N/A	N/A	84"	84"	N/A	N/A	84"	84"	N/A	N/A
Montero	94"	NO	NO	84"	84"	N/A	N/A	84"	84"	N/A	N/A	84"	84"	N/A	N/A
Moravia	96"	NO	NO	84"	84"	N/A	N/A	84"	84"	N/A	N/A	84"	84"	N/A	N/A
Santa Cruz	94"	NO	NO	84"	84"	N/A	N/A	84"	84"	N/A	N/A	84"	84"	N/A	N/A
Santa Cruz Blackout	94"	NO	NO	84"	84"	N/A	N/A	84"	84"	N/A	N/A	84"	84"	N/A	N/A
Scala Blackout	110"	YES	YES	84"	84"	84"	84"	84"	84"	84"	84"	N/A	N/A	N/A	N/A
Sorrento	108"	NO	NO	84"	84"	N/A	N/A	84"	84"	N/A	N/A	84"	84"	N/A	N/A
Sunscreen 7000	118"	YES	YES	84"	84"	84"	84"	84"	84"	84"	84"	84"	84"	84"	84"
Uptown	78"	YES	NO	78"	84"	84"	66"	68"	84"	84"	66"	68"	84"	84"	66"
Uptown Room Darkening	78"	YES	NO	78"	66"	84"	66"	68"	84"	84"	66"	68"	84"	84"	66"
World Textures 1	78"	YES	YES	78"	84"	84"	84"	68"	84"	84"	84"	68"	84"	84"	84"
World Textures 1 Blackout	78"	YES	YES	78"	84"	84"	84"	68"	84"	84"	84"	68"	84"	84"	84"
World Textures 2	80"	YES	YES	80"	84"	84"	84"	70"	84"	84"	84"	70"	84"	84"	84"
World Textures 2 Blackout	80"	YES	YES	80"	84"	84"	84"	70"	84"	84"	84"	70"	84"	84"	84"

PRODUCT SIZE SPECIFICATIONS – TOUCHLIFT

Minimum shade width – 18" Minimum shade height – 24" Fabric Wrapped Bottomrail Shades over 42" will have 2 handles				Medium Cassette				Large Cassette			
				Non-Railroaded		Railroaded		Non-Railroaded		Railroaded	
Material Name	Roll Width	RailRoad Option	Splice/Seam	MAX WIDTH	MAX HEIGHT	MAX WIDTH	MAX HEIGHT	MAX WIDTH	MAX HEIGHT	MAX WIDTH	MAX HEIGHT
1% E Screen	122"	YES	YES	84"	84"	84"	84"	84"	84"	84"	84"
1% Sheerweave 2500	126"	YES	YES	84"	84"	84"	84"	84"	84"	84"	84"
1% Sheerweave 2701	126"	YES	YES	84"	84"	84"	84"	84"	84"	84"	84"
1% Sheerweave 5000	98"	NO	NO	84"	55"	N/A	N/A	84"	84"	N/A	N/A
1% Toka	118"	YES	YES	84"	84"	84"	84"	84"	84"	84"	84"
3% E Screen	122"	YES	YES	84"	84"	84"	84"	84"	84"	84"	84"
3% M Screen	122"	YES	YES	84"	84"	84"	84"	84"	84"	84"	84"
3% Sheerweave 2410	126"	YES	YES	84"	84"	84"	84"	84"	84"	84"	84"
3% Sheerweave 4400	126"	YES	YES	84"	81"	84"	84"	84"	84"	84"	84"
3% Sheerweave 5000	98"	NO	NO	84"	47"	N/A	N/A	84"	84"	N/A	N/A
3% T Screen	98"	YES	NO	84"	84"	84"	84"	84"	84"	84"	84"
4% S Screen	122"	NO	NO	84"	63"	N/A	N/A	84"	84"	N/A	N/A
4% Silver Screen	94"	YES	YES	84"	84"	84"	84"	84"	84"	84"	84"
5% E Screen	122"	YES	YES	84"	84"	84"	84"	84"	84"	84"	84"
5% M Screen Deco	98"	YES	YES	84"	84"	84"	84"	84"	84"	84"	84"
5% Sheerweave 2390	126"	YES	YES	84"	84"	84"	84"	84"	84"	84"	84"
5% Sheerweave 4000	126"	YES	YES	84"	84"	84"	84"	84"	84"	84"	84"
5% Sheerweave 5000	98"	NO	NO	84"	58"	N/A	N/A	84"	84"	N/A	N/A
7% Global Screen	118"	YES	YES	84"	84"	84"	84"	84"	84"	84"	84"
7% Sheerweave 5000 *(R1008)*	98"	NO	NO	84"	68"	N/A	N/A	84"	84"	N/A	N/A
7% Sheerweave 5000 *(R3408 & R3409)*	98"	NO	NO	84"	78"	N/A	N/A	84"	84"	N/A	N/A
10% E Screen	122"	YES	YES	84"	84"	84"	84"	84"	84"	84"	84"
10% Sheerweave 5000	98"	NO	NO	84"	58"	N/A	N/A	84"	84"	N/A	N/A
Alexandria	78"	NO	NO	78"	84"	N/A	N/A	78"	84"	N/A	N/A
Astaire	94"	NO	NO	84"	84"	N/A	N/A	84"	84"	N/A	N/A
Avila R Blackout	118"	YES	YES	84"	84"	84"	84"	84"	84"	84"	84"
Baroque	78"	NO	NO	78"	84"	N/A	N/A	78"	84"	N/A	N/A
Blackout - Solid	72"	YES	YES	72"	84"	84"	84"	72"	84"	84"	84"
Brilliance	118"	NO	NO	84"	84"	N/A	N/A	84"	84"	N/A	N/A
Brilliance Blackout	118"	NO	NO	84"	84"	N/A	N/A	84"	84"	N/A	N/A
Cararra	110"	NO	NO	84"	84"	N/A	N/A	84"	84"	N/A	N/A
Cararra Blackout	110"	NO	NO	84"	84"	N/A	N/A	84"	84"	N/A	N/A
Claudio	110"	NO	NO	84"	84"	N/A	N/A	84"	84"	N/A	N/A
Claudio Blackout	110"	NO	NO	84"	84"	N/A	N/A	84"	84"	N/A	N/A
Cusco	110"	YES	YES	84"	84"	84"	84"	84"	84"	84"	84"
Darien	90"	NO	NO	84"	84"	N/A	N/A	84"	84"	N/A	N/A
Drizzle	78"	YES	YES	78"	84"	84"	84"	78"	84"	84"	84"
Fiona	78"	NO	NO	78"	84"	N/A	N/A	78"	84"	N/A	N/A
Flocke Blackout	94"	YES	YES	84"	84"	84"	84"	84"	84"	84"	84"
Hayworth	98"	YES	YES	84"	84"	84"	84"	84"	84"	84"	84
Illusion	72"	YES	NO	72"	84"	84"	60"	72"	84"	84"	60"
Jasper	110"	YES	YES	84"	84"	84"	84"	84"	84"	84"	84"
Linview	94"	YES	YES	84"	84"	84"	84"	84"	84"	84"	84"
Linview Blackout	94"	NO	NO	84"	84"	N/A	N/A	84"	84"	N/A	N/A
Montero	94"	NO	NO	84"	84"	N/A	N/A	84"	84"	N/A	N/A
Moravia	96"	NO	NO	84"	84"	N/A	N/A	84"	84"	N/A	N/A
Santa Cruz	94"	NO	NO	84"	84"	N/A	N/A	84"	84"	N/A	N/A
Santa Cruz Blackout	94"	NO	NO	84"	84"	N/A	N/A	84"	84"	N/A	N/A
Scala Blackout	110"	YES	YES	84"	84"	84"	84"	84"	84"	84"	84"
Sorrento	108"	NO	NO	84"	84"	N/A	N/A	84"	84"	N/A	N/A
Sunscreen 7000	118"	YES	YES	84"	84"	84"	84"	84"	84"	84"	84"
Uptown	78"	YES	NO	78"	84"	84"	66"	78"	84"	84"	66"
Uptown Room Darkening	78"	YES	NO	78"	84"	84"	66"	78"	84"	84"	66"
World Textures 1	78"	YES	YES	78"	84"	84"	66"	78"	84"	84"	84"
World Textures 1 Blackout	78"	YES	YES	78"	84"	84"	66"	78"	84"	84"	84"
World Textures 2	80"	YES	YES	80"	84"	84"	68"	80"	84"	84"	84"
World Textures 2 Blackout	80"	YES	YES	80"	84"	84"	68"	80"	84"	84"	84"

PRODUCT SIZE SPECIFICATIONS – POWERWAND™

Minimum and Maximum Standards

Please Note: Shade sizes that are wider than the fabric roll width indicated will be made with the fabric turned width for length (railroaded). The maximum width for non-railroaded shades is the roll width unless otherwise noted.

Minimum:	Width	Height
PowerWand	19"	12"

Fabrics turned width for length will have a visible seam when fabricated longer than their maximum roll width less 10". Fabrics turned width for length may have an edge curl. This is not considered a defect in the product.

Material Name	Roll Width	Railroad Option	Splice/ Seam		PowerWand™ Shade Without Top Treament	PowerWand™ Shade with Deluxe Valance	PowerWand™ Shade with Fabric Valance	PowerWand™ Shade with Medium Cassette	PowerWand™ Shade with Large Cassette
1% E Screen	122"	YES	YES	Non-Railroaded					
				Maximum Width	102"	102"	102"	102"	102"
					Maximum Height				
				For Shade Widths to 66"	144"	144"	144"	138"	144"
				For Shade Widths to 72"	138"	138"	138"	138"	138"
				For Shade Widths to 84"	120"	120"	120"	120"	120"
				For Shade Widths to 90"	108"	108"	108"	108"	108"
				For Shade Widths to 96"	102"	102"	102"	102"	102"
				For Shade Widths to 102"	84"	84"	84"	84"	84"
				Railroaded					
				Maximum Width	102"	102"	102"	102"	102"
					Maximum Height				
				For Shade Widths to 66"	144"	144"	144"	138"	144"
				For Shade Widths to 72"	138"	138"	138"	138"	138"
				For Shade Widths to 84"	120"	120"	120"	120"	120"
				For Shade Widths to 90"	108"	108"	108"	108"	108"
				For Shade Widths to 96"	102"	102"	102"	102"	102"
				For Shade Widths to 102"	84"	84"	84"	84"	84"
1% Sheerweave 2500	126"	YES	YES	Non-Railroaded					
				Maximum Width	96"	96"	96"	96"	96"
					Maximum Height				
				For Shade Widths to 60"	126"	126"	126"	114"	126"
				For Shade Widths to 72"	102"	102"	102"	102"	102"
				For Shade Widths to 78"	90"	90"	90"	90"	90"
				For Shade Widths to 84"	84"	84"	84"	84"	84"
				For Shade Widths to 90"	78"	78"	78"	78"	78"
				For Shade Widths to 96"	72"	72"	72"	72"	72"
				Railroaded					
				Maximum Width	96"	96"	96"	96"	96"
					Maximum Height				
				For Shade Widths to 60"	126"	126"	126"	114"	126"
				For Shade Widths to 72"	102"	102"	102"	102"	102"
				For Shade Widths to 78"	90"	90"	90"	90"	90"
				For Shade Widths to 84"	84"	84"	84"	84"	84"
				For Shade Widths to 90"	78"	78"	78"	78"	78"
				For Shade Widths to 96"	72"	72"	72"	72"	72"
1% Sheerweave 2701	126"	YES	YES	Non-Railroaded					
				Maximum Width	96"	96"	96"	96"	96"
					Maximum Height				
				For Shade Widths to 60"	126"	126"	126"	126"	126"
				For Shade Widths to 72"	102"	102"	102"	102"	102"
				For Shade Widths to 78"	90"	90"	90"	90"	90"
				For Shade Widths to 84"	84"	84"	84"	84"	84"
				For Shade Widths to 90"	78"	78"	78"	78"	78"
				For Shade Widths to 96"	72"	72"	72"	72"	72"
				Railroaded					
				Maximum Width	96"	96"	96"	96"	96"
					Maximum Height				
				For Shade Widths to 60"	126"	126"	126"	126"	126"
				For Shade Widths to 72"	102"	102"	102"	102"	102"
				For Shade Widths to 78"	90"	90"	90"	90"	90"
				For Shade Widths to 84"	84"	84"	84"	84"	84"
				For Shade Widths to 90"	78"	78"	78"	78"	78"
				For Shade Widths to 96"	72"	72"	72"	72"	72"
1% Sheerweave 5000	98"	NO	NO	Non-Railroaded					
				Maximum Width	96"	90"	90"	96"	96"
					Maximum Height				
				For Shade Widths to 60"	126"	86"	86"	54"	86"
				For Shade Widths to 72"	102"	86"	86"	54"	86"
				For Shade Widths to 78"	90"	86"	86"	54"	86"
				For Shade Widths to 84"	84"	84"	84"	54"	84"
				For Shade Widths to 90"	78"	78"	78"	54"	78"
				For Shade Widths to 96"	72"	NA	NA	54"	72"

PRODUCT SIZE SPECIFICATIONS – POWERWAND™

Minimum and Maximum Standards
Please Note: Shade sizes that are wider than the fabric roll width indicated will be made with the fabric turned width for length (railroaded). The maximum width for non-railroaded shades is the roll width unless otherwise noted.

Minimum:	Width	Height
PowerWand	19"	12"

Fabrics turned width for length will have a visible seam when fabricated longer than their maximum roll width less 10". Fabrics turned width for length may have an edge curl. This is not considered a defect in the product.

Material Name	Roll Width	Railroad Option	Splice/ Seam		PowerWand™ Shade Without Top Treament	PowerWand™ Shade with Deluxe Valance	PowerWand™ Shade with Fabric Valance	PowerWand™ Shade with Medium Cassette	PowerWand™ Shade with Large Cassette
1% Toka	118"	YES	YES	Non-Railroaded					
				Maximum Width	96"	96"	96"	96"	96"
					Maximum Height				
				For Shade Widths to 60"	126"	126"	126"	96"	126"
				For Shade Widths to 72"	102"	102"	102"	96"	102"
				For Shade Widths to 78"	90"	90"	90"	90"	90"
				For Shade Widths to 84"	84"	84"	84"	84"	84"
				For Shade Widths to 90"	78"	78"	78"	78"	78"
				For Shade Widths to 96"	72"	72"	72"	72"	72"
				Railroaded					
				Maximum Width	96"	96"	96"	96"	96"
					Maximum Height				
				For Shade Widths to 60"	126"	126"	126"	96"	126"
				For Shade Widths to 72"	102"	102"	102"	96"	102"
				For Shade Widths to 78"	90"	90"	90"	90"	90"
				For Shade Widths to 84"	84"	84"	84"	84"	84"
				For Shade Widths to 90"	78"	78"	78"	78"	78"
				For Shade Widths to 96"	72"	72"	72"	72"	72"
3% E Screen	122"	YES	YES	Non-Railroaded					
				Maximum Width	102"	102"	102"	102"	102"
					Maximum Height				
				For Shade Widths to 66"	144"	144"	144"	144"	144"
				For Shade Widths to 72"	138"	138"	138"	138"	138"
				For Shade Widths to 84"	120"	120"	120"	120"	120"
				For Shade Widths to 90"	108"	108"	108"	108"	108"
				For Shade Widths to 96"	102"	102"	102"	102"	102"
				For Shade Widths to 102"	84"	84"	84"	84"	84"
				Railroaded					
				Maximum Width	102"	102"	102"	102"	102"
					Maximum Height				
				For Shade Widths to 66"	144"	144"	144"	144"	144"
				For Shade Widths to 72"	138"	138"	138"	138"	138"
				For Shade Widths to 84"	120"	120"	120"	120"	120"
				For Shade Widths to 90"	108"	108"	108"	108"	108"
				For Shade Widths to 96"	102"	102"	102"	102"	102"
				For Shade Widths to 102"	84"	84"	84"	84"	84"
3% M Screen	122"	YES	YES	Non-Railroaded					
				Maximum Width	102"	102"	102"	102"	102"
					Maximum Height				
				For Shade Widths to 66"	144"	144"	144"	144"	144"
				For Shade Widths to 72"	138"	138"	138"	138"	138"
				For Shade Widths to 84"	120"	120"	120"	120"	120"
				For Shade Widths to 90"	108"	108"	108"	108"	108"
				For Shade Widths to 96"	102"	102"	102"	102"	102"
				For Shade Widths to 102"	84"	84"	84"	84"	84"
				Railroaded					
				Maximum Width	102"	102"	102"	102"	102"
					Maximum Height				
				For Shade Widths to 66"	144"	144"	144"	144"	144"
				For Shade Widths to 72"	138"	138"	138"	138"	138"
				For Shade Widths to 84"	120"	120"	120"	120"	120"
				For Shade Widths to 90"	108"	108"	108"	108"	108"
				For Shade Widths to 96"	102"	102"	102"	102"	102"
				For Shade Widths to 102"	84"	84"	84"	84"	84"

PRODUCT SIZE SPECIFICATIONS – POWERWAND™

Minimum and Maximum Standards

Please Note: Shade sizes that are wider than the fabric roll width indicated will be made with the fabric turned width for length (railroaded). The maximum width for non-railroaded shades is the roll width unless otherwise noted.

Minimum:	Width	Height
PowerWand	19"	12"

Fabrics turned width for length will have a visible seam when fabricated longer than their maximum roll width less 10". Fabrics turned width for length may have an edge curl. This is not considered a defect in the product.

Material Name	Roll Width	Railroad Option	Splice/ Seam		PowerWand™ Shade Without Top Treament	PowerWand™ Shade with Deluxe Valance	PowerWand™ Shade with Fabric Valance	PowerWand™ Shade with Medium Cassette	PowerWand™ Shade with Large Cassette
3% Sheerweave 2410	126"	YES	YES	Non-Railroaded					
				Maximum Width	102"	102"	102"	102"	102"
					Maximum Height				
				For Shade Widths to 66"	108"	108"	108"	108"	108"
				For Shade Widths to 72"	102"	102"	102"	102"	102"
				For Shade Widths to 84"	84"	84"	84"	84"	84"
				For Shade Widths to 90"	78"	78"	78"	78"	78"
				For Shade Widths to 96"	72"	72"	72"	72"	72"
				For Shade Widths to 102"	60"	60"	60"	60"	60"
				Railroaded					
				Maximum Width	102"	102"	102"	102"	102"
					Maximum Height				
				For Shade Widths to 66"	108"	108"	108"	108"	108"
				For Shade Widths to 72"	102"	102"	102"	102"	102"
				For Shade Widths to 84"	84"	84"	84"	84"	84"
				For Shade Widths to 90"	78"	78"	78"	78"	78"
				For Shade Widths to 96"	72"	72"	72"	72"	72"
				For Shade Widths to 102"	60"	60"	60"	60"	60"
3% Sheerweave 4400	126"	YES	YES	Non-Railroaded					
				Maximum Width	96"	96"	96"	96"	96"
					Maximum Height				
				For Shade Widths to 60"	126"	120"	120"	78"	120"
				For Shade Widths to 72"	102"	102"	102"	78"	102"
				For Shade Widths to 78"	90"	90"	90"	78"	90"
				For Shade Widths to 84"	84"	84"	84"	78"	84"
				For Shade Widths to 90"	78"	78"	78"	78"	78"
				For Shade Widths to 96"	72"	72"	72"	72"	72"
				Railroaded					
				Maximum Width	96"	96"	96"	96"	96"
					Maximum Height				
				For Shade Widths to 60"	126"	120"	120"	78"	120"
				For Shade Widths to 72"	102"	102"	102"	78"	102"
				For Shade Widths to 78"	90"	90"	90"	78"	90"
				For Shade Widths to 84"	84"	84"	84"	78"	84"
				For Shade Widths to 90"	78"	78"	78"	78"	78"
				For Shade Widths to 96"	72"	72"	72"	72"	72"
3% Sheerweave 5000	98"	NO	NO	Non-Railroaded					
				Maximum Width	96"	88"	88"	96"	96"
					Maximum Height				
				For Shade Widths to 60"	126"	72"	72"	42"	72"
				For Shade Widths to 72"	102"	72"	72"	42"	72"
				For Shade Widths to 78"	90"	72"	72"	42"	72"
				For Shade Widths to 84"	84"	72"	72"	42"	72"
				For Shade Widths to 88"	78"	72"	72"	42"	72"
				For Shade Widths to 90"	78"	NA	NA	42"	72"
				For Shade Widths to 96"	72"	NA	NA	42"	72"
3% T Screen	98"	YES	NO	Non-Railroaded					
				Maximum Width	98"	88"	88"	98"	98"
					Maximum Height				
				For Shade Widths to 66"	144"	144"	144"	108"	144"
				For Shade Widths to 72"	138"	138"	138"	108"	138"
				For Shade Widths to 84"	120"	120"	120"	108"	120"
				For Shade Widths to 88"	108"	108"	108"	108"	108"
				For Shade Widths to 90"	108"	NA	NA	108"	108"
				For Shade Widths to 96"	102"	NA	NA	102"	102"
				For Shade Widths to 98"	84"	NA	NA	84"	84"
				Railroaded					
				Maximum Width	108"	108"	108"	108"	108"
					Maximum Height				
				For Shade Widths to 96"	86"	86"	86"	86"	86"
				For Shade Widths to 102"	84"	84"	84"	84"	84"
				For Shade Widths to 108"	66"	66"	66"	66"	66"

PRODUCT SIZE SPECIFICATIONS – POWERWAND™

Minimum and Maximum Standards

Please Note: Shade sizes that are wider than the fabric roll width indicated will be made with the fabric turned width for length (railroaded). The maximum width for non-railroaded shades is the roll width unless otherwise noted.

Minimum:	Width	Height
PowerWand	19"	12"

Fabrics turned width for length will have a visible seam when fabricated longer than their maximum roll width less 10". Fabrics turned width for length may have an edge curl. This is not considered a defect in the product.

Material Name	Roll Width	Railroad Option	Splice/ Seam		PowerWand™ Shade Without Top Treament	PowerWand™ Shade with Deluxe Valance	PowerWand™ Shade with Fabric Valance	PowerWand™ Shade with Medium Cassette	PowerWand™ Shade with Large Cassette
4% S Screen	122"	NO	NO	Non-Railroaded					
				Maximum Width	96"	96"	96"	96"	96"
					Maximum Height				
				For Shade Widths to 60"	126"	120"	120"	72"	120"
				For Shade Widths to 72"	102"	102"	102"	72"	102"
				For Shade Widths to 78"	90"	90"	90"	72"	90"
				For Shade Widths to 84"	84"	84"	84"	72"	84"
				For Shade Widths to 90"	78"	78"	78"	72"	78"
				For Shade Widths to 96"	72"	72"	72"	72"	72"
4% Silver Screen	94"	YES	YES	Non-Railroaded					
				Maximum Width	94"	84"	84"	94"	94"
					Maximum Height				
				For Shade Widths to 66"	144"	144"	144"	144"	144"
				For Shade Widths to 72"	138"	138"	138"	138"	138"
				For Shade Widths to 84"	120"	120"	120"	120"	120"
				For Shade Widths to 90"	108"	NA	NA	108"	108"
				For Shade Widths to 94"	102"	NA	NA	102"	102"
				Railroaded					
				Maximum Width	102"	102"	102"	102"	102"
					Maximum Height				
				For Shade Widths to 66"	144"	144"	144"	144"	144"
				For Shade Widths to 72"	138"	138"	138"	138"	138"
				For Shade Widths to 84"	120"	120"	120"	120"	120"
				For Shade Widths to 90"	108"	108"	108"	108"	108"
				For Shade Widths to 94"	102"	102"	102"	102"	102"
				For Shade Widths to 102"	84"	84"	84"	84"	84"
5% E Screen	122"	YES	YES	Non-Railroaded					
				Maximum Width	102"	102"	102"	102"	102"
					Maximum Height				
				For Shade Widths to 66"	144"	144"	144"	144"	144"
				For Shade Widths to 72"	138"	138"	138"	138"	138"
				For Shade Widths to 84"	120"	120"	120"	120"	120"
				For Shade Widths to 90"	108"	108"	108"	108"	108"
				For Shade Widths to 96"	102"	102"	102"	102"	102"
				For Shade Widths to 102"	84"	84"	84"	84"	84"
				Railroaded					
				Maximum Width	102"	102"	102"	102"	102"
				For Shade Widths to 66"	144"	144"	144"	144"	144"
				For Shade Widths to 72"	138"	138"	138"	138"	138"
				For Shade Widths to 84"	120"	120"	120"	120"	120"
				For Shade Widths to 90"	108"	108"	108"	108"	108"
				For Shade Widths to 96"	102"	102"	102"	102"	102"
				For Shade Widths to 102"	84"	84"	84"	84"	84"
5% M Screen Deco	98"	YES	YES	Non-Railroaded					
				Maximum Width	96"	88"	88"	96"	96"
					Maximum Height				
				For Shade Widths to 66"	144"	144"	144"	120"	144"
				For Shade Widths to 72"	138"	138"	138"	120"	138"
				For Shade Widths to 84"	120"	120"	120"	120"	120"
				For Shade Widths to 88"	108"	108"	108"	108"	108"
				For Shade Widths to 90"	108"	NA	NA	108"	108"
				For Shade Widths to 96"	102"	NA	NA	102"	102"
				Railroaded					
				Maximum Width	102"	102"	102"	102"	102"
					Maximum Height				
				For Shade Widths to 66"	144"	144"	144"	120"	144"
				For Shade Widths to 72"	138"	138"	138"	120"	138"
				For Shade Widths to 84"	120"	120"	120"	120"	120"
				For Shade Widths to 90"	108"	108"	108"	108"	108"
				For Shade Widths to 96"	102"	102"	102"	102"	102"
				For Shade Widths to 102"	84"	84"	84"	84"	84"

PRODUCT SIZE SPECIFICATIONS – POWERWAND™

Minimum and Maximum Standards

Please Note: Shade sizes that are wider than the fabric roll width indicated will be made with the fabric turned width for length (railroaded). The maximum width for non-railroaded shades is the roll width unless otherwise noted.

Minimum:	Width	Height
PowerWand	19"	12"

Fabrics turned width for length will have a visible seam when fabricated longer than their maximum roll width less 10". Fabrics turned width for length may have an edge curl. This is not considered a defect in the product.

Material Name	Roll Width	Railroad Option	Splice/ Seam		PowerWand™ Shade Without Top Treament	PowerWand™ Shade with Deluxe Valance	PowerWand™ Shade with Fabric Valance	PowerWand™ Shade with Medium Cassette	PowerWand™ Shade with Large Cassette
5% Sheerweave 2390	126"	YES	YES	Non-Railroaded					
				Maximum Width	102"	102"	102"	102"	102"
					Maximum Height				
				For Shade Widths to 66"	144"	144"	144"	144"	144"
				For Shade Widths to 72"	138"	138"	138"	138"	138"
				For Shade Widths to 84"	120"	120"	120"	120"	120"
				For Shade Widths to 90"	108"	108"	108"	108"	108"
				For Shade Widths to 96"	102"	102"	102"	102"	102"
				For Shade Widths to 102"	84"	84"	84"	84"	84"
				Railroaded					
				Maximum Width	102"	102"	102"	102"	102"
					Maximum Height				
				For Shade Widths to 66"	144"	144"	144"	144"	144"
				For Shade Widths to 72"	138"	138"	138"	138"	138"
				For Shade Widths to 84"	120"	120"	120"	120"	120"
				For Shade Widths to 90"	108"	108"	108"	108"	108"
				For Shade Widths to 96"	102"	102"	102"	102"	102"
				For Shade Widths to 102"	84"	84"	84"	84"	84"
5% Sheerweave 4000	126"	YES	YES	Non-Railroaded					
				Maximum Width	96"	96"	96"	96"	96"
					Maximum Height				
				For Shade Widths to 60"	126"	114"	114"	72"	114"
				For Shade Widths to 66"	108"	108"	108"	72"	108"
				For Shade Widths to 72"	102"	102"	102"	72"	102"
				For Shade Widths to 78"	90"	90"	90"	72"	90"
				For Shade Widths to 84"	84"	84"	84"	72"	84"
				For Shade Widths to 90"	78"	78"	78"	72"	78"
				For Shade Widths to 96"	72"	72"	72"	72"	72"
				Railroaded					
				Maximum Width	96"	96"	96"	96"	96"
					Maximum Height				
				For Shade Widths to 60"	126"	114"	114"	72"	114"
				For Shade Widths to 66"	108"	108"	108"	72"	108"
				For Shade Widths to 72"	102"	102"	102"	72"	102"
				For Shade Widths to 78"	90"	90"	90"	72"	90"
				For Shade Widths to 84"	84"	84"	84"	72"	84"
				For Shade Widths to 90"	78"	78"	78"	72"	78"
				For Shade Widths to 96"	72"	72"	72"	72"	72"
5% Sheerweave 5000	98"	NO	NO	Non-Railroaded					
				Maximum Width	98"	88"	88"	98"	98"
					Maximum Height				
				For Shade Widths to 60"	126"	90"	90"	54"	90"
				For Shade Widths to 66"	108"	90"	90"	54"	90"
				For Shade Widths to 72"	102"	90"	90"	54"	90"
				For Shade Widths to 84"	84"	84"	84"	54"	84"
				For Shade Widths to 88"	78"	78"	78"	54"	78"
				For Shade Widths to 90"	78"	NA	NA	54"	78"
				For Shade Widths to 98"	60"	NA	NA	54"	60"
7% Global Screen	118"	YES	YES	Non-Railroaded					
				Maximum Width	108"	108"	108"	108"	108"
					Maximum Height				
				For Shade Widths to 66"	144"	144"	144"	126"	144"
				For Shade Widths to 72"	138"	138"	138"	126"	138"
				For Shade Widths to 78"	126"	126"	126"	126"	126"
				For Shade Widths to 84"	120"	120"	120"	120"	120"
				For Shade Widths to 90"	108"	108"	108"	108"	108"
				For Shade Widths to 96"	102"	102"	102"	102"	102"
				For Shade Widths to 102"	84"	84"	84"	84"	84"
				For Shade Widths to 108"	66"	66"	66"	66"	66"
				Railroaded					
				Maximum Width	108"	108"	108"	108"	108"
					Maximum Height				
				For Shade Widths to 66"	144"	144"	144"	126"	144"
				For Shade Widths to 72"	138"	138"	138"	126"	138"
				For Shade Widths to 78"	126"	126"	126"	126"	126"
				For Shade Widths to 84"	120"	120"	120"	120"	120"
				For Shade Widths to 90"	108"	108"	108"	108"	108"
				For Shade Widths to 96"	102"	102"	102"	102"	102"
				For Shade Widths to 102"	84"	84"	84"	84"	84"
				For Shade Widths to 108"	66"	66"	66"	66"	66"

PRODUCT SIZE SPECIFICATIONS – POWERWAND™

Minimum and Maximum Standards
Please Note: Shade sizes that are wider than the fabric roll width indicated will be made with the fabric turned width for length (railroaded). The maximum width for non-railroaded shades is the roll width unless otherwise noted.

Minimum:	Width	Height
PowerWand	19"	12"

Fabrics turned width for length will have a visible seam when fabricated longer than their maximum roll width less 10". Fabrics turned width for length may have an edge curl. This is not considered a defect in the product.

Material Name	Roll Width	Railroad Option	Splice/ Seam		PowerWand™ Shade Without Top Treament	PowerWand™ Shade with Deluxe Valance	PowerWand™ Shade with Fabric Valance	PowerWand™ Shade with Medium Cassette	PowerWand™ Shade with Large Cassette
7% Sheerweave 5000 *(R1008)*	**98"**	**NO**	**NO**	**Non-Railroaded**					
				Maximum Width	**96"**	**88"**	**88"**	**96"**	**96"**
					Maximum Height				
				For Shade Widths to 60"	126"	102"	102"	66"	102"
				For Shade Widths to 66"	108"	102"	102"	66"	102"
				For Shade Widths to 72"	102"	102"	102"	66"	102"
				For Shade Widths to 84"	84"	84"	84"	66"	84"
				For Shade Widths to 88"	78"	78"	78"	66"	78"
				For Shade Widths to 90"	78"	NA	NA	66"	78"
				For Shade Widths to 96"	72"	NA	NA	66"	72"
7% Sheerweave 5000 *(R3408 & R3409)*	**98"**	**NO**	**NO**	**Non-Railroaded**					
				Maximum Width	**96"**	**88"**	**88"**	**96"**	**96"**
					Maximum Height				
				For Shade Widths to 60"	126"	126"	126"	78"	126"
				For Shade Widths to 66"	108"	108"	108"	78"	108"
				For Shade Widths to 72"	102"	102"	102"	78"	102"
				For Shade Widths to 84"	84"	84"	84"	78"	84"
				For Shade Widths to 88"	78"	78"	78"	78"	78"
				For Shade Widths to 90"	78"	NA	NA	78"	78"
				For Shade Widths to 96"	72"	NA	NA	72"	72"
10% E Screen	**122"**	**YES**	**YES**	**Non-Railroaded**					
				Maximum Width	**102"**	**102"**	**102"**	**102"**	**102"**
					Maximum Height				
				For Shade Widths to 66"	144"	144"	144"	138"	144"
				For Shade Widths to 72"	138"	138"	138"	138"	138"
				For Shade Widths to 84"	120"	120"	120"	120"	120"
				For Shade Widths to 90"	108"	108"	108"	108"	108"
				For Shade Widths to 96"	102"	102"	102"	102"	102"
				For Shade Widths to 102"	84"	84"	84"	84"	84"
				Railroaded					
				Maximum Width	**102"**	**102"**	**102"**	**102"**	**102"**
					Maximum Height				
				For Shade Widths to 66"	144"	144"	144"	138"	144"
				For Shade Widths to 72"	138"	138"	138"	138"	138"
				For Shade Widths to 84"	120"	120"	120"	120"	120"
				For Shade Widths to 90"	108"	108"	108"	108"	108"
				For Shade Widths to 96"	102"	102"	102"	102"	102"
				For Shade Widths to 102"	84"	84"	84"	84"	84"
10% Sheerweave 5000	**98"**	**NO**	**NO**	**Non-Railroaded**					
				Maximum Width	**98"**	**88"**	**88"**	**98"**	**98"**
					Maximum Height				
				For Shade Widths to 60"	126"	90"	90"	54"	90"
				For Shade Widths to 66"	108"	90"	90"	54"	90"
				For Shade Widths to 72"	102"	90"	90"	54"	90"
				For Shade Widths to 84"	84"	84"	84"	54"	84"
				For Shade Widths to 88"	78"	78"	78"	54"	78"
				For Shade Widths to 90"	78"	NA	NA	54"	78"
				For Shade Widths to 98"	60"	NA	NA	54"	60"

PRODUCT SIZE SPECIFICATIONS – POWERWAND™

Minimum and Maximum Standards

Please Note: Shade sizes that are wider than the fabric roll width indicated will be made with the fabric turned width for length (railroaded). The maximum width for non-railroaded shades is the roll width unless otherwise noted.

Minimum:	Width	Height
PowerWand	19"	12"

Fabrics turned width for length will have a visible seam when fabricated longer than their maximum roll width less 10". Fabrics turned width for length may have an edge curl. This is not considered a defect in the product.

Material Name	Roll Width	Railroad Option	Splice/ Seam		PowerWand™ Shade Without Top Treament	PowerWand™ Shade with Deluxe Valance	PowerWand™ Shade with Fabric Valance	PowerWand™ Shade with Medium Cassette	PowerWand™ Shade with Large Cassette
Alexandria	78"	NO	NO	**Non-Railroaded**					
				Maximum Width	78"	66"	66"	78"	78"
					Maximum Height				
				For Shade Widths to 66"	144"	144"	144"	144"	144"
				For Shade Widths to 78"	144"	NA	NA	144"	144"
Astaire	94"	NO	NO	**Non-Railroaded**					
				Maximum Width	94"	NA	NA	94"	94"
					Maximum Height				
				For Shade Widths to 94"	144"	NA	NA	72"	120"
Avila R Blackout	118"	YES	YES	**Non-Railroaded**					
				Maximum Width	102"	102"	102"	102"	102"
					Maximum Height				
				For Shade Widths to 66"	144"	144"	144"	144"	144"
				For Shade Widths to 72"	138"	138"	138"	138"	138"
				For Shade Widths to 84"	120"	120"	120"	120"	120"
				For Shade Widths to 90"	108"	108"	108"	108"	108"
				For Shade Widths to 96"	102"	102"	102"	102"	102"
				For Shade Widths to 102"	84"	84"	84"	84"	84"
				Railroaded					
				Maximum Width	102"	102"	102"	102"	102"
					Maximum Height				
				For Shade Widths to 84"	120"	120"	120"	120"	120"
				For Shade Widths to 90"	108"	108"	108"	108"	108"
				For Shade Widths to 96"	102"	102"	102"	102"	102"
				For Shade Widths to 102"	84"	84"	84"	84"	84"
Baroque	78"	NO	NO	**Non-Railroaded**					
				Maximum Width	78"	66"	66"	78"	78"
					Maximum Height				
				For Shade Widths to 66"	144"	144"	144"	144"	144"
				For Shade Widths to 72"	138"	NA	NA	138"	138"
				For Shade Widths to 78"	126"	NA	NA	126"	126"
Blackout - Solid	72"	YES	YES	**Non-Railroaded**					
				Maximum Width	72"	60"	N/A	72"	72"
					Maximum Height				
				For Shade Widths to 60"	144"	144"	N/A	144"	144"
				For Shade Widths to 66"	144"	NA	NA	144"	144"
				For Shade Widths to 72"	138"	NA	NA	138"	138"
				Railroaded					
				Maximum Width	108"	108"	N/A	108"	108"
					Maximum Height				
				For Shade Widths to 66"	144"	144"	N/A	144"	144"
				For Shade Widths to 72"	138"	138"	N/A	138"	138"
				For Shade Widths to 84"	120"	120"	N/A	120"	120"
				For Shade Widths to 90"	108"	108"	N/A	108"	108"
				For Shade Widths to 96"	102"	102"	N/A	102"	102"
				For Shade Widths to 102"	84"	84"	N/A	84"	84"
				For Shade Widths to 108"	66"	66"	N/A	66"	66"
Brilliance	118"	NO	NO	**Non-Railroaded**					
				Maximum Width	114"	108"	108"	114"	114"
					Maximum Height				
				For Shade Widths to 102"	144"	144"	144"	144"	144"
				For Shade Widths to 108"	108"	108"	108"	108"	108"
				For Shade Widths to 114"	84"	NA	NA	84"	84"

PRODUCT SIZE SPECIFICATIONS – POWERWAND™

Minimum and Maximum Standards

Please Note: Shade sizes that are wider than the fabric roll width indicated will be made with the fabric turned width for length (railroaded). The maximum width for non-railroaded shades is the roll width unless otherwise noted.

Minimum:	Width	Height
PowerWand	19"	12"

Fabrics turned width for length will have a visible seam when fabricated longer than their maximum roll width less 10". Fabrics turned width for length may have an edge curl. This is not considered a defect in the product.

Material Name	Roll Width	Railroad Option	Splice/ Seam		PowerWand™ Shade Without Top Treament	PowerWand™ Shade with Deluxe Valance	PowerWand™ Shade with Fabric Valance	PowerWand™ Shade with Medium Cassette	PowerWand™ Shade with Large Cassette
Brilliance Blackout	118"	NO	NO	Non-Railroaded					
				Maximum Width	102"	102"	102"	102"	102"
					Maximum Height				
				For Shade Widths to 66"	144"	144"	144"	114"	144"
				For Shade Widths to 72"	138"	138"	138"	114"	138"
				For Shade Widths to 84"	120"	120"	120"	114"	120"
				For Shade Widths to 90"	108"	108"	108"	108"	108"
				For Shade Widths to 96"	102"	102"	102"	102"	102"
				For Shade Widths to 102"	84"	84"	84"	84"	84"
Cararra	110"	NO	NO	Non-Railroaded					
				Maximum Width	110"	100"	100"	110"	110"
					Maximum Height				
				For Shade Widths to 100"	144"	144"	144"	144"	144"
				For Shade Widths to 102"	144"	NA	NA	144"	144"
				For Shade Widths to 108"	108"	NA	NA	108"	108"
				For Shade Widths to 110"	84"	NA	NA	84"	84"
Cararra Blackout	110"	NO	NO	Non-Railroaded					
				Maximum Width	96"	96"	96"	96"	96"
					Maximum Height				
				For Shade Widths to 60"	126"	126"	126"	96"	126"
				For Shade Widths to 72"	102"	102"	102"	96"	102"
				For Shade Widths to 78"	90"	90"	90"	90"	90"
				For Shade Widths to 84"	84"	84"	84"	84"	84"
				For Shade Widths to 90"	78"	78"	78"	78"	78"
				For Shade Widths to 96"	72"	72"	72"	72"	72"
Claudio	110"	NO	NO	Non-Railroaded					
				Maximum Width	110"	100"	100"	110"	110"
					Maximum Height				
				For Shade Widths to 100"	144"	144"	144"	144"	144"
				For Shade Widths to 102"	144"	NA	NA	144"	144"
				For Shade Widths to 110"	84"	NA	NA	84"	84"
Claudio Blackout	110"	NO	NO	Non-Railroaded					
				Maximum Width	102"	100"	100"	102"	102"
					Maximum Height				
				For Shade Widths to 66"	144"	144"	144"	114"	144"
				For Shade Widths to 72"	138"	138"	138"	114"	138"
				For Shade Widths to 78"	126"	126"	126"	114"	126"
				For Shade Widths to 84"	120"	120"	120"	114"	120"
				For Shade Widths to 90"	108"	108"	108"	108"	108"
				For Shade Widths to 96"	102"	102"	102"	102"	102"
				For Shade Widths to 100"	84"	84"	84"	84"	84"
				For Shade Widths to 102"	84"	NA	NA	84"	84"
Cusco	110"	YES	YES	Non-Railroaded					
				Maximum Width	102"	100"	100"	102"	102"
					Maximum Height				
				For Shade Widths to 66"	144"	144"	144"	130"	144"
				For Shade Widths to 72"	138"	138"	138"	130"	138"
				For Shade Widths to 84"	120"	120"	120"	120"	120"
				For Shade Widths to 90"	108"	108"	108"	108"	108"
				For Shade Widths to 96"	102"	102"	102"	102"	102"
				For Shade Widths to 100"	84"	84"	84"	84"	84"
				For Shade Widths to 102"	84"	NA	NA	84"	84"
				Railroaded					
				Maximum Width	102"	102"	102"	102"	102"
					Maximum Height				
				For Shade Widths to 66"	144"	144"	144"	130"	144"
				For Shade Widths to 72"	138"	138"	138"	130"	138"
				For Shade Widths to 84"	120"	120"	120"	120"	120"
				For Shade Widths to 90"	108"	108"	108"	108"	108"
				For Shade Widths to 96"	102"	102"	102"	102"	102"
				For Shade Widths to 102"	84"	84"	84"	84"	84"

PRODUCT SIZE SPECIFICATIONS – POWERWAND™

Minimum and Maximum Standards

Please Note: Shade sizes that are wider than the fabric roll width indicated will be made with the fabric turned width for length (railroaded). The maximum width for non-railroaded shades is the roll width unless otherwise noted.

Minimum:	Width	Height
PowerWand	19"	12"

Fabrics turned width for length will have a visible seam when fabricated longer than their maximum roll width less 10". Fabrics turned width for length may have an edge curl. This is not considered a defect in the product.

Material Name	Roll Width	Railroad Option	Splice/ Seam		PowerWand™ Shade Without Top Treament	PowerWand™ Shade with Deluxe Valance	PowerWand™ Shade with Fabric Valance	PowerWand™ Shade with Medium Cassette	PowerWand™ Shade with Large Cassette
Darien	90"	NO	NO	Non-Railroaded					
				Maximum Width	90"	80"	80"	90"	90"
					Maximum Height				
				For Shade Widths to 80"	144"	144"	144"	144"	144"
				For Shade Widths to 90"	144"	NA	NA	144"	144"
Drizzle	78"	YES	YES	Non-Railroaded					
				Maximum Width	78"	66"	66"	78"	78"
					Maximum Height				
				For Shade Widths to 66"	144"	144"	144"	144"	144"
				For Shade Widths to 78"	144"	NA	NA	144"	144"
				Railroaded					
				Maximum Width	114"	114"	114"	114"	114"
					Maximum Height				
				For Shade Widths to 102"	120"	120"	120"	120"	120"
				For Shade Widths to 108"	108"	108"	108"	108"	108"
				For Shade Widths to 114"	84"	84"	84"	84"	84"
Fiona	78"	NO	NO	Non-Railroaded					
				Maximum Width	78"	70"	70"	78"	78"
					Maximum Height				
				For Shade Widths to 66"	144"	144"	144"	144"	144"
				For Shade Widths to 70"	138"	138"	138"	138"	138"
				For Shade Widths to 72"	138"	NA	NA	138"	138"
				For Shade Widths to 78"	126"	NA	NA	126"	126"
Flocke Blackout	94"	YES	YES	Non-Railroaded					
				Maximum Width	94"	84"	84"	94"	94"
					Maximum Height				
				For Shade Widths to 66"	108"	108"	108"	108"	108"
				For Shade Widths to 72"	102"	102"	102"	102"	102"
				For Shade Widths to 84"	84"	84"	84"	84"	84"
				For Shade Widths to 90"	78"	NA	NA	78"	78"
				For Shade Widths to 94"	72"	NA	NA	72"	72"
				Railroaded					
				Maximum Width	102"	102"	102"	102"	102"
					Maximum Height				
				For Shade Widths to 66"	108"	108"	108"	108"	108"
				For Shade Widths to 72"	102"	102"	102"	102"	102"
				For Shade Widths to 84"	84"	84"	84"	84"	84"
				For Shade Widths to 90"	78"	78"	78"	78"	78"
				For Shade Widths to 96"	72"	72"	72"	72"	72"
				For Shade Widths to 102"	60"	60"	60"	60"	60"
Hayworth	94"	YES	YES	Non-Railroaded					
				Maximum Width	94"	84"	84"	94"	94"
					Maximum Height				
				For Shade Widths to 84"	144"	144"	144"	144"	144"
				For Shade Widths to 94"	144"	NA	NA	144"	144"
				Railroaded					
				Maximum Width	114"	114"	114"	114"	114"
					Maximum Height				
				For Shade Widths to 102"	144"	144"	144"	144"	144"
				For Shade Widths to 108"	108"	108"	108"	108"	108"
				For Shade Widths to 114"	84"	84"	84"	84"	84"
Illusion	72"	YES	NO	Non-Railroaded					
				Maximum Width	72"	60"	60"	72"	72"
					Maximum Height				
				For Shade Widths to 60"	144"	144"	144"	144"	144"
				For Shade Widths to 72"	144"	NA	NA	144"	144"
				Railroaded					
				Maximum Width	114"	114"	114"	114"	114"
					Maximum Height				
				For Shade Widths to 114"	60"	60"	60"	60"	60"

PRODUCT SIZE SPECIFICATIONS – POWERWAND™

Minimum and Maximum Standards

Please Note: Shade sizes that are wider than the fabric roll width indicated will be made with the fabric turned width for length (railroaded). The maximum width for non-railroaded shades is the roll width unless otherwise noted.

Minimum:	Width	Height
PowerWand	19"	12"

Fabrics turned width for length will have a visible seam when fabricated longer than their maximum roll width less 10". Fabrics turned width for length may have an edge curl. This is not considered a defect in the product.

Material Name	Roll Width	Railroad Option	Splice/ Seam		PowerWand™ Shade Without Top Treament	PowerWand™ Shade with Deluxe Valance	PowerWand™ Shade with Fabric Valance	PowerWand™ Shade with Medium Cassette	PowerWand™ Shade with Large Cassette
Jasper	**110"**	**YES**	**YES**	**Non-Railroaded**					
				Maximum Width	**108"**	**100"**	**100"**	**108"**	**108"**
					Maximum Height				
				For Shade Widths to 66"	144"	144"	144"	144"	144"
				For Shade Widths to 72"	138"	138"	138"	138"	138"
				For Shade Widths to 84"	120"	120"	120"	120"	120"
				For Shade Widths to 90"	108"	108"	108"	108"	108"
				For Shade Widths to 96"	102"	102"	102"	102"	102"
				For Shade Widths to 100"	84"	84"	84"	84"	84"
				For Shade Widths to 102"	84"	NA	NA	84"	84"
				For Shade Widths to 108"	66"	NA	NA	66"	66"
				Railroaded					
				Maximum Width	**114"**	**114"**	**114"**	**114"**	**114"**
					Maximum Height				
				For Shade Widths to 66"	144"	144"	144"	144"	144"
				For Shade Widths to 72"	138"	138"	138"	138"	138"
				For Shade Widths to 84"	120"	120"	120"	120"	120"
				For Shade Widths to 90"	108"	108"	108"	108"	108"
				For Shade Widths to 96"	102"	102"	102"	102"	102"
				For Shade Widths to 102"	84"	84"	84"	84"	84"
				For Shade Widths to 108"	66"	66"	66"	66"	66"
				For Shade Widths to 114"	48"	48"	48"	48"	48"
Linview	**94"**	**YES**	**YES**	**Non-Railroaded**					
				Maximum Width	**94"**	**84"**	**84"**	**94"**	**94"**
					Maximum Height				
				For Shade Widths to 84"	144"	144"	144"	144"	144"
				For Shade Widths to 94"	144"	NA	NA	144"	144"
				Railroaded					
				Maximum Width	**102"**	**102"**	**102"**	**102"**	**102"**
					Maximum Height				
				For Shade Widths to 102"	120"	120"	120"	120"	120"
Linview Blackout	**94"**	**NO**	**NO**	**Non-Railroaded**					
				Maximum Width	**94"**	**84"**	**84"**	**94"**	**94"**
					Maximum Height				
				For Shade Widths to 66"	144"	144"	144"	144"	144"
				For Shade Widths to 72"	138"	138"	138"	138"	138"
				For Shade Widths to 84"	120"	120"	120"	120"	120"
				For Shade Widths to 90"	108"	NA	NA	108"	108"
				For Shade Widths to 94"	102"	NA	NA	102"	102"
Montero	**94"**	**NO**	**NO**	**Non-Railroaded**					
				Maximum Width	**94"**	**84"**	**84"**	**94"**	**94"**
					Maximum Height				
				For Shade Widths to 72"	138"	138"	138"	132"	138"
				For Shade Widths to 84"	120"	120"	120"	120"	120"
				For Shade Widths to 90"	108"	NA	NA	108"	108"
				For Shade Widths to 94"	102"	NA	NA	102"	102"
Moravia	**96"**	**NO**	**NO**	**Non-Railroaded**					
				Maximum Width	**96"**	**84"**	**84"**	**96"**	**96"**
					Maximum Height				
				For Shade Widths to 84"	144"	144"	144"	138"	144"
				For Shade Widths to 96"	144"	NA	NA	138"	144"
Santa Cruz	**94"**	**NO**	**NO**	**Non-Railroaded**					
				Maximum Width	**94"**	**84"**	**84"**	**94"**	**94"**
					Maximum Height				
				For Shade Widths to 72"	138"	138"	138"	138"	138"
				For Shade Widths to 84"	120"	120"	120"	120"	120"
				For Shade Widths to 90"	108"	NA	NA	108"	108"
				For Shade Widths to 94"	102"	NA	NA	102"	102"

PRODUCT SIZE SPECIFICATIONS – POWERWAND™

Minimum and Maximum Standards

Please Note: Shade sizes that are wider than the fabric roll width indicated will be made with the fabric turned width for length (railroaded). The maximum width for non-railroaded shades is the roll width unless otherwise noted.

Minimum:	Width	Height
PowerWand	19"	12"

Fabrics turned width for length will have a visible seam when fabricated longer than their maximum roll width less 10". Fabrics turned width for length may have an edge curl. This is not considered a defect in the product.

Material Name	Roll Width	Railroad Option	Splice/ Seam		PowerWand™ Shade Without Top Treament	PowerWand™ Shade with Deluxe Valance	PowerWand™ Shade with Fabric Valance	PowerWand™ Shade with Medium Cassette	PowerWand™ Shade with Large Cassette
Santa Cruz Blackout	94"	NO	NO	Non-Railroaded					
				Maximum Width	94"	84"	84"	94"	94"
					Maximum Height				
				For Shade Widths to 60"	126"	126"	126"	102"	126"
				For Shade Widths to 72"	102"	102"	102"	102"	102"
				For Shade Widths to 78"	90"	90"	90"	90"	90"
				For Shade Widths to 84"	84"	84"	84"	84"	84"
				For Shade Widths to 90"	78"	NA	NA	78"	78"
				For Shade Widths to 94"	72"	NA	NA	72"	72"
Scala Blackout	110"	YES	YES	Non-Railroaded					
				Maximum Width	102"	96"	N/A	102"	102"
					Maximum Height				
				For Shade Widths to 66"	144"	144"	N/A	144"	144"
				For Shade Widths to 72"	138"	138"	N/A	138"	138"
				For Shade Widths to 84"	120"	120"	N/A	120"	120"
				For Shade Widths to 90"	108"	108"	N/A	108"	108"
				For Shade Widths to 96"	102"	102"	N/A	102"	102"
				For Shade Widths to 102"	84"	NA	NA	84"	84"
				Railroaded					
				Maximum Width	102"	102"	N/A	102"	102"
					Maximum Height				
				For Shade Widths to 66"	144"	144"	N/A	144"	144"
				For Shade Widths to 72"	138"	138"	N/A	138"	138"
				For Shade Widths to 84"	120"	120"	N/A	120"	120"
				For Shade Widths to 90"	108"	108"	N/A	108"	108"
				For Shade Widths to 96"	102"	102"	N/A	102"	102"
				For Shade Widths to 102"	84"	84"	N/A	84"	84"
Sorrento	108"	NO	NO	Non-Railroaded					
				Maximum Width	108"	96"	96"	108"	108"
					Maximum Height				
				For Shade Widths to 96"	144"	144"	144"	108"	144"
				For Shade Widths to 102"	144"	NA	NA	108"	144"
				For Shade Widths to 108"	108"	NA	NA	108"	108"
Sunscreen 7000	118"	YES	YES	Non-Railroaded					
				Maximum Width	96"	96"	96"	96"	96"
					Maximum Height				
				For Shade Widths to 60"	126"	126"	126"	96"	126"
				For Shade Widths to 72"	102"	102"	102"	96"	102"
				For Shade Widths to 78"	90"	90"	90"	90"	90"
				For Shade Widths to 84"	84"	84"	84"	84"	84"
				For Shade Widths to 90"	78"	78"	78"	78"	78"
				For Shade Widths to 96"	72"	72"	72"	72"	72"
				Railroaded					
				Maximum Width	96"	96"	96"	96"	96"
					Maximum Height				
				For Shade Widths to 60"	126"	126"	126"	96"	126"
				For Shade Widths to 72"	102"	102"	102"	96"	102"
				For Shade Widths to 78"	90"	90"	90"	90"	90"
				For Shade Widths to 84"	84"	84"	84"	84"	84"
				For Shade Widths to 90"	78"	78"	78"	78"	78"
				For Shade Widths to 96"	72"	72"	72"	72"	72"
Uptown	78"	YES	NO	Non-Railroaded					
				Maximum Width	78"	66"	66"	78"	78"
					Maximum Height				
				For Shade Widths to 66"	144"	144"	144"	144"	144"
				For Shade Widths to 78"	144"	NA	NA	144"	144"
				Railroaded					
				Maximum Width	114"	114"	114"	114"	114"
					Maximum Height				
				For Shade Widths to 114"	66"	66"	66"	66"	66"

PRODUCT SIZE SPECIFICATIONS – POWERWAND™

Minimum and Maximum Standards

Please Note: Shade sizes that are wider than the fabric roll width indicated will be made with the fabric turned width for length (railroaded). The maximum width for non-railroaded shades is the roll width unless otherwise noted.

Minimum:	Width	Height
PowerWand	19"	12"

Fabrics turned width for length will have a visible seam when fabricated longer than their maximum roll width less 10". Fabrics turned width for length may have an edge curl. This is not considered a defect in the product.

Material Name	Roll Width	Railroad Option	Splice/ Seam		PowerWand™ Shade Without Top Treament	PowerWand™ Shade with Deluxe Valance	PowerWand™ Shade with Fabric Valance	PowerWand™ Shade with Medium Cassette	PowerWand™ Shade with Large Cassette
Uptown Room Darkening	78"	YES	NO	Non-Railroaded					
				Maximum Width	78"	66"	66"	78"	78"
					Maximum Height				
				For Shade Widths to 66"	144"	144"	144"	144"	144"
				For Shade Widths to 72"	138"	NA	NA	138"	138"
				For Shade Widths to 78"	126"	NA	NA	126"	126"
				Railroaded					
				Maximum Width	108"	108"	108"	108"	108"
					Maximum Height				
				For Shade Widths to 108"	66"	66"	66"	66"	66"
World Textures 1	78"	YES	YES	Non-Railroaded					
				Maximum Width	78"	66"	66"	78"	78"
					Maximum Height				
				For Shade Widths to 66"	144"	144"	144"	126"	144"
				For Shade Widths to 72"	138"	NA	NA	126"	138"
				For Shade Widths to 78"	126"	NA	NA	126"	126"
				Railroaded					
				Maximum Width	102"	102"	102"	102"	102"
					Maximum Height				
				For Shade Widths to 66"	144"	144"	144"	126"	144"
				For Shade Widths to 72"	138"	138"	138"	126"	138"
				For Shade Widths to 78"	126"	126"	126"	126"	126"
				For Shade Widths to 84"	120"	120"	120"	108"	120"
				For Shade Widths to 90"	108"	108"	108"	108"	108"
				For Shade Widths to 96"	102"	102"	102"	102"	102"
				For Shade Widths to 102"	84"	84"	84"	84"	84"
World Textures 1 Blackout	78"	YES	YES	Non-Railroaded					
				Maximum Width	78"	66"	66"	78"	78"
					Maximum Height				
				For Shade Widths to 66"	144"	138"	138"	108"	144"
				For Shade Widths to 72"	138"	NA	NA	108"	138"
				For Shade Widths to 78"	126"	NA	NA	108"	126"
				Railroaded					
				Maximum Width	102"	102"	102"	102"	102"
					Maximum Height				
				For Shade Widths to 66"	144"	144"	144"	108"	144"
				For Shade Widths to 72"	138"	138"	138"	108"	138"
				For Shade Widths to 78"	126"	126"	126"	108"	126"
				For Shade Widths to 84"	120"	120"	120"	108"	120"
				For Shade Widths to 90"	108"	108"	108"	108"	108"
				For Shade Widths to 96"	102"	102"	102"	102"	102"
				For Shade Widths to 102"	84"	84"	84"	84"	84"
World Textures 2	80"	YES	YES	Non-Railroaded					
				Maximum Width	80"	70"	70"	80"	80"
					Maximum Height				
				For Shade Widths to 70"	138"	138"	138"	84"	138"
				For Shade Widths to 72"	138"	NA	NA	84"	138"
				For Shade Widths to 80"	120"	NA	NA	84"	120"
				Railroaded					
				Maximum Width	102"	102"	102"	102"	102"
					Maximum Height				
				For Shade Widths to 66"	144"	138"	138"	84"	138"
				For Shade Widths to 72"	138"	138"	138"	84"	138"
				For Shade Widths to 84"	120"	120"	120"	84"	120"
				For Shade Widths to 90"	108"	108"	108"	84"	108"
				For Shade Widths to 96"	102"	102"	102"	84"	102"
				For Shade Widths to 102"	84"	84"	84"	84"	84"
World Textures 2 Blackout	80"	YES	YES	Non-Railroaded					
				Maximum Width	80"	70"	70"	80"	80"
					Maximum Height				
				For Shade Widths to 66"	144"	144"	144"	144"	144"
				For Shade Widths to 70"	138"	138"	138"	138"	138"
				For Shade Widths to 72"	138"	NA	NA	138"	138"
				For Shade Widths to 80"	120"	NA	NA	120"	120"
				Railroaded					
				Maximum Width	102"	102"	102"	102"	102"
					Maximum Height				
				For Shade Widths to 66"	144"	144"	144"	144"	144"
				For Shade Widths to 72"	138"	138"	138"	138"	138"
				For Shade Widths to 84"	120"	120"	120"	120"	120"
				For Shade Widths to 90"	108"	108"	108"	108"	108"
				For Shade Widths to 96"	102"	102"	102"	102"	102"
				For Shade Widths to 102"	84"	84"	84"	84"	84"

PRODUCT SIZE SPECIFICATIONS – SIMPLICITY

Minimum and Maximum Standards
Please Note: Shade sizes that are wider than the fabric roll width indicated will be made with the fabric turned width for length (railroaded). The maximum width for non-railroaded shades is the roll width unless otherwise noted.

Minimum:	Width	Height
Simplicity	19"	12"

Fabrics turned width for length will have a visible seam when fabricated longer than their maximum roll width less 10". Fabrics turned width for length may have an edge curl. This is not considered a defect in the product.

Material Name	Roll Width	Railroad Option	Splice/ Seam		Simplicity Motorized Shade Without Top Treament	Simplicity Motorized Shade with Deluxe Valance	Simplicity Motorized Shade with Fabric Valance	Simplicity Motorized Shade with Medium Cassette	Simplicity Motorized Shade with Large Cassette
1% E Screen	122"	YES	YES	Non-Railroaded					
				Maximum Width	108"	108"	108"	108"	108"
					Maximum Height				
				For Shade Widths to 84"	144"	144"	144"	138"	144"
				For Shade Widths to 90"	138"	138"	138"	138"	138"
				For Shade Widths to 96"	108"	108"	108"	108"	108"
				For Shade Widths to 102"	84"	84"	84"	84"	84"
				For Shade Widths over 102"	66"	66"	66"	66"	66"
				Railroaded					
				Maximum Width	108"	108"	108"	108"	108"
					Maximum Height				
				For Shade Widths to 84"	144"	144"	144"	138"	144"
				For Shade Widths to 90"	138"	138"	138"	138"	138"
				For Shade Widths to 96"	108"	108"	108"	108"	108"
				For Shade Widths to 102"	84"	84"	84"	84"	84"
				For Shade Widths over 102"	66"	66"	66"	66"	66"
1% Sheerweave 2500	126"	YES	YES	Non-Railroaded					
				Maximum Width	102"	102"	102"	102"	102"
					Maximum Height				
				Max Height: Width to 78"	144"	144"	144"	114"	144"
				Max Height: Width to 84"	126"	126"	126"	114"	126"
				Max Height: Width to 90"	96¨	96"	96"	96¨	96¨
				Max Height: Width to 96"	78¨	78"	78"	78¨	78¨
				For Shade Widths over 96"	60¨	60¨	60¨	60¨	60¨
				Railroaded					
				Maximum Width	102"	102"	102"	102"	102"
					Maximum Height				
				Max Height: Width to 78"	144"	144"	144"	114"	144"
				Max Height: Width to 84"	126"	126"	126"	114"	126"
				Max Height: Width to 90"	96¨	96"	96"	96¨	96¨
				Max Height: Width to 96"	78¨	78"	78"	78¨	78¨
				For Shade Widths over 96"	60¨	60¨	60¨	60¨	60¨
1% Sheerweave 2701	126"	YES	YES	Non-Railroaded					
				Maximum Width	102"	102"	102"	102"	102"
					Maximum Height				
				Max Height: Width to 72"	144"	144"	144"	138"	144"
				Max Height: Width to 84"	126"	126"	126"	126"	126"
				Max Height: Width to 90"	96"	96"	96"	96"	96"
				Max Height: Width to 96"	78"	78"	78"	78"	78"
				For Shade Widths over 96"	60"	60"	60"	60"	60"
				Railroaded					
				Maximum Width	102"	102"	102"	102"	102"
					Maximum Height				
				Max Height: Width to 72"	144"	144"	144"	138"	144"
				Max Height: Width to 84"	126"	126"	126"	126"	126"
				Max Height: Width to 90"	96"	96"	96"	96"	96"
				Max Height: Width to 96"	78"	78"	78"	78"	78"
				For Shade Widths over 96"	60"	60"	60"	60"	60"
1% Sheerweave 5000	98"	NO	NO	Non-Railroaded					
				Maximum Width	96"	86¨	86¨	96"	96"
					Maximum Height				
				For Shade Widths to 78"	144"	84"	84"	54"	84"
				For Shade Widths to 84"	126"	84"	84"	54"	84"
				For Shade Widths to 86"	96"	84"	84"	54"	84"
				For Shade Widths to 90"	96"	N/A	N/A	54"	84"
				For Shade Widths to 96"	78"	N/A	N/A	54"	78"

PRODUCT SIZE SPECIFICATIONS – SIMPLICITY

Minimum and Maximum Standards

Please Note: Shade sizes that are wider than the fabric roll width indicated will be made with the fabric turned width for length (railroaded). The maximum width for non-railroaded shades is the roll width unless otherwise noted.

Minimum:	Width	Height
Simplicity	19"	12"

Fabrics turned width for length will have a visible seam when fabricated longer than their maximum roll width less 10". Fabrics turned width for length may have an edge curl. This is not considered a defect in the product.

Material Name	Roll Width	Railroad Option	Splice/ Seam		Simplicity Motorized Shade Without Top Treament	Simplicity Motorized Shade with Deluxe Valance	Simplicity Motorized Shade with Fabric Valance	Simplicity Motorized Shade with Medium Cassette	Simplicity Motorized Shade with Large Cassette
1% Toka	118"	YES	YES	Non-Railroaded					
				Maximum Width	102"	102"	102"	102"	102"
					Maximum Height				
				Max Height: Width to 72"	144"	144"	144"	96"	144"
				Max Height: Width to 84"	126"	126"	126"	96"	126"
				Max Height: Width to 90"	96"	96"	96"	96"	96"
				Max Height: Width to 96"	78"	78"	78"	78"	78"
				For Shade Widths over 96"	60"	60"	60"	60"	60"
				Railroaded					
				Maximum Width	102"	102"	102"	102"	102"
					Maximum Height				
				Max Height: Width to 72"	144"	144"	144"	96"	144"
				Max Height: Width to 84"	126"	126"	126"	96"	126"
				Max Height: Width to 90"	96"	96"	96"	96"	96"
				Max Height: Width to 96"	78"	78"	78"	78"	78"
				For Shade Widths over 96"	60"	60"	60"	60"	60"
3% E Screen	122"	YES	YES	Non-Railroaded					
				108"	108"	108"	108"	108"	108"
					Maximum Height				
				For Shade Widths to 84"	144"	144"	144"	144"	144"
				For Shade Widths to 90"	138"	138"	138"	138"	138"
				For Shade Widths to 96"	108"	108"	108"	108"	108"
				For Shade Widths to 102"	84"	84"	84"	84"	84"
				For Shade Widths over 102"	66"	66"	66"	66"	66"
				Railroaded					
				Maximum Width	108"	108"	108"	108"	108"
					Maximum Height				
				For Shade Widths to 84"	144"	144"	144"	144"	144"
				For Shade Widths to 90"	138"	138"	138"	138"	138"
				For Shade Widths to 96"	108"	108"	108"	108"	108"
				For Shade Widths to 102"	84"	84"	84"	84"	84"
				For Shade Widths over 102"	66"	66"	66"	66"	66"
3% M Screen	122"	YES	YES	Non-Railroaded					
				Maximum Width	108"	108"	108"	108"	108"
					Maximum Height				
				For Shade Widths to 84"	144"	144"	144"	126"	144"
				For Shade Widths to 90"	138"	138"	138"	126"	138"
				For Shade Widths to 96"	108"	108"	108"	108"	108"
				For Shade Widths over 96"	66"	66"	66"	66"	66"
				Railroaded					
				Maximum Width	108"	108"	108"	108"	108"
					Maximum Height				
				For Shade Widths to 84"	144"	144"	144"	126"	144"
				For Shade Widths to 90"	138"	138"	138"	126"	138"
				For Shade Widths to 96"	108"	108"	108"	108"	108"
				For Shade Widths over 96"	66"	66"	66"	66"	66"
3% Sheerweave 2410	126"	YES	YES	Non-Railroaded					
				Maximum Width	102"	102"	102"	102"	102"
					Maximum Height				
				For Shade Widths to 72"	144"	144"	144"	138"	144"
				For Shade Widths to 84"	126"	126"	126"	126"	126"
				For Shade Widths to 90"	96"	96"	96"	96"	96"
				For Shade Widths to 96"	78"	78"	78"	78"	78"
				For Shade Widths over 96"	60"	60"	60"	60"	60"
				Railroaded					
				Maximum Width	102"	102"	102"	102"	102"
					Maximum Height				
				For Shade Widths to 72"	144"	144"	144"	138"	144"
				For Shade Widths to 84"	126"	126"	126"	126"	126"
				For Shade Widths to 90"	96"	96"	96"	96"	96"
				For Shade Widths to 96"	78"	78"	78"	78"	78"
				For Shade Widths over 96"	60"	60"	60"	60"	60"

PRODUCT SIZE SPECIFICATIONS – SIMPLICITY

Minimum and Maximum Standards

Please Note: Shade sizes that are wider than the fabric roll width indicated will be made with the fabric turned width for length (railroaded). The maximum width for non-railroaded shades is the roll width unless otherwise noted.

Minimum:	Width	Height
Simplicity	19"	12"

Fabrics turned width for length will have a visible seam when fabricated longer than their maximum roll width less 10". Fabrics turned width for length may have an edge curl. This is not considered a defect in the product.

Material Name	Roll Width	Railroad Option	Splice/ Seam		Simplicity Motorized Shade Without Top Treament	Simplicity Motorized Shade with Deluxe Valance	Simplicity Motorized Shade with Fabric Valance	Simplicity Motorized Shade with Medium Cassette	Simplicity Motorized Shade with Large Cassette
3% Sheerweave 4400	126"	YES	YES	Non-Railroaded					
				Maximum Width	102"	102"	102"	102"	102"
					Maximum Height				
				For Shade Widths to 78"	144"	120"	120"	78"	120"
				For Shade Widths to 84"	126"	120"	120"	78"	120"
				For Shade Widths to 90"	96"	96"	96"	78"	96"
				For Shade Widths to 96"	78"	78"	78"	78"	78"
				For Shade Widths over 96"	60"	60"	60"	60"	60"
				Railroaded					
				Maximum Width	102"	102"	102"	102"	102"
					Maximum Height				
				For Shade Widths to 78"	144"	120"	120"	78"	120"
				For Shade Widths to 84"	126"	120"	120"	78"	120"
				For Shade Widths to 90"	96"	96"	96"	78"	96"
				For Shade Widths to 96"	78"	78"	78"	78"	78"
				For Shade Widths over 96"	60"	60"	60"	60"	60"
3% Sheerweave 5000	98"	NO	NO	Non-Railroaded					
				Maximum Width	98"	86"	86"	98"	98"
					Maximum Height				
				For Shade Widths to 78"	144"	72"	72"	42"	72"
				For Shade Widths to 84"	126"	72"	72"	42"	72"
				For Shade Widths to 86"	96"	72"	72"	42"	72"
				For Shade Widths to 90"	96"	N/A	N/A	42"	72"
				For Shade Widths over 90"	60"	N/A	N/A	42"	60"
3% T Screen	98"	YES	NO	Non-Railroaded					
				Maximum Width	98"	90"	90"	98"	98"
					Maximum Height				
				For Shade Widths to 84"	144"	144"	144"	108"	144"
				For Shade Widths to 90"	138"	138"	138"	108"	138"
				For Shade Widths to 96"	108"	N/A	N/A	108"	108"
				For Shade Widths over 96"	84"	N/A	N/A	84"	84"
				Railroaded					
				Maximum Width	108"	108"	108"	108"	108"
					Maximum Height				
				For Shade Widths to 96"	86"	86"	86"	86"	86"
				For Shade Widths over 96"	66"	66"	66"	66"	66"
4% S Screen	122"	NO	NO	Non-Railroaded					
				Maximum Width	102"	102"	102"	102"	102"
					Maximum Height				
				For Shade Widths to 72"	144"	120"	120"	72"	120"
				For Shade Widths to 84"	126"	120"	120"	72"	120"
				For Shade Widths to 90"	96"	96"	96"	72"	96"
				For Shade Widths to 96"	78"	78"	78"	72"	78"
				For Shade Widths over 96"	60"	60"	60"	60"	60"
4% Silver Screen	94"	YES	YES	Non-Railroaded					
				Maximum Width	94"	84"	84"	94"	94"
					Maximum Height				
				For Shade Widths to 84"	144"	144"	144"	144"	144"
				For Shade Widths to 90"	138"	N/A	N/A	138"	138"
				For Shade Widths over 90"	108"	N/A	N/A	108"	108"
				Railroaded					
				Maximum Width	108"	108"	108"	108"	108"
					Maximum Height				
				For Shade Widths to 96"	108"	108"	108"	108"	108"
				For Shade Widths to 102"	84"	84"	84"	84"	84"
				For Shade Widths over 102"	66"	66"	66"	66"	66"

PRODUCT SIZE SPECIFICATIONS – SIMPLICITY

Minimum and Maximum Standards

Please Note: Shade sizes that are wider than the fabric roll width indicated will be made with the fabric turned width for length (railroaded). The maximum width for non-railroaded shades is the roll width unless otherwise noted.

Minimum:	Width	Height
Simplicity	19"	12"

Fabrics turned width for length will have a visible seam when fabricated longer than their maximum roll width less 10". Fabrics turned width for length may have an edge curl. This is not considered a defect in the product.

Material Name	Roll Width	Railroad Option	Splice/ Seam		Simplicity Motorized Shade Without Top Treament	Simplicity Motorized Shade with Deluxe Valance	Simplicity Motorized Shade with Fabric Valance	Simplicity Motorized Shade with Medium Cassette	Simplicity Motorized Shade with Large Cassette
5% E Screen	122"	YES	YES	Non-Railroaded					
				Maximum Width	102"	102"	102"	102"	102"
					Maximum Height				
				For Shade Widths to 84"	144"	144"	144"	144"	144"
				For Shade Widths to 90"	138"	138"	138"	138"	138"
				For Shade Widths to 96"	108"	108"	108"	108"	108"
				For Shade Widths to 102"	84"	84"	84"	84"	84"
				Railroaded					
				Maximum Width	102"	102"	102"	102"	102"
					Maximum Height				
				For Shade Widths to 84"	144"	144"	144"	144"	144"
				For Shade Widths to 90"	138"	138"	138"	138"	138"
				For Shade Widths to 96"	108"	108"	108"	108"	108"
				For Shade Widths to 102"	84"	84"	84"	84"	84"
5% M Screen Deco	98"	YES	YES	Non-Railroaded					
				Maximum Width	98"	90"	90"	98"	98"
					Maximum Height				
				For Shade Widths to 84"	144"	144"	144"	126"	144"
				For Shade Widths to 90"	138"	138"	138"	126"	138"
				For Shade Widths to 96"	108"	N/A	N/A	108"	108"
				For Shade Widths to 98"	84"	N/A	N/A	84"	84"
				Railroaded					
				Maximum Width	102"	102"	102"	102"	102"
					Maximum Height				
				For Shade Widths to 84"	144"	144"	144"	126"	144"
				For Shade Widths to 90"	138"	138"	138"	126"	138"
				For Shade Widths to 96"	108"	108"	108"	108"	108"
				For Shade Widths to 102"	84"	84"	84"	84"	84"
5% Sheerweave 2390	126"	YES	YES	Non-Railroaded					
				Maximum Width	102"	102"	102"	102"	102"
					Maximum Height				
				For Shade Widths to 84"	144"	144"	144"	144"	144"
				For Shade Widths to 90"	138"	138"	138"	138"	138"
				For Shade Widths to 96"	108"	108"	108"	108"	108"
				For Shade Widths to 102"	84"	84"	84"	84"	84"
				Railroaded					
				Maximum Width	102"	102"	102"	102"	102"
					Maximum Height				
				For Shade Widths to 84"	144"	144"	144"	144"	144"
				For Shade Widths to 90"	138"	138"	138"	138"	138"
				For Shade Widths to 96"	108"	108"	108"	108"	108"
				For Shade Widths to 102"	84"	84"	84"	84"	84"
5% Sheerweave 4000	126"	YES	YES	Non-Railroaded					
				Maximum Width	102"	102"	102"	102"	102"
					Maximum Height				
				For Shade Widths to 78"	144"	138"	138"	90"	138"
				For Shade Widths to 84"	126"	126"	126"	90"	126"
				For Shade Widths to 90"	96"	96"	96"	90"	96"
				For Shade Widths to 96"	78"	78"	78"	90"	78"
				For Shade Widths over 96"	60"	60"	60"	60"	60"
				Railroaded					
				Maximum Width	102"	102"	102"	102"	102"
					Maximum Height				
				For Shade Widths to 78"	144"	138"	138"	90"	138"
				For Shade Widths to 84"	126"	126"	126"	90"	126"
				For Shade Widths to 90"	96"	96"	96"	90"	96"
				For Shade Widths to 96"	78"	78"	78"	90"	78"
				For Shade Widths over 96"	60"	60"	60"	60"	60"

PRODUCT SIZE SPECIFICATIONS – SIMPLICITY

Minimum and Maximum Standards

Please Note: Shade sizes that are wider than the fabric roll width indicated will be made with the fabric turned width for length (railroaded). The maximum width for non-railroaded shades is the roll width unless otherwise noted.

Minimum:	Width	Height
Simplicity	19"	12"

Fabrics turned width for length will have a visible seam when fabricated longer than their maximum roll width less 10". Fabrics turned width for length may have an edge curl. This is not considered a defect in the product.

Material Name	Roll Width	Railroad Option	Splice/ Seam		Simplicity Motorized Shade Without Top Treament	Simplicity Motorized Shade with Deluxe Valance	Simplicity Motorized Shade with Fabric Valance	Simplicity Motorized Shade with Medium Cassette	Simplicity Motorized Shade with Large Cassette
5% Sheerweave 5000	98"	NO	NO	Non-Railroaded					
				Maximum Width	98"	86"	86"	98"	98"
					Maximum Height				
				For Shade Widths to 72"	144"	90"	90"	54"	90"
				For Shade Widths to 84"	126"	90"	90"	54"	90"
				For Shade Widths to 86"	96"	90"	90"	54"	90"
				For Shade Widths to 90"	96"	N/A	N/A	54"	90"
				For Shade Widths over 90"	60"	N/A	N/A	54"	66"
7% Global Screen	118"	YES	YES	Non-Railroaded					
				Maximum Width	108"	108"	108"	108"	108"
					Maximum Height				
				For Shade Widths to 84"	144"	144"	144"	120"	144"
				For Shade Widths to 90"	138"	138"	138"	120"	138"
				For Shade Widths to 96"	108"	108"	108"	108"	108"
				For Shade Widths to 102"	84"	84"	84"	84"	84"
				For Shade Widths to 108"	66"	66"	66"	66"	66"
				Railroaded					
				Maximum Width	108"	108"	108"	108"	108"
					Maximum Height				
				For Shade Widths to 84"	144"	144"	144"	120"	144"
				For Shade Widths to 90"	138"	138"	138"	120"	138"
				For Shade Widths to 96"	108"	108"	108"	108"	108"
				For Shade Widths to 102"	84"	84"	84"	84"	84"
				For Shade Widths to 108"	66"	66"	66"	66"	66"
7% Sheerweave 5000 *(R1008)*	98"	NO	NO	Non-Railroaded					
				Maximum Width	98"	86"	86"	98"	98"
					Maximum Height				
				For Shade Widths to 72"	144"	102"	102"	66"	102"
				For Shade Widths to 84"	126"	102"	102"	66"	102"
				For Shade Widths to 86"	96"	96"	96"	66"	96"
				For Shade Widths to 90"	96"	N/A	N/A	66"	96"
				For Shade Widths over 90"	60"	N/A	N/A	60"	60"
7% Sheerweave 5000 *(R3408 & R3409)*	98"	NO	NO	Non-Railroaded					
				Maximum Width	98"	88"	88"	98"	98"
					Maximum Height				
				For Shade Widths to 72"	144"	114"	114"	72"	114"
				For Shade Widths to 84"	126"	114"	114"	72"	114"
				For Shade Widths to 88"	96"	96"	96"	72"	96"
				For Shade Widths to 90"	96"	N/A	N/A	72"	96"
				For Shade Widths over 90"	60"	N/A	N/A	60"	60"
10% E Screen	122"	YES	YES	Non-Railroaded					
				Maximum Width	108"	108"	108"	108"	108"
					Maximum Height				
				For Shade Widths to 84"	144"	144"	144"	138"	144"
				For Shade Widths to 90"	138"	138"	138"	138"	138"
				For Shade Widths to 96"	108"	108"	108"	108"	108"
				For Shade Widths to 102"	84"	84"	84"	84"	84"
				For Shade Widths over 102"	66"	66"	66"	66"	66"
				Railroaded					
				Maximum Width	108"	108"	108"	108"	108"
					Maximum Height				
				For Shade Widths to 84"	144"	144"	144"	138"	144"
				For Shade Widths to 90"	138"	138"	138"	138"	138"
				For Shade Widths to 96"	108"	108"	108"	108"	108"
				For Shade Widths to 102"	84"	84"	84"	84"	84"
				For Shade Widths over 102"	66"	66"	66"	66"	66"
10% Sheerweave 5000	98"	NO	NO	Non-Railroaded					
				Maximum Width	98"	88"	88"	98"	98"
					Maximum Height				
				For Shade Widths to 72"	144"	90"	90"	54"	90"
				For Shade Widths to 84"	126"	90"	90"	54"	90"
				For Shade Widths to 88"	96"	90"	90"	54"	90"
				For Shade Widths to 90"	96"	N/A	N/A	54"	90"
				For Shade Widths over 90"	60"	N/A	N/A	54"	60"

PRODUCT SIZE SPECIFICATIONS – SIMPLICITY

Minimum and Maximum Standards

Please Note: Shade sizes that are wider than the fabric roll width indicated will be made with the fabric turned width for length (railroaded). The maximum width for non-railroaded shades is the roll width unless otherwise noted.

Minimum:	Width	Height
Simplicity	19"	12"

Fabrics turned width for length will have a visible seam when fabricated longer than their maximum roll width less 10". Fabrics turned width for length may have an edge curl. This is not considered a defect in the product.

Material Name	Roll Width	Railroad Option	Splice/ Seam		Simplicity Motorized Shade Without Top Treament	Simplicity Motorized Shade with Deluxe Valance	Simplicity Motorized Shade with Fabric Valance	Simplicity Motorized Shade with Medium Cassette	Simplicity Motorized Shade with Large Cassette
Alexandria	78"	NO	NO	**Non-Railroaded**					
				Maximum Width	78"	68"	68"	78"	78"
					Maximum Height				
				For Shade Widths to 68"	144"	144"	144"	144"	144"
				For Shade Widths to 72"	144"	N/A	N/A	144"	144"
				For Shade Widths to 78"	144"	N/A	N/A	144"	144"
Astaire	94"	NO	NO	**Non-Railroaded**					
				Maximum Width	94"	N/A	N/A	94"	94"
					Maximum Height				
				For Shade Widths to 94"	144"	N/A	N/A	78"	120"
Avila R Blackout	118"	YES	YES	**Non-Railroaded**					
				Maximum Width	108"	108"	108"	108"	108"
					Maximum Height				
				For Shade Widths to 84"	144"	144"	144"	144"	144"
				For Shade Widths to 90"	138"	138"	138"	138"	138"
				For Shade Widths to 96"	108"	108"	108"	108"	108"
				For Shade Widths over 96"	66"	66"	66"	66"	66"
				Railroaded					
				Maximum Width	108"	108"	108"	108"	108"
					Maximum Height				
				For Shade Widths to 84"	144"	144"	144"	144"	144"
				For Shade Widths to 90"	138"	138"	138"	138"	138"
				For Shade Widths to 96"	108"	108"	108"	108"	108"
				For Shade Widths over 96"	66"	66"	66"	66"	66"
Baroque	78"	NO	NO	**Non-Railroaded**					
				Maximum Width	78"	68"	68"	78"	78"
					Maximum Height				
				For Shade Widths to 68"	144"	144"	144"	144"	144"
				For Shade Widths to 78"	144"	N/A	N/A	144"	144"
Blackout - Solid	72"	YES	YES	**Non-Railroaded**					
				Maximum Width	72"	62"	N/A	72"	72"
					Maximum Height				
				For Shade Widths to 62"	144"	144"	N/A	144"	144"
				For Shade Widths to 72"	144"	N/A	N/A	144"	144"
				Railroaded					
				Maximum Width	108"	108"	N/A	108"	108"
					Maximum Height				
				For Shade Widths to 90"	130"	130"	N/A	130"	130"
				For Shade Widths to 96"	108"	108"	N/A	108"	108"
				For Shade Widths to 102"	84"	84"	N/A	84"	84"
				For Shade Widths over 102"	66"	66"	N/A	66"	66"
Brilliance	118"	NO	NO	**Non-Railroaded**					
				Maximum Width	118"	108"	108"	118"	118"
					Maximum Height				
				For Shade Widths to 96"	144"	144"	144"	144"	144"
				For Shade Widths over 96"	60"	60"	60"	60"	60"
Brilliance Blackout	118"	NO	NO	**Non-Railroaded**					
				Maximum Width	108"	108"	108"	108"	108"
					Maximum Height				
				For Shade Widths to 84"	144"	144"	144"	114"	144"
				For Shade Widths to 90"	138"	138"	138"	114"	138"
				For Shade Widths to 96"	108"	108"	108"	108"	108"
				For Shade Widths over 96"	66"	66"	66"	66"	66"

PRODUCT SIZE SPECIFICATIONS – SIMPLICITY

Minimum and Maximum Standards

Please Note: Shade sizes that are wider than the fabric roll width indicated will be made with the fabric turned width for length (railroaded). The maximum width for non-railroaded shades is the roll width unless otherwise noted.

Minimum:	Width	Height
Simplicity	19"	12"

Fabrics turned width for length will have a visible seam when fabricated longer than their maximum roll width less 10". Fabrics turned width for length may have an edge curl. This is not considered a defect in the product.

Material Name	Roll Width	Railroad Option	Splice/ Seam		Simplicity Motorized Shade Without Top Treament	Simplicity Motorized Shade with Deluxe Valance	Simplicity Motorized Shade with Fabric Valance	Simplicity Motorized Shade with Medium Cassette	Simplicity Motorized Shade with Large Cassette
Cararra	110"	NO	NO	Non-Railroaded					
				Maximum Width	110"	100"	100"	110"	110"
					Maximum Height				
				For Shade Widths to 96"	144"	144"	144"	144"	144"
				For Shade Widths over 96"	84"	84"	84"	84"	84"
Cararra Blackout	110"	NO	NO	Non-Railroaded					
				Maximum Width	102"	102"	102"	102"	102"
					Maximum Height				
				For Shade Widths to 72"	144"	144"	144"	96"	144"
				For Shade Widths to 84"	126"	126"	126"	96"	126"
				For Shade Widths to 90"	96"	108"	108"	96"	96"
				For Shade Widths to 96"	78"	90"	90"	78"	78"
				For Shade Widths over 96"	60"	66"	66"	60"	60"
Claudio	110"	NO	NO	Non-Railroaded					
				Maximum Width	110"	100"	100"	110"	110"
					Maximum Height				
				Max Height: Width to 100"	144"	144"	144"	144"	144"
				Max Height: Width to 102"	144"	N/A	N/A	144"	144"
				For Shade Widths over 102"	84"	N/A	N/A	84"	84"
Claudio Blackout	110"	NO	NO	Non-Railroaded					
				Maximum Width	108"	100"	100"	108"	108"
					Maximum Height				
				For Shade Widths to 84"	144"	144"	144"	114"	144"
				For Shade Widths to 90"	138"	138"	138"	114"	138"
				For Shade Widths to 96"	108"	108"	108"	108"	108"
				For Shade Widths over 96"	66"	66"	66"	66"	66"
Cusco	110"	YES	YES	Non-Railroaded					
				Maximum Width	102"	102"	102"	102"	102"
					Maximum Height				
				For Shade Widths to 84"	144"	144"	144"	132"	144"
				For Shade Widths to 90"	138"	138"	138"	132"	138"
				For Shade Widths to 96"	108"	108"	108"	108"	108"
				For Shade Widths to 102"	84"	84"	84"	84"	84"
				Railroaded					
				Maximum Width	102"	102"	102"	102"	102"
					Maximum Height				
				For Shade Widths to 84"	144"	144"	144"	132"	144"
				For Shade Widths to 90"	138"	138"	138"	132"	138"
				For Shade Widths to 96"	108"	108"	108"	108"	108"
				For Shade Widths to 102"	84"	84"	84"	84"	84"
Darien	90"	NO	NO	Non-Railroaded					
				Maximum Width	90"	80"	80"	90"	90"
					Maximum Height				
				Max Height: Width to 80"	144"	144"	144"	144"	144"
				Max Height: Width to 90"	144"	N/A	N/A	144"	144"
Drizzle	78"	YES	YES	Non-Railroaded					
				Maximum Width	78"	68"	68"	78"	78"
					Maximum Height				
				For Shade Widths to 68"	144"	144"	144"	144"	144"
				For Shade Widths to 78"	144"	N/A	N/A	144"	144"
				Railroaded					
				Maximum Width	120"	120"	120"	120"	120"
					Maximum Height				
				Max Height: Width to 102"	144"	144"	144"	144"	144"
				Max Height: Width to 108"	108"	108"	108"	108"	108"
				Max Height: Width to 114"	84"	84"	84"	84"	84"
				Max Height: Width to 120"	60"	60"	60"	60"	60"

PRODUCT SIZE SPECIFICATIONS – SIMPLICITY

Minimum and Maximum Standards

Please Note: Shade sizes that are wider than the fabric roll width indicated will be made with the fabric turned width for length (railroaded). The maximum width for non-railroaded shades is the roll width unless otherwise noted.

Minimum:	Width	Height
Simplicity	19"	12"

Fabrics turned width for length will have a visible seam when fabricated longer than their maximum roll width less 10". Fabrics turned width for length may have an edge curl. This is not considered a defect in the product.

Material Name	Roll Width	Railroad Option	Splice/ Seam		Simplicity Motorized Shade Without Top Treament	Simplicity Motorized Shade with Deluxe Valance	Simplicity Motorized Shade with Fabric Valance	Simplicity Motorized Shade with Medium Cassette	Simplicity Motorized Shade with Large Cassette
Fiona	78"	NO	NO	Non-Railroaded					
				Maximum Width	78"	68"	68"	78"	78"
					Maximum Height				
				For Shade Widths to 68"	144"	144"	144"	144"	144"
				For Shade Widths to 78"	144"	N/A	N/A	144"	144"
Flocke Blackout	94"	YES	YES	Non-Railroaded					
				Maximum Width	94"	84"	84"	94"	94"
					Maximum Height				
				For Shade Widths to 72"	144"	144"	144"	126"	144"
				For Shade Widths to 84"	126"	126"	126"	126"	126"
				For Shade Widths to 90"	96"	N/A	N/A	96"	96"
				For Shade Widths over 90"	78"	N/A	N/A	78"	78"
				Railroaded					
				Maximum Width	102"	102"	102"	102"	102"
					Maximum Height				
				For Shade Widths to 72"	144"	144"	144"	126"	144"
				For Shade Widths to 84"	126"	126"	126"	126"	126"
				For Shade Widths to 90"	96"	96"	96"	96"	96"
				For Shade Widths over 90"	60"	60"	60"	60"	60"
Hayworth	94"	YES	YES	Non-Railroaded					
				Maximum Width	94"	84"	84"	94"	94"
					Maximum Height				
				For Shade Widths to 84"	144"	144"	144"	144"	144"
				For Shade Widths over 90"	144"	N/A	N/A	144"	144"
				Railroaded					
				Maximum Width	120"	120"	120"	120"	120"
					Maximum Height				
				Max Height: Width to 102"	144"	144"	144"	144"	144"
				Max Height: Width to 108"	108"	108"	108"	108"	108"
				Max Height: Width to 114"	84"	84"	84"	84"	84"
				Max Height: Width to 120"	60"	60"	60"	60"	60"
Illusion	72"	YES	NO	Non-Railroaded					
				Maximum Width	72"	62"	62"	72"	72"
					Maximum Height				
				For Shade Widths to 62"	144"	144"	144"	144"	144"
				For Shade Widths to 72"	144"	N/A	N/A	144"	144"
				Railroaded					
				Maximum Width	120"	120"	120"	120"	120"
					Maximum Height				
				Max Height: Width to 120"	60"	60"	60"	60"	60"
Jasper	110"	YES	YES	Non-Railroaded					
				Maximum Width	108"	100"	100"	108"	108"
					Maximum Height				
				For Shade Widths to 84"	144"	144"	144"	144"	144"
				For Shade Widths to 90"	138"	138"	138"	138"	138"
				For Shade Widths to 96"	108"	108"	108"	108"	108"
				For Shade Widths over 96"	66"	66"	66"	66"	66"
				Railroaded					
				Maximum Width	108"	108"	108"	108"	108"
					Maximum Height				
				For Shade Widths to 84"	144"	144"	144"	144"	144"
				For Shade Widths to 90"	138"	138"	138"	138"	138"
				For Shade Widths to 96"	108"	108"	108"	108"	108"
				For Shade Widths over 96"	66"	66"	66"	66"	66"

PRODUCT SIZE SPECIFICATIONS – SIMPLICITY

Minimum and Maximum Standards
Please Note: Shade sizes that are wider than the fabric roll width indicated will be made with the fabric turned width for length (railroaded). The maximum width for non-railroaded shades is the roll width unless otherwise noted.

Minimum:	Width	Height
Simplicity	19"	12"

Fabrics turned width for length will have a visible seam when fabricated longer than their maximum roll width less 10". Fabrics turned width for length may have an edge curl. This is not considered a defect in the product.

Material Name	Roll Width	Railroad Option	Splice/ Seam		Simplicity Motorized Shade Without Top Treament	Simplicity Motorized Shade with Deluxe Valance	Simplicity Motorized Shade with Fabric Valance	Simplicity Motorized Shade with Medium Cassette	Simplicity Motorized Shade with Large Cassette
Linview	**94"**	**YES**	**YES**	**Non-Railroaded**					
				Maximum Width	**94"**	**84"**	**84"**	**94"**	**94"**
					Maximum Height				
				For Shade Widths to 84"	144"	144"	144"	144"	144"
				For Shade Widths over 90"	144"	N/A	N/A	144"	144"
				Railroaded					
				Maximum Width	**102"**	**102"**	**102"**	**102"**	**102"**
					Maximum Height				
				For Shade Widths to 102"	120"	120"	120"	120"	120"
Linview Blackout	**94"**	**NO**	**NO**	**Non-Railroaded**					
				Maximum Width	**94"**	**84"**	**84"**	**94"**	**94"**
					Maximum Height				
				For Shade Widths to 84"	144"	144"	144"	144"	144"
				For Shade Widths to 90"	138"	N/A	N/A	138"	138"
				For Shade Widths over 90"	108"	N/A	N/A	108"	108"
Montero	**94"**	**NO**	**NO**	**Non-Railroaded**					
				Maximum Width	**94"**	**84"**	**84"**	**94"**	**94"**
					Maximum Height				
				For Shade Widths to 84"	144"	144"	144"	126"	144"
				For Shade Widths to 90"	138"	N/A	N/A	126"	138"
				For Shade Widths over 90"	108"	N/A	N/A	108"	108"
Moravia	**96"**	**NO**	**NO**	**Non-Railroaded**					
				Maximum Width	**96"**	**86"**	**86"**	**96"**	**96"**
					Maximum Height				
				For Shade Widths to 86"	144"	144"	144"	138"	144"
				For Shade Widths over 90"	144"	N/A	N/A	138"	144"
Santa Cruz	**94"**	**NO**	**NO**	**Non-Railroaded**					
				Maximum Width	**94"**	**84"**	**84"**	**94"**	**94"**
					Maximum Height				
				For Shade Widths to 84"	144"	144"	144"	138"	144"
				For Shade Widths to 90"	138"	N/A	N/A	138"	138"
				For Shade Widths over 90"	108"	N/A	N/A	108"	108"
Santa Cruz Blackout	**94"**	**NO**	**NO**	**Non-Railroaded**					
				Maximum Width	**94"**	**84"**	**84"**	**94"**	**94"**
					Maximum Height				
				For Shade Widths to 72"	144"	144"	144"	102"	144"
				For Shade Widths to 84"	126"	126"	126"	102"	126"
				For Shade Widths to 90"	96"	N/A	N/A	96"	96"
				For Shade Widths over 90"	78"	N/A	N/A	78"	78"

PRODUCT SIZE SPECIFICATIONS – SIMPLICITY

Minimum and Maximum Standards
Please Note: Shade sizes that are wider than the fabric roll width indicated will be made with the fabric turned width for length (railroaded). The maximum width for non-railroaded shades is the roll width unless otherwise noted.

Minimum:	Width	Height
Simplicity	19"	12"

Fabrics turned width for length will have a visible seam when fabricated longer than their maximum roll width less 10". Fabrics turned width for length may have an edge curl. This is not considered a defect in the product.

Material Name	Roll Width	Railroad Option	Splice/ Seam		Simplicity Motorized Shade Without Top Treament	Simplicity Motorized Shade with Deluxe Valance	Simplicity Motorized Shade with Fabric Valance	Simplicity Motorized Shade with Medium Cassette	Simplicity Motorized Shade with Large Cassette
Scala Blackout	**110"**	**YES**	**YES**	**Non-Railroaded**					
				Maximum Width	**102"**	**100"**	**N/A**	**102"**	**102"**
					Maximum Height				
				For Shade Widths to 84"	144"	144"	N/A	144"	144"
				For Shade Widths to 90"	138"	138"	N/A	138"	138"
				For Shade Widths to 96"	108"	108"	N/A	108"	108"
				For Shade Widths to 100"	84"	84"	N/A	84"	84"
				For Shade Widths to 102"	84"	N/A	N/A	84"	84"
				Railroaded					
				Maximum Width	**102"**	**100"**	**N/A**	**102"**	**102"**
					Maximum Height				
				For Shade Widths to 84"	144"	144"	N/A	144"	144"
				For Shade Widths to 90"	138"	138"	N/A	138"	138"
				For Shade Widths to 96"	108"	108"	N/A	108"	108"
				For Shade Widths to 100"	84"	84"	N/A	84"	84"
				For Shade Widths to 102"	84"	N/A	N/A	84"	84"
Sorrento	**108"**	**NO**	**NO**	**Non-Railroaded**					
				Maximum Width	**108"**	**98"**	**98"**	**108"**	**108"**
					Maximum Height				
				For Shade Widths to 96"	144"	144"	144"	108"	144"
				For Shade Widths over 96"	108"	108"	108"	108"	108"
Sunscreen 7000	**118"**	**YES**	**YES**	**Non-Railroaded**					
				Maximum Width	**102"**	**102"**	**102"**	**102"**	**102"**
					Maximum Height				
				For Shade Widths to 72"	144"	144"	144"	96"	144"
				For Shade Widths to 84"	126"	126"	126"	96"	126"
				For Shade Widths to 90"	96"	96"	96"	96"	96"
				For Shade Widths over 96"	78"	78"	78"	78"	78"
				For Shade Widths over 96"	60"	60"	60"	60"	60"
				Railroaded					
				Maximum Width	**102"**	**102"**	**102"**	**102"**	**102"**
					Maximum Height				
				For Shade Widths to 72"	144"	144"	144"	96"	144"
				For Shade Widths to 84"	126"	126"	126"	96"	126"
				For Shade Widths to 90"	96"	96"	96"	96"	96"
				For Shade Widths over 96"	78"	78"	78"	78"	78"
				For Shade Widths over 96"	60"	60"	60"	60"	60"
Uptown	**78"**	**YES**	**NO**	**Non-Railroaded**					
				Maximum Width	**78"**	**68"**	**68"**	**78"**	**78"**
					Maximum Height				
				For Shade Widths to 68"	144"	144"	144"	144"	144"
				For Shade Widths to 78"	144"	N/A	N/A	144"	144"
				Railroaded					
				Maximum Width	**120"**	**120"**	**120"**	**120"**	**120"**
					Maximum Height				
				For Shade Widths to 102"	66"	66"	66"	66"	66"
				For Shade Widths over 102"	60"	60"	60"	60"	60"

PRODUCT SIZE SPECIFICATIONS – SIMPLICITY

Minimum and Maximum Standards

Please Note: Shade sizes that are wider than the fabric roll width indicated will be made with the fabric turned width for length (railroaded). The maximum width for non-railroaded shades is the roll width unless otherwise noted.

Minimum:	Width	Height
Simplicity	19"	12"

Fabrics turned width for length will have a visible seam when fabricated longer than their maximum roll width less 10". Fabrics turned width for length may have an edge curl. This is not considered a defect in the product.

Material Name	Roll Width	Railroad Option	Splice/ Seam		Simplicity Motorized Shade Without Top Treament	Simplicity Motorized Shade with Deluxe Valance	Simplicity Motorized Shade with Fabric Valance	Simplicity Motorized Shade with Medium Cassette	Simplicity Motorized Shade with Large Cassette
Uptown Room Darkening	78"	YES	NO	Non-Railroaded					
				Maximum Width	78"	68"	68"	78"	78"
					Maximum Height				
				For Shade Widths to 68"	144"	144"	144"	144"	144"
				For Shade Widths to 78"	144"	N/A	N/A	144"	144"
				Railroaded					
				Maximum Width	108"	108"	108"	108"	108"
					Maximum Height				
				For Shade Widths to 108"	66"	66"	66"	66"	66"
World Textures 1	78"	YES	YES	Non-Railroaded					
				Maximum Width	78"	68"	68"	78"	78"
					Maximum Height				
				For Shade Widths to 68"	144"	144"	144"	138"	144"
				For Shade Widths to 78"	144"	N/A	N/A	138"	144"
				Railroaded					
				Maximum Width	108"	108"	108"	108"	108"
					Maximum Height				
				For Shade Widths to 84"	144"	144"	144"	138"	144"
				For Shade Widths to 90"	138"	138"	138"	138"	138"
				For Shade Widths to 96"	108"	108"	108"	108"	108"
				For Shade Widths to 102"	84"	84"	84"	84"	84"
				For Shade Widths over 102"	66"	66"	66"	66"	66"
World Textures 1 Blackout	78"	YES	YES	Non-Railroaded					
				Maximum Width	78	68"	68"	78	78
					Maximum Height				
				For Shade Widths to 68"	144"	144"	144"	108"	144"
				For Shade Widths to 78"	144"	N/A	N/A	108"	144"
				Railroaded					
				Maximum Width	102"	102"	102"	102"	102"
					Maximum Height				
				For Shade Widths to 84"	144"	144"	144"	108"	144"
				For Shade Widths to 90"	138"	138"	138"	108"	138"
				For Shade Widths to 96"	108"	108"	108"	108"	108"
				For Shade Widths to 102"	84"	84"	84"	84"	84"
World Textures 2	80"	YES	YES	Non-Railroaded					
				Maximum Width	80"	70"	70"	80"	80"
					Maximum Height				
				For Shade Widths to 70"	144"	138"	138"	90"	138"
				For Shade Widths to 80"	144"	N/A	N/A	90"	138"
				Railroaded					
				Maximum Width	102"	102"	102"	102"	102"
					Maximum Height				
				For Shade Widths to 84"	144"	138"	138"	90"	138"
				For Shade Widths to 90"	138"	138"	138"	90"	138"
				For Shade Widths to 96"	108"	108"	108"	90"	108"
				For Shade Widths to 102"	84"	84"	84"	84"	84"
World Textures 2 Blackout	80"	YES	YES	Non-Railroaded					
				Maximum Width	80"	70"	70"	80"	80"
					Maximum Height				
				For Shade Widths to 70"	144"	144"	144"	114"	144"
				For Shade Widths to 80"	144"	N/A	N/A	114"	144"
				Railroaded					
				Maximum Width	102"	102"	102"	102"	102"
					Maximum Height				
				For Shade Widths to 84"	144"	144"	144"	114"	144"
				For Shade Widths to 90"	138"	138"	138"	114"	138"
				For Shade Widths to 96"	108"	108"	108"	108"	108"
				For Shade Widths to 102"	84"	84"	84"	84"	84"

PRODUCT SIZE SPECIFICATIONS – REMOTELIFT™ MOTORIZATION

Minimum and Maximum Standards

Please Note: Shade sizes that are wider than the fabric roll width indicated will be made with the fabric turned width for length (railroaded). The maximum width for non-railroaded shades is the roll width unless otherwise noted.

Minimum:	Width	Height
RemoteLift	16"	12"

Fabrics turned width for length will have a visible seam when fabricated longer than their maximum roll width less 10". Fabrics turned width for length may have an edge curl. This is not considered a defect in the product.

Material Name	Roll Width	Railroad Option	Splice/ Seam		RemoteLift Shade without Top Treatment	RemoteLift with Fabric Valance	RemoteLift with Deluxe Valance	RemoteLift with Medium Cassette	RemoteLift with Large Cassette	RemoteLift with 3" Fascia	RemoteLift with 4" Fascia and Pocket Headrail
1% E Screen	122"	YES	YES	Non-Railroaded							
				Maximum Width	102"	102"	102"	102"	102"	102"	102"
					Maximum Height						
				For Shade Widths to 66"	144"	144"	144"	138"	144"	144"	138"
				For Shade Widths to 72"	138"	138"	138"	138"	138"	138"	138"
				For Shade Widths to 84"	120"	120"	120"	120"	120"	120"	120"
				For Shade Widths to 90"	108"	108"	108"	108"	108"	102"	108"
				For Shade Widths to 96"	102"	102"	102"	102"	102"	102"	102"
				For Shade Widths to 102"	84"	84"	84"	84"	84"	84"	84"
				Railroaded							
				Maximum Width	102"	102"	102"	102"	102"	102"	102"
					Maximum Height						
				For Shade Widths to 66"	144"	144"	144"	138"	144"	144"	138"
				For Shade Widths to 72"	138"	138"	138"	138"	138"	138"	138"
				For Shade Widths to 84"	120"	120"	120"	120"	120"	120"	120"
				For Shade Widths to 90"	108"	108"	108"	108"	108"	102"	108"
				For Shade Widths to 96"	102"	102"	102"	102"	102"	102"	102"
				For Shade Widths to 102"	84"	84"	84"	84"	84"	84"	84"
1% Sheerweave 2500	126"	YES	YES	Non-Railroaded							
				Maximum Width	96"	96"	96"	96"	96"	96"	96"
					Maximum Height						
				For Shade Widths to 60"	126"	126"	126"	114"	126"	126"	126"
				For Shade Widths to 72"	102"	102"	102"	102"	102"	102"	102"
				For Shade Widths to 78"	90"	90"	90"	90"	90"	90"	90"
				For Shade Widths to 84"	84"	84"	84"	84"	84"	84"	84"
				For Shade Widths to 90"	78"	78"	78"	78"	78"	78"	78"
				For Shade Widths to 96"	72"	72"	72"	72"	72"	72"	72"
				Railroaded							
				Maximum Width	96"	96"	96"	96"	96"	96"	96"
					Maximum Height						
				For Shade Widths to 60"	126"	126"	126"	114"	126"	126"	126"
				For Shade Widths to 72"	102"	102"	102"	102"	102"	102"	102"
				For Shade Widths to 78"	90"	90"	90"	90"	90"	90"	90"
				For Shade Widths to 84"	84"	84"	84"	84"	84"	84"	84"
				For Shade Widths to 90"	78"	78"	78"	78"	78"	78"	78"
				For Shade Widths to 96"	72"	72"	72"	72"	72"	72"	72"
1% Sheerweave 2701	126"	YES	YES	Non-Railroaded							
				Maximum Width	96"	96"	96"	96"	96"	96"	96"
					Maximum Height						
				For Shade Widths to 60"	126"	126"	126"	126"	126"	126"	126"
				For Shade Widths to 72"	102"	102"	102"	102"	102"	102"	102"
				For Shade Widths to 78"	90"	90"	90"	90"	90"	90"	90"
				For Shade Widths to 84"	84"	84"	84"	84"	84"	84"	84"
				For Shade Widths to 90"	78"	78"	78"	78"	78"	78"	78"
				For Shade Widths to 96"	72"	72"	72"	72"	72"	72"	72"
				Railroaded							
				Maximum Width	96"	96"	96"	96"	96"	96"	96"
					Maximum Height						
				For Shade Widths to 60"	126"	126"	126"	126"	126"	126"	126"
				For Shade Widths to 72"	102"	102"	102"	102"	102"	102"	102"
				For Shade Widths to 78"	90"	90"	90"	90"	90"	90"	90"
				For Shade Widths to 84"	84"	84"	84"	84"	84"	84"	84"
				For Shade Widths to 90"	78"	78"	78"	78"	78"	78"	78"
				For Shade Widths to 96"	72"	72"	72"	72"	72"	72"	72"
1% Sheerweave 5000	98"	NO	NO	Non-Railroaded							
				Maximum Width	96"	90"	90"	96"	96"	96"	96"
					Maximum Height						
				For Shade Widths to 60"	126"	86"	86"	54"	86"	75"	126"
				For Shade Widths to 72"	102"	86"	86"	54"	86"	75"	102"
				For Shade Widths to 78"	90"	86"	86"	54"	86"	75"	90"
				For Shade Widths to 84"	84"	84"	84"	54"	84"	75"	84"
				For Shade Widths to 90"	78"	78"	78"	54"	78"	75"	78"
				For Shade Widths to 96"	72"	NA	NA	54"	72"	72"	72"

PRODUCT SIZE SPECIFICATIONS – REMOTELIFT™ MOTORIZATION

Minimum and Maximum Standards
Please Note: Shade sizes that are wider than the fabric roll width indicated will be made with the fabric turned width for length (railroaded). The maximum width for non-railroaded shades is the roll width unless otherwise noted.

Minimum:	Width	Height
RemoteLift	16"	12"

Fabrics turned width for length will have a visible seam when fabricated longer than their maximum roll width less 10". Fabrics turned width for length may have an edge curl. This is not considered a defect in the product.

Material Name	Roll Width	Railroad Option	Splice/ Seam		RemoteLift Shade without Top Treatment	RemoteLift with Fabric Valance	RemoteLift with Deluxe Valance	RemoteLift with Medium Cassette	RemoteLift with Large Cassette	RemoteLift with 3" Fascia	RemoteLift with 4" Fascia and Pocket Headrail
1% Toka	118"	YES	YES	Non-Railroaded							
				Maximum Width	96"	96"	96"	96"	96"	96"	96"
					Maximum Height						
				For Shade Widths to 60"	126"	126"	126"	96"	126"	126"	126"
				For Shade Widths to 72"	102"	102"	102"	96"	102"	102"	102"
				For Shade Widths to 78"	90"	90"	90"	90"	90"	90"	90"
				For Shade Widths to 84"	84"	84"	84"	84"	84"	84"	84"
				For Shade Widths to 90"	78"	78"	78"	78"	78"	78"	78"
				For Shade Widths to 96"	72"	72"	72"	72"	72"	72"	72"
				Railroaded							
				Maximum Width	96"	96"	96"	96"	96"	96"	96"
					Maximum Height						
				For Shade Widths to 60"	126"	126"	126"	96"	126"	126"	126"
				For Shade Widths to 72"	102"	102"	102"	96"	102"	102"	102"
				For Shade Widths to 78"	90"	90"	90"	90"	90"	90"	90"
				For Shade Widths to 84"	84"	84"	84"	84"	84"	84"	84"
				For Shade Widths to 90"	78"	78"	78"	78"	78"	78"	78"
				For Shade Widths to 96"	72"	72"	72"	72"	72"	72"	72"
3% E Screen	122"	YES	YES	Non-Railroaded							
				Maximum Width	102"	102"	102"	102"	102"	102"	102"
					Maximum Height						
				For Shade Widths to 66"	144"	144"	144"	144"	144"	144"	144"
				For Shade Widths to 72"	138"	138"	138"	138"	138"	138"	138"
				For Shade Widths to 84"	120"	120"	120"	120"	120"	120"	120"
				For Shade Widths to 90"	108"	108"	108"	108"	108"	108"	108"
				For Shade Widths to 96"	102"	102"	102"	102"	102"	102"	102"
				For Shade Widths to 102"	84"	84"	84"	84"	84"	84"	84"
				Railroaded							
				Maximum Width	102"	102"	102"	102"	102"	102"	102"
					Maximum Height						
				For Shade Widths to 66"	144"	144"	144"	144"	144"	144"	144"
				For Shade Widths to 72"	138"	138"	138"	138"	138"	138"	138"
				For Shade Widths to 84"	120"	120"	120"	120"	120"	120"	120"
				For Shade Widths to 90"	108"	108"	108"	108"	108"	108"	108"
				For Shade Widths to 96"	102"	102"	102"	102"	102"	102"	102"
				For Shade Widths to 102"	84"	84"	84"	84"	84"	84"	84"
3% M Screen	122"	YES	YES	Non-Railroaded							
				Maximum Width	102"	102"	102"	102"	102"	102"	102"
					Maximum Height						
				For Shade Widths to 66"	144"	144"	144"	144"	144"	144"	144"
				For Shade Widths to 72"	138"	138"	138"	138"	138"	138"	138"
				For Shade Widths to 84"	120"	120"	120"	120"	120"	120"	120"
				For Shade Widths to 90"	108"	108"	108"	108"	108"	108"	108"
				For Shade Widths to 96"	102"	102"	102"	102"	102"	102"	102"
				For Shade Widths to 102"	84"	84"	84"	84"	84"	84"	84"
				Railroaded							
				Maximum Width	102"	102"	102"	102"	102"	102"	102"
					Maximum Height						
				For Shade Widths to 66"	144"	144"	144"	144"	144"	144"	144"
				For Shade Widths to 72"	138"	138"	138"	138"	138"	138"	138"
				For Shade Widths to 84"	120"	120"	120"	120"	120"	120"	120"
				For Shade Widths to 90"	108"	108"	108"	108"	108"	108"	108"
				For Shade Widths to 96"	102"	102"	102"	102"	102"	102"	102"
				For Shade Widths to 102"	84"	84"	84"	84"	84"	84"	84"

PRODUCT SIZE SPECIFICATIONS – REMOTELIFT™ MOTORIZATION

Minimum and Maximum Standards

Please Note: Shade sizes that are wider than the fabric roll width indicated will be made with the fabric turned width for length (railroaded). The maximum width for non-railroaded shades is the roll width unless otherwise noted.

Minimum:	Width	Height
RemoteLift	16"	12"

Fabrics turned width for length will have a visible seam when fabricated longer than their maximum roll width less 10". Fabrics turned width for length may have an edge curl. This is not considered a defect in the product.

Material Name	Roll Width	Railroad Option	Splice/ Seam		RemoteLift Shade without Top Treatment	RemoteLift with Fabric Valance	RemoteLift with Deluxe Valance	RemoteLift with Medium Cassette	RemoteLift with Large Cassette	RemoteLift with 3" Fascia	RemoteLift with 4" Fascia and Pocket Headrail
3% Sheerweave 2410	126"	YES	YES	Non-Railroaded							
				Maximum Width	102"	102"	102"	102"	102"	102"	102"
					Maximum Height						
				For Shade Widths to 66"	108"	108"	108"	108"	108"	108"	108"
				For Shade Widths to 72"	102"	102"	102"	102"	102"	102"	102"
				For Shade Widths to 84"	84"	84"	84"	84"	84"	84"	84"
				For Shade Widths to 90"	78"	78"	78"	78"	78"	78"	78"
				For Shade Widths to 96"	72"	72"	72"	72"	72"	72"	72"
				For Shade Widths to 102"	60"	60"	60"	60"	60"	60"	60"
				Railroaded							
				Maximum Width	102"	102"	102"	102"	102"	102"	102"
					Maximum Height						
				For Shade Widths to 66"	108"	108"	108"	108"	108"	108"	108"
				For Shade Widths to 72"	102"	102"	102"	102"	102"	102"	102"
				For Shade Widths to 84"	84"	84"	84"	84"	84"	84"	84"
				For Shade Widths to 90"	78"	78"	78"	78"	78"	78"	78"
				For Shade Widths to 96"	72"	72"	72"	72"	72"	72"	72"
				For Shade Widths to 102"	60"	60"	60"	60"	60"	60"	60"
3% Sheerweave 4400	126"	YES	YES	Non-Railroaded							
				Maximum Width	96"	96"	96"	96"	96"	96"	96"
					Maximum Height						
				For Shade Widths to 60"	126"	120"	120"	78"	120"	108"	126"
				For Shade Widths to 72"	102"	102"	102"	78"	102"	102"	102"
				For Shade Widths to 78"	90"	90"	90"	78"	90"	90"	90"
				For Shade Widths to 84"	84"	84"	84"	78"	84"	84"	84"
				For Shade Widths to 90"	78"	78"	78"	78"	78"	78"	78"
				For Shade Widths to 96"	72"	72"	72"	72"	72"	72"	72"
				Railroaded							
				Maximum Width	96"	96"	96"	96"	96"	96"	96"
					Maximum Height						
				For Shade Widths to 60"	126"	120"	120"	78"	120"	108"	126"
				For Shade Widths to 72"	102"	102"	102"	78"	102"	102"	102"
				For Shade Widths to 78"	90"	90"	90"	78"	90"	90"	90"
				For Shade Widths to 84"	84"	84"	84"	78"	84"	84"	84"
				For Shade Widths to 90"	78"	78"	78"	78"	78"	78"	78"
				For Shade Widths to 96"	72"	72"	72"	72"	72"	72"	72"
3% Sheerweave 5000	98"	NO	NO	Non-Railroaded							
				Maximum Width	96"	88"	88"	96"	96"	96"	96"
					Maximum Height						
				For Shade Widths to 60"	126"	72"	72"	42"	72"	66"	126"
				For Shade Widths to 72"	102"	72"	72"	42"	72"	66"	102"
				For Shade Widths to 78"	90"	72"	72"	42"	72"	66"	90"
				For Shade Widths to 84"	84"	72"	72"	42"	72"	66"	84"
				For Shade Widths to 88"	78"	72"	72"	42"	72"	66"	78"
				For Shade Widths to 90"	78"	NA	NA	42"	72"	66"	78"
				For Shade Widths to 96"	72"	NA	NA	42"	72"	66"	72"
3% T Screen	98"	YES	NO	Non-Railroaded							
				Maximum Width	98"	88"	88"	98"	98"	98"	98"
					Maximum Height						
				For Shade Widths to 66"	144"	144"	144"	108"	144"	144"	144"
				For Shade Widths to 72"	138"	138"	138"	108"	138"	138"	138"
				For Shade Widths to 84"	120"	120"	120"	108"	120"	120"	120"
				For Shade Widths to 88"	108"	108"	108"	108"	108"	108"	108"
				For Shade Widths to 90"	108"	NA	NA	108"	108"	108"	108"
				For Shade Widths to 96"	102"	NA	NA	102"	102"	102"	102"
				For Shade Widths to 98"	84"	NA	NA	84"	84"	84"	84"
				Railroaded							
				Maximum Width	108"	108"	108"	108"	108"	108"	108"
					Maximum Height						
				For Shade Widths to 96"	86"	86"	86"	86"	86"	86"	86"
				For Shade Widths to 102"	84"	84"	84"	84"	84"	84"	84"
				For Shade Widths to 108"	66"	66"	66"	66"	66"	66"	66"

PRODUCT SIZE SPECIFICATIONS – REMOTELIFT™ MOTORIZATION

Minimum and Maximum Standards

Please Note: Shade sizes that are wider than the fabric roll width indicated will be made with the fabric turned width for length (railroaded). The maximum width for non-railroaded shades is the roll width unless otherwise noted.

Minimum:	Width	Height
RemoteLift	16"	12"

Fabrics turned width for length will have a visible seam when fabricated longer than their maximum roll width less 10". Fabrics turned width for length may have an edge curl. This is not considered a defect in the product.

Material Name	Roll Width	Railroad Option	Splice/ Seam		RemoteLift Shade without Top Treatment	RemoteLift with Fabric Valance	RemoteLift with Deluxe Valance	RemoteLift with Medium Cassette	RemoteLift with Large Cassette	RemoteLift with 3" Fascia	RemoteLift with 4" Fascia and Pocket Headrail
4% S Screen	122"	NO	NO	Non-Railroaded							
				Maximum Width	96"	96"	96"	96"	96"	96"	96"
					Maximum Height						
				For Shade Widths to 60"	126"	120"	120"	72"	120"	102"	126"
				For Shade Widths to 72"	102"	102"	102"	72"	102"	102"	102"
				For Shade Widths to 78"	90"	90"	90"	72"	90"	90"	90"
				For Shade Widths to 84"	84"	84"	84"	72"	84"	84"	84"
				For Shade Widths to 90"	78"	78"	78"	72"	78"	78"	78"
				For Shade Widths to 96"	72"	72"	72"	72"	72"	72"	72"
4% Silver Screen	94"	YES	YES	Non-Railroaded							
				Maximum Width	94"	84"	84"	94"	94"	94"	94"
					Maximum Height						
				For Shade Widths to 66"	144"	144"	144"	144"	144"	144"	144"
				For Shade Widths to 72"	138"	138"	138"	138"	138"	138"	138"
				For Shade Widths to 84"	120"	120"	120"	120"	120"	120"	120"
				For Shade Widths to 90"	108"	NA	NA	108"	108"	108"	108"
				For Shade Widths to 94"	102"	NA	NA	102"	102"	102"	102"
				Railroaded							
				Maximum Width	102"	102"	102"	102"	102"	102"	102"
					Maximum Height						
				For Shade Widths to 66"	144"	144"	144"	144"	144"	144"	144"
				For Shade Widths to 72"	138"	138"	138"	138"	138"	138"	138"
				For Shade Widths to 84"	120"	120"	120"	120"	120"	120"	120"
				For Shade Widths to 90"	108"	108"	108"	108"	108"	108"	108"
				For Shade Widths to 94"	102"	102"	102"	102"	102"	102"	102"
				For Shade Widths to 102"	84"	84"	84"	84"	84"	84"	84"
5% E Screen	122"	YES	YES	Non-Railroaded							
				Maximum Width	102"	102"	102"	102"	102"	102"	102"
					Maximum Height						
				For Shade Widths to 66"	144"	144"	144"	144"	144"	144"	138"
				For Shade Widths to 72"	138"	138"	138"	138"	138"	138"	138"
				For Shade Widths to 84"	120"	120"	120"	120"	120"	120"	120"
				For Shade Widths to 90"	108"	108"	108"	108"	108"	108"	108"
				For Shade Widths to 96"	102"	102"	102"	102"	102"	102"	102"
				For Shade Widths to 102"	84"	84"	84"	84"	84"	84"	84"
				Railroaded							
				Maximum Width	102"	102"	102"	102"	102"	102"	102"
					Maximum Height						
				For Shade Widths to 66"	144"	144"	144"	144"	144"	144"	138"
				For Shade Widths to 72"	138"	138"	138"	138"	138"	138"	138"
				For Shade Widths to 84"	120"	120"	120"	120"	120"	120"	120"
				For Shade Widths to 90"	108"	108"	108"	108"	108"	108"	108"
				For Shade Widths to 96"	102"	102"	102"	102"	102"	102"	102"
				For Shade Widths to 102"	84"	84"	84"	84"	84"	84"	84"
5% M Screen Deco	98"	YES	YES	Non-Railroaded							
				Maximum Width	96"	88"	88"	96"	96"	96"	96"
					Maximum Height						
				For Shade Widths to 66"	144"	144"	144"	120"	144"	144"	144"
				For Shade Widths to 72"	138"	138"	138"	120"	138"	138"	138"
				For Shade Widths to 84"	120"	120"	120"	120"	120"	120"	120"
				For Shade Widths to 88"	108"	108"	108"	108"	108"	108"	108"
				For Shade Widths to 90"	108"	NA	NA	108"	108"	108"	108"
				For Shade Widths to 96"	102"	NA	NA	102"	102"	102"	102"
				Railroaded							
				Maximum Width	102"	102"	102"	102"	102"	102"	102"
					Maximum Height						
				For Shade Widths to 66"	144"	144"	144"	120"	144"	144"	144"
				For Shade Widths to 72"	138"	138"	138"	120"	138"	138"	138"
				For Shade Widths to 84"	120"	120"	120"	120"	120"	120"	120"
				For Shade Widths to 90"	108"	108"	108"	108"	108"	108"	108"
				For Shade Widths to 96"	102"	102"	102"	102"	102"	102"	102"
				For Shade Widths to 102"	84"	84"	84"	84"	84"	84"	84"

PRODUCT SIZE SPECIFICATIONS – REMOTELIFT™ MOTORIZATION

Minimum and Maximum Standards
Please Note: Shade sizes that are wider than the fabric roll width indicated will be made with the fabric turned width for length (railroaded). The maximum width for non-railroaded shades is the roll width unless otherwise noted.

Minimum:	Width	Height
RemoteLift	16"	12"

Fabrics turned width for length will have a visible seam when fabricated longer than their maximum roll width less 10". Fabrics turned width for length may have an edge curl. This is not considered a defect in the product.

Material Name	Roll Width	Railroad Option	Splice/ Seam		RemoteLift Shade without Top Treatment	RemoteLift with Fabric Valance	RemoteLift with Deluxe Valance	RemoteLift with Medium Cassette	RemoteLift with Large Cassette	RemoteLift with 3" Fascia	RemoteLift with 4" Fascia and Pocket Headrail
5% Sheerweave 2390	126"	YES	YES	Non-Railroaded							
				Maximum Width	102"	102"	102"	102"	102"	102"	102"
					Maximum Height						
				For Shade Widths to 66"	144"	144"	144"	144"	144"	144"	144"
				For Shade Widths to 72"	138"	138"	138"	138"	138"	138"	138"
				For Shade Widths to 84"	120"	120"	120"	120"	120"	120"	120"
				For Shade Widths to 90"	108"	108"	108"	108"	108"	108"	108"
				For Shade Widths to 96"	102"	102"	102"	102"	102"	102"	102"
				For Shade Widths to 102"	84"	84"	84"	84"	84"	84"	84"
				Railroaded							
				Maximum Width	102"	102"	102"	102"	102"	102"	102"
					Maximum Height						
				For Shade Widths to 66"	144"	144"	144"	144"	144"	144"	144"
				For Shade Widths to 72"	138"	138"	138"	138"	138"	138"	138"
				For Shade Widths to 84"	120"	120"	120"	120"	120"	120"	120"
				For Shade Widths to 90"	108"	108"	108"	108"	108"	108"	108"
				For Shade Widths to 96"	102"	102"	102"	102"	102"	102"	102"
				For Shade Widths to 102"	84"	84"	84"	84"	84"	84"	84"
5% Sheerweave 4000	126"	YES	YES	Non-Railroaded							
				Maximum Width	96"	96"	96"	96"	96"	96"	96"
					Maximum Height						
				For Shade Widths to 60"	126"	114"	114"	72"	114"	100"	126"
				For Shade Widths to 66"	108"	108"	108"	72"	108"	100"	108"
				For Shade Widths to 72"	102"	102"	102"	72"	102"	100"	102"
				For Shade Widths to 78"	90"	90"	90"	72"	90"	90"	90"
				For Shade Widths to 84"	84"	84"	84"	72"	84"	84"	84"
				For Shade Widths to 90"	78"	78"	78"	72"	78"	78"	78"
				For Shade Widths to 96"	72"	72"	72"	72"	72"	72"	72"
				Railroaded							
				Maximum Width	96"	96"	96"	96"	96"	96"	96"
					Maximum Height						
				For Shade Widths to 60"	126"	114"	114"	72"	114"	100"	126"
				For Shade Widths to 66"	108"	108"	108"	72"	108"	100"	108"
				For Shade Widths to 72"	102"	102"	102"	72"	102"	100"	102"
				For Shade Widths to 78"	90"	90"	90"	72"	90"	90"	90"
				For Shade Widths to 84"	84"	84"	84"	72"	84"	84"	84"
				For Shade Widths to 90"	78"	78"	78"	72"	78"	78"	78"
				For Shade Widths to 96"	72"	72"	72"	72"	72"	72"	72"
5% Sheerweave 5000	98"	NO	NO	Non-Railroaded							
				Maximum Width	98"	88"	88"	98"	98"	98"	98"
					Maximum Height						
				For Shade Widths to 60"	126"	90"	90"	54"	90"	78"	126"
				For Shade Widths to 66"	108"	90"	90"	54"	90"	78"	108"
				For Shade Widths to 72"	102"	90"	90"	54"	90"	78"	102"
				For Shade Widths to 84"	84"	84"	84"	54"	84"	78"	84"
				For Shade Widths to 88"	78"	78"	78"	54"	78"	78"	78"
				For Shade Widths to 90"	78"	NA	NA	54"	78"	78"	78"
				For Shade Widths to 98"	60"	NA	NA	54"	60"	60"	60"

PRODUCT SIZE SPECIFICATIONS – REMOTELIFT™ MOTORIZATION

Minimum and Maximum Standards
Please Note: Shade sizes that are wider than the fabric roll width indicated will be made with the fabric turned width for length (railroaded). The maximum width for non-railroaded shades is the roll width unless otherwise noted.

Minimum:	Width	Height
RemoteLift	16"	12"

Fabrics turned width for length will have a visible seam when fabricated longer than their maximum roll width less 10". Fabrics turned width for length may have an edge curl. This is not considered a defect in the product.

Material Name	Roll Width	Railroad Option	Splice/ Seam		RemoteLift Shade without Top Treatment	RemoteLift with Fabric Valance	RemoteLift with Deluxe Valance	RemoteLift with Medium Cassette	RemoteLift with Large Cassette	RemoteLift with 3" Fascia	RemoteLift with 4" Fascia and Pocket Headrail
7% Global Screen	**118"**	**YES**	**YES**	**Non-Railroaded**							
				Maximum Width	**108"**	**108"**	**108"**	**108"**	**108"**	**108"**	**108"**
					Maximum Height						
				For Shade Widths to 66"	144"	144"	144"	126"	144"	144"	144"
				For Shade Widths to 72"	138"	138"	138"	126"	138"	138"	138"
				For Shade Widths to 78"	126"	126"	126"	126"	126"	126"	126"
				For Shade Widths to 84"	120"	120"	120"	120"	120"	120"	120"
				For Shade Widths to 90"	108"	108"	108"	108"	108"	108"	108"
				For Shade Widths to 96"	102"	102"	102"	102"	102"	102"	102"
				For Shade Widths to 102"	84"	84"	84"	84"	84"	84"	84"
				For Shade Widths to 108"	66"	66"	66"	66"	66"	66"	66"
				Railroaded							
				Maximum Width	**108"**	**108"**	**108"**	**108"**	**108"**	**108"**	**108"**
					Maximum Height						
				For Shade Widths to 66"	144"	144"	144"	126"	144"	144"	144"
				For Shade Widths to 72"	138"	138"	138"	126"	138"	138"	138"
				For Shade Widths to 78"	126"	126"	126"	126"	126"	126"	126"
				For Shade Widths to 84"	120"	120"	120"	120"	120"	120"	120"
				For Shade Widths to 90"	108"	108"	108"	108"	108"	108"	108"
				For Shade Widths to 96"	102"	102"	102"	102"	102"	102"	102"
				For Shade Widths to 102"	84"	84"	84"	84"	84"	84"	84"
				For Shade Widths to 108"	66"	66"	66"	66"	66"	66"	66"
7% Sheerweave 5000 *(R1008)*	**98"**	**NO**	**NO**	**Non-Railroaded**							
				Maximum Width	**96"**	**88"**	**88"**	**96"**	**96"**	**96"**	**96"**
					Maximum Height						
				For Shade Widths to 60"	126"	102"	102"	66"	102"	90"	126"
				For Shade Widths to 66"	108"	102"	102"	66"	102"	90"	108"
				For Shade Widths to 72"	102"	102"	102"	66"	102"	90"	102"
				For Shade Widths to 84"	84"	84"	84"	66"	84"	84"	84"
				For Shade Widths to 88"	78"	78"	78"	66"	78"	78"	78"
				For Shade Widths to 90"	78"	NA	NA	66"	78"	78"	78"
				For Shade Widths to 96"	72"	NA	NA	66"	72"	72"	72"
7% Sheerweave 5000 *(R3408 & 3409)*	**98"**	**NO**	**NO**	**Non-Railroaded**							
				Maximum Width	**96"**	**88"**	**88"**	**96"**	**96"**	**96"**	**96"**
					Maximum Height						
				For Shade Widths to 60"	126"	126"	126"	78"	126"	108"	126"
				For Shade Widths to 66"	108"	108"	108"	78"	108"	108"	108"
				For Shade Widths to 72"	102"	102"	102"	78"	102"	102"	102"
				For Shade Widths to 84"	84"	84"	84"	78"	84"	84"	84"
				For Shade Widths to 88"	78"	78"	78"	78"	78"	78"	78"
				For Shade Widths to 90"	78"	NA	NA	78"	78"	78"	78"
				For Shade Widths to 96"	72"	NA	NA	72"	72"	72"	72"

PRODUCT SIZE SPECIFICATIONS – REMOTELIFT™ MOTORIZATION

Minimum and Maximum Standards

Please Note: Shade sizes that are wider than the fabric roll width indicated will be made with the fabric turned width for length (railroaded). The maximum width for non-railroaded shades is the roll width unless otherwise noted.

Minimum:	Width	Height
RemoteLift	16"	12"

Fabrics turned width for length will have a visible seam when fabricated longer than their maximum roll width less 10". Fabrics turned width for length may have an edge curl. This is not considered a defect in the product.

Material Name	Roll Width	Railroad Option	Splice/ Seam		RemoteLift Shade without Top Treatment	RemoteLift with Fabric Valance	RemoteLift with Deluxe Valance	RemoteLift with Medium Cassette	RemoteLift with Large Cassette	RemoteLift with 3" Fascia	RemoteLift with 4" Fascia and Pocket Headrail
10% E Screen	122"	YES	YES	Non-Railroaded							
				Maximum Width	102"	102"	102"	102"	102"	102"	102"
					Maximum Height						
				For Shade Widths to 66"	144"	144"	144"	138"	144"	144"	144"
				For Shade Widths to 72"	138"	138"	138"	138"	138"	138"	138"
				For Shade Widths to 84"	120"	120"	120"	120"	120"	120"	120"
				For Shade Widths to 90"	108"	108"	108"	108"	108"	108"	108"
				For Shade Widths to 96"	102"	102"	102"	102"	102"	102"	102"
				For Shade Widths to 102"	84"	84"	84"	84"	84"	84"	84"
				Railroaded							
				Maximum Width	102"	102"	102"	102"	102"	102"	102"
					Maximum Height						
				For Shade Widths to 66"	144"	144"	144"	138"	144"	144"	144"
				For Shade Widths to 72"	138"	138"	138"	138"	138"	138"	138"
				For Shade Widths to 84"	120"	120"	120"	120"	120"	120"	120"
				For Shade Widths to 90"	108"	108"	108"	108"	108"	108"	108"
				For Shade Widths to 96"	102"	102"	102"	102"	102"	102"	102"
				For Shade Widths to 102"	84"	84"	84"	84"	84"	84"	84"
10% Sheerweave 5000	98"	NO	NO	Non-Railroaded							
				Maximum Width	96"	88"	88"	96"	96"	96"	96"
					Maximum Height						
				For Shade Widths to 60"	126"	90"	90"	54"	90"	78"	126"
				For Shade Widths to 66"	108"	90"	90"	54"	90"	78"	108"
				For Shade Widths to 72"	102"	90"	90"	54"	90"	78"	102"
				For Shade Widths to 84"	84"	84"	84"	54"	84"	78"	84"
				For Shade Widths to 88"	78"	78"	78"	54"	78"	78"	78"
				For Shade Widths to 90"	78"	NA	NA	54"	78"	78"	78"
				For Shade Widths to 98"	60"	NA	NA	54"	60"	60"	60"

PRODUCT SIZE SPECIFICATIONS – REMOTELIFT™ MOTORIZATION

Minimum and Maximum Standards
Please Note: Shade sizes that are wider than the fabric roll width indicated will be made with the fabric turned width for length (railroaded). The maximum width for non-railroaded shades is the roll width unless otherwise noted.

Minimum:	Width	Height
RemoteLift	16"	12"

Fabrics turned width for length will have a visible seam when fabricated longer than their maximum roll width less 10". Fabrics turned width for length may have an edge curl. This is not considered a defect in the product.

Material Name	Roll Width	Railroad Option	Splice/ Seam		RemoteLift Shade without Top Treatment	RemoteLift with Fabric Valance	RemoteLift with Deluxe Valance	RemoteLift with Medium Cassette	RemoteLift with Large Cassette	RemoteLift with 3" Fascia	RemoteLift with 4" Fascia and Pocket Headrail
Alexandria	78"	NO	NO	**Non-Railroaded**							
				Maximum Width	78"	66"	66"	78"	78"	78"	78"
					Maximum Height						
				For Shade Widths to 66"	144"	144"	144"	144"	144"	144"	144"
				For Shade Widths to 78"	144"	NA	NA	144"	144"	144"	144"
Astaire	94"	NO	NO	**Maximum Width**	94"	NA	NA	94"	94"	94"	94"
					Maximum Height						
				For Shade Widths to 94"	144"	NA	NA	72"	120"	102"	144"
Avila R Blackout	118"	YES	YES	**Non-Railroaded**							
				Maximum Width	102"	102"	102"	102"	102"	102"	102"
				For Shade Widths to 66"	144"	144"	144"	144"	144"	144"	144"
				For Shade Widths to 72"	138"	138"	138"	138"	138"	138"	138"
				For Shade Widths to 84"	120"	120"	120"	120"	120"	120"	120"
				For Shade Widths to 90"	108"	108"	108"	108"	108"	108"	108"
				For Shade Widths to 96"	102"	102"	102"	102"	102"	102"	102"
				For Shade Widths to 102"	84"	84"	84"	84"	84"	84"	84"
				Railroaded							
				Maximum Width	102"	102"	102"	102"	102"	102"	102"
					Maximum Height						
				For Shade Widths to 84"	120"	120"	120"	120"	120"	120"	120"
				For Shade Widths to 90"	108"	108"	108"	108"	108"	108"	108"
				For Shade Widths to 96"	102"	102"	102"	102"	102"	102"	102"
				For Shade Widths to 102"	84"	84"	84"	84"	84"	84"	84"
Baroque	78"	NO	NO	**Non-Railroaded**							
				Maximum Width	78"	66"	66"	78"	78"	78"	78"
					Maximum Height						
				For Shade Widths to 66"	144"	144"	144"	144"	144"	144"	144"
				For Shade Widths to 72"	138"	NA	NA	138"	138"	138"	138"
				For Shade Widths to 78"	126"	NA	NA	126"	126"	126"	126"
Blackout - Solid	72"	YES	YES	**Non-Railroaded**							
				Maximum Width	72"	60"	60"	72"	72"	72"	72"
					Maximum Height						
				For Shade Widths to 60"	144"	NA	144"	144"	144"	144"	144"
				For Shade Widths to 66"	144"	NA	NA	144"	144"	144"	144"
				For Shade Widths to 72"	138"	NA	NA	138"	138"	138"	138"
				Railroaded							
				Maximum Width	108"	108"	108"	108"	108"	108"	108"
					Maximum Height						
				For Shade Widths to 66"	144"	NA	144"	144"	144"	144"	144"
				For Shade Widths to 72"	138"	NA	138"	138"	138"	138"	138"
				For Shade Widths to 84"	120"	NA	120"	120"	120"	120"	120"
				For Shade Widths to 90"	108"	NA	108"	108"	108"	108"	108"
				For Shade Widths to 96"	102"	NA	102"	102"	102"	102"	102"
				For Shade Widths to 102"	84"	NA	84"	84"	84"	84"	84"
				For Shade Widths to 108"	66"	NA	66"	66"	66"	66"	66"

PRODUCT SIZE SPECIFICATIONS – REMOTELIFT™ MOTORIZATION

Minimum and Maximum Standards
Please Note: Shade sizes that are wider than the fabric roll width indicated will be made with the fabric turned width for length (railroaded). The maximum width for non-railroaded shades is the roll width unless otherwise noted.

Minimum:	Width	Height
RemoteLift	16"	12"

Fabrics turned width for length will have a visible seam when fabricated longer than their maximum roll width less 10". Fabrics turned width for length may have an edge curl. This is not considered a defect in the product.

Material Name	Roll Width	Railroad Option	Splice/ Seam		RemoteLift Shade without Top Treatment	RemoteLift with Fabric Valance	RemoteLift with Deluxe Valance	RemoteLift with Medium Cassette	RemoteLift with Large Cassette	RemoteLift with 3" Fascia	RemoteLift with 4" Fascia and Pocket Headrail
Brilliance	**118"**	**NO**	**NO**	**Non-Railroaded**							
				Maximum Width	**114"**	**108"**	**108"**	**114"**	**114"**	**114"**	**114"**
					Maximum Height						
				For Shade Widths to 102"	144"	144"	144"	144"	144"	144"	144"
				For Shade Widths to 108"	108"	108"	108"	108"	108"	108"	108"
				For Shade Widths to 114"	84"	NA	NA	84"	84"	84"	84"
Brilliance Blackout	**118"**	**NO**	**NO**	**Non-Railroaded**							
				Maximum Width	**102"**	**102"**	**102"**	**102"**	**102"**	**102"**	**102"**
					Maximum Height						
				For Shade Widths to 66"	144"	144"	144"	114"	144"	144"	144"
				For Shade Widths to 72"	138"	138"	138"	114"	138"	138"	138"
				For Shade Widths to 84"	120"	120"	120"	114"	120"	120"	120"
				For Shade Widths to 90"	108"	108"	108"	108"	108"	108"	108"
				For Shade Widths to 96"	102"	102"	102"	102"	102"	102"	102"
				For Shade Widths to 102"	84"	84"	84"	84"	84"	84"	84"
Cararra	**110"**	**NO**	**NO**	**Non-Railroaded**							
				Maximum Width	**110"**	**100"**	**100"**	**110"**	**110"**	**110"**	**110"**
					Maximum Height						
				For Shade Widths to 100"	144"	144"	144"	144"	144"	144"	144"
				For Shade Widths to 102"	144"	NA	NA	144"	144"	144"	144"
				For Shade Widths to 108"	108"	NA	NA	108"	108"	108"	108"
				For Shade Widths to 110"	84"	NA	NA	84"	84"	84"	84"
Cararra Blackout	**110"**	**NO**	**NO**	**Non-Railroaded**							
				Maximum Width	**96"**	**96"**	**96"**	**96"**	**96"**	**96"**	**96"**
					Maximum Height						
				For Shade Widths to 60"	126"	126"	126"	96"	126"	126"	126"
				For Shade Widths to 72"	102"	102"	102"	96"	102"	102"	102"
				For Shade Widths to 78"	90"	90"	90"	90"	90"	90"	90"
				For Shade Widths to 84"	84"	84"	84"	84"	84"	84"	84"
				For Shade Widths to 90"	78"	78"	78"	78"	78"	78"	78"
				For Shade Widths to 96"	72"	72"	72"	72"	72"	72"	72"
Claudio	**110"**	**NO**	**NO**	**Non-Railroaded**							
				Maximum Width	**110"**	**100"**	**100"**	**110"**	**110"**	**110"**	**110"**
					Maximum Height						
				For Shade Widths to 100"	144"	144"	144"	144"	144"	144"	144"
				For Shade Widths to 102"	144"	NA	NA	144"	144"	144"	144"
				For Shade Widths to 110"	84"	NA	NA	84"	84"	84"	84"
Claudio Blackout	**110"**	**NO**	**NO**	**Non-Railroaded**							
				Maximum Width	**102"**	**100"**	**100"**	**102"**	**102"**	**102"**	**102"**
					Maximum Height						
				For Shade Widths to 66"	144"	144"	144"	114"	144"	144"	144"
				For Shade Widths to 72"	138"	138"	138"	114"	138"	138"	138"
				For Shade Widths to 78"	126"	126"	126"	114"	126"	126"	126"
				For Shade Widths to 84"	120"	120"	120"	114"	120"	120"	120"
				For Shade Widths to 90"	108"	108"	108"	108"	108"	108"	108"
				For Shade Widths to 96"	102"	102"	102"	102"	102"	102"	102"
				For Shade Widths to 100"	84"	84"	84"	84"	84"	84"	84"
				For Shade Widths to 102"	84"	NA	NA	84"	84"	84"	84"

PRODUCT SIZE SPECIFICATIONS – REMOTELIFT™ MOTORIZATION

Minimum and Maximum Standards
Please Note: Shade sizes that are wider than the fabric roll width indicated will be made with the fabric turned width for length (railroaded). The maximum width for non-railroaded shades is the roll width unless otherwise noted.

Minimum:	Width	Height
RemoteLift	16"	12"

Fabrics turned width for length will have a visible seam when fabricated longer than their maximum roll width less 10". Fabrics turned width for length may have an edge curl. This is not considered a defect in the product.

Material Name	Roll Width	Railroad Option	Splice/ Seam		RemoteLift Shade without Top Treatment	RemoteLift with Fabric Valance	RemoteLift with Deluxe Valance	RemoteLift with Medium Cassette	RemoteLift with Large Cassette	RemoteLift with 3" Fascia	RemoteLift with 4" Fascia and Pocket Headrail
Cusco	110"	YES	YES	Non-Railroaded							
				Maximum Width	102"	100"	100"	102"	102"	102"	102"
					Maximum Height						
				For Shade Widths to 66"	144"	144"	144"	130"	144"	144"	144"
				For Shade Widths to 72"	138"	138"	138"	130"	138"	138"	138"
				For Shade Widths to 84"	120"	120"	120"	120"	120"	120"	120"
				For Shade Widths to 90"	108"	108"	108"	108"	108"	108"	108"
				For Shade Widths to 96"	102"	102"	102"	102"	102"	102"	102"
				For Shade Widths to 100"	84"	84"	84"	84"	84"	84"	84"
				For Shade Widths to 102"	84"	NA	NA	84"	84"	84"	84"
				Railroaded							
				Maximum Width	102"	102"	102"	102"	102"	102"	102"
					Maximum Height						
				For Shade Widths to 66"	144"	144"	144"	130"	144"	144"	144"
				For Shade Widths to 72"	138"	138"	138"	130"	138"	138"	138"
				For Shade Widths to 84"	120"	120"	120"	120"	120"	120"	120"
				For Shade Widths to 90"	108"	108"	108"	108"	108"	108"	108"
				For Shade Widths to 96"	102"	102"	102"	102"	102"	102"	102"
				For Shade Widths to 102"	84"	84"	84"	84"	84"	84"	84"
Darien	90"	NO	NO	Non-Railroaded							
				Maximum Width	90"	80"	80"	90"	90"	90"	90"
					Maximum Height						
				For Shade Widths to 80"	144"	144"	144"	144"	144"	144"	144"
				For Shade Widths to 90"	144"	NA	NA	144"	144"	144"	144"
Drizzle	78"	YES	YES	Non-Railroaded							
				Maximum Width	78"	66"	66"	78"	78"	78"	78"
					Maximum Height						
				For Shade Widths to 66"	144"	144"	144"	144"	144"	144"	144"
				For Shade Widths to 78"	144"	NA	NA	144"	144"	144"	144"
				Railroaded							
				Maximum Width	114"	114"	114"	114"	114"	114"	114"
					Maximum Height						
				For Shade Widths to 102"	120"	120"	120"	120"	120"	120"	120"
				For Shade Widths to 108"	108"	108"	108"	108"	108"	108"	108"
				For Shade Widths to 114"	84"	84"	84"	84"	84"	84"	84"
Fiona	78"	NO	NO	Non-Railroaded							
				Maximum Width	78"	70"	70"	78"	78"	78"	78"
					Maximum Height						
				For Shade Widths to 66"	144"	144"	144"	144"	144"	144"	144"
				For Shade Widths to 70"	138"	138"	138"	138"	138"	138"	138"
				For Shade Widths to 72"	138"	NA	NA	138"	138"	138"	138"
				For Shade Widths to 78"	126"	NA	NA	126"	126"	126"	126"

PRODUCT SIZE SPECIFICATIONS – REMOTELIFT™ MOTORIZATION

Minimum and Maximum Standards
Please Note: Shade sizes that are wider than the fabric roll width indicated will be made with the fabric turned width for length (railroaded). The maximum width for non-railroaded shades is the roll width unless otherwise noted.

Minimum:	Width	Height
RemoteLift	16"	12"

Fabrics turned width for length will have a visible seam when fabricated longer than their maximum roll width less 10". Fabrics turned width for length may have an edge curl. This is not considered a defect in the product.

Material Name	Roll Width	Railroad Option	Splice/ Seam		RemoteLift Shade without Top Treatment	RemoteLift with Fabric Valance	RemoteLift with Deluxe Valance	RemoteLift with Medium Cassette	RemoteLift with Large Cassette	RemoteLift with 3" Fascia	RemoteLift with 4" Fascia and Pocket Headrail
Flocke Blackout	**94"**	**YES**	**YES**	**Non-Railroaded**							
				Maximum Width	**94"**	**84"**	**84"**	**94"**	**94"**	**94"**	**94"**
					Maximum Height						
				For Shade Widths to 66"	108"	108"	108"	108"	108"	108"	108"
				For Shade Widths to 72"	102"	102"	102"	102"	102"	102"	102"
				For Shade Widths to 84"	84"	84"	84"	84"	84"	84"	84"
				For Shade Widths to 90"	78"	NA	NA	78"	78"	78"	78"
				For Shade Widths to 94"	72"	NA	NA	72"	72"	72"	72"
				Railroaded							
				Maximum Width	**102"**	**102"**	**102"**	**102"**	**102"**	**102"**	**102"**
					Maximum Height						
				For Shade Widths to 66"	108"	108"	108"	108"	108"	108"	108"
				For Shade Widths to 72"	102"	102"	102"	102"	102"	102"	102"
				For Shade Widths to 84"	84"	84"	84"	84"	84"	84"	84"
				For Shade Widths to 90"	78"	78"	78"	78"	78"	78"	78"
				For Shade Widths to 96"	72"	72"	72"	72"	72"	72"	72"
				For Shade Widths to 102"	60"	60"	60"	60"	60"	60"	60"
Hayworth	**98"**	**YES**	**YES**	**Non-Railroaded**							
				Maximum Width	**98"**	**88"**	**88"**	**98"**	**98"**	**98"**	**98"**
					Maximum Height						
				For Shade Widths to 88"	144"	144"	144"	144"	144"	144"	144"
				For Shade Widths to 98"	144"	NA	NA	144"	144"	144"	144"
				Railroaded							
				Maximum Width	**114"**	**114"**	**114"**	**114"**	**114"**	**114"**	**114"**
					Maximum Height						
				For Shade Widths to 102"	144"	144"	144"	144"	144"	144"	144"
				For Shade Widths to 108"	108"	108"	108"	108"	108"	108"	108"
				For Shade Widths to 114"	84"	84"	84"	84"	84"	84"	84"
Illusion	**72"**	**YES**	**NO**	**Non-Railroaded**							
				Maximum Width	**72"**	**60"**	**60"**	**72"**	**72"**	**72"**	**72"**
					Maximum Height						
				For Shade Widths to 60"	144"	144"	144"	144"	144"	144"	144"
				For Shade Widths to 72"	144"	NA	NA	144"	144"	144"	144"
				Railroaded							
				Maximum Width	**114"**	**114"**	**114"**	**114"**	**114"**	**114"**	**114"**
					Maximum Height						
				For Shade Widths to 114"	60"	60"	60"	60"	60"	60"	60"

PRODUCT SIZE SPECIFICATIONS – REMOTELIFT™ MOTORIZATION

Minimum and Maximum Standards
Please Note: Shade sizes that are wider than the fabric roll width indicated will be made with the fabric turned width for length (railroaded). The maximum width for non-railroaded shades is the roll width unless otherwise noted.

Minimum:	Width	Height
RemoteLift	16"	12"

Fabrics turned width for length will have a visible seam when fabricated longer than their maximum roll width less 10". Fabrics turned width for length may have an edge curl. This is not considered a defect in the product.

Material Name	Roll Width	Railroad Option	Splice/ Seam		RemoteLift Shade without Top Treatment	RemoteLift with Fabric Valance	RemoteLift with Deluxe Valance	RemoteLift with Medium Cassette	RemoteLift with Large Cassette	RemoteLift with 3" Fascia	RemoteLift with 4" Fascia and Pocket Headrail
Jasper	110"	YES	YES	Non-Railroaded							
				Maximum Width	108"	100"	100"	108"	108"	108"	108"
					Maximum Height						
				For Shade Widths to 66"	144"	144"	144"	144"	144"	144"	144"
				For Shade Widths to 72"	138"	138"	138"	138"	138"	138"	138"
				For Shade Widths to 84"	120"	120"	120"	120"	120"	120"	120"
				For Shade Widths to 90"	108"	108"	108"	108"	108"	108"	108"
				For Shade Widths to 96"	102"	102"	102"	102"	102"	102"	102"
				For Shade Widths to 100"	84"	84"	84"	84"	84"	84"	84"
				For Shade Widths to 102"	84"	NA	NA	84"	84"	84"	84"
				For Shade Widths to 108"	66"	NA	NA	66"	66"	66"	66"
				Railroaded							
				Maximum Width	114"	114"	114"	114"	114"	114"	114"
					Maximum Height						
				For Shade Widths to 66"	144"	144"	144"	144"	144"	144"	144"
				For Shade Widths to 72"	138"	138"	138"	138"	138"	138"	138"
				For Shade Widths to 84"	120"	120"	120"	120"	120"	120"	120"
				For Shade Widths to 90"	108"	108"	108"	108"	108"	108"	108"
				For Shade Widths to 96"	102"	102"	102"	102"	102"	102"	102"
				For Shade Widths to 102"	84"	84"	84"	84"	84"	84"	84"
				For Shade Widths to 108"	66"	66"	66"	66"	66"	66"	66"
				For Shade Widths to 114"	48"	48"	48"	48"	48"	48"	48"
Linview	94"	YES	YES	Non-Railroaded							
				Maximum Width	94"	84"	84"	94"	94"	94"	94"
					Maximum Height						
				For Shade Widths to 84"	144"	144"	144"	144"	144"	144"	144"
				For Shade Widths to 94"	144"	NA	NA	144"	144"	144"	144"
				Railroaded							
				Maximum Width	102"	102"	102"	102"	102"	102"	102"
					Maximum Height						
				For Shade Widths to 102"	120"	120"	120"	120"	120"	120"	120"
Linview Blackout	94"	NO	NO	Non-Railroaded							
				Maximum Width	94"	84"	84"	94"	94"	94"	94"
					Maximum Height						
				For Shade Widths to 66"	144"	144"	144"	144"	144"	144"	144"
				For Shade Widths to 72"	138"	138"	138"	138"	138"	138"	138"
				For Shade Widths to 84"	120"	120"	120"	120"	120"	120"	120"
				For Shade Widths to 90"	108"	NA	NA	108"	108"	108"	108"
				For Shade Widths to 94"	102"	NA	NA	102"	102"	102"	102"
Montero	94"	NO	NO	Non-Railroaded							
				Maximum Width	94"	84"	84"	94"	94"	94"	94"
					Maximum Height						
				For Shade Widths to 72"	138"	138"	138"	132"	138"	138"	138"
				For Shade Widths to 84"	120"	120"	120"	120"	120"	120"	120"
				For Shade Widths to 90"	108"	NA	NA	108"	108"	108"	108"
				For Shade Widths to 94"	102"	NA	NA	102"	102"	102"	102"

PRODUCT SIZE SPECIFICATIONS – REMOTELIFT™ MOTORIZATION

Minimum and Maximum Standards
Please Note: Shade sizes that are wider than the fabric roll width indicated will be made with the fabric turned width for length (railroaded). The maximum width for non-railroaded shades is the roll width unless otherwise noted.

Minimum:	Width	Height
RemoteLift	16"	12"

Fabrics turned width for length will have a visible seam when fabricated longer than their maximum roll width less 10". Fabrics turned width for length may have an edge curl. This is not considered a defect in the product.

Material Name	Roll Width	Railroad Option	Splice/ Seam		RemoteLift Shade without Top Treatment	RemoteLift with Fabric Valance	RemoteLift with Deluxe Valance	RemoteLift with Medium Cassette	RemoteLift with Large Cassette	RemoteLift with 3" Fascia	RemoteLift with 4" Fascia and Pocket Headrail
Moravia	**96"**	**NO**	**NO**	**Non-Railroaded**							
				Maximum Width	**96"**	**84"**	**84"**	**96"**	**96"**	**96"**	**96"**
					Maximum Height						
				For Shade Widths to 84"	144"	144"	144"	138"	144"	144"	144"
				For Shade Widths to 96"	144"	NA	NA	138"	144"	144"	144"
Santa Cruz	**94"**	**NO**	**NO**	**Non-Railroaded**							
				Maximum Width	**94"**	**84"**	**84"**	**94"**	**94"**	**94"**	**94"**
					Maximum Height						
				For Shade Widths to 72"	138"	138"	138"	138"	138"	138"	138"
				For Shade Widths to 84"	120"	120"	120"	120"	120"	120"	120"
				For Shade Widths to 90"	108"	NA	NA	108"	108"	108"	108"
				For Shade Widths to 94"	102"	NA	NA	102"	102"	102"	102"
Santa Cruz Blackout	**94"**	**NO**	**NO**	**Non-Railroaded**							
				Maximum Width	**94"**	**84"**	**84"**	**94"**	**94"**	**94"**	**94"**
					Maximum Height						
				For Shade Widths to 60"	126"	126"	126"	102"	126"	126"	126"
				For Shade Widths to 72"	102"	102"	102"	102"	102"	102"	102"
				For Shade Widths to 78"	90"	90"	90"	90"	90"	90"	90"
				For Shade Widths to 84"	84"	84"	84"	84"	84"	84"	84"
				For Shade Widths to 90"	78"	NA	NA	78"	78"	78"	78"
				For Shade Widths to 94"	72"	NA	NA	72"	72"	72"	72"
Scala Blackout	**110"**	**YES**	**YES**	**Non-Railroaded**							
				Maximum Width	**102"**	**96"**	**96"**	**102"**	**102"**	**102"**	**102"**
					Maximum Height						
				For Shade Widths to 66"	144"	NA	144"	144"	144"	144"	144"
				For Shade Widths to 72"	138"	NA	138"	138"	138"	138"	138"
				For Shade Widths to 84"	120"	NA	120"	120"	120"	120"	120"
				For Shade Widths to 90"	108"	NA	108"	108"	108"	108"	108"
				For Shade Widths to 96"	102"	NA	102"	102"	102"	102"	102"
				For Shade Widths to 102"	84"	NA	NA	84"	84"	84"	84"
				Railroaded							
				Maximum Width	**102"**	**102"**	**102"**	**102"**	**102"**	**102"**	**102"**
					Maximum Height						
				For Shade Widths to 66"	144"	NA	144"	144"	144"	144"	144"
				For Shade Widths to 72"	138"	NA	138"	138"	138"	138"	138"
				For Shade Widths to 84"	120"	NA	120"	120"	120"	120"	120"
				For Shade Widths to 90"	108"	NA	108"	108"	108"	108"	108"
				For Shade Widths to 96"	102"	NA	102"	102"	102"	102"	102"
				For Shade Widths to 102"	84"	NA	84"	84"	84"	84"	84"

PRODUCT SIZE SPECIFICATIONS – REMOTELIFT™ MOTORIZATION

Minimum and Maximum Standards
Please Note: Shade sizes that are wider than the fabric roll width indicated will be made with the fabric turned width for length (railroaded). The maximum width for non-railroaded shades is the roll width unless otherwise noted.

Minimum:	Width	Height
RemoteLift	16"	12"

Fabrics turned width for length will have a visible seam when fabricated longer than their maximum roll width less 10". Fabrics turned width for length may have an edge curl. This is not considered a defect in the product.

Material Name	Roll Width	Railroad Option	Splice/ Seam		RemoteLift Shade without Top Treatment	RemoteLift with Fabric Valance	RemoteLift with Deluxe Valance	RemoteLift with Medium Cassette	RemoteLift with Large Cassette	RemoteLift with 3" Fascia	RemoteLift with 4" Fascia and Pocket Headrail
Sorrento	**108"**	**NO**	**NO**	**Non-Railroaded**							
				Maximum Width	**108"**	**96"**	**96"**	**108"**	**108"**	**108"**	**108"**
					Maximum Height						
				For Shade Widths to 96"	144"	144"	144"	108"	144"	144"	144"
				For Shade Widths to 102"	144"	NA	NA	108"	144"	144"	144"
				For Shade Widths to 108"	108"	NA	NA	108"	108"	108"	108"
Sunscreen 7000	**118"**	**YES**	**YES**	**Non-Railroaded**							
				Maximum Width	**96"**	**96"**	**96"**	**96"**	**96"**	**96"**	**96"**
					Maximum Height						
				For Shade Widths to 60"	126"	126"	126"	96"	126"	126"	126"
				For Shade Widths to 72"	102"	102"	102"	96"	102"	102"	102"
				For Shade Widths to 78"	90"	90"	90"	90"	90"	90"	90"
				For Shade Widths to 84"	84"	84"	84"	84"	84"	84"	84"
				For Shade Widths to 90"	78"	78"	78"	78"	78"	78"	78"
				For Shade Widths to 96"	72"	72"	72"	72"	72"	72"	72"
				Railroaded							
				Maximum Width	**96"**	**96"**	**96"**	**96"**	**96"**	**96"**	**96"**
					Maximum Height						
				For Shade Widths to 60"	126"	126"	126"	96"	126"	126"	126"
				For Shade Widths to 72"	102"	102"	102"	96"	102"	102"	102"
				For Shade Widths to 78"	90"	90"	90"	90"	90"	90"	90"
				For Shade Widths to 84"	84"	84"	84"	84"	84"	84"	84"
				For Shade Widths to 90"	78"	78"	78"	78"	78"	78"	78"
				For Shade Widths to 96"	72"	72"	72"	72"	72"	72"	72"
Uptown	**78"**	**YES**	**NO**	**Non-Railroaded**							
				Maximum Width	**78"**	**66"**	**66"**	**78"**	**78"**	**78"**	**78"**
					Maximum Height						
				For Shade Widths to 66"	144"	144"	144"	144"	144"	144"	144"
				For Shade Widths to 78"	144"	NA	NA	144"	144"	144"	144"
				Railroaded							
				Maximum Width	**114"**	**114"**	**114"**	**114"**	**114"**	**114"**	**114"**
					Maximum Height						
				For Shade Widths to 114"	66"	66"	66"	66"	66"	66"	66"
Uptown Room Darkening	**78"**	**YES**	**NO**	**Non-Railroaded**							
				Maximum Width	**78"**	**66"**	**66"**	**78"**	**78"**	**78"**	**78"**
					Maximum Height						
				For Shade Widths to 66"	144"	144"	144"	144"	144"	144"	144"
				For Shade Widths to 72"	138"	NA	NA	138"	138"	138"	138"
				For Shade Widths to 78"	126"	NA	NA	126"	126"	126"	126"
				Railroaded							
				Maximum Width	**108"**	**108"**	**108"**	**108"**	**108"**	**108"**	**108"**
					Maximum Height						
				For Shade Widths to 108"	66"	66"	66"	66"	66"	66"	66"

PRODUCT SIZE SPECIFICATIONS – REMOTELIFT™ MOTORIZATION

Minimum and Maximum Standards
Please Note: Shade sizes that are wider than the fabric roll width indicated will be made with the fabric turned width for length (railroaded). The maximum width for non-railroaded shades is the roll width unless otherwise noted.

Minimum:	Width	Height
RemoteLift	16"	12"

Fabrics turned width for length will have a visible seam when fabricated longer than their maximum roll width less 10". Fabrics turned width for length may have an edge curl. This is not considered a defect in the product.

Material Name	Roll Width	Railroad Option	Splice/ Seam		RemoteLift Shade without Top Treatment	RemoteLift with Fabric Valance	RemoteLift with Deluxe Valance	RemoteLift with Medium Cassette	RemoteLift with Large Cassette	RemoteLift with 3" Fascia	RemoteLift with 4" Fascia and Pocket Headrail
World Textures 1	78"	YES	YES	Non-Railroaded							
				Maximum Width	78"	66"	66"	78"	78"	78"	78"
					Maximum Height						
				For Shade Widths to 66"	144"	144"	144"	126"	144"	144"	144"
				For Shade Widths to 72"	138"	NA	NA	126"	138"	138"	138"
				For Shade Widths to 78"	126"	NA	NA	126"	126"	126"	126"
				Railroaded							
				Maximum Width	102"	102"	102"	102"	102"	102"	102"
					Maximum Height						
				For Shade Widths to 66"	144"	144"	144"	126"	144"	144"	144"
				For Shade Widths to 72"	138"	138"	138"	126"	138"	138"	138"
				For Shade Widths to 78"	126"	126"	126"	126"	126"	126"	126"
				For Shade Widths to 84"	120"	120"	120"	108"	120"	120"	120"
				For Shade Widths to 90"	108"	108"	108"	108"	108"	108"	108"
				For Shade Widths to 96"	102"	102"	102"	102"	102"	102"	102"
				For Shade Widths to 102"	84"	84"	84"	84"	84"	84"	84"
World Textures 1 Blackout	78"	YES	YES	Non-Railroaded							
				Maximum Width	78"	66"	66"	78"	78"	78"	78"
					Maximum Height						
				For Shade Widths to 66"	144"	138"	138"	108"	144"	144"	144"
				For Shade Widths to 72"	138"	NA	NA	108"	138"	138"	138"
				For Shade Widths to 78"	126"	NA	NA	108"	126"	126"	126"
				Railroaded							
				Maximum Width	102"	102"	102"	102"	102"	102"	102"
					Maximum Height						
				For Shade Widths to 66"	144"	144"	144"	108"	144"	144"	144"
				For Shade Widths to 72"	138"	138"	138"	108"	138"	138"	138"
				For Shade Widths to 78"	126"	126"	126"	108"	126"	126"	126"
				For Shade Widths to 84"	120"	120"	120"	108"	120"	120"	120"
				For Shade Widths to 90"	108"	108"	108"	108"	108"	108"	108"
				For Shade Widths to 96"	102"	102"	102"	102"	102"	102"	102"
				For Shade Widths to 102"	84"	84"	84"	84"	84"	84"	84"
World Textures 2	80"	YES	YES	Non-Railroaded							
				Maximum Width	80"	70"	70"	80"	80"	80"	80"
					Maximum Height						
				For Shade Widths to 66"	144"	138"	138"	84"	138"	120"	144"
				For Shade Widths to 70"	138"	138"	138"	84"	138"	120"	138"
				For Shade Widths to 72"	138"	NA	NA	84"	138"	120"	138"
				For Shade Widths to 80"	120"	NA	NA	84"	120"	120"	120"
				Railroaded							
				Maximum Width	102"	102"	102"	102"	102"	102"	102"
					Maximum Height						
				For Shade Widths to 66"	144	138"	138"	84"	138"	120"	144"
				For Shade Widths to 72"	138"	138"	138"	84"	138"	120"	138"
				For Shade Widths to 84"	120"	120"	120"	84"	120"	120"	120"
				For Shade Widths to 90"	108"	108"	108"	84"	108"	108"	108"
				For Shade Widths to 96"	102"	102"	102"	84"	102"	102"	102"
				For Shade Widths to 102"	84"	84"	84"	84"	84"	84"	84"
World Textures 2 Blackout	80"	YES	YES	Non-Railroaded							
				Maximum Width	80"	70"	70"	80"	80"	80"	80"
					Maximum Height						
				For Shade Widths to 66"	144	144"	144"	144"	144"	144"	144"
				For Shade Widths to 70"	138"	138"	138"	138"	138"	138"	138"
				For Shade Widths to 72"	138"	NA	NA	138"	138"	138"	138"
				For Shade Widths to 80"	120"	NA	NA	120"	120"	120"	120"
				Railroaded							
				Maximum Width	102"	102"	102"	102"	102"	102"	102"
					Maximum Height						
				For Shade Widths to 66"	144	144"	144"	144"	144"	144"	144"
				For Shade Widths to 72"	138"	138"	138"	138"	138"	138"	138"
				For Shade Widths to 84"	120"	120"	120"	120"	120"	120"	120"
				For Shade Widths to 90"	108"	108"	108"	108"	108"	108"	108"
				For Shade Widths to 96"	102"	102"	102"	102"	102"	102"	102"
				For Shade Widths to 102"	84"	84"	84"	84"	84"	84"	84"

PRODUCT SIZE SPECIFICATIONS – HARDWIRED MOTORIZATION

Minimum and Maximum Standards

Please Note: Shade sizes that are wider than the fabric roll width indicated will be made with the fabric turned width for length (railroaded). The maximum width for non-railroaded shades is the roll width unless otherwise noted.

Fabrics turned width for length will have a visible seam when fabricated longer than their maximum roll width less 10". Fabrics turned width for length may have an edge curl. This is not considered a defect in the product.

Motor Type	Motor Name	Min Width	Min Height	Weight Capacity
24v Low-Voltage	ST-30 Quiet	18-1/2"	12"	Lifts up to 23 lbs.
110v Hardwired	ST-50 Quiet	33"	12"	Lifts up to 52 lbs.
110v Hardwired	ST-50 Ultra Quiet	39"	12"	Lifts up to 52 lbs.

Note: 110v Motorized shades are available without top treatment, with 4" Fascia, or with Pocket.

Material Name	Roll Width	Railroad Option	Splice/ Seam		Motorized Shade without Top Treament		Motorized Shade Deluxe Valance	Motorized Shade Fabric Valance	Motorized Shade with Medium Cassette	Motorized Shade with Large Cassette	Motorized Shade with 3" Fascia	Motorized Shade with 4" Fascia		Motorized Shade with Pocket Headrail	
					24v	110v	24v	24v	24v	24v	24v	24v	110v	24v	110v
1% E Screen	122"	YES	YES	Non-Railroaded											
				Maximum Width	102"	122"	102"	102"	102"	102"	102"	102"	122"	102"	122"
					Maximum Height										
				For Shade Widths to 84"	144"	144"	144"	144"	138"	144"	144"	144"	144"	144"	144"
				For Shade Widths to 90"	138"	144"	138"	138"	138"	138"	138"	138"	144"	138"	144"
				For Shade Widths to 96"	108"	144"	108"	108"	108"	108"	108"	108"	144"	108"	144"
				For Shade Widths to 102"	84"	144"	84"	84"	84"	84"	84"	84"	144"	84"	144"
				For Shade Widths over 102"	NA	144"	NA	NA	NA	NA	NA	NA	144"	NA	144"
				Railroaded											
				Maximum Width	102"	144"	102"	102"	102"	102"	102"	102"	144"	102"	144"
					Maximum Height										
				For Shade Widths to 84"	144"	144"	144"	144"	138"	144"	144"	144"	144"	144"	144"
				For Shade Widths to 90"	138"	144"	138"	138"	138"	138"	138"	138"	144"	138"	144"
				For Shade Widths to 96"	108"	144"	108"	108"	108"	108"	108"	108"	144"	108"	144"
				For Shade Widths to 102"	84"	144"	84"	84"	84"	84"	84"	84"	144"	84"	144"
				For Shade Widths over 102"	NA	144"	NA	NA	NA	NA	NA	NA	144"	NA	144"
1% Sheerweave 2500	126"	YES	YES	Non-Railroaded											
				Maximum Width	96"	126"	96"	96"	96"	96"	96"	96"	126"	96"	126"
					Maximum Height										
				For Shade Widths to 78"	144"	144"	144"	144"	114"	144"	144"	144"	144"	144"	144"
				For Shade Widths to 84"	126"	144"	126"	126"	114"	126"	126"	126"	144"	126"	144"
				For Shade Widths to 90"	96"	144"	96"	96"	96"	96"	96"	96"	144"	96"	144"
				For Shade Widths to 96"	78"	144"	78"	78"	78"	78"	78"	78"	144"	78"	144"
				For Shade Widths over 96"	NA	144"	NA	NA	NA	NA	NA	NA	144"	NA	118"
				Railroaded											
				Maximum Width	96"	144"	96"	96"	96"	96"	96"	96"	144"	96"	144"
					Maximum Height										
				For Shade Widths to 78"	144"	144"	144"	144"	114"	144"	144"	144"	144"	144"	144"
				For Shade Widths to 84"	126"	144"	126"	126"	114"	126"	126"	126"	144"	126"	144"
				For Shade Widths to 90"	96"	144"	96"	96"	96"	96"	96"	96"	144"	96"	144"
				For Shade Widths to 96"	78"	144"	78"	78"	78"	78"	78"	78"	144"	78"	144"
				For Shade Widths over 96"	NA	144"	NA	NA	NA	NA	NA	NA	144"	NA	118"
1% Sheerweave 2701	126"	YES	YES	Non-Railroaded											
				Maximum Width	102"	126"	102"	102"	102"	102"	102"	102"	126"	102"	126"
					Maximum Height										
				For Shade Widths to 72"	144"	144"	144"	144"	138"	144"	144"	144"	144"	144"	144"
				For Shade Widths to 84"	126"	144"	126"	126"	126"	126"	126"	126"	144"	126"	144"
				For Shade Widths to 90"	96"	144"	96"	96"	96"	96"	96"	96"	144"	96"	144"
				For Shade Widths to 96"	78"	144"	78"	78"	78"	78"	78"	78"	144"	78"	144"
				For Shade Widths over 96"	60"	144"	60"	60"	60"	60"	60"	60"	144"	60"	144"
				Railroaded											
				Maximum Width	102"	144"	102"	102"	102"	102"	102"	102"	144"	102"	144"
					Maximum Height										
				For Shade Widths to 72"	144"	144"	144"	144"	138"	144"	144"	144"	144"	144"	144"
				For Shade Widths to 84"	126"	144"	126"	126"	126"	126"	126"	126"	144"	126"	144"
				For Shade Widths to 90"	96"	144"	96"	96"	96"	96"	96"	96"	144"	96"	144"
				For Shade Widths to 96"	78"	144"	78"	78"	78"	78"	78"	78"	144"	78"	144"
				For Shade Widths over 96"	60"	144"	60"	60"	60"	60"	60"	60"	144"	60"	144"

PRODUCT SIZE SPECIFICATIONS – HARDWIRED MOTORIZATION

Minimum and Maximum Standards

Please Note: Shade sizes that are wider than the fabric roll width indicated will be made with the fabric turned width for length (railroaded). The maximum width for non-railroaded shades is the roll width unless otherwise noted.

Fabrics turned width for length will have a visible seam when fabricated longer than their maximum roll width less 10". Fabrics turned width for length may have an edge curl. This is not considered a defect in the product.

Motor Type	Motor Name	Min Width	Min Height	Weight Capacity
24v Low-Voltage	ST-30 Quiet	18-1/2"	12"	Lifts up to 23 lbs.
110v Hardwired	ST-50 Quiet	33"	12"	Lifts up to 52 lbs.
110v Hardwired	ST-50 Ultra Quiet	39"	12"	Lifts up to 52 lbs.

Note: 110v Motorized shades are available without top treatment, with 4" Fascia, or with Pocket.

Material Name	Roll Width	Railroad Option	Splice/ Seam		Motorized Shade without Top Treament		Motorized Shade Deluxe Valance	Motorized Shade Fabric Valance	Motorized Shade with Medium Cassette	Motorized Shade with Large Cassette	Motorized Shade with 3" Fascia	Motorized Shade with 4" Fascia		Motorized Shade with Pocket Headrail	
					24v	110v	24v	24v	24v	24v	24v	24v	110v	24v	110v
1% Sheerweave 5000	98"	NO	NO	Non-Railroaded											
				Maximum Width	96"	96"	86"	86"	96"	96"	96"	96"	96"	96"	96"
					Maximum Height										
				For Shade Widths to 78"	144"	144"	84"	84"	55"	84"	72"	144"	144"	126"	90"
				For Shade Widths to 84"	126"	144"	84"	84"	55"	84"	72"	126"	144"	126"	90"
				For Shade Widths to 86"	96"	144"	84"	84"	55"	84"	72"	96"	144"	96"	90"
				For Shade Widths to 90"	96"	144"	NA	NA	55"	84"	72"	96"	144"	96"	90"
				For Shade Widths to 96"	78"	144"	NA	NA	55"	78"	72"	78"	144"	78"	90"
1% Toka	118"	YES	YES	Non-Railroaded											
				Maximum Width	102"	118"	102"	102"	102"	102"	102"	102"	118"	102"	118"
					Maximum Height										
				For Shade Widths to 72"	144"	144"	144"	144"	96"	144"	132"	144"	144"	144"	144"
				For Shade Widths to 84"	126"	144"	126"	126"	96"	126"	126"	126"	144"	126"	144"
				For Shade Widths to 90"	96"	144"	96"	96"	96"	96"	96"	96"	144"	96"	144"
				For Shade Widths to 96"	78"	144"	78"	78"	78"	78"	78"	78"	144"	78"	144"
				For Shade Widths over 96"	60"	144"	60"	60"	60"	60"	60"	60"	144"	60"	114"
				Railroaded											
				Maximum Width	102"	144"	102"	102"	102"	102"	102"	102"	144"	102"	144"
					Maximum Height										
				For Shade Widths to 72"	144"	144"	144"	144"	96"	144"	132"	144"	144"	144"	144"
				For Shade Widths to 84"	126"	144"	126"	126"	96"	126"	126"	126"	144"	126"	144"
				For Shade Widths to 90"	96"	144"	96"	96"	96"	96"	96"	96"	144"	96"	144"
				For Shade Widths to 96"	78"	144"	78"	78"	78"	78"	78"	78"	144"	78"	144"
				For Shade Widths over 96"	60"	144"	60"	60"	60"	60"	60"	60"	144"	60"	102"
3% E Screen	122"	YES	YES	Non-Railroaded											
				Maximum Width	102"	122"	102"	102"	102"	102"	102"	102"	122"	102"	122"
					Maximum Height										
				For Shade Widths to 84"	144"	144"	144"	144"	144"	144"	144"	144"	144"	144"	144"
				For Shade Widths to 90"	138"	144"	138"	138"	138"	138"	138"	138"	144"	138"	144"
				For Shade Widths to 96"	108"	144"	108"	108"	108"	108"	108"	108"	144"	108"	144"
				For Shade Widths to 102"	84"	144"	84"	84"	84"	84"	84"	84"	144"	84"	144"
				For Shade Widths over 102"	NA	144"	NA	NA	NA	NA	NA	NA	144"	NA	144"
				Railroaded											
				Maximum Width	102"	144"	102"	102"	102"	102"	102"	102"	144"	102"	144"
					Maximum Height										
				For Shade Widths to 84"	144"	144"	144"	144"	144"	144"	144"	144"	144"	144"	144"
				For Shade Widths to 90"	138"	144"	138"	138"	138"	138"	138"	138"	144"	138"	144"
				For Shade Widths to 96"	108"	144"	108"	108"	108"	108"	108"	108"	144"	108"	144"
				For Shade Widths to 102"	84"	144"	84"	84"	84"	84"	84"	84"	144"	84"	144"
				For Shade Widths over 102"	NA	144"	NA	NA	NA	NA	NA	NA	144"	NA	144"
3% M Screen	122"	YES	YES	Non-Railroaded											
				Maximum Width	108"	122"	108"	108"	108"	108"	108"	108"	122"	108"	122"
					Maximum Height										
				For Shade Widths to 84"	144"	144"	144"	144"	144"	144"	144"	144"	144"	144"	144"
				For Shade Widths to 90"	138"	144"	138"	138"	138"	138"	138"	138"	144"	138"	144"
				For Shade Widths to 96"	108"	144"	108"	108"	108"	108"	108"	108"	144"	108"	144"
				For Shade Widths over 96"	66"	144"	66"	66"	66"	66"	66"	66"	144"	66"	144"
				Railroaded											
				Maximum Width	108"	144"	108"	108"	108"	108"	108"	108"	144"	108"	144"
					Maximum Height										
				For Shade Widths to 84"	144"	144"	144"	144"	144"	144"	144"	144"	144"	144"	144"
				For Shade Widths to 90"	138"	144"	138"	138"	138"	138"	138"	138"	144"	138"	144"
				For Shade Widths to 96"	108"	144"	108"	108"	108"	108"	108"	108"	144"	108"	144"
				For Shade Widths over 96"	66"	144"	66"	66"	66"	66"	66"	66"	144"	66"	144"

PRODUCT SIZE SPECIFICATIONS – HARDWIRED MOTORIZATION

Minimum and Maximum Standards

Please Note: Shade sizes that are wider than the fabric roll width indicated will be made with the fabric turned width for length (railroaded). The maximum width for non-railroaded shades is the roll width unless otherwise noted.

Fabrics turned width for length will have a visible seam when fabricated longer than their maximum roll width less 10". Fabrics turned width for length may have an edge curl. This is not considered a defect in the product.

Motor Type	Motor Name	Min Width	Min Height	Weight Capacity
24v Low-Voltage	ST-30 Quiet	18-1/2"	12"	Lifts up to 23 lbs.
110v Hardwired	ST-50 Quiet	33"	12"	Lifts up to 52 lbs.
110v Hardwired	ST-50 Ultra Quiet	39"	12"	Lifts up to 52 lbs.

Note: 110v Motorized shades are available without top treatment, with 4" Fascia, or with Pocket.

Material Name	Roll Width	Railroad Option	Splice/ Seam		Motorized Shade without Top Treament		Motorized Shade Deluxe Valance	Motorized Shade Fabric Valance	Motorized Shade with Medium Cassette	Motorized Shade with Large Cassette	Motorized Shade with 3" Fascia	Motorized Shade with 4" Fascia		Motorized Shade with Pocket Headrail	
					24v	110v	24v	24v	24v	24v	24v	24v	110v	24v	110v
3% Sheerweave 2410	126"	YES	YES	Non-Railroaded											
				Maximum Width	102"	126"	102"	102"	102"	102"	102"	102"	126"	102"	126"
					Maximum Height										
				For Shade Widths to 72"	144"	144"	144"	144"	144"	144"	144"	144"	144"	144"	144"
				For Shade Widths to 84"	126"	144"	126"	126"	126"	126"	126"	126"	144"	126"	144"
				For Shade Widths to 90"	96"	144"	96"	96"	96"	96"	96"	96"	144"	96"	144"
				For Shade Widths to 96"	78"	144"	78"	78"	78"	78"	78"	78"	144"	78"	144"
				For Shade Widths over 96"	60"	144"	60"	60"	60"	60"	60"	60"	144"	60"	144"
				Railroaded											
				Maximum Width	102"	144"	102"	102"	102"	102"	102"	102"	144"	102"	144"
					Maximum Height										
				For Shade Widths to 72"	144"	144"	144"	144"	144"	144"	144"	144"	144"	144"	144"
				For Shade Widths to 84"	126"	144"	126"	126"	126"	126"	126"	126"	144"	126"	144"
				For Shade Widths to 90"	96"	144"	96"	96"	96"	96"	96"	96"	144"	96"	144"
				For Shade Widths to 96"	78"	144"	78"	78"	78"	78"	78"	78"	144"	78"	144"
				For Shade Widths over 96"	60"	144"	60"	60"	60"	60"	60"	60"	144"	60"	144"
3% Sheerweave 4400	126"	YES	YES	Non-Railroaded											
				Maximum Width	102"	126"	102"	102"	102"	102"	102"	102"	126"	102"	126"
					Maximum Height										
				For Shade Widths to 78"	144"	144"	120"	120"	78"	120"	108"	144"	144"	144"	132"
				For Shade Widths to 84"	126"	144"	120"	120"	78"	120"	108"	126"	144"	126"	132"
				For Shade Widths to 90"	96"	144"	96"	96"	78"	96"	96"	96"	144"	96"	132"
				For Shade Widths to 96"	78"	144"	78"	78"	78"	78"	78"	78"	144"	78"	132"
				For Shade Widths over 96"	60"	144"	60"	60"	60"	60"	60"	60"	144"	60"	90"
				Railroaded											
				Maximum Width	102"	144"	102"	102"	102"	102"	102"	102"	144"	102"	144"
					Maximum Height										
				For Shade Widths to 78"	144"	144"	120"	120"	78"	120"	108"	144"	144"	144"	144"
				For Shade Widths to 84"	126"	144"	120"	120"	78"	120"	108"	126"	144"	126"	132"
				For Shade Widths to 90"	96"	144"	96"	96"	78"	96"	96"	96"	144"	96"	132"
				For Shade Widths to 96"	78"	144"	78"	78"	78"	78"	78"	78"	144"	78"	132"
				For Shade Widths over 96"	60"	144"	60"	60"	60"	60"	60"	60"	144"	60"	78"
3% Sheerweave 5000	98"	NO	NO	Non-Railroaded											
				Maximum Width	96"	96"	86"	86"	96"	96"	96"	96"	98"	96"	98"
					Maximum Height										
				For Shade Widths to 78"	144"	144"	72"	72"	42"	72"	60"	144"	126"	108"	78"
				For Shade Widths to 84"	126"	144"	72"	72"	42"	72"	60"	126"	126"	108"	78"
				For Shade Widths to 86"	96"	144"	72"	72"	42"	72"	60"	96"	126"	96"	78"
				For Shade Widths to 90"	96"	144"	NA	NA	42"	72"	60"	96"	126"	96"	78"
				For Shade Widths over 90"	78"	144"	NA	NA	42"	72"	60"	78"	126"	78"	78"
3% T Screen	98"	YES	NO	Non-Railroaded											
				Maximum Width	98"	98"	88"	88"	98"	98"	98"	98"	98"	98"	98"
					Maximum Height										
				For Shade Widths to 84"	144"	144"	144"	144"	108"	144"	144"	144"	144"	144"	144"
				For Shade Widths to 88"	138"	144"	138"	138"	108"	138"	138"	138"	144"	138"	144"
				For Shade Widths to 90"	138"	144"	NA	NA	108"	138"	138"	138"	144"	138"	144"
				For Shade Widths to 96"	108"	144"	NA	NA	108"	108"	108"	108"	144"	108"	144"
				For Shade Widths over 96"	84"	144"	NA	NA	84"	84"	84"	84"	144"	84"	144"
				Railroaded											
				Maximum Width	108"	144"	108"	108"	108"	108"	108"	108"	144"	108"	144"
					Maximum Height										
				For Shade Widths to 96"	86"	82"	86"	86"	86"	86"	86"	86"	82"	86"	82"
				For Shade Widths over 96"	66"	82"	66"	66"	66"	66"	66"	66"	82"	66"	82"

PRODUCT SIZE SPECIFICATIONS – HARDWIRED MOTORIZATION

Minimum and Maximum Standards

Please Note: Shade sizes that are wider than the fabric roll width indicated will be made with the fabric turned width for length (railroaded). The maximum width for non-railroaded shades is the roll width unless otherwise noted.

Fabrics turned width for length will have a visible seam when fabricated longer than their maximum roll width less 10". Fabrics turned width for length may have an edge curl. This is not considered a defect in the product.

Motor Type	Motor Name	Min Width	Min Height	Weight Capacity
24v Low-Voltage	ST-30 Quiet	18-1/2"	12"	Lifts up to 23 lbs.
110v Hardwired	ST-50 Quiet	33"	12"	Lifts up to 52 lbs.
110v Hardwired	ST-50 Ultra Quiet	39"	12"	Lifts up to 52 lbs.

Note: 110v Motorized shades are available without top treatment, with 4" Fascia, or with Pocket.

Material Name	Roll Width	Railroad Option	Splice/ Seam		Motorized Shade without Top Treament		Motorized Shade Deluxe Valance	Motorized Shade Fabric Valance	Motorized Shade with Medium Cassette	Motorized Shade with Large Cassette	Motorized Shade with 3" Fascia	Motorized Shade with 4" Fascia		Motorized Shade with Pocket Headrail	
					24v	110v	24v	24v	24v	24v	24v	24v	110v	24v	110v
4% S Screen	122"	NO	NO	Non-Railroaded											
				Maximum Width	102"	122"	102"	102"	102"	102"	102"	102"	122"	102"	122"
					Maximum Height										
				For Shade Widths to 72"	144"	144"	120"	120"	72"	120"	102"	144"	144"	144"	126"
				For Shade Widths to 84"	126"	144"	120"	120"	72"	120"	102"	126"	144"	126"	126"
				For Shade Widths to 90"	96"	144"	96"	96"	72"	96"	96"	96"	144"	96"	126"
				For Shade Widths to 96"	78"	144"	78"	78"	72"	78"	78"	78"	144"	78"	126"
				For Shade Widths over 96"	60"	144"	60"	60"	60"	60"	60"	60"	144"	60"	90"
4% Silver Screen	94"	YES	YES	Non-Railroaded											
				Maximum Width	94"	94"	84"	84"	94"	94"	94"	94"	94"	94"	94"
					Maximum Height										
				For Shade Widths to 84"	144"	144"	144"	144"	144"	144"	144"	144"	144"	144"	144"
				For Shade Widths to 90"	138"	144"	NA	NA	138"	138"	138"	138"	144"	138"	144"
				For Shade Widths to 94"	108"	144"	NA	NA	108"	108"	108"	108"	144"	108"	144"
				Railroaded											
				Maximum Width	102"	144"	102"	102"	102"	102"	102"	102"	144"	102"	144"
					Maximum Height										
				For Shade Widths to 84"	144"	144"	144"	144"	144"	144"	144"	144"	144"	144"	144"
				For Shade Widths to 90"	138"	144"	138"	138"	138"	138"	138"	138"	144"	138"	144"
				For Shade Widths to 96"	108"	144"	108"	108"	108"	108"	108"	108"	144"	108"	144"
				For Shade Widths to 102"	84"	144"	84"	84"	84"	84"	84"	84"	144"	84"	144"
				For Shade Widths over 102"	NA	144"	NA	NA	NA	NA	NA	NA	144"	NA	144"
5% E Screen	122"	YES	YES	Non-Railroaded											
				Maximum Width	102"	122"	102"	102"	102"	102"	102"	102"	122"	102"	122"
					Maximum Height										
				For Shade Widths to 84"	144"	144"	144"	144"	144"	144"	144"	144"	144"	144"	144"
				For Shade Widths to 90"	138"	144"	138"	138"	138"	138"	138"	138"	144"	138"	144"
				For Shade Widths to 96"	108"	144"	108"	108"	108"	108"	108"	108"	144"	108"	144"
				For Shade Widths to 102"	84"	144"	84"	84"	84"	84"	84"	84"	144"	84"	144"
				For Shade Widths over 102"	NA	144"	NA	NA	NA	NA	NA	NA	144"	NA	144"
				Railroaded											
				Maximum Width	102"	144"	102"	102"	102"	102"	102"	102"	144"	102"	144"
					Maximum Height										
				For Shade Widths to 84"	144"	144"	144"	144"	144"	144"	144"	144"	144"	144"	144"
				For Shade Widths to 90"	138"	144"	138"	138"	138"	138"	138"	138"	144"	138"	144"
				For Shade Widths to 96"	108"	144"	108"	108"	108"	108"	108"	108"	144"	108"	144"
				For Shade Widths to 102"	84"	144"	84"	84"	84"	84"	84"	84"	144"	84"	144"
				For Shade Widths over 102"	NA	144"	NA	NA	NA	NA	NA	NA	144"	NA	144"

PRODUCT SIZE SPECIFICATIONS – HARDWIRED MOTORIZATION

Minimum and Maximum Standards

Please Note: Shade sizes that are wider than the fabric roll width indicated will be made with the fabric turned width for length (railroaded). The maximum width for non-railroaded shades is the roll width unless otherwise noted.

Fabrics turned width for length will have a visible seam when fabricated longer than their maximum roll width less 10". Fabrics turned width for length may have an edge curl. This is not considered a defect in the product.

Motor Type	Motor Name	Min Width	Min Height	Weight Capacity
24v Low-Voltage	ST-30 Quiet	18-1/2"	12"	Lifts up to 23 lbs.
110v Hardwired	ST-50 Quiet	33"	12"	Lifts up to 52 lbs.
110v Hardwired	ST-50 Ultra Quiet	39"	12"	Lifts up to 52 lbs.

Note: 110v Motorized shades are available without top treatment, with 4" Fascia, or with Pocket.

Material Name	Roll Width	Railroad Option	Splice/ Seam		Motorized Shade without Top Treament		Motorized Shade Deluxe Valance	Motorized Shade Fabric Valance	Motorized Shade with Medium Cassette	Motorized Shade with Large Cassette	Motorized Shade with 3" Fascia	Motorized Shade with 4" Fascia		Motorized Shade with Pocket Headrail	
					24v	110v	24v	24v	24v	24v	24v	24v	110v	24v	110v
5% M Screen Deco	98"	YES	YES	Non-Railroaded											
				Maximum Width	96"	96"	86"	86"	96"	96"	96"	96"	96"	96"	96"
					Maximum Height										
				For Shade Widths to 84"	144"	144"	144"	144"	126"	144"	144"	144"	144"	144"	144"
				For Shade Widths to 86"	138"	144"	138"	138"	126"	138"	138"	138"	144"	138"	144"
				For Shade Widths to 90"	138"	144"	NA	NA	126"	138"	138"	138"	144"	138"	144"
				For Shade Widths to 96"	108"	144"	NA	NA	108"	108"	108"	108"	144"	108"	144"
				Railroaded											
				Maximum Width	102"	144"	102"	102"	102"	102"	102"	102"	144"	102"	144"
					Maximum Height										
				For Shade Widths to 84"	144"	144"	144"	144"	126"	144"	144"	144"	144"	144"	144"
				For Shade Widths to 90"	138"	144"	138"	138"	126"	138"	138"	138"	144"	138"	144"
				For Shade Widths to 96"	108"	144"	108"	108"	108"	108"	108"	108"	144"	108"	144"
				For Shade Widths to 102"	84"	144"	84"	84"	84"	84"	84"	84"	144"	84"	144"
				For Shade Widths over 102"	NA	144"	NA	NA	NA	NA	NA	NA	144"	NA	126"
5% Sheerweave 2390	126"	YES	YES	Non-Railroaded											
				Maximum Width	102"	126"	102"	102"	102"	102"	102"	102"	126"	102"	126"
					Maximum Height										
				For Shade Widths to 84"	144"	144"	144"	144"	144"	144"	144"	144"	144"	144"	144"
				For Shade Widths to 90"	138"	144"	138"	138"	138"	138"	138"	138"	144"	138"	144"
				For Shade Widths to 96"	108"	144"	108"	108"	108"	108"	108"	108"	144"	108"	144"
				For Shade Widths to 102"	84"	144"	84"	84"	84"	84"	84"	84"	144"	84"	144"
				For Shade Widths over 102"	NA	144"	NA	NA	NA	NA	NA	NA	144"	NA	144"
				Railroaded											
				Maximum Width	102"	144"	102"	102"	102"	102"	102"	102"	144"	102"	144"
					Maximum Height										
				For Shade Widths to 84"	144"	144"	144"	144"	144"	144"	144"	144"	144"	144"	144"
				For Shade Widths to 90"	138"	144"	138"	138"	138"	138"	138"	138"	144"	138"	144"
				For Shade Widths to 96"	108"	144"	108"	108"	108"	108"	108"	108"	144"	108"	144"
				For Shade Widths to 102"	84"	144"	84"	84"	84"	84"	84"	84"	144"	84"	144"
				For Shade Widths over 102"	NA	144"	NA	NA	NA	NA	NA	NA	144"	NA	144"
5% Sheerweave 4000	126"	YES	YES	Non-Railroaded											
				Maximum Width	102"	126"	102"	102"	102"	102"	102"	102"	126"	102"	126"
					Maximum Height										
				For Shade Widths to 78"	144"	144"	138"	138"	90"	138"	120"	144"	144"	144"	144"
				For Shade Widths to 84"	126"	144"	126"	126"	90"	126"	120"	126"	144"	126"	144"
				For Shade Widths to 90"	96"	144"	96"	96"	90"	96"	96"	96"	144"	96"	144"
				For Shade Widths to 96"	78"	144"	78"	78"	78"	78"	78"	78"	144"	78"	144"
				For Shade Widths over 96"	60"	144"	60"	60"	60"	60"	60"	60"	144"	60"	90"
				Railroaded											
				Maximum Width	102"	144"	102"	102"	102"	102"	102"	102"	144"	102"	144"
					Maximum Height										
				For Shade Widths to 78"	144"	144"	138"	138"	90"	138"	120"	144"	144"	144"	144"
				For Shade Widths to 84"	126"	144"	126"	126"	90"	126"	120"	126"	144"	126"	144"
				For Shade Widths to 90"	96"	144"	96"	96"	90"	96"	96"	96"	144"	96"	144"
				For Shade Widths to 96"	78"	144"	78"	78"	78"	78"	78"	78"	144"	78"	144"
				For Shade Widths over 96"	60"	144"	60"	60"	60"	60"	60"	60"	144"	60"	90"

PRODUCT SIZE SPECIFICATIONS – HARDWIRED MOTORIZATION

Minimum and Maximum Standards

Please Note: Shade sizes that are wider than the fabric roll width indicated will be made with the fabric turned width for length (railroaded). The maximum width for non-railroaded shades is the roll width unless otherwise noted.

Fabrics turned width for length will have a visible seam when fabricated longer than their maximum roll width less 10". Fabrics turned width for length may have an edge curl. This is not considered a defect in the product.

Motor Type	Motor Name	Min Width	Min Height	Weight Capacity
24v Low-Voltage	ST-30 Quiet	18-1/2"	12"	Lifts up to 23 lbs.
110v Hardwired	ST-50 Quiet	33"	12"	Lifts up to 52 lbs.
110v Hardwired	ST-50 Ultra Quiet	39"	12"	Lifts up to 52 lbs.

Note: 110v Motorized shades are available without top treatment, with 4" Fascia, or with Pocket.

Material Name	Roll Width	Railroad Option	Splice/ Seam		Motorized Shade without Top Treament		Motorized Shade Deluxe Valance	Motorized Shade Fabric Valance	Motorized Shade with Medium Cassette	Motorized Shade with Large Cassette	Motorized Shade with 3" Fascia	Motorized Shade with 4" Fascia		Motorized Shade with Pocket Headrail	
					24v	110v	24v	24v	24v	24v	24v	24v	110v	24v	110v
5% Sheerweave 5000	98"	NO	NO	Non-Railroaded											
				Maximum Width	98"	98"	88"	88"	98"	98"	98"	98"	98"	98"	98"
					Maximum Height										
				For Shade Widths to 72"	144"	144"	90"	90"	54"	90"	78"	144"	144"	126"	96"
				For Shade Widths to 84"	126"	144"	90"	90"	54"	90"	78"	126"	144"	126"	96"
				For Shade Widths to 88"	96"	144"	90"	90"	54"	90"	78"	96"	144"	96"	96"
				For Shade Widths to 90"	96"	144"	NA	NA	54"	90"	78"	96"	144"	96"	96"
				For Shade Widths over 90"	60"	144"	NA	NA	54"	60"	60"	60"	144"	60"	96"
7% Global Screen	118"	YES	YES	Non-Railroaded											
				Maximum Width	108"	118"	108"	108"	108"	108"	108"	108"	118"	108"	118"
					Maximum Height										
				For Shade Widths to 84"	144"	144"	144"	144"	126"	144"	144"	144"	144"	144"	144"
				For Shade Widths to 90"	138"	144"	138"	138"	126"	138"	138"	138"	144"	138"	144"
				For Shade Widths to 96"	108"	144"	108"	108"	108"	108"	108"	108"	144"	108"	144"
				For Shade Widths to 102"	84"	144"	84"	84"	84"	84"	84"	84"	144"	84"	144"
				For Shade Widths to 108"	66"	144"	66"	66"	66"	66"	66"	66"	144"	66"	144"
				For Shade Widths over 108"	NA	120"	NA	NA	NA	NA	NA	NA	144"	NA	144"
				Railroaded											
				Maximum Width	108"	120"	108"	108"	108"	108"	108"	108"	120"	108"	120"
					Maximum Height										
				For Shade Widths to 84"	144"	144"	144"	144"	126"	144"	144"	144"	144"	144"	144"
				For Shade Widths to 90"	138"	144"	138"	138"	126"	138"	138"	138"	144"	138"	144"
				For Shade Widths to 96"	108"	144"	108"	108"	108"	108"	108"	108"	144"	108"	144"
				For Shade Widths to 102"	84"	144"	84"	84"	84"	84"	84"	84"	144"	84"	144"
				For Shade Widths to 108"	66"	144"	66"	66"	66"	66"	66"	66"	144"	66"	144"
				For Shade Widths over 108"	NA	120"	NA	NA	NA	NA	NA	NA	144"	NA	144"
7% Sheerweave 5000 *(R1008)*	98"	NO	NO	Non-Railroaded											
				Maximum Width	98"	98"	88"	88"	98"	98"	98"	98"	98"	98"	98"
					Maximum Height										
				For Shade Widths to 72"	144"	144"	102"	102"	66"	102"	90"	144"	144"	144"	108"
				For Shade Widths to 84"	126"	144"	102"	102"	66"	102"	90"	126"	144"	126"	108"
				For Shade Widths to 88"	96"	144"	96"	96"	66"	96"	90"	96"	144"	96"	108"
				For Shade Widths to 90"	96"	144"	NA	NA	66"	96"	90"	96"	144"	96"	108"
				For Shade Widths over 90"	60"	144"	NA	NA	60"	60"	60"	60"	144"	60"	108"
7% Sheerweave 5000 *(R3408 & R3409)*	98"	NO	NO	Non-Railroaded											
				Maximum Width	98"	98"	88"	88"	98"	98"	98"	98"	98"	98"	98"
					Maximum Height										
				For Shade Widths to 72"	144"	144"	144"	144"	78"	126"	108"	144"	144"	144"	132"
				For Shade Widths to 84"	126"	144"	144"	144"	78"	126"	108"	126"	144"	126"	132"
				For Shade Widths to 88"	96"	144"	138"	138"	78"	96"	96"	96"	144"	96"	132"
				For Shade Widths to 90"	96"	144"	NA	NA	78"	96"	96"	96"	144"	96"	132"
				For Shade Widths to 96"	78"	144"	NA	NA	78"	78"	78"	78"	144"	78"	132"
				For Shade Widths over 96"	60"	144"	NA	NA	60"	60"	60"	60"	144"	60"	132"

PRODUCT SIZE SPECIFICATIONS – HARDWIRED MOTORIZATION

Minimum and Maximum Standards

Please Note: Shade sizes that are wider than the fabric roll width indicated will be made with the fabric turned width for length (railroaded). The maximum width for non-railroaded shades is the roll width unless otherwise noted.

Fabrics turned width for length will have a visible seam when fabricated longer than their maximum roll width less 10". Fabrics turned width for length may have an edge curl. This is not considered a defect in the product.

Motor Type	Motor Name	Min Width	Min Height	Weight Capacity
24v Low-Voltage	ST-30 Quiet	18-1/2"	12"	Lifts up to 23 lbs.
110v Hardwired	ST-50 Quiet	33"	12"	Lifts up to 52 lbs.
110v Hardwired	ST-50 Ultra Quiet	39"	12"	Lifts up to 52 lbs.

Note: 110v Motorized shades are available without top treatment, with 4" Fascia, or with Pocket.

Material Name	Roll Width	Railroad Option	Splice/ Seam		Motorized Shade without Top Treament		Motorized Shade Deluxe Valance	Motorized Shade Fabric Valance	Motorized Shade with Medium Cassette	Motorized Shade with Large Cassette	Motorized Shade with 3" Fascia	Motorized Shade with 4" Fascia		Motorized Shade with Pocket Headrail	
					24v	110v	24v	24v	24v	24v	24v	24v	110v	24v	110v
10% E Screen	122"	YES	YES	Non-Railroaded											
				Maximum Width	108"	120"	108"	108"	108"	108"	108"	108"	120"	108"	120"
					Maximum Height										
				For Shade Widths to 84"	144"	144"	144"	144"	138"	144"	144"	144"	144"	144"	144"
				For Shade Widths to 90"	138"	144"	138"	138"	138"	138"	138"	138"	144"	138"	144"
				For Shade Widths to 96"	108"	144"	108"	108"	108"	108"	108"	108"	144"	108"	144"
				For Shade Widths to 102"	84"	144"	84"	84"	84"	84"	84"	84"	144"	84"	144"
				For Shade Widths over 102"	66"	144"	66"	66"	66"	66"	66"	66"	144"	66"	144"
				Railroaded											
				Maximum Width	108"	144"	108"	108"	108"	108"	108"	108"	144"	108"	144"
					Maximum Height										
				For Shade Widths to 84"	144"	144"	144"	144"	138"	144"	144"	144"	144"	144"	144"
				For Shade Widths to 90"	138"	144"	138"	138"	138"	138"	138"	138"	144"	138"	144"
				For Shade Widths to 96"	108"	144"	108"	108"	108"	108"	108"	108"	144"	108"	144"
				For Shade Widths to 102"	84"	144"	84"	84"	84"	84"	84"	84"	144"	84"	144"
				For Shade Widths over 102"	66"	144"	66"	66"	66"	66"	66"	66"	144"	66"	144"
10% Sheerweave 5000	98"	NO	NO	Non-Railroaded											
				Maximum Width	98"	98"	88"	88"	98"	98"	98"	98"	98"	98"	98"
					Maximum Height										
				For Shade Widths to 72"	144"	144"	90"	90"	54"	90"	78"	144"	144"	126"	96"
				For Shade Widths to 84"	126"	144"	90"	90"	54"	90"	78"	126"	144"	126"	96"
				For Shade Widths to 88"	96"	144"	90"	90"	54"	90"	78"	96"	144"	96"	96"
				For Shade Widths to 90"	96"	144"	NA	NA	54"	90"	78"	96"	144"	96"	96"
				For Shade Widths over 90"	60"	144"	NA	NA	54"	60"	60"	60"	144"	60"	96"

PRODUCT SIZE SPECIFICATIONS – HARDWIRED MOTORIZATION

Minimum and Maximum Standards

Please Note: Shade sizes that are wider than the fabric roll width indicated will be made with the fabric turned width for length (railroaded). The maximum width for non-railroaded shades is the roll width unless otherwise noted.

Fabrics turned width for length will have a visible seam when fabricated longer than their maximum roll width less 10". Fabrics turned width for length may have an edge curl. This is not considered a defect in the product.

Motor Type	Motor Name	Min Width	Min Height	Weight Capacity
24v Low-Voltage	ST-30 Quiet	18-1/2"	12"	Lifts up to 23 lbs.
110v Hardwired	ST-50 Quiet	33"	12"	Lifts up to 52 lbs.
110v Hardwired	ST-50 Ultra Quiet	39"	12"	Lifts up to 52 lbs.

Note: 110v Motorized shades are available without top treatment, with 4" Fascia, or with Pocket.

Material Name	Roll Width	Railroad Option	Splice/ Seam		Motorized Shade without Top Treament		Motorized Shade Deluxe Valance	Motorized Shade Fabric Valance	Motorized Shade with Medium Cassette	Motorized Shade with Large Cassette	Motorized Shade with 3" Fascia	Motorized Shade with 4" Fascia		Motorized Shade with Pocket Headrail	
					24v	110v	24v	24v	24v	24v	24v	24v	110v	24v	110v
Alexandria	78"	NO	NO	**Non-Railroaded**											
				Maximum Width	78"	78"	68"	68"	78"	78"	78"	78"	78"	78"	78"
					Maximum Height										
				For Shade Widths to 68"	144"	144"	144"	144"	144"	144"	144"	144"	144"	144"	144"
				For Shade Widths to 78"	144"	144"	NA	NA	144"	144"	144"	144"	144"	144"	144"
Astaire	94"	NO	NO	**Non-Railroaded**											
				Maximum Width	94"	94"	NA	NA	94"	94"	94"	94"	94"	94"	94"
					Maximum Height										
				For Shade Widths to 94"	144"	144"	NA	NA	78"	120"	108"	144"	144"	144"	130"
Avila R Blackout	118"	YES	YES	**Non-Railroaded**											
				Maximum Width	108"	118"	108"	108"	108"	108"	108"	108"	118"	108"	118"
					Maximum Height										
				For Shade Widths to 84"	144"	144"	144"	144"	144"	144"	144"	144"	144"	144"	144"
				For Shade Widths to 90"	138"	144"	138"	138"	138"	138"	138"	138"	144"	138"	144"
				For Shade Widths to 96"	108"	144"	108"	108"	108"	108"	108"	108"	144"	108"	144"
				For Shade Widths over 96"	66"	144"	66"	66"	66"	66"	66"	66"	144"	66"	144"
				Railroaded											
				Maximum Width	108"	120"	108"	108"	108"	108"	108"	108"	120"	108"	120"
					Maximum Height										
				For Shade Widths to 90"	120"	120"	120"	120"	120"	120"	120"	120"	120"	120"	120"
				For Shade Widths to 96"	108"	120"	108"	108"	108"	108"	108"	108"	120"	108"	120"
				For Shade Widths over 96"	66"	120"	66"	66"	66"	66"	66"	66"	120"	66"	120"
Baroque	78"	NO	NO	**Non-Railroaded**											
				Maximum Width	78"	78"	68"	68"	78"	78"	78"	78"	78"	78"	78"
					Maximum Height										
				For Shade Widths to 68"	144"	144"	144"	144"	144"	144"	144"	144"	144"	144"	144"
				For Shade Widths to 78"	144"	144"	NA	NA	144"	144"	144"	144"	144"	144"	144"
Blackout - Solid	72"	YES	YES	**Non-Railroaded**											
				Maximum Width	72"	72"	62"	62"	72"	72"	72"	72"	72"	72"	72"
					Maximum Height										
				For Shade Widths to 62"	144"	144"	144"	NA	144"	144"	144"	144"	144"	144"	144"
				For Shade Widths to 72"	144"	144"	NA	NA	144"	144"	144"	144"	144"	144"	144"
					*Fabric and Deluxe valance - max shade size is 62" x 144"										
				Railroaded											
				Maximum Width	102"	144"	102"	102"	102"	102"	102"	102"	144"	102"	144"
					Maximum Height										
				For Shade Widths to 90"	130"	130"	130"	NA	130"	130"	130"	130"	130"	130"	130"
				For Shade Widths to 96"	108"	130"	108"	NA	108"	108"	108"	108"	130"	108"	130"
				For Shade Widths to 102"	84"	130"	84"	NA	84"	84"	84"	84"	130"	84"	130"
				For Shade Widths over 102"	NA	130"	NA	NA	NA	NA	NA	NA	130"	NA	130"

PRODUCT SIZE SPECIFICATIONS – HARDWIRED MOTORIZATION

Minimum and Maximum Standards

Please Note: Shade sizes that are wider than the fabric roll width indicated will be made with the fabric turned width for length (railroaded). The maximum width for non-railroaded shades is the roll width unless otherwise noted.

Fabrics turned width for length will have a visible seam when fabricated longer than their maximum roll width less 10". Fabrics turned width for length may have an edge curl. This is not considered a defect in the product.

Motor Type	Motor Name	Min Width	Min Height	Weight Capacity
24v Low-Voltage	ST-30 Quiet	18-1/2"	12"	Lifts up to 23 lbs.
110v Hardwired	ST-50 Quiet	33"	12"	Lifts up to 52 lbs.
110v Hardwired	ST-50 Ultra Quiet	39"	12"	Lifts up to 52 lbs.

Note: 110v Motorized shades are available without top treatment, with 4" Fascia, or with Pocket.

Material Name	Roll Width	Railroad Option	Splice/ Seam		Motorized Shade without Top Treament		Motorized Shade Deluxe Valance	Motorized Shade Fabric Valance	Motorized Shade with Medium Cassette	Motorized Shade with Large Cassette	Motorized Shade with 3" Fascia	Motorized Shade with 4" Fascia		Motorized Shade with Pocket Headrail	
					24v	110v	24v	24v	24v	24v	24v	24v	110v	24v	110v
Brilliance	118"	NO	NO	Non-Railroaded											
				Maximum Width	118"	118"	108"	108"	118"	118"	118"	118"	118"	118"	118"
					Maximum Height										
				For Shade Widths to 96"	144"	144"	144"	144"	144"	144"	144"	144"	144"	144"	144"
				For Shade Widths over 96"	60"	144"	60"	60"	60"	60"	60"	60"	144"	60"	144"
Brilliance Blackout	118"	NO	NO	Non-Railroaded											
				Maximum Width	108"	118"	108"	108"	108"	108"	108"	108"	118"	108"	118"
					Maximum Height										
				For Shade Widths to 84"	144"	144"	144"	144"	114"	144"	144"	144"	144"	144"	144"
				For Shade Widths to 90"	138"	144"	138"	138"	114"	138"	138"	138"	144"	138"	144"
				For Shade Widths to 96"	108"	144"	108"	108"	108"	108"	108"	108"	144"	108"	144"
				For Shade Widths over 96"	66"	144"	66"	66"	66"	66"	66"	66"	144"	66"	144"
Cararra	110"	NO	NO	Non-Railroaded											
				Maximum Width	110"	110"	100"	100"	110"	110"	110"	110"	110"	110"	110"
					Maximum Height										
				For Shade Widths to 96"	144"	144"	144"	144"	144"	144"	144"	144"	144"	144"	144"
				For Shade Widths over 96"	84"	144"	144"	144"	84"	84"	84"	84"	144"	84"	144"
Cararra Blackout	110"	NO	NO	Non-Railroaded											
				Maximum Width	102"	110"	100"	100"	102"	102"	102"	102"	110"	102"	110"
					Maximum Height										
				For Shade Widths to 72"	144"	144"	144"	144"	96"	144"	132"	144"	144"	144"	144"
				For Shade Widths to 84"	126"	144"	126"	126"	96"	126"	126"	126"	144"	126"	144"
				For Shade Widths to 90"	96"	144"	96"	96"	96"	96"	96"	96"	144"	96"	144"
				For Shade Widths to 96"	78"	144"	78"	78"	78"	78"	78"	78"	144"	78"	144"
				For Shade Widths over 96"	60"	144"	60"	60"	60"	60"	60"	60"	144"	60"	138"
Claudio	110"	NO	NO	Non-Railroaded											
				Maximum Width	110"	110"	100"	100"	110"	110"	110"	110"	110"	110"	110"
					Maximum Height										
				For Shade Widths to 96"	144"	144"	144"	144"	144"	144"	144"	144"	144"	144"	144"
				For Shade Widths over 96"	84"	144"	144"	144"	84"	84"	84"	84"	144"	84"	144"
Claudio Blackout	110"	NO	NO	Non-Railroaded											
				Maximum Width	108"	110"	100"	100"	108"	108"	108"	108"	110"	108"	110"
					Maximum Height										
				For Shade Widths to 84"	144"	144"	144"	144"	114"	144"	144"	144"	144"	144"	144"
				For Shade Widths to 90"	138"	144"	138"	138"	114"	138"	138"	138"	144"	138"	144"
				For Shade Widths to 96"	108"	144"	108"	108"	108"	108"	108"	108"	144"	108"	144"
				For Shade Widths over 96"	66"	144"	66"	66"	66"	66"	66"	66"	144"	66"	144"

PRODUCT SIZE SPECIFICATIONS – HARDWIRED MOTORIZATION

Minimum and Maximum Standards

Please Note: Shade sizes that are wider than the fabric roll width indicated will be made with the fabric turned width for length (railroaded). The maximum width for non-railroaded shades is the roll width unless otherwise noted.

Fabrics turned width for length will have a visible seam when fabricated longer than their maximum roll width less 10". Fabrics turned width for length may have an edge curl. This is not considered a defect in the product.

Motor Type	Motor Name	Min Width	Min Height	Weight Capacity
24v Low-Voltage	ST-30 Quiet	18-1/2"	12"	Lifts up to 23 lbs.
110v Hardwired	ST-50 Quiet	33"	12"	Lifts up to 52 lbs.
110v Hardwired	ST-50 Ultra Quiet	39"	12"	Lifts up to 52 lbs.

Note: 110v Motorized shades are available without top treatment, with 4" Fascia, or with Pocket.

Material Name	Roll Width	Railroad Option	Splice/ Seam		Motorized Shade without Top Treament		Motorized Shade Deluxe Valance	Motorized Shade Fabric Valance	Motorized Shade with Medium Cassette	Motorized Shade with Large Cassette	Motorized Shade with 3" Fascia	Motorized Shade with 4" Fascia		Motorized Shade with Pocket Headrail	
					24v	110v	24v	24v	24v	24v	24v	24v	110v	24v	110v
Cusco	110"	YES	YES	Non-Railroaded											
				Maximum Width	102"	110"	100"	100"	102"	102"	102"	102"	110"	102"	110"
					Maximum Height										
				For Shade Widths to 84"	144"	144"	144"	144"	132"	144"	144"	144"	144"	144"	144"
				For Shade Widths to 90"	138"	144"	138"	138"	132"	138"	138"	138"	144"	138"	144"
				For Shade Widths to 96"	108"	144"	108"	108"	108"	108"	108"	108"	144"	108"	144"
				For Shade Widths to 100"	84"	144"	84"	84"	84"	84"	84"	84"	144"	84"	144"
				For Shade Widths to 102"	84"	144"	NA	NA	84"	84"	84"	84"	144"	84"	144"
				For Shade Widths over 102"	NA	144"	NA	NA	NA	NA	NA	NA	144"	NA	144"
				Railroaded											
				Maximum Width	102"	144"	102"	102"	102"	102"	102"	102"	144"	102"	144"
					Maximum Height										
				For Shade Widths to 84"	144"	144"	144"	144"	132"	144"	144"	144"	144"	144"	144"
				For Shade Widths to 90"	138"	144"	138"	138"	132"	138"	138"	138"	144"	138"	144"
				For Shade Widths to 96"	108"	144"	108"	108"	108"	108"	108"	108"	144"	108"	144"
				For Shade Widths to 102"	84"	144"	84"	84"	84"	84"	84"	84"	144"	84"	144"
				For Shade Widths over 102"	NA	144"	NA	NA	NA	NA	NA	NA	144"	NA	132"
Darien	90"	NO	NO	Non-Railroaded											
				Maximum Width	90"	90"	80"	80"	90"	90"	90"	90"	90"	90"	90"
					Maximum Height										
				For Shade Widths to 80"	144"	144"	144"	144"	144"	144"	144"	144"	144"	144"	144"
				For Shade Widths to 90"	144"	144"	NA	NA	144"	144"	144"	144"	144"	144"	144"
Drizzle	78"	YES	YES	Non-Railroaded											
				Maximum Width	78"	78"	68"	68"	78"	78"	78"	78"	78"	78"	78"
					Maximum Height										
				For Shade Widths to 68"	144"	144"	144"	144"	144"	144"	144"	144"	144"	144"	144"
				For Shade Widths to 78"	144"	144"	NA	NA	144"	144"	144"	144"	144"	144"	144"
				Railroaded											
				Maximum Width	120"	120"	120"	120"	120"	120"	120"	120"	120"	120"	120"
					Maximum Height										
				For Shade Widths to 78"	144"	144"	144"	144"	144"	144"	144"	144"	144"	144"	144"
				For Shade Widths to 96"	120"	120"	120"	120"	120"	120"	120"	120"	120"	120"	120"
				For Shade Width to over 96"	60"	120"	60"	60"	60"	60"	60"	60"	120"	60"	120"
Fiona	78"	NO	NO	Non-Railroaded											
				Maximum Width	78"	78"	68"	68"	78"	78"	78"	78"	78"	78"	78"
					Maximum Height										
				For Shade Widths to 68"	144"	144"	144"	144"	144"	144"	144"	144"	144"	144"	144"
				For Shade Widths to 78"	144"	144"	NA	NA	144"	144"	144"	144"	144"	144"	144"

PRODUCT SIZE SPECIFICATIONS – HARDWIRED MOTORIZATION

Minimum and Maximum Standards

Please Note: Shade sizes that are wider than the fabric roll width indicated will be made with the fabric turned width for length (railroaded). The maximum width for non-railroaded shades is the roll width unless otherwise noted.

Fabrics turned width for length will have a visible seam when fabricated longer than their maximum roll width less 10". Fabrics turned width for length may have an edge curl. This is not considered a defect in the product.

Motor Type	Motor Name	Min Width	Min Height	Weight Capacity
24v Low-Voltage	ST-30 Quiet	18-1/2"	12"	Lifts up to 23 lbs.
110v Hardwired	ST-50 Quiet	33"	12"	Lifts up to 52 lbs.
110v Hardwired	ST-50 Ultra Quiet	39"	12"	Lifts up to 52 lbs.

Note: 110v Motorized shades are available without top treatment, with 4" Fascia, or with Pocket.

Material Name	Roll Width	Railroad Option	Splice/ Seam		Motorized Shade without Top Treament		Motorized Shade Deluxe Valance	Motorized Shade Fabric Valance	Motorized Shade with Medium Cassette	Motorized Shade with Large Cassette	Motorized Shade with 3" Fascia	Motorized Shade with 4" Fascia		Motorized Shade with Pocket Headrail	
					24v	110v	24v	24v	24v	24v	24v	24v	110v	24v	110v
Flocke Blackout	94"	YES	YES	Non-Railroaded											
				Maximum Width	94"	94"	84"	84"	94"	94"	94"	94"	94"	94"	94"
					Maximum Height										
				For Shade Widths to 72"	144"	144"	144"	144"	126"	144"	144"	144"	144"	144"	144"
				For Shade Widths to 84"	126"	144"	126"	126"	126"	126"	126"	126"	144"	126"	144"
				For Shade Widths to 90"	96"	144"	NA	NA	96"	96"	96"	96"	144"	96"	144"
				For Shade Widths over 90"	78"	144"	NA	NA	78"	78"	78"	78"	144"	78"	144"
				Railroaded											
				Maximum Width	102"	144"	102"	102"	102"	102"	102"	102"	144"	102"	144"
					Maximum Height										
				For Shade Widths to 72"	144"	144"	144"	144"	126"	144"	144"	144"	144"	144"	144"
				For Shade Widths to 84"	126"	144"	126"	126"	126"	126"	126"	126"	144"	126"	144"
				For Shade Widths to 90"	96"	144"	96"	96"	96"	96"	96"	96"	144"	96"	144"
				For Shade Widths over 90"	60"	144"	60"	60"	60"	60"	60"	60"	144"	60"	132"
Hayworth	98"	YES	YES	Non-Railroaded											
				Maximum Width	98"	98"	88"	88"	98"	98"	98"	98"	98"	98"	98"
					Maximum Height										
				For Shade Widths to 88"	144"	144"	144"	144"	144"	144"	144"	144"	144"	144"	144"
				For Shade Widths over 88"	144"	144"	NA	NA	144"	144"	144"	144"	144"	144"	144"
				Railroaded											
				Maximum Width	120"	144"	120"	120"	120"	120"	120"	120"	144"	120"	144"
					Maximum Height										
				For Shade Widths to 102"	144"	144"	144"	144"	144"	144"	144"	144"	144"	144"	144"
				For Shade Widths to 108"	108"	144"	108"	108"	108"	108"	108"	108"	144"	108"	144"
				For Shade Widths to 114"	84"	144"	84"	84"	84"	84"	84"	84"	144"	84"	144"
				For Shade Widths to 120"	60"	144"	60"	60"	60"	60"	60"	60"	144"	60"	144"
				For Shade Widths over 120"	NA	144"	NA	NA	NA	NA	NA	NA	144"	NA	144"
Illusion	72"	YES	NO	Non-Railroaded											
				Maximum Width	72"	72"	62"	62"	72"	72"	72"	72"	72"	72"	72"
					Maximum Height										
				For Shade Widths to 62"	144"	144"	144"	144"	144"	144"	144"	144"	144"	144"	144"
				For Shade Widths to 72"	144"	144"	NA	NA	144"	144"	144"	144"	144"	144"	144"
				Railroaded											
				Maximum Width	120"	144"	120"	120"	120"	120"	120"	120"	144"	120"	144"
					Maximum Height										
				For Shade Widths to max width	60"	57"	60"	60"	60"	60"	60"	60"	57"	60"	57"

PRODUCT SIZE SPECIFICATIONS – HARDWIRED MOTORIZATION

Minimum and Maximum Standards

Please Note: Shade sizes that are wider than the fabric roll width indicated will be made with the fabric turned width for length (railroaded). The maximum width for non-railroaded shades is the roll width unless otherwise noted.

Fabrics turned width for length will have a visible seam when fabricated longer than their maximum roll width less 10". Fabrics turned width for length may have an edge curl. This is not considered a defect in the product.

Motor Type	Motor Name	Min Width	Min Height	Weight Capacity
24v Low-Voltage	ST-30 Quiet	18-1/2"	12"	Lifts up to 23 lbs.
110v Hardwired	ST-50 Quiet	33"	12"	Lifts up to 52 lbs.
110v Hardwired	ST-50 Ultra Quiet	39"	12"	Lifts up to 52 lbs.

Note: 110v Motorized shades are available without top treatment, with 4" Fascia, or with Pocket.

Material Name	Roll Width	Railroad Option	Splice/ Seam		Motorized Shade without Top Treament		Motorized Shade Deluxe Valance	Motorized Shade Fabric Valance	Motorized Shade with Medium Cassette	Motorized Shade with Large Cassette	Motorized Shade with 3" Fascia	Motorized Shade with 4" Fascia		Motorized Shade with Pocket Headrail	
					24v	110v	24v	24v	24v	24v	24v	24v	110v	24v	110v
Jasper	110"	YES	YES	Non-Railroaded											
				Maximum Width	108"	110"	100"	100"	108"	108"	108"	108"	110"	108"	110"
					Maximum Height										
				For Shade Widths to 84"	144"	144"	144"	144"	144"	144"	144"	144"	144"	144"	144"
				For Shade Widths to 90"	138"	144"	138"	138"	138"	138"	138"	138"	144"	138"	144"
				For Shade Widths to 96"	108"	144"	108"	108"	108"	108"	108"	108"	144"	108"	144"
				For Shade Widths to 100"	84"	144"	84"	84"	84"	84"	84"	84"	144"	84"	144"
				For Shade Widths over 100"	66"	144"	N/A	N/A	66"	66"	66"	66"	144"	66"	144"
				Railroaded											
				Maximum Width	108"	144"	108"	108"	108"	108"	108"	108"	144"	108"	144"
					Maximum Height										
				For Shade Widths to 84"	144"	144"	144"	144"	144"	144"	144"	144"	144"	144"	144"
				For Shade Widths to 90"	138"	144"	138"	138"	138"	138"	138"	138"	144"	138"	144"
				For Shade Widths over 96"	108"	144"	108"	108"	108"	108"	108"	108"	144"	108"	144"
				For Shade Widths over 96"	66"	144"	66"	66"	66"	66"	66"	66"	144"	66"	144"
Linview	94"	YES	YES	Non-Railroaded											
				Maximum Width	94"	94"	84"	84"	94"	94"	94"	94"	94"	94"	94"
					Maximum Height										
				For Shade Widths to 84"	144"	144"	144"	144"	144"	144"	144"	144"	144"	144"	144"
				For Shade Widths over 84"	144"	144"	N/A	N/A	144"	144"	144"	144"	144"	144"	144"
				Railroaded											
				Maximum Width	102"	120"	102"	102"	102"	102"	102"	102"	120"	102"	120"
					Maximum Height										
				For Shade Widths to max width	120"	120"	120"	120"	120"	120"	120"	120"	120"	120"	120"
Linview Blackout	94"	NO	NO	Non-Railroaded											
				Maximum Width	94"	94"	84"	84"	94"	94"	94"	94"	94"	94"	94"
					Maximum Height										
				For Shade Widths to 84"	144"	144"	144"	144"	144"	144"	144"	144"	144"	144"	144"
				For Shade Widths to 90"	138"	144"	NA	NA	138"	138"	138"	138"	144"	138"	144"
				For Shade Widths over 90"	108"	144"	NA	NA	108"	108"	108"	108"	144"	108"	144"
Montero	94"	NO	NO	Non-Railroaded											
				Maximum Width	94"	94"	84"	84"	94"	94"	94"	94"	94"	94"	94"
					Maximum Height										
				For Shade Widths to 84"	144"	144"	144"	144"	126"	144"	144"	144"	144"	144"	144"
				For Shade Widths to 90"	138"	144"	NA	NA	126"	138"	138"	138"	144"	138"	144"
				For Shade Widths over 90"	108"	144"	NA	NA	108"	108"	108"	108"	144"	108"	144"
Moravia	96"	NO	NO	Non-Railroaded											
				Maximum Width	96"	96"	86"	86"	96"	96"	96"	96"	96"	96"	96"
					Maximum Height										
				For Shade Widths to 86"	144"	144"	144"	144"	138"	144"	144"	144"	144"	144"	144"
				For Shade Widths over 86"	144"	144"	NA	NA	138"	144"	144"	144"	144"	144"	144"
Santa Cruz	94"	NO	NO	Non-Railroaded											
				Maximum Width	94"	94"	84"	84"	94"	94"	94"	94"	94"	94"	94"
					Maximum Height										
				For Shade Widths to 84"	144"	144"	144"	144"	138"	144"	144"	144"	144"	144"	144"
				For Shade Widths to 90"	138"	144"	NA	NA	138"	138"	138"	138"	144"	138"	144"
				For Shade Widths over 90"	108"	144"	NA	NA	108"	108"	108"	108"	144"	108"	144"
Santa Cruz Blackout	94"	NO	NO	Non-Railroaded											
				Maximum Width	94"	94"	84"	84"	94"	94"	94"	94"	94"	94"	94"
					Maximum Height										
				For Shade Widths to 72"	144"	144"	144"	144"	102"	144"	138"	144"	144"	144"	144"
				For Shade Widths to 84"	126"	144"	126"	126"	102"	126"	126"	126"	144"	126"	144"
				For Shade Widths to 90"	96"	144"	NA	NA	96"	96"	96"	96"	144"	96"	144"
				For Shade Widths over 90"	78"	144"	NA	NA	78"	78"	78"	78"	144"	78"	144"

PRODUCT SIZE SPECIFICATIONS – HARDWIRED MOTORIZATION

Minimum and Maximum Standards

Please Note: Shade sizes that are wider than the fabric roll width indicated will be made with the fabric turned width for length (railroaded). The maximum width for non-railroaded shades is the roll width unless otherwise noted.

Fabrics turned width for length will have a visible seam when fabricated longer than their maximum roll width less 10". Fabrics turned width for length may have an edge curl. This is not considered a defect in the product.

Motor Type	Motor Name	Min Width	Min Height	Weight Capacity
24v Low-Voltage	ST-30 Quiet	18-1/2"	12"	Lifts up to 23 lbs.
110v Hardwired	ST-50 Quiet	33"	12"	Lifts up to 52 lbs.
110v Hardwired	ST-50 Ultra Quiet	39"	12"	Lifts up to 52 lbs.

Note: 110v Motorized shades are available without top treatment, with 4" Fascia, or with Pocket.

Material Name	Roll Width	Railroad Option	Splice/ Seam		Motorized Shade without Top Treament		Motorized Shade Deluxe Valance	Motorized Shade Fabric Valance	Motorized Shade with Medium Cassette	Motorized Shade with Large Cassette	Motorized Shade with 3" Fascia	Motorized Shade with 4" Fascia		Motorized Shade with Pocket Headrail	
					24v	110v	24v	24v	24v	24v	24v	24v	110v	24v	110v
Scala Blackout	110"	YES	YES	Non-Railroaded											
				Maximum Width	102"	110"	100"	100"	102"	102"	102"	102"	110"	102"	110"
					Maximum Height										
				For Shade Widths to 84"	144"	144"	144"	NA	144"	144"	144"	144"	144"	144"	144"
				For Shade Widths to 90"	138"	144"	138"	NA	138"	138"	138"	138"	144"	138"	144"
				For Shade Widths to 96"	108"	144"	108"	NA	108"	108"	108"	108"	144"	108"	144"
				For Shade Widths to 100"	84"	144"	84"	NA	84"	84"	84"	84"	144"	84"	144"
				For Shade Widths to 102"	84"	144"	NA	NA	84"	84"	84"	84"	144"	84"	144"
				For Shade Widths over 102"	NA	144"	NA	NA	NA	NA	NA	NA	144"	NA	144"
				Railroaded											
				Maximum Width	102"	144"	102"	102"	102"	102"	102"	102"	144"	102"	144"
					Maximum Height										
				For Shade Widths to 84"	144"	144"	144"	NA	144"	144"	144"	144"	144"	144"	144"
				For Shade Widths to 90"	138"	144"	138"	NA	138"	138"	138"	138"	144"	138"	144"
				For Shade Widths to 96"	108"	144"	108"	NA	108"	108"	108"	108"	144"	108"	144"
				For Shade Widths to 102"	84"	144"	84"	NA	84"	84"	84"	84"	144"	84"	144"
				For Shade Widths over 102"	NA	144"	NA	NA	NA	NA	NA	NA	144"	NA	144"
Sorrento	108"	NO	NO	Non-Railroaded											
				Maximum Width	108"	108"	98"	98"	108"	108"	108"	108"	108"	108"	108"
					Maximum Height										
				For Shade Widths to 96"	144"	144"	144"	144"	108"	144"	144"	144"	144"	144"	144"
				For Shade Widths over 96"	108"	144"	108"	108"	108"	108"	108"	108"	144"	108"	144"
Sunscreen 7000	118"	YES	YES	Non-Railroaded											
				Maximum Width	102"	118"	102"	102"	102"	102"	102"	102"	118"	102"	118"
					Maximum Height										
				For Shade Widths to 72"	144"	144"	144"	144"	96"	144"	132"	144"	144"	144"	144"
				For Shade Widths to 84"	126"	144"	126"	126"	96"	126"	126"	126"	144"	126"	144"
				For Shade Widths to 90"	96"	144"	96"	96"	96"	96"	96"	96"	144"	96"	144"
				For Shade Widths to 96"	78"	144"	78"	78"	78"	78"	78"	78"	144"	78"	144"
				For Shade Widths over 96"	60"	144"	60"	60"	60"	60"	60"	60"	144"	60"	114"
				Railroaded											
				Maximum Width	102"	144"	102"	102"	102"	102"	102"	102"	144"	102"	144"
					Maximum Height										
				For Shade Widths to 72"	144"	144"	144"	144"	96"	144"	132"	144"	144"	144"	144"
				For Shade Widths to 84"	126"	144"	126"	126"	96"	126"	126"	126"	144"	126"	144"
				For Shade Widths to 90"	96"	144"	96"	96"	96"	96"	96"	96"	144"	96"	144"
				For Shade Widths to 96"	78"	144"	78"	78"	78"	78"	78"	78"	144"	78"	144"
				For Shade Widths over 96"	60"	144"	60"	60"	60"	60"	60"	60"	144"	60"	102"
Uptown	78"	YES	NO	Non-Railroaded											
				Maximum Width	78"	78"	68"	68"	78"	78"	78"	78"	78"	78"	78"
					Maximum Height										
				For Shade Widths to 68"	144"	144"	144"	144"	144"	144"	144"	144"	144"	144"	144"
				For Shade Widths to 78"	144"	144"	NA	NA	144"	144"	144"	144"	144"	144"	144"
				Railroaded											
				Maximum Width	120"	144"	120"	120"	120"	120"	120"	120"	144"	120"	144"
					Maximum Height										
				For Shade Widths to 102"	66"	63"	66"	66"	66"	66"	66"	66"	63"	66"	63"
				For Shade Widths over 102"	60"	63"	60"	60"	60"	60"	60"	60"	63"	60"	63"
				Non-Railroaded											
Uptown Room Darkening	78"	YES	NO	Maximum Width	78"	78"	68"	68"	78"	78"	78"	78"	78"	78"	78"
					Maximum Height										
				For Shade Widths to 68"	144"	144"	144"	144"	144"	144"	144"	144"	144"	144"	144"
				For Shade Widths to 78"	144"	144"	NA	NA	144"	144"	144"	144"	144"	144"	144"
				Railroaded											
				Maximum Width	108"	144"	108"	108"	108"	108"	108"	144"	144"	108"	144"
					Maximum Height										
				For Shade Widths to max width	66"	63"	66"	66"	66"	66"	66"	66"	63"	66"	63"

PRODUCT SIZE SPECIFICATIONS – HARDWIRED MOTORIZATION

Minimum and Maximum Standards

Please Note: Shade sizes that are wider than the fabric roll width indicated will be made with the fabric turned width for length (railroaded). The maximum width for non-railroaded shades is the roll width unless otherwise noted.

Fabrics turned width for length will have a visible seam when fabricated longer than their maximum roll width less 10". Fabrics turned width for length may have an edge curl. This is not considered a defect in the product.

Motor Type	Motor Name	Min Width	Min Height	Weight Capacity
24v Low-Voltage	ST-30 Quiet	18-1/2"	12"	Lifts up to 23 lbs.
110v Hardwired	ST-50 Quiet	33"	12"	Lifts up to 52 lbs.
110v Hardwired	ST-50 Ultra Quiet	39"	12"	Lifts up to 52 lbs.

Note: 110v Motorized shades are available without top treatment, with 4" Fascia, or with Pocket.

Material Name	Roll Width	Railroad Option	Splice/ Seam		Motorized Shade without Top Treament		Motorized Shade Deluxe Valance	Motorized Shade Fabric Valance	Motorized Shade with Medium Cassette	Motorized Shade with Large Cassette	Motorized Shade with 3" Fascia	Motorized Shade with 4" Fascia		Motorized Shade with Pocket Headrail	
					24v	110v	24v	24v	24v	24v	24v	24v	110v	24v	110v
World Textures 1	78"	YES	YES	Non-Railroaded											
				Maximum Width	78"	78"	68"	68"	78"	78"	78"	78"	78"	78"	78"
					Maximum Height										
				For Shade Widths to 68"	144"	144"	144"	144"	138"	144"	144"	144"	144"	144"	144"
				For Shade Widths to 78"	144"	144"	NA	NA	138"	144"	144"	144"	144"	144"	144"
				Railroaded											
				Maximum Width	108"	144"	108"	108"	108"	108"	108"	108"	144"	108"	144"
					Maximum Height										
				For Shade Widths to 84"	144"	144"	144"	144"	138"	144"	144"	144"	144"	144"	144"
				For Shade Widths to 90"	138"	144"	138"	138"	138"	138"	138"	138"	144"	138"	144"
				For Shade Widths to 96"	108"	144"	108"	108"	108"	108"	108"	108"	144"	108"	144"
				For Shade Widths to 102"	84"	144"	84"	84"	84"	84"	84"	84"	144"	84"	144"
				For Shade Widths over 102"	66"	144"	66"	66"	66"	66"	66"	66"	144"	66"	144"
World Textures 1 Blackout	78"	YES	YES	Non-Railroaded											
				Maximum Width	78"	78"	68"	68"	78"	78"	78"	78"	78"	78"	78"
					Maximum Height										
				For Shade Widths to 68"	144"	144"	144"	144"	114"	144"	144"	144"	144"	144"	144"
				For Shade Widths to 78"	144"	144"	NA	NA	114"	144"	144"	144"	144"	144"	144"
				Railroaded											
				Maximum Width	102"	144"	102"	102"	102"	102"	102"	102"	144"	102"	144"
					Maximum Height										
				For Shade Widths to 84"	144"	144"	144"	144"	108"	144"	144"	144"	144"	144"	144"
				For Shade Widths to 90"	138"	144"	138"	138"	108"	138"	138"	138"	144"	138"	144"
				For Shade Widths to 96"	108"	144"	108"	108"	108"	108"	108"	108"	144"	108"	144"
				For Shade Widths to 102"	84"	144"	84"	84"	84"	84"	84"	84"	144"	84"	144"
				For Shade Widths over 102"	NA	144"	NA	NA	NA	NA	NA	NA	144"	NA	120"
World Textures 2	80"	YES	YES	Non-Railroaded											
				Maximum Width	80"	80"	70"	70"	80"	80"	80"	80"	80"	80"	80"
					Maximum Height										
				For Shade Widths to 70"	144"	144"	138"	138"	84"	138"	120"	144"	144"	144"	144"
				For Shade Widths to 80"	144"	144"	NA	NA	84"	138"	120"	144"	144"	144"	144"
				Railroaded											
				Maximum Width	102"	144"	102"	102"	102"	102"	102"	102"	144"	102"	144"
					Maximum Height										
				For Shade Widths to 84"	144"	144"	138"	138"	84"	138"	120"	144"	144"	144"	144"
				For Shade Widths to 90"	138"	144"	138"	138"	84"	138"	120"	138"	144"	138"	144"
				For Shade Widths to 96"	108"	144"	108"	108"	84"	108"	108"	108"	144"	108"	144"
				For Shade Widths to 102"	84"	144"	84"	84"	84"	84"	84"	84"	144"	84"	144"
				For Shade Widths over 102"	NA	144"	NA	NA	NA	NA	NA	NA	144"	NA	90"
World Textures 2 Blackout	80"	YES	YES	Non-Railroaded											
				Maximum Width	80"	80"	70"	70"	80"	80"	80"	80"	80"	80"	80"
					Maximum Height										
				For Shade Widths to 70"	144"	144"	144"	144"	114"	144"	144"	144"	144"	144"	144"
				For Shade Widths to 80"	144"	144"	NA	NA	114"	144"	144"	144"	144"	144"	144"
				Railroaded											
				Maximum Width	102"	144"	102"	102"	102"	102"	102"	102"	144"	102"	144"
					Maximum Height										
				For Shade Widths to 84"	144"	144"	144"	144"	114"	144"	144"	144"	144"	144"	144"
				For Shade Widths to 90"	138"	144"	138"	138"	114"	138"	138"	138"	144"	138"	144"
				For Shade Widths to 96"	108"	144"	108"	108"	108"	108"	108"	108"	144"	108"	144"
				For Shade Widths to 102"	84"	144"	84"	84"	84"	84"	84"	84"	144"	84"	144"
				For Shade Widths over 102"	NA	144"	NA	NA	NA	NA	NA	NA	144"	NA	120"

MOUNTING REQUIREMENTS

INSIDE MOUNT	Minimum Mounting Depth	Flush Mounting Depth
Clutch Roller	1-1/4"	1-1/2"
TouchLift Cordless	1"	2"
Small Cassette Valance	1-1/2"	2-7/8"
Medium Cassette Valance	1-1/2"	3-3/4"
Large Cassette Valance	1-1/2"	4-3/8"
Deluxe Valance (with returns)	1 -7/8"	4-1/4"
Deluxe Valance (without returns)	1-1/4"	3-1/8"
Fabric Valance	3/4" + shade clearance	3/4" + shade clearance
3" Fascia (R series)	2-5/8"	3-1/8"
3" Fascia (Skyline)	2-3/4"	3-1/4"
4" Fascia (R series)	3-5/8"	4-1/16"
4" Fascia (Skyline)	3-3/8"	4-3/16"
Pocket Headrail	3-5/8"	4-9/16"
Exterior Shades without Cassette	2"	2-1/2"
Exterior Shades with Cassette	2-1/2"	4-1/4"

OUTSIDE MOUNT	Minimum Mounting Surface Height
Clutch Roller	1-3/4"
TouchLift Cordless	1-1/2"
Small Cassette Valance	2-3/4"
Medium Cassette Valance	3-1/8"
Large Cassette Valance	4"
Deluxe Valance	2"
Fabric Valance	3"
3" Fascia (R Series)	2-3/4"
3" Fascia (Skyline)	2-5/8"
4" Fascia (R Series)	3-3/16"
4" Fascia (Skyline)	2-3/4"
Pocket Headrail	3-3/4"
Exterior Shades with Cable Guide System	4"

TWO-ON-ONE SHADE SIZE STANDARDS*	
Minimum ordered width - Cassette Valance	16"
Maximum Ordered width - Cassette Valance	144"
Maximum Height	See Spec Chart
Center Gap	1/2"

* Two-on-One shade option is not available with Fascia Options.

Each shade cannot exceed the maximum single shade size allowed for cassette (see shade size specifications)

NOTE: Cassette valances cannot be added to inside mount roller shades after they have been manufactured. They will not fit within the IB measurements.

CLUTCHES

The Skyline™ System Clutches and Brackets from Rollease – standard on all shades (R-Series is optional)

Skyline

- Features a sleek, rounded profile that's more aesthetically pleasing
- Spring-loaded pin-end technology allows for more flexibility and ease of installation
- Internal spring arrangement provides a smoother feel when pulling the shade up and down
- Universal brackets – color coordinated to clutch (Black or White)
- Rounded end caps provide a more polished look

R-Series

- Traditional design
- Features traditional blade and end plug bracketing system
- Ideal for commercial applications

FINISHED DIMENSIONS

Adjustments are taken from ordered dimensions. Width and height may vary ± 1/8"

SKYLINE CLUTCH ROLLER SHADES

For all options below, Shade Height = Ordered Height

INSIDE MOUNT	
Shade Width	1/8" less than ordered width
Fabric & Tube Width *	1 1/8" less than ordered width

Fabric deduction can be up to 1-5/8" on large shades that use the SL20 or SL30 Clutch

INSIDE MOUNT - With Fabric Valance	
Valance Width	1/8" less than ordered width
Fabric & Tube Width *	1 1/8" less than ordered width

INSIDE MOUNT - With Deluxe Valance	
Valance Width (no returns)	1/8" less than ordered width
Valance Width (with returns)	1 1/8" **greater** than ordered width
Fabric & Tube Width *	1 1/8" less than ordered width

INSIDE MOUNT - With Small Cassette	
Cassette Width	1/8" less than ordered width
Fabric & Tube Width *	1-5/16" less than ordered width

INSIDE MOUNT - With Medium Cassette	
Cassette Width	1/8" less than ordered width
Fabric & Tube Width *	1-3/8" less than ordered width

INSIDE MOUNT - With Large Cassette	
Cassette Width	1/8" less than ordered width
Fabric & Tube Width *	1-3/8" less than ordered width

INSIDE MOUNT - With 3" and 4" Fascia	
Fascia Width	1/8" less than ordered width
Fabric & Tube Width *	1 1/8" less than ordered width

Fabric deduction can be up to 1-5/8" on large shades that use the SL20 or SL30 Clutch

INSIDE MOUNT - With 4" Pocket	
Pocket Width	1/8" less than ordered width
Fabric & Tube Width *	1 5/16" less than ordered width

Fabric deduction can be up to 1-5/8" on large shades that use the SL20 or SL30 Clutch

OUTSIDE MOUNT	
Shade Width	1/4" **greater** than ordered width
Fabric & Tube Width *	3/4" less than ordered width

Fabric deduction can be up to 1-5/8" on large shades that use the SL20 or SL30 Clutch

OUTSIDE MOUNT - With Fabric Valance	
Valance Width	1 - 3/4" **greater** than ordered width
Fabric & Tube Width *	7/8" less than ordered width

OUTSIDE MOUNT - With Deluxe Valance	
Valance Width (no returns)	1 1/4" **greater** than ordered width
Valance Width (with returns)	2 5/8" **greater** than ordered width
Fabric & Tube Width *	3/4" less than ordered width

OUTSIDE MOUNT - With Small Cassette	
Cassette Width	1/4" **greater** than ordered width
Fabric & Tube Width *	15/16" less than ordered width

OUTSIDE MOUNT - With Medium Cassette	
Cassette Width	1/4" **greater** than ordered width
Fabric & Tube Width *	1" less than ordered width

OUTSIDE MOUNT - With Large Cassette	
Cassette Width	1/4" **greater** than ordered width
Fabric & Tube Width *	1" less than ordered width

OUTSIDE MOUNT - With 3" and 4" Fascia	
Fascia Width	1/4" **greater** than ordered width
Fabric & Tube Width *	3/4" less than ordered width

Fabric deduction can be up to 1-5/8" on large shades that use the SL20 or SL30 Clutch

OUTSIDE MOUNT - With 4" Pocket	
Pocket Width	1/4" **greater** than ordered width
Fabric & Tube Width *	15/16" less than ordered width

Fabric deduction can be up to 1-5/8" on large shades that use the SL20 or SL30 Clutch

* Add +1/4 to Fabric Width for the Bottomrail Width including end caps

EXACT END TO END MOUNT	
Shade Width	ordered width
Fabric & Tube Width *	1" less than ordered width

Fabric deduction can be up to 1-7/8" on large shades that use the SL20 or SL30 Clutch

EXACT END TO END MOUNT - With Fabric Valance	
Valance Width	Ordered width
Fabric & Tube Width *	1" less than ordered width

Note: This mount type just apply to Valance of 3/4"

EXACT END TO END MOUNT - With Deluxe Valance	
Valance Width (no returns)	Ordered width
Valance Width (with returns)	N/A
Fabric & Tube Width *	1" less than ordered width

EXACT END TO END MOUNT - With Small Cassette	
Cassette Width	Ordered width
Fabric & Tube Width *	1- 3/16" less than ordered width

EXACT END TO END MOUNT - With Medium Cassette	
Cassette Width	Ordered width
Fabric & Tube Width *	1-1/4" less than ordered width

EXACT END TO END MOUNT - With Large Cassette	
Cassette Width	Ordered width
Fabric & Tube Width *	1-1/4" less than ordered width

EXACT END TO END MOUNT - With 3" and 4" Fascia	
Fascia Width	Ordered width
Fabric & Tube Width *	1" less than ordered width

Fabric deduction can be up to 1-7/8" on large shades that use the SL20 or SL30 Clutch

EXACT END TO END MOUNT - With 4" Pocket	
Pocket Width	ordered width
Fabric & Tube Width *	1-3/16" less than ordered width

Fabric deduction can be up to 1-7/8" on large shades that use the SL20 or SL30 Clutch

* Add +1/4 to Fabric Width for the Bottomrail Width including end caps

R SERIES CLUTCH ROLLER SHADES

For all options below, Shade Height = Ordered Height

INSIDE MOUNT	
Shade Width	1/8" less than ordered width
Fabric & Tube Width *	1-1/4" less than ordered width

Fabric deduction can be up to 1-5/8" on large shades

INSIDE MOUNT - With Fabric Valance	
Valance Width	1/8" less than ordered width
Fabric & Tube Width *	1 1/4" less than ordered width

INSIDE MOUNT - With Deluxe Valance	
Valance Width (no returns)	1/8" less than ordered width
Valance Width (with returns)	1 1/8" **greater** than ordered width
Fabric & Tube Width *	1-1/4" less than ordered width

INSIDE MOUNT - With Small Cassette	
Cassette Width	1/8" less than ordered width
Fabric & Tube Width *	1-1/16" less than ordered width

INSIDE MOUNT - With Medium Cassette	
Cassette Width	1/8" less than ordered width
Fabric & Tube Width *	1-1/8" less than ordered width

INSIDE MOUNT - With Large Cassette	
Cassette Width	1/8" less than ordered width
Fabric & Tube Width *	1-1/8" less than ordered width

INSIDE MOUNT - With 3" & 4" Fascia	
Fascia Width	1/8" less than ordered width
Fabric & Tube Width *	1-1/4" less than ordered width

Fabric deduction can be up to 1-5/8" on large shades

INSIDE MOUNT - With 4" Pocket	
Pocket Width	1/8" less than ordered width
Fabric & Tube Width *	1-13/16" less than ordered width

Fabric deduction can be up to 1-13/16" on large shades

OUTSIDE MOUNT	
Shade Width	1/4" **greater** than ordered width
Fabric & Tube Width *	7/8" less than ordered width

Fabric deduction can be up to 1-1/4" on large shades

OUTSIDE MOUNT - With Fabric Valance	
Valance Width	1 - 3/4" **greater** than ordered width
Fabric & Tube Width *	7/8" less than ordered width

OUTSIDE MOUNT - With Deluxe Valance	
Valance Width (no returns)	1 1/4" **greater** than ordered width
Valance Width (with returns)	2 5/8" **greater** than ordered width
Fabric & Tube Width *	7/8" less than ordered width

OUTSIDE MOUNT - With Small Cassette	
Cassette Width	1/4" **greater** than ordered width
Fabric & Tube Width *	11/16" less than ordered width

OUTSIDE MOUNT - With Medium Cassette	
Cassette Width	1/4" **greater** than ordered width
Fabric & Tube Width *	3/4" less than ordered width

OUTSIDE MOUNT - With Large Cassette	
Cassette Width	1/4" **greater** than ordered width
Fabric & Tube Width *	3/4" less than ordered width

OUTSIDE MOUNT - With 3" & 4" Fascia	
Fascia Width	1/4" **greater** than ordered width
Fabric & Tube Width *	7/8" less than ordered width

Fabric deduction can be up to 1-1/4" on large shades

OUTSIDE MOUNT - With 4" Pocket	
Pocket Width	1/4" **greater** than ordered width
Fabric & Tube Width *	1-7/16" less than ordered width

* Add +1/4 to Fabric Width for the Bottomrail Width including end caps

EXACT END TO END MOUNT	
Shade Width	ordered width
Fabric & Tube Width *	1-1/8" less than ordered width

Fabric deduction can be up to 1-1/4" on large shades

EXACT END TO END MOUNT - With Fabric Valance	
Valance Width	Ordered width
Fabric & Tube Width *	1-1/8" less than ordered width

Note: This mount type just apply to Valance of 3/4"

EXACT END TO END MOUNT - With Deluxe Valance	
Valance Width (no returns)	Ordered width
Valance Width (with returns)	N/A
Fabric & Tube Width *	1-1/8" less than ordered width

EXACT END TO END MOUNT - With Small Cassette	
Cassette Width	Ordered width
Fabric & Tube Width *	15/16" less than ordered width

EXACT END TO END MOUNT - With Medium Cassette	
Cassette Width	Ordered width
Fabric & Tube Width *	1" less than ordered width

EXACT END TO END MOUNT - With Large Cassette	
Cassette Width	Ordered width
Fabric & Tube Width *	1" less than ordered width

EXACT END TO END MOUNT - With 3" & 4" Fascia	
Fascia Width	Ordered width
Fabric & Tube Width *	1-1/8" less than ordered width

Fabric deduction can be up to 1-1/2" on large shades

EXACT END TO END MOUNT - With 4" Pocket	
Pocket Width	Ordered width
Fabric & Tube Width *	1-11/16" less than ordered width

* Add +1/4 to Fabric Width for the Bottomrail Width including end caps

FINISHED DIMENSIONS

Adjustments are taken from ordered dimensions. Width and height may vary ± 1/8"

TOUCHLIFT CORDLESS ROLLER SHADES

For all options below, Shade Height = Ordered Height

INSIDE MOUNT	
Shade Width	1/8" less than ordered width
Fabric Width *	3/4" less than ordered width
Tube Width	1-5/16" less than ordered width

INSIDE MOUNT - With Fabric Valance	
Valance Width	1/8" less than ordered width
Fabric Width *	3/4" less than ordered width
Tube Width	1-5/16" less than ordered width

INSIDE MOUNT - With Deluxe Valance	
Valance Width (no returns)	1/8" less than ordered width
Valance Width (with returns)	1 1/8" **greater** than ordered width
Fabric Width *	3/4" less than ordered width
Tube Width	1-5/16" less than ordered width

INSIDE MOUNT - With Medium Cassette	
Cassette Width	1/8" less than ordered width
Fabric Width *	1-1/16" less than ordered width
Tube Width	1-5/8" less than ordered width

INSIDE MOUNT - With Large Cassette	
Cassette Width	1/8" less than ordered width
Fabric Width *	1-1/16" less than ordered width
Tube Width	1-5/8" less than ordered width

OUTSIDE MOUNT	
Shade Width	Ordered width
Fabric Width *	5/8" less than ordered width
Tube Width	1-3/16" less than ordered width

OUTSIDE MOUNT - With Fabric Valance	
Valance Width	1 -1 / 2" **greater** than ordered width
Fabric Width *	5/8" less than ordered width
Tube Width	1-3/16" less than ordered width

OUTSIDE MOUNT - With Deluxe Valance	
Valance Width (no returns)	1" **greater** than ordered widht
Valance Width (with returns)	2 3/8 **greater** than ordered width
Fabric Width *	5/8" less than ordered width
Tube Width	1-3/16" less than ordered width

OUTSIDE MOUNT - With Medium Cassette	
Cassette Width	Ordered width
Fabric Width *	15/16" less than ordered width
Tube Width	1-1/2" less than ordered width

OUTSIDE MOUNT - With Large Cassette	
Cassette Width	Ordered width
Fabric Width *	15/16" less than ordered width
Tube Width	1-1/2" less than ordered width

* Add +1/4 to Fabric Width for the Bottomrail Width including end caps

EXACT END TO END MOUNT	
Shade Width	Ordered width
Fabric Width *	5/8" less than ordered width
Tube Width	1-3/16" less than ordered width

EXACT END TO END - With Fabric Valance	
Valance Width	Ordered width
Fabric Width *	5/8" less than ordered width
Tube Width	1-3/16" less than ordered width

Note: This mount type just apply to Valance of 3/4"

EXACT END TO END - With Deluxe Valance	
Valance Width (no returns)	Ordered width
Valance Width (with returns)	N/A
Fabric Width *	5/8" less than ordered width
Tube Width	1-3/16" less than ordered width

EXACT END TO END - With Medium Cassette	
Cassette Width	Ordered width
Fabric Width *	15/16" less than ordered width
Tube Width	1-1/2" less than ordered width

EXACT END TO END - With Large Cassette	
Cassette Width	Ordered width
Fabric Width *	15/16" less than ordered width
Tube Width	1-1/2" less than ordered width

* Add +1/4 to Fabric Width for the Bottomrail Width including end caps

FINISHED DIMENSIONS

Adjustments are taken from ordered dimensions. Width and height may vary ± 1/8"

PowerWand™ ROLLER SHADES

Rechargeable

For all options below, Shade Height = Ordered Height

INSIDE MOUNT	
Shade Width	1/8" less than ordered width
Fabric & Tube Width *	1-1/4" less than ordered width

INSIDE MOUNT - With Fabric Valance	
Valance Width	1/8" less than ordered width
Fabric & Tube Width *	1-3/8" less than ordered width

INSIDE MOUNT - With Deluxe Valance	
Valance Width (no returns)	1/8" less than ordered width
Valance Width (with returns)	1 1/8" **greater** than ordered width
Fabric & Tube Width *	1-1/4" less than ordered width

INSIDE MOUNT - With Medium Cassette	
Cassette Width	1/8" less than ordered width
Fabric & Tube Width *	1-1/2" less than ordered width

INSIDE MOUNT - With Large Cassette	
Cassette Width	1/8" less than ordered width
Fabric & Tube Width *	1-1/2" less than ordered width

OUTSIDE MOUNT	
Shade Width	1/4" **greater** than ordered width
Fabric & Tube Width *	1" less than ordered width

OUTSIDE MOUNT - With Fabric Valance	
Valance Width	1 -3/4" **greater** than ordered width
Fabric & Tube Width *	1" less than ordered width

OUTSIDE MOUNT - With Deluxe Valance	
Valance Width (no returns)	1 -1/4 **greater** than ordered width
Valance Width (with returns)	2 -5/8 **greater** than ordered width
Fabric & Tube Width *	7/8" less than ordered width

OUTSIDE MOUNT - With Medium Cassette	
Cassette Width	1/4" **greater** than ordered width
Fabric & Tube Width *	1-1/8" less than ordered width

OUTSIDE MOUNT - With Large Cassette	
Cassette Width	1/4" **greater** than ordered width
Fabric & Tube Width *	1-1/8" less than ordered width

EXACT END TO END MOUNT	
Shade Width	Ordered width
Fabric & Tube Width *	1-1/8" less than ordered width

EXACT END TO END MOUNT - With Fabric Valance	
Valance Width	Ordered width
Fabric & Tube Width *	1-1/4" less than ordered width

Note: This mount type just apply to Valance of 3/4"

EXACT END TO END MOUNT - With Deluxe Valance	
Valance Width (no returns)	Ordered width
Valance Width (with returns)	N/A
Fabric & Tube Width *	1-1/8" less than ordered width

EXACT END TO END MOUNT - With Medium Cassette	
Cassette Width	ordered width
Fabric & Tube Width *	1-3/8" less than ordered width

EXACT END TO END MOUNT - With Large Cassette	
Cassette Width	Ordered width
Fabric & Tube Width *	1-3/8" less than ordered width

* Add +1/4 to Fabric Width for the Bottomrail Width including end caps

SIMPLICITY MOTOR ROLLER SHADES

1.1 Nm Tubular Rechargeable Motor

For all options below, Shade Height = Ordered Height

INSIDE MOUNT	
Shade Width	1/8" less than ordered width
Fabric & Tube Width *	1-1/4" less than ordered width

INSIDE MOUNT - With Fabric Valance	
Valance Width	1/8" less than ordered width
Fabric & Tube Width *	1-3/8" less than ordered width

INSIDE MOUNT - With Deluxe Valance	
Valance Width (no returns)	1/8" less than ordered width
Valance Width (with returns)	1 1/8" **greater** than ordered width
Fabric & Tube Width *	1-1/4" less than ordered width

INSIDE MOUNT - With Medium Cassette	
Cassette Width	1/8" less than ordered width
Fabric & Tube Width *	1-1/2" less than ordered width

INSIDE MOUNT - With Large Cassette	
Cassette Width	1/8" less than ordered width
Fabric & Tube Width *	1-1/2" less than ordered width

OUTSIDE MOUNT	
Shade Width	1/4" **greater** than ordered width
Fabric & Tube Width *	1" less than ordered width

OUTSIDE MOUNT - With Fabric Valance	
Valance Width	1 -3/4" **greater** than ordered width
Fabric & Tube Width *	1" less than ordered width

OUTSIDE MOUNT - With Deluxe Valance	
Valance Width (no returns)	1 -1/4 **greater** than ordered width
Valance Width (with returns)	2 -5/8 **greater** than ordered width
Fabric & Tube Width *	7/8" less than ordered width

OUTSIDE MOUNT - With Medium Cassette	
Cassette Width	1/4" **greater** than ordered width
Fabric & Tube Width *	1-1/8" less than ordered width

OUTSIDE MOUNT - With Large Cassette	
Cassette Width	1/4" **greater** than ordered width
Fabric & Tube Width *	1-1/8" less than ordered width

EXACT END TO END MOUNT	
Shade Width	Ordered width
Fabric & Tube Width *	1-1/8" less than ordered width

EXACT END TO END MOUNT - With Fabric Valance	
Valance Width	Ordered width
Fabric & Tube Width *	1-1/4" less than ordered width

Note: This mount type just apply to Valance of 3/4"

EXACT END TO END MOUNT - With Deluxe Valance	
Valance Width (no returns)	Ordered width
Valance Width (with returns)	N/A
Fabric & Tube Width *	1-1/8" less than ordered width

EXACT END TO END MOUNT - With Medium Cassette	
Cassette Width	Ordered width
Fabric & Tube Width *	1-3/8" less than ordered width

EXACT END TO END MOUNT - With Large Cassette	
Cassette Width	Ordered width
Fabric & Tube Width *	1-3/8" less than ordered width

* Add +1/4 to Fabric Width for the Bottomrail Width including end caps

FINISHED DIMENSIONS

Adjustments are taken from ordered dimensions. Width and height may vary ± 1/8"

REMOTELIFT ROLLER SHADES

R28 / Soness 30 RTS

For all options below, Shade Height = Ordered Height

INSIDE MOUNT	
Shade Width	1/8" less than ordered width
Fabric & Tube Width *	1-1/4" less than ordered width

INSIDE MOUNT - With Fabric Valance	
Valance Width	1/8" less than ordered width
Fabric & Tube Width *	1-1/4" less than ordered width

INSIDE MOUNT - With Deluxe Valance	
Valance Width (no returns)	1/8" less than ordered width
Valance Width (with returns)	1 1/8 **greater** than ordered width
Fabric & Tube Width *	1-1/4" less than ordered width

INSIDE MOUNT - With Medium Cassette	
Cassette Width	1/8" less than ordered width
Fabric & Tube Width *	1-1/2" less than ordered width

INSIDE MOUNT - With Large Cassette	
Cassette Width	1/8" less than ordered width
Fabric & Tube Width *	1-1/2" less than ordered width

INSIDE MOUNT - With 3" and 4" Fascia	
Fascia Width	1/8" less than ordered width
Fabric & Tube Width *	1-1/4" less than ordered width

INSIDE MOUNT - With 4" Pocket	
Pocket Width	1/8" less than ordered width
Fabric & Tube Width *	1-7/16" less than ordered width

OUTSIDE MOUNT	
Shade Width	1/4" **greater** than ordered width
Fabric & Tube Width *	1" less than ordered width

OUTSIDE MOUNT - With Fabric Valance	
Valance Width	1 -1 / 2" **greater** than ordered width
Fabric & Tube Width *	7/8 less than ordered width

OUTSIDE MOUNT - With Deluxe Valance	
Valance Width (no returns)	1 1/4 **greater** than ordered width
Valance Width (with returns)	2 5/8 **greater** than ordered width
Fabric & Tube Width *	7/8 less than ordered width

OUTSIDE MOUNT - With Medium Cassette	
Cassette Width	1/4" **greater** than ordered width
Fabric & Tube Width *	1-1/8" less than ordered width

OUTSIDE MOUNT - With Large Cassette	
Cassette Width	1/4" **greater** than ordered width
Fabric & Tube Width *	1-1/8" less than ordered width

OUTSIDE MOUNT - With 3" and 4" Fascia	
Fascia Width	1/4" **greater** than ordered width
Fabric & Tube Width *	7/8" less than ordered width

OUTSIDE MOUNT - With 4" Pocket	
Pocket Width	1/4" **greater** than ordered width
Fabric & Tube Width *	1-1/16" less than ordered width

* Add +1/4 to Fabric Width for the Bottomrail Width including end caps

EXACT END TO END MOUNT	
Shade Width	Ordered width
Fabric & Tube Width *	1-1/8" less than ordered width

EXACT END TO END MOUNT - With Fabric Valance	
Valance Width	Ordered width
Fabric & Tube Width *	1 1/8 less than ordered width

Note: This mount type just apply for Valance of 3/4"

EXACT END TO END MOUNT - With Deluxe Valance	
Valance Width (no returns)	Ordered width
Valance Width (with returns)	N/A
Fabric & Tube Width *	1 1/8 less than ordered width

EXACT END TO END MOUNT - With Medium Cassette	
Cassette Width	Ordered width
Fabric & Tube Width *	1-3/8" less than ordered width

EXACT END TO END MOUNT - With Large Cassette	
Cassette Width	Ordered width
Fabric & Tube Width *	1-3/8" less than ordered width

EXACT END TO END MOUNT - With 3" and 4" Fascia	
Fascia Width	Ordered width
Fabric & Tube Width *	1-1/8" less than ordered width

EXACT END TO END MOUNT - With 4" Pocket	
Pocket Width	Ordered width
Fabric & Tube Width *	1-5/16" less than ordered width

* Add +1/4 to Fabric Width for the Bottomrail Width including end caps

MOTORIZED ROLLER SHADES

ST50 I ST50 UQ

For all options below, Shade Height = Ordered Height

INSIDE MOUNT	
Shade Width	1/8" less than ordered width
Fabric & Tube Width *	2-3/8" less than ordered width

Fabric deduction can be up to 2-5/8" on large shades

INSIDE MOUNT - With Fabric Valance	
Valance Width	N/A
Fabric & Tube Width *	N/A

INSIDE MOUNT - With Deluxe Valance	
Valance Width (no returns)	N/A
Valance Width (with returns)	N/A
Fabric & Tube Width *	N/A

INSIDE MOUNT - With 4" Fascia (R-Series)	
Fascia Width	1/8" less than ordered width
Fabric & Tube Width *	2-3/8" less than ordered width

Fabric deduction can be up to 2-5/8" on large shades

INSIDE MOUNT - With 4" Pocket	
Pocket Width	1/8" less than ordered width
Fabric & Tube Width *	2-9/16" less than ordered width

Fabric deduction can be up to 2-13/16" on large shades

OUTSIDE MOUNT	
Shade Width	1/4" greater than ordered width
Fabric & Tube Width *	2" less than ordered width

Fabric deduction can be up to 2-1/4" on large shades

OUTSIDE MOUNT - With Fabric Valance	
Valance Width	N/A
Fabric & Tube Width *	N/A

OUTSIDE MOUNT - With Deluxe Valance	
Valance Width (no returns)	N/A
Valance Width (with returns)	N/A
Fabric & Tube Width *	N/A

OUTSIDE MOUNT - With 4" Fascia (R-Series)	
Fascia Width	1/4" **greater** than ordered width
Fabric & Tube Width *	2" less than ordered width

Fabric deduction can be up to 2-1/4" on large shades

OUTSIDE MOUNT - With 4" Pocket	
Pocket Width	1/4" **greater** than ordered width
Fabric & Tube Width *	2-3/16" less than ordered width

Fabric deduction can be up to 2-7/16" on large shades

* Add +1/4 to Fabric Width for the Bottomrail Width including end caps

EXACT END TO END MOUNT	
Shade Width	Ordered width
Fabric & Tube Width *	2-1/4" less than ordered width

Fabric deduction can be up to 2-1/2" on large shades

EXACT END TO END MOUNT - With Fabric Valance	
Valance Width	N/A
Fabric & Tube Width *	N/A

EXACT END TO END MOUNT - With Deluxe Valance	
Valance Width (no returns)	N/A
Valance Width (with returns)	N/A
Fabric & Tube Width *	N/A

EXACT END TO END MOUNT - With 4" Fascia (R-Series)	
Fascia Width	Ordered width
Fabric & Tube Width *	2-1/4" less than ordered width

Fabric deduction can be up to 2-1/2" on large shades

EXACT END TO END MOUNT - With 4" Pocket	
Pocket Width	Ordered width
Fabric & Tube Width *	2-7/16" less than ordered width

Fabric deduction can be up to 2-11/16" on large shades

* Add +1/4 to Fabric Width for the Bottomrail Width including end caps

FINISHED DIMENSIONS

Adjustments are taken from ordered dimensions. Width and height may vary ± 1/8"

EXTERIOR ROLLER SHADES

For all options below, Shade Height = Ordered Height

INSIDE MOUNT	
Shade Width	1/8" less than ordered width
Fabric Width *	1-1/8" less than ordered width
Tube Width	1-1/8" less than ordered width

INSIDE MOUNT - With Large Cassette	
Cassette Width	1/8" less than ordered width
Fabric Width *	1-3/8" less than ordered width
Tube Width	1-3/8" less than ordered width

OUTSIDE MOUNT	
Shade Width	1/4" greater than ordered width
Fabric Width *	7/8" less than ordered width
Tube Width	7/8" less than ordered width

OUTSIDE MOUNT - With Large Cassette	
Cassette Width	1/4" greater than ordered width
Fabric Width *	1" less than ordered width
Tube Width	1" less than ordered width

EXACT END TO END MOUNT	
Shade Width	ordered width
Fabric Width *	1-1/8” less than ordered width
Tube Width	1-1/8" less than ordered width

EXACT END TO END MOUNT - With Large Cassette	
Cassette Width	ordered width
Fabric Width *	1 3/8” less than ordered width
Tube Width	1 3/8” less than ordered width

* Add +1/4 to Fabric Width for the Bottomrail Width including end caps

CABLE GUIDED EXTERIOR ROLLER SHADES

For all options below, Shade Height = Ordered Height

INSIDE MOUNT	
Shade Width	1/8" less than ordered width
Fabric Width *	1-3/8" less than ordered width
Tube Width	1-3/8" less than ordered width

INSIDE MOUNT - With Large Cassette	
Cassette Width	1/8" less than ordered width
Fabric Width *	1-5/8" less than ordered width
Tube Width	1-5/8" less than ordered width

OUTSIDE MOUNT	
Shade Width	1/4" greater than ordered width
Fabric Width *	1" less than ordered width
Tube Width	1" less than ordered width

OUTSIDE MOUNT - With Large Cassette	
Cassette Width	1/4" greater than ordered width
Fabric Width *	1-1/4" less than ordered width
Tube Width	1-1/4" less than ordered width

EXACT END TO END MOUNT	
Shade Width	ordered width
Fabric Width *	1-1/4” less than ordered width
Tube Width	1-1/4” less than ordered width

EXACT END TO END - With Large Cassette	
Cassette Width	ordered width
Fabric Width *	1-1/2” less than ordered width
Tube Width	1-1/2” less than ordered width

* Add +1/4 to Fabric Width for the Bottomrail Width including end caps

HARDWARE COLOR COORDINATION CHART

			Clutch Component Set				TouchLift Mounting Bar Component Set	
Material Name	Color Name	Color #	Beaded Chain & Tensioner	Clutch & End Plugs Universal Brackets	Fabric Wrapped Bottomrail	Bracket and/or Bracket Cover	Cordless Mounting Bar & Bracket	Fabric Wrapped Bottomrail
1% E Screen	Charcoal/Charcoal	R8009	BLACK	BLACK	BLACK	BLACK	BLACK	BLACK
1% E Screen	Charcoal/Cocoa	R8007	BLACK	BLACK	BLACK	BLACK	BLACK	BLACK
1% E Screen	Charcoal/Grey	R8008	BLACK	BLACK	BLACK	BLACK	BLACK	BLACK
1% E Screen	White	R8004	WHITE	WHITE	WHITE	WHITE	WHITE	WHITE
1% E Screen	White/Linen	R8005	WHITE	WHITE	WHITE	WHITE	WHITE	WHITE
1% E Screen	White/Pearl	R8003	WHITE	WHITE	WHITE	WHITE	WHITE	WHITE
1% Sheerweave 2500	Charcoal/Alpaca	R0109	BLACK	BLACK	BLACK	BLACK	BLACK	BLACK
1% Sheerweave 2500	Charcoal/Chestnut	R0104	BLACK	BLACK	BLACK	BLACK	BLACK	BLACK
1% Sheerweave 2500	Charcoal/Gray	R0103	BLACK	BLACK	BLACK	BLACK	BLACK	BLACK
1% Sheerweave 2500	Oyster	R0105	WHITE	WHITE	WHITE	WHITE	WHITE	WHITE
1% Sheerweave 2500	Oyster/Beige	R0106	WHITE	WHITE	WHITE	WHITE	WHITE	WHITE
1% Sheerweave 2500	Oyster/Pearl Gray	R0107	WHITE	WHITE	WHITE	WHITE	WHITE	WHITE
1% Sheerweave 2701	Oyster	RS2101	WHITE	WHITE	WHITE	WHITE	WHITE	WHITE
1% Sheerweave 2701	Oyster/Beige	RS2102	WHITE	WHITE	WHITE	WHITE	WHITE	WHITE
1% Sheerweave 2701	Oyster/Charcoal	RS2106	BLACK	BLACK	BLACK	BLACK	BLACK	BLACK
1% Sheerweave 2701	Oyster/Chestnut	RS2105	BLACK	BLACK	BLACK	BLACK	BLACK	BLACK
1% Sheerweave 2701	Oyster/Pearl Gray	RS2103	BLACK	BLACK	BLACK	BLACK	BLACK	BLACK
1% Sheerweave 2701	Oyster/Pewter	RS2104	BLACK	BLACK	BLACK	BLACK	BLACK	BLACK
1% Sheerweave 5000	Jute/Coffee	R0708	BLACK	BLACK	BLACK	BLACK	BLACK	BLACK
1% Sheerweave 5000	Jute/Flax	R0709	WHITE	WHITE	WHITE	WHITE	WHITE	WHITE
1% Toka	Bone	RS11002	WHITE	WHITE	WHITE	WHITE	WHITE	WHITE
1% Toka	Platinum	RS11003	WHITE	WHITE	WHITE	WHITE	WHITE	WHITE
1% Toka	White	RS11001	WHITE	WHITE	WHITE	WHITE	WHITE	WHITE
3% E Screen	Charcoal/Charcoal	R8102	BLACK	BLACK	BLACK	BLACK	BLACK	BLACK
3% E Screen	Charcoal/Cocoa	R8107	BLACK	BLACK	BLACK	BLACK	BLACK	BLACK
3% E Screen	Charcoal/Grey	R8108	BLACK	BLACK	BLACK	BLACK	BLACK	BLACK
3% E Screen	White/Linen	R8104	WHITE	WHITE	WHITE	WHITE	WHITE	WHITE
3% E Screen	White/Pearl	R8105	WHITE	WHITE	WHITE	WHITE	WHITE	WHITE
3% E Screen	White/White	R8106	WHITE	WHITE	WHITE	WHITE	WHITE	WHITE
3% M Screen	Charcoal/Apricot	R5803	BLACK	BLACK	BLACK	BLACK	BLACK	BLACK
3% M Screen	Charcoal/Charcoal	R5805	BLACK	BLACK	BLACK	BLACK	BLACK	BLACK
3% M Screen	Charcoal/Sable	R5808	BLACK	BLACK	BLACK	BLACK	BLACK	BLACK
3% M Screen	White Linen	R5807	WHITE	WHITE	WHITE	WHITE	WHITE	WHITE
3% M Screen	White/White	R5801	WHITE	WHITE	WHITE	WHITE	WHITE	WHITE
3% Sheerweave 2410	Charcoal	R0603	BLACK	BLACK	BLACK	BLACK	BLACK	BLACK
3% Sheerweave 2410	Charcoal/Alpaca	R0609	BLACK	BLACK	BLACK	BLACK	BLACK	BLACK
3% Sheerweave 2410	Charcoal/Chestnut	R0604	BLACK	BLACK	BLACK	BLACK	BLACK	BLACK
3% Sheerweave 2410	Oyster	R0605	WHITE	WHITE	WHITE	WHITE	WHITE	WHITE
3% Sheerweave 2410	Oyster/Beige	R0606	WHITE	WHITE	WHITE	WHITE	WHITE	WHITE
3% Sheerweave 2410	Oyster/Pearl Gray	R0607	WHITE	WHITE	WHITE	WHITE	WHITE	WHITE
3% Sheerweave 4400	Alabaster	RS2200	WHITE	WHITE	WHITE	WHITE	WHITE	WHITE
3% Sheerweave 4400	Chalk	RS2202	WHITE	WHITE	WHITE	WHITE	WHITE	WHITE
3% Sheerweave 4400	Greystone	RS2201	WHITE	WHITE	WHITE	WHITE	WHITE	WHITE
3% Sheerweave 4400	Pewter	RS2203	BLACK	BLACK	BLACK	BLACK	BLACK	BLACK
3% Sheerweave 5000	Bark/Sienna	R0710	BLACK	BLACK	BLACK	BLACK	BLACK	BLACK
3% Sheerweave 5000	Chenille/Honey	R0707	WHITE	WHITE	WHITE	WHITE	WHITE	WHITE
3% Sheerweave 5000	Linen/Cinnamon	R0702	BLACK	BLACK	BLACK	BLACK	BLACK	BLACK
3% Sheerweave 5000	Linen/Cream	R0704	WHITE	WHITE	WHITE	WHITE	WHITE	WHITE
3% Sheerweave 5000	Linen/Fig	R0705	BLACK	BLACK	BLACK	BLACK	BLACK	BLACK
3% T Screen	Charcoal/Charcoal	RS16005	BLACK	BLACK	BLACK	BLACK	BLACK	BLACK
3% T Screen	Charcoal/Grey	RS16006	BLACK	BLACK	BLACK	BLACK	BLACK	BLACK
3% T Screen	Sable/Charcoal	RS16003	BLACK	BLACK	BLACK	BLACK	BLACK	BLACK
3% T Screen	White/Pearl	RS16004	WHITE	WHITE	WHITE	WHITE	WHITE	WHITE
3% T Screen	White/Sable-Straw	RS16002	WHITE	WHITE	WHITE	WHITE	WHITE	WHITE
3% T Screen	White/White	RS16001	WHITE	WHITE	WHITE	WHITE	WHITE	WHITE
4% S Screen	Ginger	RS15006	BLACK	BLACK	BLACK	BLACK	BLACK	BLACK
4% S Screen	Granite	RS15004	BLACK	BLACK	BLACK	BLACK	BLACK	BLACK
4% S Screen	Papyrus	RS15003	BLACK	BLACK	BLACK	BLACK	BLACK	BLACK
4% S Screen	Porcelain	RS15001	WHITE	WHITE	WHITE	WHITE	WHITE	WHITE
4% S Screen	Sesame	RS15007	BLACK	BLACK	BLACK	BLACK	BLACK	BLACK

The default color for the clutches, end plugs, plastic beaded chains, tensioners, and bottomrail for all patterns is either black or white as indicated above. Vanilla and bronze plastic beaded chains and tensioners are also available as an option, and must be specified at time of order. White and vanilla chains and tensioners will be coordinated to white clutches, end plugs, and bottomrails. Bronze and black chains and tensioners will be coordinated to black clutches, end plugs, and bottomrails.

Antique brass, nickel, oil rubbed & stainless steel chains will not have similar color coordinated component set, to ensure color coordinate as desired, please review colors under each clutch components.

NOTE: There are no pre-set default colors for cassette valances, fascia, or optional Deluxe bottomrails. These colors must be specified when ordering. Default trims not selected for Phifer screen patterns.

HARDWARE COLOR COORDINATION CHART

			Clutch Component Set				TouchLift Mounting Bar Component Set	
Material Name	**Color Name**	**Color #**	**Beaded Chain & Tensioner**	**Clutch & End Plugs Universal Brackets**	**Fabric Wrapped Bottomrail**	**Bracket and/or Bracket Cover**	**Cordless Mounting Bar & Bracket**	**Fabric Wrapped Bottomrail**
4% Silver Screen	Beige	RS6501	WHITE	WHITE	WHITE	WHITE	WHITE	WHITE
4% Silver Screen	Black	RS6504	BLACK	BLACK	BLACK	BLACK	BLACK	BLACK
4% Silver Screen	Bronze	RS6503	BLACK	BLACK	BLACK	BLACK	BLACK	BLACK
4% Silver Screen	Light Grey	RS6500	WHITE	WHITE	WHITE	WHITE	WHITE	WHITE
4% Silver Screen	White	RS6502	WHITE	WHITE	WHITE	WHITE	WHITE	WHITE
5% E Screen	Charcoal/Charcoal	R5105	BLACK	BLACK	BLACK	BLACK	BLACK	BLACK
5% E Screen	Charcoal/Cocoa	R5104	BLACK	BLACK	BLACK	BLACK	BLACK	BLACK
5% E Screen	Charcoal/Grey	R5110	BLACK	BLACK	BLACK	BLACK	BLACK	BLACK
5% E Screen	Pure White	R5101	WHITE	WHITE	WHITE	WHITE	WHITE	WHITE
5% E Screen	White/Linen	R5108	WHITE	WHITE	WHITE	WHITE	WHITE	WHITE
5% E Screen	White/Pearl	R5109	WHITE	WHITE	WHITE	WHITE	WHITE	WHITE
5% M Screen Deco	Flagstone	R6107	BLACK	BLACK	BLACK	BLACK	BLACK	BLACK
5% M Screen Deco	Harvest Wheat	R6104	BLACK	BLACK	BLACK	BLACK	BLACK	BLACK
5% M Screen Deco	Hazelnut	R6105	BLACK	BLACK	BLACK	BLACK	BLACK	BLACK
5% M Screen Deco	Parchment	R6106	WHITE	WHITE	WHITE	WHITE	WHITE	WHITE
5% M Screen Deco	River Rock	R6102	WHITE	WHITE	WHITE	WHITE	WHITE	WHITE
5% M Screen Deco	Tumbleweed	R6103	WHITE	WHITE	WHITE	WHITE	WHITE	WHITE
5% Sheerweave 2390	Charcoal	RS1105	BLACK	BLACK	BLACK	BLACK	BLACK	BLACK
5% Sheerweave 2390	Charcoal/Alpaca	RS1106	BLACK	BLACK	BLACK	BLACK	BLACK	BLACK
5% Sheerweave 2390	Charcoal/Chestnut	RS1104	BLACK	BLACK	BLACK	BLACK	BLACK	BLACK
5% Sheerweave 2390	Charcoal/Gray	RS1102	BLACK	BLACK	BLACK	BLACK	BLACK	BLACK
5% Sheerweave 2390	Oyster	RS1100	WHITE	WHITE	WHITE	WHITE	WHITE	WHITE
5% Sheerweave 2390	Oyster/Beige	RS1101	WHITE	WHITE	WHITE	WHITE	WHITE	WHITE
5% Sheerweave 2390	Oyster/Pearl Gray	RS1103	WHITE	WHITE	WHITE	WHITE	WHITE	WHITE
5% Sheerweave 4000	Alabaster	R0901	WHITE	WHITE	WHITE	WHITE	WHITE	WHITE
5% Sheerweave 4000	Chalk	R0902	WHITE	WHITE	WHITE	WHITE	WHITE	WHITE
5% Sheerweave 4000	Granite	R0906	WHITE	WHITE	WHITE	WHITE	WHITE	WHITE
5% Sheerweave 4000	Greystone	R0904	WHITE	WHITE	WHITE	WHITE	WHITE	WHITE
5% Sheerweave 5000	Aura Sable	R1021	BLACK	BLACK	BLACK	BLACK	BLACK	BLACK
5% Sheerweave 5000	Bark/Ash	R1009	WHITE	WHITE	WHITE	WHITE	WHITE	WHITE
5% Sheerweave 5000	Bark/Pewter	R1010	WHITE	WHITE	WHITE	WHITE	WHITE	WHITE
5% Sheerweave 5000	Bark/Tiger Oak	R1001	BLACK	BLACK	BLACK	BLACK	BLACK	BLACK
5% Sheerweave 5000	Chenille/Driftwood	R1007	BLACK	BLACK	BLACK	BLACK	BLACK	BLACK
5% Sheerweave 5000	Contour Essence	R1017	WHITE	WHITE	WHITE	WHITE	WHITE	WHITE
5% Sheerweave 5000	Contour Natural	R1016	WHITE	WHITE	WHITE	WHITE	WHITE	WHITE
5% Sheerweave 5000	Contour Smoke	R1018	BLACK	BLACK	BLACK	BLACK	BLACK	BLACK
5% Sheerweave 5000	Linen/Pearl	R1014	WHITE	WHITE	WHITE	WHITE	WHITE	WHITE
5% Sheerweave 5000	Linen/Taupe	R1015	WHITE	WHITE	WHITE	WHITE	WHITE	WHITE*
5% Sheerweave 5000	Metro /Platinum	R1019	WHITE	WHITE	WHITE	WHITE	WHITE	WHITE*
5% Sheerweave 5000	Pavestone	R1020	WHITE	WHITE	WHITE	WHITE	WHITE	WHITE*
5% Sheerweave 5000	Tweed/Buckeye	R1003	BLACK	BLACK	BLACK	BLACK	BLACK	BLACK
5% Sheerweave 5000	Tweed/Oatmeal	R1006	WHITE	WHITE	WHITE	WHITE	WHITE	WHITE
5% Sheerweave 5000	Twine/Flagstone	R1012	BLACK	BLACK	BLACK	BLACK	BLACK	BLACK
5% Sheerweave 5000	Twine/Metal	R1013	BLACK	BLACK	BLACK	BLACK	BLACK	BLACK
5% Sheerweave 5000	Twine/Oatmeal	R1011	WHITE	WHITE	WHITE	WHITE	WHITE	WHITE
7% Global Screen	Barley	RS14002	WHITE	WHITE	WHITE	WHITE	WHITE	WHITE
7% Global Screen	Canvas	RS14001	WHITE	WHITE	WHITE	WHITE	WHITE	WHITE
7% Global Screen	Platinum	RS14003	WHITE	WHITE	WHITE	WHITE	WHITE	WHITE
7% Sheerweave 5000	Bamboo/Wheat	R1008	BLACK	BLACK	BLACK	BLACK	BLACK	BLACK
7% Sheerweave 5000	Bamboo White/Wheat	R3409	WHITE	WHITE	WHITE	WHITE	WHITE	WHITE
7% Sheerweave 5000	Linen/Clay	R3408	WHITE	WHITE	WHITE	WHITE	WHITE	WHITE
10% E Screen	Charcoal/Charcoal	R1902	BLACK	BLACK	BLACK	BLACK	BLACK	BLACK
10% E Screen	Charcoal/Cocoa	R1907	BLACK	BLACK	BLACK	BLACK	BLACK	BLACK
10% E Screen	White Pearl	R1908	WHITE	WHITE	WHITE	WHITE	WHITE	WHITE
10% E Screen	White/Linen	R1905	WHITE	WHITE	WHITE	WHITE	WHITE	WHITE
10% E Screen	White/White	R1906	WHITE	WHITE	WHITE	WHITE	WHITE	WHITE
10% Sheerweave 5000	Bamboo/Birch	R2603	WHITE	WHITE	WHITE	WHITE	WHITE	WHITE

* **STRONGLY RECOMMEND** Heat Sealed Hem as the Bottomrail option for **R1015, R1019, R1020** under 5% Sheerweave 5000 to improve appearance of the shade, and minimizing waviness.

The default color for the clutches, end plugs, plastic beaded chains, tensioners, and bottomrail for all patterns is either black or white as indicated above. Vanilla and bronze plastic beaded chains and tensioners are also available as an option, and must be specified at time of order. White and vanilla chains and tensioners will be coordinated to white clutches, end plugs, and bottomrails. Bronze and black chains and tensioners will be coordinated to black clutches, end plugs, and bottomrails.

Antique brass, nickel, oil rubbed & stainless steel chains will not have similar color coordinated component set, to ensure color coordinate as desired, please review colors under each clutch components.

NOTE: There are no pre-set default colors for cassette valances, fascia, or optional Deluxe bottomrails. These colors must be specified when ordering. Default trims not selected for Phifer screen patterns.

HARDWARE COLOR COORDINATION CHART

			Clutch Component Set				TouchLift Mounting Bar Component Set	
Material Name	**Color Name**	**Color #**	**Beaded Chain & Tensioner**	**Clutch & End Plugs Universal Brackets**	**Fabric Wrapped Bottomrail**	**Bracket and/or Bracket Cover**	**Cordless Mounting Bar & Bracket**	**Fabric Wrapped Bottomrail**
Alexandria	Charcoal	RD403	WHITE	WHITE	WHITE	WHITE	WHITE	WHITE
Alexandria	Duck Egg	RD402	WHITE	WHITE	WHITE	WHITE	WHITE	WHITE
Alexandria	Oatmeal	RD401	WHITE	WHITE	WHITE	WHITE	WHITE	WHITE
Astaire	Grey	RF42004	WHITE	WHITE	WHITE	WHITE	WHITE	WHITE
Astaire	Ivory	RF42002	WHITE	WHITE	WHITE	WHITE	WHITE	WHITE
Astaire	White	RF42001	WHITE	WHITE	WHITE	WHITE	WHITE	WHITE
Avila R Blackout	Canvas	RB703	WHITE	WHITE	N/A (Sealed Hem only)	WHITE	WHITE	N/A (Sealed Hem only)
Avila R Blackout	Chalk	RB702	WHITE	WHITE	N/A (Sealed Hem only)	WHITE	WHITE	N/A (Sealed Hem only)
Avila R Blackout	Charcoal	RB708	BLACK	BLACK	N/A (Sealed Hem only)	BLACK	BLACK	N/A (Sealed Hem only)
Avila R Blackout	Khaki	RB705	WHITE	WHITE	N/A (Sealed Hem only)	WHITE	WHITE	N/A (Sealed Hem only)
Avila R Blackout	Linen	RB704	WHITE	WHITE	N/A (Sealed Hem only)	WHITE	WHITE	N/A (Sealed Hem only)
Avila R Blackout	Marine	RB706	BLACK	BLACK	N/A (Sealed Hem only)	BLACK	BLACK	N/A (Sealed Hem only)
Avila R Blackout	Onyx	RB709	BLACK	BLACK	N/A (Sealed Hem only)	BLACK	BLACK	N/A (Sealed Hem only)
Avila R Blackout	Pewter	RB707	BLACK	BLACK	N/A (Sealed Hem only)	BLACK	BLACK	N/A (Sealed Hem only)
Avila R Blackout	White	RB701	WHITE	WHITE	N/A (Sealed Hem only)	WHITE	WHITE	N/A (Sealed Hem only)
Baroque	Champagne	RD501	WHITE	WHITE	WHITE	WHITE	WHITE	WHITE
Baroque	Cyan	RD502	BLACK	BLACK	BLACK	BLACK	BLACK	BLACK
Baroque	Ebony	RD504	BLACK	BLACK	BLACK	BLACK	BLACK	BLACK
Baroque	Ruby	RD503	BLACK	BLACK	BLACK	BLACK	BLACK	BLACK
Blackout - Solid	Alabaster	R4011	WHITE	WHITE	WHITE	WHITE	WHITE	WHITE
Blackout - Solid	Bone	R4005	WHITE	WHITE	WHITE	WHITE	WHITE	WHITE
Blackout - Solid	Buff	R4008	WHITE	WHITE	WHITE	WHITE	WHITE	WHITE
Blackout - Solid	Oyster	R4006	WHITE	WHITE	WHITE	WHITE	WHITE	WHITE
Blackout - Solid	White	R4001	WHITE	WHITE	WHITE	WHITE	WHITE	WHITE
Brilliance	Birch	RD802	WHITE	WHITE	WHITE	WHITE	WHITE	WHITE
Brilliance	Dove Gray	RD804	BLACK	BLACK	BLACK	BLACK	BLACK	BLACK
Brilliance	Pearl	RD801	WHITE	WHITE	WHITE	WHITE	WHITE	WHITE
Brilliance	Putty	RD803	WHITE	WHITE	WHITE	WHITE	WHITE	WHITE
Brilliance	Pyrite	RD805	BLACK	BLACK	BLACK	BLACK	BLACK	BLACK
Brilliance	Steel	RD806	BLACK	BLACK	BLACK	BLACK	BLACK	BLACK
Brilliance Blackout	Birch	RB602	WHITE	WHITE	WHITE	WHITE	WHITE	WHITE
Brilliance Blackout	Dove Gray	RB604	BLACK	BLACK	BLACK	BLACK	BLACK	BLACK
Brilliance Blackout	Pearl	RB601	WHITE	WHITE	WHITE	WHITE	WHITE	WHITE
Brilliance Blackout	Putty	RB603	WHITE	WHITE	WHITE	WHITE	WHITE	WHITE
Brilliance Blackout	Pyrite	RB605	BLACK	BLACK	BLACK	BLACK	BLACK	BLACK
Brilliance Blackout	Steel	RB606	BLACK	BLACK	BLACK	BLACK	BLACK	BLACK
Carrara	Coal	RD606	BLACK	BLACK	BLACK	BLACK	BLACK	BLACK
Carrara	Saddle	RD604	BLACK	BLACK	BLACK	BLACK	BLACK	BLACK
Carrara	Silver	RD603	WHITE	WHITE	WHITE	WHITE	WHITE	WHITE
Carrara	Storm	RD605	BLACK	BLACK	BLACK	BLACK	BLACK	BLACK
Carrara	Tusk	RD602	WHITE	WHITE	WHITE	WHITE	WHITE	WHITE
Carrara	White	RD601	WHITE	WHITE	WHITE	WHITE	WHITE	WHITE
Carrara Blackout	Coal	RB406	BLACK	BLACK	BLACK	BLACK	BLACK	BLACK
Carrara Blackout	Saddle	RB404	BLACK	BLACK	BLACK	BLACK	BLACK	BLACK
Carrara Blackout	Silver	RB403	WHITE	WHITE	WHITE	WHITE	WHITE	WHITE
Carrara Blackout	Storm	RB405	BLACK	BLACK	BLACK	BLACK	BLACK	BLACK
Carrara Blackout	Tusk	RB402	WHITE	WHITE	WHITE	WHITE	WHITE	WHITE
Carrara Blackout	White	RB401	WHITE	WHITE	WHITE	WHITE	WHITE	WHITE
Claudio	Ash	RD706	BLACK	BLACK	BLACK	BLACK	BLACK	BLACK
Claudio	Cloud	RD701	WHITE	WHITE	WHITE	WHITE	WHITE	WHITE
Claudio	Cream	RD702	WHITE	WHITE	WHITE	WHITE	WHITE	WHITE
Claudio	Gray Matters	RD708	BLACK	BLACK	BLACK	BLACK	BLACK	BLACK
Claudio	Mink	RD704	WHITE	WHITE	WHITE	WHITE	WHITE	WHITE
Claudio	Mist	RD703	WHITE	WHITE	WHITE	WHITE	WHITE	WHITE
Claudio	Reef	RD705	BLACK	BLACK	BLACK	BLACK	BLACK	BLACK
Claudio	Sailcloth	RD707	WHITE	WHITE	WHITE	WHITE	WHITE	WHITE

The default color for the clutches, end plugs, plastic beaded chains, tensioners, and bottomrail for all patterns is either black or white as indicated above. Vanilla and bronze plastic beaded chains and tensioners are also available as an option, and must be specified at time of order. White and vanilla chains and tensioners will be coordinated to white clutches, end plugs, and bottomrails. Bronze and black chains and tensioners will be coordinated to black clutches, end plugs, and bottomrails.

Antique brass, nickel, oil rubbed & stainless steel chains will not have similar color coordinated component set, to ensure color coordinate as desired, please review colors under each clutch components.

NOTE: There are no pre-set default colors for cassette valances, fascia, or optional Deluxe bottomrails. These colors must be specified when ordering. Default trims not selected for Phifer screen patterns.

HARDWARE COLOR COORDINATION CHART

			Clutch Component Set				TouchLift Mounting Bar Component Set	
Material Name	**Color Name**	**Color #**	**Beaded Chain & Tensioner**	**Clutch & End Plugs Universal Brackets**	**Fabric Wrapped Bottomrail**	**Bracket and/or Bracket Cover**	**Cordless Mounting Bar & Bracket**	**Fabric Wrapped Bottomrail**
Claudio Blackout	Ash	RB506	BLACK	BLACK	BLACK	BLACK	BLACK	BLACK
Claudio Blackout	Cloud	RB501	WHITE	WHITE	WHITE	WHITE	WHITE	WHITE
Claudio Blackout	Cream	RB502	WHITE	WHITE	WHITE	WHITE	WHITE	WHITE
Claudio Blackout	Mink	RB504	WHITE	WHITE	WHITE	WHITE	WHITE	WHITE
Claudio Blackout	Mist	RB503	WHITE	WHITE	WHITE	WHITE	WHITE	WHITE
Claudio Blackout	Reef	RB505	BLACK	BLACK	BLACK	BLACK	BLACK	BLACK
Cusco	Chateau	RF6400	WHITE	WHITE	WHITE	WHITE	WHITE	WHITE
Cusco	Coconut Husk	RF6401	BLACK	BLACK	BLACK	BLACK	BLACK	BLACK
Cusco	Shadow Ridge	RF6402	BLACK	BLACK	BLACK	BLACK	BLACK	BLACK
Darien	Bark	RD106	BLACK	BLACK	BLACK	BLACK	BLACK	BLACK
Darien	Beige	RD101	WHITE	WHITE	WHITE	WHITE	WHITE	WHITE
Darien	Charcoal	RD107	BLACK	BLACK	BLACK	BLACK	BLACK	BLACK
Darien	Driftwood	RD103	BLACK	BLACK	BLACK	BLACK	BLACK	BLACK
Darien	Mocha	RD104	BLACK	BLACK	BLACK	BLACK	BLACK	BLACK
Darien	Sand	RD102	BLACK	BLACK	BLACK	BLACK	BLACK	BLACK
Darien	Sea Mist	RD105	BLACK	BLACK	BLACK	BLACK	BLACK	BLACK
Drizzle	Flax	RD201	WHITE	WHITE	WHITE	WHITE	WHITE	WHITE
Drizzle	Graphite	RD205	BLACK	BLACK	BLACK	BLACK	BLACK	BLACK
Drizzle	Hessian	RD202	WHITE	WHTIE	WHITE	WHITE	WHITE	WHTIE
Drizzle	Iron	RD204	WHITE	WHITE	WHITE	WHITE	WHITE	WHITE
Drizzle	Tweed	RD203	BLACK	BLACK	BLACK	BLACK	BLACK	BLACK
Fiona	Grey	RD303	WHITE	WHITE	WHITE	WHITE	WHITE	WHITE
Fiona	Sand	RD301	WHITE	WHITE	WHITE	WHITE	WHITE	WHITE
Fiona	Smokey Blue	RD302	WHITE	WHITE	WHITE	WHITE	WHITE	WHITE
Flocke Blackout	Chartreux	R9205	WHITE	WHITE	WHITE	WHITE	WHITE	WHITE
Flocke Blackout	Crystal	R9204	WHITE	WHITE	WHITE	WHITE	WHITE	WHITE
Flocke Blackout	Sea Cliff	R9202	WHITE	WHITE	WHITE	WHITE	WHITE	WHITE
Flocke Blackout	Spun Silk	R9203	WHITE	WHITE	WHITE	WHITE	WHITE	WHITE
Hayworth	Linen	RF32001	WHITE	WHITE	WHITE	WHITE	WHITE	WHITE
Hayworth	White	RF32000	WHITE	WHITE	WHITE	WHITE	WHITE	WHITE
Illusion	Dove	RF34003	WHITE	WHITE	WHITE	WHITE	WHITE	WHITE
Illusion	Flannel	RF34004	BLACK	BLACK	BLACK	BLACK	BLACK	BLACK
Illusion	Ivory	RF34002	WHITE	WHITE	WHITE	WHITE	WHITE	WHITE
Illusion	Snow	RF34001	WHITE	WHITE	WHITE	WHITE	WHITE	WHITE
Jasper	Country Linen	RF5303	WHITE	WHITE	WHITE	WHITE	WHITE	WHITE
Jasper	Heather	RF5302	WHITE	WHITE	WHITE	WHITE	WHITE	WHITE
Jasper	Storm Cloud	RF5300	BLACK	BLACK	BLACK	BLACK	BLACK	BLACK
Jasper	Tweed	RF5301	BLACK	BLACK	BLACK	BLACK	BLACK	BLACK
Linview	Ash	R5613	WHITE	WHITE	WHITE	WHITE	WHITE	WHITE
Linview	Cabana Wood	R5603	WHITE	WHITE	WHITE	WHITE	WHITE	WHITE
Linview	Fog	R5611	WHITE	WHITE	WHITE	WHITE	WHITE	WHITE
Linview	Macadamia	R5606	WHITE	WHITE	WHITE	WHITE	WHITE	WHITE
Linview	Midnight Blck	R5615	BLACK	BLACK	BLACK	BLACK	BLACK	BLACK
Linview	Morning Light	R5602	WHITE	WHITE	WHITE	WHITE	WHITE	WHITE
Linview	Navy	R5610	BLACK	BLACK	BLACK	BLACK	BLACK	BLACK
Linview	New York Grey	R5614	BLACK	BLACK	BLACK	BLACK	BLACK	BLACK
Linview	Pale Lapis	R5609	BLACK	BLACK	BLACK	BLACK	BLACK	BLACK
Linview	Porpoise	R5612	WHITE	WHITE	WHITE	WHITE	WHITE	WHITE
Linview	Rural Green	R5607	WHITE	WHITE	WHITE	WHITE	WHITE	WHITE
Linview	Skyward	R5608	WHITE	WHITE	WHITE	WHITE	WHITE	WHITE
Linview	Slate	R5605	BLACK	BLACK	BLACK	BLACK	BLACK	BLACK
Linview	Summer White	R5601	WHITE	WHITE	WHITE	WHITE	WHITE	WHITE
Linview	Weathered Walnut	R5604	WHITE	WHITE	WHITE	WHITE	WHITE	WHITE

The default color for the clutches, end plugs, plastic beaded chains, tensioners, and bottomrail for all patterns is either black or white as indicated above. Vanilla and bronze plastic beaded chains and tensioners are also available as an option, and must be specified at time of order. White and vanilla chains and tensioners will be coordinated to white clutches, end plugs, and bottomrails. Bronze and black chains and tensioners will be coordinated to black clutches, end plugs, and bottomrails.

Antique brass, nickel, oil rubbed & stainless steel chains will not have similar color coordinated component set, to ensure color coordinate as desired, please review colors under each clutch components.

NOTE: There are no pre-set default colors for cassette valances, fascia, or optional Deluxe bottomrails. These colors must be specified when ordering. Default trims not selected for Phifer screen patterns.

HARDWARE COLOR COORDINATION CHART

			Clutch Component Set				TouchLift Mounting Bar Component Set	
Material Name	**Color Name**	**Color #**	**Beaded Chain & Tensioner**	**Clutch & End Plugs Universal Brackets**	**Fabric Wrapped Bottomrail**	**Bracket and/or Bracket Cover**	**Cordless Mounting Bar & Bracket**	**Fabric Wrapped Bottomrail**
Linview Blackout	Alabaster	RB302	WHITE	WHITE	N/A (Sealed Hem only)	WHITE	WHITE	N/A (Sealed Hem only)
Linview Blackout	Café Crème	RB303	WHITE	WHITE	N/A (Sealed Hem only)	WHITE	WHITE	N/A (Sealed Hem only)
Linview Blackout	Collonade Gray	RB306	BLACK	BLACK	N/A (Sealed Hem only)	BLACK	BLACK	N/A (Sealed Hem only)
Linview Blackout	Gauntlet Gray	RB309	WHITE	WHITE	N/A (Sealed Hem only)	WHITE	WHITE	N/A (Sealed Hem only)
Linview Blackout	Pale Gray	RB307	WHITE	WHITE	N/A (Sealed Hem only)	WHITE	WHITE	N/A (Sealed Hem only)
Linview Blackout	Pure White	RB301	WHITE	WHITE	N/A (Sealed Hem only)	WHITE	WHITE	N/A (Sealed Hem only)
Linview Blackout	Stone	RB304	WHITE	WHITE	N/A (Sealed Hem only)	WHITE	WHITE	N/A (Sealed Hem only)
Linview Blackout	Tranquility	RB305	BLACK	BLACK	N/A (Sealed Hem only)	BLACK	BLACK	N/A (Sealed Hem only)
Linview Blackout	Whale	RB308	BLACK	BLACK	N/A (Sealed Hem only)	BLACK	BLACK	N/A (Sealed Hem only)
Montero	Dark Walnut	RF4200	BLACK	BLACK	BLACK	BLACK	BLACK	BLACK
Montero	Java Coast	RF4201	BLACK	BLACK	BLACK	BLACK	BLACK	BLACK
Montero	Wicker Basket	RF4202	WHITE	WHITE	WHITE	WHITE	WHITE	WHITE
Moravia	Coastal	RF8602	WHITE	WHITE	WHITE	WHITE	WHITE	WHITE
Moravia	Countryside	RF8600	BLACK	BLACK	BLACK	BLACK	BLACK	BLACK
Moravia	Seabreeze	RF8601	WHITE	WHITE	WHITE	WHITE	WHITE	WHITE
Santa Cruz	Bunglehouse Blue	RF3101	BLACK	BLACK	BLACK	BLACK	BLACK	BLACK
Santa Cruz	Manchester	RF3100	WHITE	WHITE	WHITE	WHITE	WHITE	WHITE
Santa Cruz	Night Sky	RF3106	BLACK	BLACK	BLACK	BLACK	BLACK	BLACK
Santa Cruz	Rainforest	RF3107	BLACK	BLACK	BLACK	BLACK	BLACK	BLACK
Santa Cruz Blackout	Bunglehouse Blue	RB102	BLACK	BLACK	BLACK	BLACK	BLACK	BLACK
Santa Cruz Blackout	Manchester	RB101	WHITE	WHITE	WHITE	WHITE	WHITE	WHITE
Santa Cruz Blackout	Night Sky	RB104	BLACK	BLACK	BLACK	BLACK	BLACK	BLACK
Santa Cruz Blackout	Rainforest	RB103	BLACK	BLACK	BLACK	BLACK	BLACK	BLACK
Scala Blackout	Gray	R10005	WHITE	WHITE	N/A (Sealed Hem only)	WHITE	WHITE	N/A (Sealed Hem only)
Scala Blackout	Off White	R10002	WHITE	WHITE	N/A (Sealed Hem only)	WHITE	WHITE	N/A (Sealed Hem only)
Scala Blackout	Silver	R10004	WHITE	WHITE	N/A (Sealed Hem only)	WHITE	WHITE	N/A (Sealed Hem only)
Scala Blackout	White	R10001	WHITE	WHITE	N/A (Sealed Hem only)	WHITE	WHITE	N/A (Sealed Hem only)
Sorrento	Bisque	RF35002	WHITE	WHITE	WHITE	WHITE	WHITE	WHITE
Sorrento	Linen	RF35001	WHITE	WHITE	WHITE	WHITE	WHITE	WHITE
Sorrento	Stucco	RF35003	WHITE	WHITE	WHITE	WHITE	WHITE	WHITE
Sunscreen 7000	Birch	R1101	WHITE	WHITE	WHITE	WHITE	WHITE	WHITE
Sunscreen 7000	Graphite	R1107	BLACK	BLACK	BLACK	BLACK	BLACK	BLACK
Sunscreen 7000	Mushroom	R1102	BLACK	BLACK	BLACK	BLACK	BLACK	BLACK
Sunscreen 7000	Onyx	R1103	BLACK	BLACK	BLACK	BLACK	BLACK	BLACK
Sunscreen 7000	Sand	R1104	WHITE	WHITE	WHITE	WHITE	WHITE	WHITE
Sunscreen 7000	White	R1106	WHITE	WHITE	WHITE	WHITE	WHITE	WHITE
Uptown	Sterling	R7902	WHITE	WHITE	WHITE	WHITE	WHITE	WHITE
Uptown	Sterling Room Darkening	R7901	WHITE	WHITE	WHITE	WHITE	WHITE	WHITE
World Textures 1	Cyprus Coast	R4802	WHITE	WHITE	WHITE	WHITE	WHITE	WHITE
World Textures 1	Medina Mirage	R4803	WHITE	WHITE	WHITE	WHITE	WHITE	WHITE
World Textures 1	Medina Vision	R4806	WHITE	WHITE	WHITE	WHITE	WHITE	WHITE
World Textures 1 Blackout	Cypress Formal	R5001	WHITE	WHITE	WHITE	WHITE	WHITE	WHITE
World Textures 2	Oslo Blend	R4902	WHITE	WHITE	WHITE	WHITE	WHITE	WHITE
World Textures 2 Blackout	Oslo Terrain	R5004	WHITE	WHITE	WHITE	WHITE	WHITE	WHITE

The default color for the clutches, end plugs, plastic beaded chains, tensioners, and bottomrail for all patterns is either black or white as indicated above. Vanilla and bronze plastic beaded chains and tensioners are also available as an option, and must be specified at time of order. White and vanilla chains and tensioners will be coordinated to white clutches, end plugs, and bottomrails. Bronze and black chains and tensioners will be coordinated to black clutches, end plugs, and bottomrails.

Antique brass, nickel, oil rubbed & stainless steel chains will not have similar color coordinated component set, to ensure color coordinate as desired, please review colors under each clutch components.

NOTE: There are no pre-set default colors for cassette valances, fascia, or optional Deluxe bottomrails. These colors must be specified when ordering. Default trims not selected for Phifer screen patterns.

The following pages contain solar optical information by pattern and color, it is important to understand the numbers and how they work best to your advantage.

OPENNESS FACTOR (OF):

OF is a property that is often used to describe a screen material. The definition of OF is the percentage of the screen's surface area that is “open". The OF only describes one of the factors that regulates the amount of light passing through a roller shade. Blackout provides the most privacy, followed by 1%, Translucent, then 3%. Increasingly, 5%, 10%, then Transparent provide the least amount of privacy.

The OF and color coating will together decide how open the (shade) material will become. Different material colors absorb light differently. For example, a dark colored car is hotter than a light colored car on a sunny summer day.

Sunlight that hits the shade surface is divided into three parts that together make 100 % of the incoming light. The picture below illustrates the phenomenon.

TRANSMISSION: One part of the light will pass through the shade, and that is the part of the light that comes into the room. *The lower the number, the better.*

The transmission value tells how much light passes through the fabric. The transmission is dependent on three factors;
- the openness factor of the fabric
- the color of the fabric
- the coating on the fabric.

REFLECTION: One part of the light will be reflected when it hits the shade. *The higher the number, the better.*

ABSORPTION: The rest of the light will be absorbed by the shade. *The lower the number, the better.*

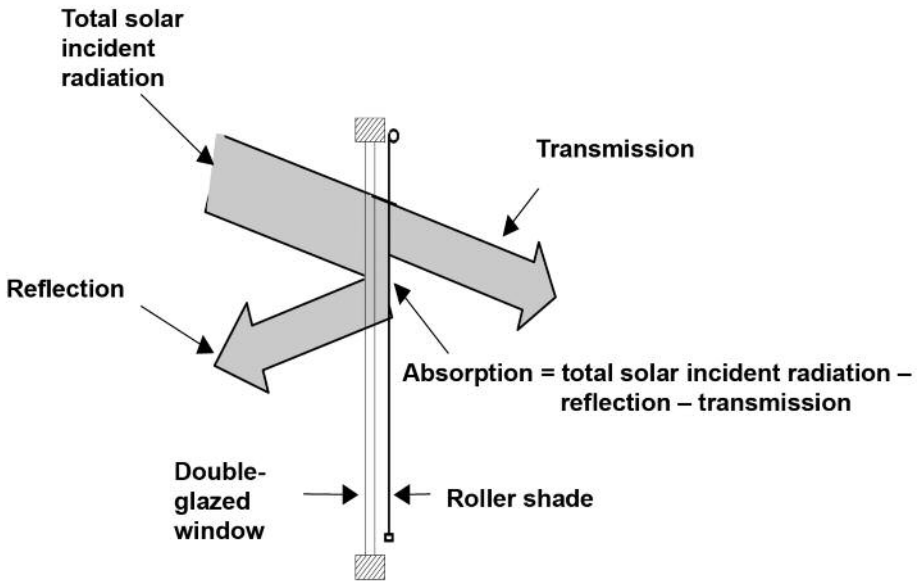

UV PROTECTION (and Blackout Fabrics): The total solar incident radiation of wavelengths between 280 nm and 2500 nm is measured and optical values are reported. UV-light is included in these wavelengths. For those of our fabrics that are Blackout the transmission of light is 0 %. This signifies 100 % blocking of all sunlight, including UV-light. The UV-protection is 100 % for the fabric. In order to get complete blocking of the light the fabric has to be fitted so that no light is transmitted on the sides of the fabric. *The higher the number, the better.*

SOLAR OPTICAL CHART

Material Name	Color Name	Color #	Openness Factor*	Transmission*	Reflection*	Absorption*	UV Rating*
1% E Screen	Charcoal/Charcoal	R8009	1%	1	4	95	99.00%
1% E Screen	Charcoal/Cocoa	R8007	1%	2	5	93	99.00%
1% E Screen	Charcoal/Grey	R8008	1%	3	9	88	99.00%
1% E Screen	White	R8004	1%	14	75	11	99.00%
1% E Screen	White/Linen	R8005	1%	14	66	20	99.00%
1% E Screen	White/Pearl	R8003	1%	9	58	33	99.00%
1% Sheerweave 2500	Charcoal/Alpaca	R0109	1%	1	16	83	99.00%
1% Sheerweave 2500	Charcoal/Chestnut	R0104	1%	1	6	93	99.00%
1% Sheerweave 2500	Charcoal/Gray	R0103	1%	2	8	90	99.00%
1% Sheerweave 2500	Oyster	R0105	1%	15	68	17	99.00%
1% Sheerweave 2500	Oyster/Beige	R0106	1%	10	60	30	99.00%
1% Sheerweave 2500	Oyster/Pearl Gray	R0107	1%	7	50	43	99.00%
1% Sheerweave 2701	Oyster	RS2101	1%	21	64	15	99.00%
1% Sheerweave 2701	Oyster/Beige	RS2102	1%	15	57	28	99.00%
1% Sheerweave 2701	Oyster/Charcoal	RS2106	1%	6	41	53	99.00%
1% Sheerweave 2701	Oyster/Chestnut	RS2105	1%	6	41	53	99.00%
1% Sheerweave 2701	Oyster/Pearl Gray	RS2103	1%	8	54	38	99.00%
1% Sheerweave 2701	Oyster/Pewter	RS2104	1%	6	43	51	99.00%
1% Sheerweave 5000	Jute/Coffee	R0708	1%	5	15	80	99.00%
1% Sheerweave 5000	Jute/Flax	R0709	1%	30	56	14	99.00%
1% Toka	Bone	RS11002	1%	16	59	25	99.00%
1% Toka	Platinum	RS11003	1%	10	47	43	99.00%
1% Toka	White	RS11001	1%	19	66	15	99.00%
3% E Screen	Charcoal/Charcoal	R8102	3%	5	4	91	97.00%
3% E Screen	Charcoal/Cocoa	R8107	3%	4	7	89	97.00%
3% E Screen	Charcoal/Grey	R8108	3%	5	10	85	97.00%
3% E Screen	White/Linen	R8104	3%	16	63	21	97.00%
3% E Screen	White/Pearl	R8105	3%	10	52	38	97.00%
3% E Screen	White/White	R8106	3%	16	73	11	97.00%
3% M Screen	Charcoal/Apricot	R5803	3%	5	13	82	97.00%
3% M Screen	Charcoal/Charcoal	R5805	3%	3	4	93	97.00%
3% M Screen	Charcoal/Sable	R5808	3%	4	12	84	97.00%
3% M Screen	White Linen	R5807	3%	15	64	21	97.00%
3% M Screen	White/White	R5801	3%	18	71	11	97.00%
3% Sheerweave 2410	Charcoal	R0603	3%	3	3	94	97.00%
3% Sheerweave 2410	Charcoal/Alpaca	R0609	3%	4	20	76	97.00%
3% Sheerweave 2410	Charcoal/Chestnut	R0604	3%	3	6	91	97.00%
3% Sheerweave 2410	Oyster	R0605	3%	17	64	19	97.00%
3% Sheerweave 2410	Oyster/Beige	R0606	3%	11	55	34	97.00%
3% Sheerweave 2410	Oyster/Pearl Gray	R0607	3%	9	44	47	97.00%
3% Sheerweave 4400	Alabaster	RS2200	3%	10	62	28	97.00%
3% Sheerweave 4400	Chalk	RS2202	3%	12	70	18	97.00%
3% Sheerweave 4400	Greystone	RS2201	3%	6	39	55	97.00%
3% Sheerweave 4400	Pewter	RS2203	3%	3	26	71	97.00%
3% Sheerweave 5000	Bark/Sienna	R0710	3%	6	16	78	97.00%
3% Sheerweave 5000	Chenille/Honey	R0707	3%	26	47	27	97.00%
3% Sheerweave 5000	Linen/Cinnamon	R0702	3%	6	20	74	97.00%
3% Sheerweave 5000	Linen/Cream	R0704	3%	22	46	31	97.00%
3% Sheerweave 5000	Linen/Fig	R0705	3%	6	15	79	97.00%
3% T Screen	Charcoal/Charcoal	RS16005	3%	3	4	93	97.00%
3% T Screen	Charcoal/Grey	RS16006	3%	5	11	84	97.00%
3% T Screen	Sable/Charcoal	RS16003	3%	8	15	77	97.00%
3% T Screen	White/Pearl	RS16004	3%	13	49	38	97.00%
3% T Screen	White/Sable-Straw	RS16002	3%	16	56	28	97.00%
3% T Screen	White/White	RS16001	3%	18	70	12	97.00%
4% S Screen	Ginger	RS15006	4%	9	36	55	96.00%
4% S Screen	Granite	RS15004	4%	9	31	60	96.00%
4% S Screen	Papyrus	RS15003	4%	11	38	51	96.00%
4% S Screen	Porcelain	RS15001	4%	12	59	29	96.00%
4% S Screen	Sesame	RS15007	4%	6	18	76	96.00%

*See **SOLAR OPTICAL INFORMATION** section for detail.

SOLAR OPTICAL CHART

Material Name	Color Name	Color #	Openness Factor*	Transmission*	Reflection*	Absorption*	UV Rating*
4% Silver Screen	Beige	RS6501	4%	6	74	20	96.00%
4% Silver Screen	Black	RS6504	4%	4	75	21	96.00%
4% Silver Screen	Bronze	RS6503	4%	5	77	18	96.00%
4% Silver Screen	Light Grey	RS6500	4%	4	77	19	96.00%
4% Silver Screen	White	RS6502	4%	5	76	19	96.00%
5% E Screen	Charcoal/Charcoal	R5105	5%	7	10	83	95.00%
5% E Screen	Charcoal/Cocoa	R5104	5%	7	6	87	95.00%
5% E Screen	Charcoal/Grey	R5110	5%	7	10	83	95.00%
5% E Screen	Pure White	R5101	5%	20	71	9	95.00%
5% E Screen	White/Linen	R5108	5%	20	62	18	95.00%
5% E Screen	White/Pearl	R5109	5%	12	51	37	95.00%
5% M Screen Deco	Flagstone	R6107	5%	8	21	72	95.00%
5% M Screen Deco	Harvest Wheat	R6104	5%	8	16	76	95.00%
5% M Screen Deco	Hazelnut	R6105	5%	7	14	79	95.00%
5% M Screen Deco	Parchment	R6106	5%	16	63	21	95.00%
5% M Screen Deco	River Rock	R6102	5%	10	33	57	95.00%
5% M Screen Deco	Tumbleweed	R6103	5%	10	29	61	95.00%
5% Sheerweave 2390	Charcoal	RS1105	5%	4	4	92	95.00%
5% Sheerweave 2390	Charcoal/Alpaca	RS1106	5%	7	18	75	95.00%
5% Sheerweave 2390	Charcoal/Chestnut	RS1104	5%	6	6	88	95.00%
5% Sheerweave 2390	Charcoal/Gray	RS1102	5%	5	9	86	95.00%
5% Sheerweave 2390	Oyster	RS1100	5%	21	61	18	95.00%
5% Sheerweave 2390	Oyster/Beige	RS1101	5%	17	54	29	95.00%
5% Sheerweave 2390	Oyster/Pearl Gray	RS1103	5%	14	45	41	95.00%
5% Sheerweave 4000	Alabaster	R0901	5%	15	57	28	95.00%
5% Sheerweave 4000	Chalk	R0902	5%	16	68	16	95.00%
5% Sheerweave 4000	Granite	R0906	5%	11	41	48	95.00%
5% Sheerweave 4000	Greystone	R0904	5%	10	34	56	95.00%
5% Sheerweave 5000	Aura Sable	R1021	5%	4	14	82	95.00%
5% Sheerweave 5000	Bark/Ash	R1009	5%	NA	NA	NA	95.00%
5% Sheerweave 5000	Bark/Pewter	R1010	5%	NA	NA	NA	95.00%
5% Sheerweave 5000	Bark/Tiger Oak	R1001	5%	17	24	59	95.00%
5% Sheerweave 5000	Chenille/Driftwood	R1007	5%	12	26	52	95.00%
5% Sheerweave 5000	Contour Essence	R1017	5%	0	0	0	95.00%
5% Sheerweave 5000	Contour Natural	R1016	5%	0	0	0	95.00%
5% Sheerweave 5000	Contour Smoke	R1018	5%	0	0	0	95.00%
5% Sheerweave 5000	Linen/Pearl	R1014	5%	NA	NA	NA	95.00%
5% Sheerweave 5000	Linen/Taupe	R1015	5%	NA	NA	NA	95.00%
5% Sheerweave 5000	Metro /Platinum	R1019	5%	NA	NA	NA	95.00%
5% Sheerweave 5000	Pavestone	R1020	5%	0	0	0	95.00%
5% Sheerweave 5000	Tweed/Buckeye	R1003	5%	9	28	63	95.00%
5% Sheerweave 5000	Tweed/Oatmeal	R1006	5%	11	34	55	95.00%
5% Sheerweave 5000	Twine/Flagstone	R1012	5%	0	0	0	95.00%
5% Sheerweave 5000	Twine/Metal	R1013	5%	0	0	0	95.00%
5% Sheerweave 5000	Twine/Oatmeal	R1011	5%	0	0	0	95.00%
7% Global Screen	Barley	RS14002	7%	NA	NA	NA	93.00%
7% Global Screen	Canvas	RS14001	7%	NA	NA	NA	93.00%
7% Global Screen	Platinum	RS14003	7%	NA	NA	NA	93.00%
7% Sheerweave 5000	Bamboo/Wheat	R1008	7%	19	29	52	93.00%
7% Sheerweave 5000	Bamboo White/Wheat	R3409	7%	17	55	28	93.00%
7% Sheerweave 5000	Linen/Clay	R3408	7%	NA	NA	NA	93.00%
10% E Screen	Charcoal/Charcoal	R1902	10%	12	3	85	90.00%
10% E Screen	Charcoal/Cocoa	R1907	10%	11	5	84	90.00%
10% E Screen	White Pearl	R1908	10%	20	50	30	90.00%
10% E Screen	White/Linen	R1905	10%	25	58	17	90.00%
10% E Screen	White/White	R1906	10%	25	66	9	90.00%
10% Sheerweave 5000	Bamboo/Birch	R2603	10%	NA	NA	NA	90.00%

*See **SOLAR OPTICAL INFORMATION** section for detail.

SOLAR OPTICAL CHART

Material Name	Color Name	Color #	Openness Factor*	Transmission*	Reflection*	Absorption*	UV Rating*
Alexandria	Charcoal	RD403	Translucent	NA	NA	NA	NA
Alexandria	Duck Egg	RD402	Translucent	NA	NA	NA	NA
Alexandria	Oatmeal	RD401	Translucent	NA	NA	NA	NA
Astaire	Grey	RF42004	Translucent	NA	NA	NA	NA
Astaire	Ivory	RF42002	Translucent	NA	NA	NA	NA
Astaire	White	RF42001	Translucent	NA	NA	NA	NA
Avila R Blackout	Canvas	RB703	Blackout	0	75	25	99.99%
Avila R Blackout	Chalk	RB702	Blackout	0	65	35	99.99%
Avila R Blackout	Charcoal	RB708	Blackout	0	40	60	99.99%
Avila R Blackout	Khaki	RB705	Blackout	0	38	62	99.99%
Avila R Blackout	Linen	RB704	Blackout	0	59	41	99.99%
Avila R Blackout	Marine	RB706	Blackout	0	46	54	99.99%
Avila R Blackout	Onyx	RB709	Blackout	0	4	96	99.99%
Avila R Blackout	Pewter	RB707	Blackout	0	18	82	99.99%
Avila R Blackout	White	RB701	Blackout	0	84	16	99.99%
Baroque	Champagne	RD501	Translucent	NA	NA	NA	NA
Baroque	Cyan	RD502	Translucent	NA	NA	NA	NA
Baroque	Ebony	RD504	Translucent	NA	NA	NA	NA
Baroque	Ruby	RD503	Translucent	NA	NA	NA	NA
Blackout - Solid	Alabaster	R4011	Blackout	NA	NA	NA	99.99%
Blackout - Solid	Bone	R4005	Blackout	NA	NA	NA	99.99%
Blackout - Solid	Buff	R4008	Blackout	NA	NA	NA	99.99%
Blackout - Solid	Oyster	R4006	Blackout	NA	NA	NA	99.99%
Blackout - Solid	White	R4001	Blackout	NA	NA	NA	99.99%
Brilliance	Birch	RD802	Translucent	NA	NA	NA	NA
Brilliance	Dove Gray	RD804	Translucent	NA	NA	NA	NA
Brilliance	Pearl	RD801	Translucent	NA	NA	NA	NA
Brilliance	Putty	RD803	Translucent	NA	NA	NA	NA
Brilliance	Pyrite	RD805	Translucent	NA	NA	NA	NA
Brilliance	Steel	RD806	Translucent	NA	NA	NA	NA
Brilliance Blackout	Birch	RB602	Blackout	NA	NA	NA	99.99%
Brilliance Blackout	Dove Gray	RB604	Blackout	NA	NA	NA	99.99%
Brilliance Blackout	Pearl	RB601	Blackout	NA	NA	NA	99.99%
Brilliance Blackout	Putty	RB603	Blackout	NA	NA	NA	99.99%
Brilliance Blackout	Pyrite	RB605	Blackout	NA	NA	NA	99.99%
Brilliance Blackout	Steel	RB606	Blackout	NA	NA	NA	99.99%
Carrara	Coal	RD606	Translucent	NA	NA	NA	NA
Carrara	Saddle	RD604	Translucent	NA	NA	NA	NA
Carrara	Silver	RD603	Translucent	NA	NA	NA	NA
Carrara	Storm	RD605	Translucent	NA	NA	NA	NA
Carrara	Tusk	RD602	Translucent	NA	NA	NA	NA
Carrara	White	RD601	Translucent	NA	NA	NA	NA
Carrara Blackout	Coal	RB406	Blackout	NA	NA	NA	99.99%
Carrara Blackout	Saddle	RB404	Blackout	NA	NA	NA	99.99%
Carrara Blackout	Silver	RB403	Blackout	NA	NA	NA	99.99%
Carrara Blackout	Storm	RB405	Blackout	NA	NA	NA	99.99%
Carrara Blackout	Tusk	RB402	Blackout	NA	NA	NA	99.99%
Carrara Blackout	White	RB401	Blackout	NA	NA	NA	99.99%
Claudio	Ash	RD706	Translucent	NA	NA	NA	NA
Claudio	Cloud	RD701	Translucent	NA	NA	NA	NA
Claudio	Cream	RD702	Translucent	NA	NA	NA	NA
Claudio	Gray Matters	RD708	Translucent	NA	NA	NA	NA
Claudio	Mink	RD704	Translucent	NA	NA	NA	NA
Claudio	Mist	RD703	Translucent	NA	NA	NA	NA
Claudio	Reef	RD705	Translucent	NA	NA	NA	NA
Claudio	Sailcloth	RD707	Translucent	NA	NA	NA	NA

*See **SOLAR OPTICAL INFORMATION** section for detail.

SOLAR OPTICAL CHART

Material Name	Color Name	Color #	Openness Factor*	Transmission*	Reflection*	Absorption*	UV Rating*
Claudio Blackout	Ash	RB506	Blackout	NA	NA	NA	99.99%
Claudio Blackout	Cloud	RB501	Blackout	NA	NA	NA	99.99%
Claudio Blackout	Cream	RB502	Blackout	NA	NA	NA	99.99%
Claudio Blackout	Mink	RB504	Blackout	NA	NA	NA	99.99%
Claudio Blackout	Mist	RB503	Blackout	NA	NA	NA	99.99%
Claudio Blackout	Reef	RB505	Blackout	NA	NA	NA	99.99%
Cusco	Chateau	RF6400	Blackout	NA	NA	NA	99.99%
Cusco	Coconut Husk	RF6401	Blackout	NA	NA	NA	99.99%
Cusco	Shadow Ridge	RF6402	Blackout	NA	NA	NA	99.99%
Darien	Bark	RD106	Translucent	NA	NA	NA	NA
Darien	Beige	RD101	Translucent	NA	NA	NA	NA
Darien	Charcoal	RD107	Translucent	NA	NA	NA	NA
Darien	Driftwood	RD103	Translucent	NA	NA	NA	NA
Darien	Mocha	RD104	Translucent	NA	NA	NA	NA
Darien	Sand	RD102	Translucent	NA	NA	NA	NA
Darien	Sea Mist	RD105	Translucent	NA	NA	NA	NA
Drizzle	Flax	RD201	Translucent	NA	NA	NA	NA
Drizzle	Graphite	RD205	Translucent	NA	NA	NA	NA
Drizzle	Hessian	RD202	Translucent	NA	NA	NA	NA
Drizzle	Iron	RD204	Translucent	NA	NA	NA	NA
Drizzle	Tweed	RD203	Translucent	NA	NA	NA	NA
Fiona	Grey	RD303	Translucent	NA	NA	NA	NA
Fiona	Sand	RD301	Translucent	NA	NA	NA	NA
Fiona	Smokey Blue	RD302	Translucent	NA	NA	NA	NA
Flocke Blackout	Chartreux	R9205	Blackout	0	71	29	99.99%
Flocke Blackout	Crystal	R9204	Blackout	0	71	29	99.99%
Flocke Blackout	Sea Cliff	R9202	Blackout	0	71	29	99.99%
Flocke Blackout	Spun Silk	R9203	Blackout	0	70	30	99.99%
Hayworth	Linen	RF32001	Translucent	NA	NA	NA	NA
Hayworth	White	RF32000	Translucent	NA	NA	NA	NA
Illusion	Dove	RF34003	Translucent	NA	NA	NA	NA
Illusion	Flannel	RF34004	Translucent	NA	NA	NA	NA
Illusion	Ivory	RF34002	Translucent	NA	NA	NA	NA
Illusion	Snow	RF34001	Translucent	NA	NA	NA	NA
Jasper	Country Linen	RF5303	Translucent	57	12	49	NA
Jasper	Heather	RF5302	Translucent	52	8	52	NA
Jasper	Storm Cloud	RF5300	Translucent	39	3	57	NA
Jasper	Tweed	RF5301	Translucent	44	3	55	NA
Linview	Ash	R5613	Translucent	NA	NA	NA	NA
Linview	Cabana Wood	R5603	Translucent	NA	NA	NA	NA
Linview	Fog	R5611	Translucent	NA	NA	NA	NA
Linview	Macadamia	R5606	Translucent	NA	NA	NA	NA
Linview	Midnight Black	R5615	Translucent	NA	NA	NA	NA
Linview	Morning Light	R5602	Translucent	NA	NA	NA	NA
Linview	Navy	R5610	Translucent	NA	NA	NA	NA
Linview	New York Grey	R5614	Translucent	NA	NA	NA	NA
Linview	Pale Lapis	R5609	Translucent	NA	NA	NA	NA
Linview	Porpoise	R5612	Translucent	NA	NA	NA	NA
Linview	Rural Green	R5607	Translucent	NA	NA	NA	NA
Linview	Skyward	R5608	Translucent	NA	NA	NA	NA
Linview	Slate	R5605	Translucent	NA	NA	NA	NA
Linview	Summer White	R5601	Translucent	NA	NA	NA	NA
Linview	Weathered Walnut	R5604	Translucent	NA	NA	NA	NA

*See **SOLAR OPTICAL INFORMATION** section for detail.

SOLAR OPTICAL CHART

Material Name	Color Name	Color #	Openness Factor*	Transmission*	Reflection*	Absorption*	UV Rating*
Linview Blackout	Alabaster	RB302	Blackout	NA	NA	NA	99.99%
Linview Blackout	Café Crème	RB303	Blackout	NA	NA	NA	99.99%
Linview Blackout	Collonade Gray	RB306	Blackout	NA	NA	NA	99.99%
Linview Blackout	Gauntlet Gray	RB309	Blackout	NA	NA	NA	99.99%
Linview Blackout	Pale Gray	RB307	Blackout	NA	NA	NA	99.99%
Linview Blackout	Pure White	RB301	Blackout	NA	NA	NA	99.99%
Linview Blackout	Stone	RB304	Blackout	NA	NA	NA	99.99%
Linview Blackout	Tranquility	RB305	Blackout	NA	NA	NA	99.99%
Linview Blackout	Whale	RB308	Blackout	NA	NA	NA	99.99%
Montero	Dark Walnut	RF4200	Translucent	NA	NA	NA	NA
Montero	Java Coast	RF4201	Translucent	NA	NA	NA	NA
Montero	Wicker Basket	RF4202	Translucent	NA	NA	NA	NA
Moravia	Coastal	RF8602	Translucent	NA	NA	NA	NA
Moravia	Countryside	RF8600	Translucent	NA	NA	NA	NA
Moravia	Seabreeze	RF8601	Translucent	NA	NA	NA	NA
Santa Cruz	Bunglehouse Blue	RF3101	Translucent	NA	NA	NA	NA
Santa Cruz	Manchester	RF3100	Translucent	NA	NA	NA	NA
Santa Cruz	Night Sky	RF3106	Translucent	NA	NA	NA	NA
Santa Cruz	Rainforest	RF3107	Translucent	NA	NA	NA	NA
Santa Cruz Blackout	Bunglehouse Blue	RB102	Blackout	NA	NA	NA	99.99%
Santa Cruz Blackout	Manchester	RB101	Blackout	NA	NA	NA	99.99%
Santa Cruz Blackout	Night Sky	RB104	Blackout	NA	NA	NA	99.99%
Santa Cruz Blackout	Rainforest	RB103	Blackout	NA	NA	NA	99.99%
Scala Blackout	Gray	R10005	Blackout	NA	NA	NA	99.99%
Scala Blackout	Off White	R10002	Blackout	NA	NA	NA	99.99%
Scala Blackout	Silver	R10004	Blackout	NA	NA	NA	99.99%
Scala Blackout	White	R10001	Blackout	NA	NA	NA	99.99%
Sorrento	Bisque	RF35002	Translucent	NA	NA	NA	NA
Sorrento	Linen	RF35001	Translucent	NA	NA	NA	NA
Sorrento	Stucco	RF35003	Translucent	NA	NA	NA	NA
Sunscreen 7000	Birch	R1101	Blackout	0	64	36	99.99%
Sunscreen 7000	Graphite	R1107	Blackout	0	64	36	99.99%
Sunscreen 7000	Mushroom	R1102	Blackout	0	64	36	99.99%
Sunscreen 7000	Onyx	R1103	Blackout	0	64	36	99.99%
Sunscreen 7000	Sand	R1104	Blackout	0	64	36	99.99%
Sunscreen 7000	White	R1106	Blackout	0	64	36	99.99%
Uptown	Sterling	R7902	Translucent	NA	NA	NA	NA
Uptown	Sterling Room Darkening	R7901	Blackout	75	0	25	99.99%
World Textures 1	Cyprus Coast	R4802	Translucent	55	40	5	NA
World Textures 1	Medina Mirage	R4803	Translucent	55	30	15	NA
World Textures 1	Medina Vision	R4806	Translucent	55	30	15	NA
World Textures 1 Blackout	Cypress Formal	R5001	Blackout	75	0	25	99.99%
World Textures 2	Oslo Blend	R4902	Translucent	55	20	25	NA
World Textures 2 Blackout	Oslo Terrain	R5004	Blackout	NA	NA	NA	99.99%

*See **SOLAR OPTICAL INFORMATION** section for detail.

PRODUCT COMPONENTS – SKYLINE CLUTCHES AND BRACKETS

CLUTCH LIFT CONTINUOUS CONTROL WITH CASSETTE VALANCE OPTION

Large Cassette Valance (Part #SB20-0304-*)
Medium Cassette Valance (Part #CRV100*)
Small Cassette Valance (Part #CRV-*)

SL10 (Part #SL10H01*)
SL15 (Part #SL15H01*)
SL20 (Part #SL20H53*)
SL30 (Part #SL30H53*)
(Specify White or Black)

Large Cassette Color Key

CASSETTE
020490-Anodized
050490-Black
080490-Bronze
075490-White
414490-Vanilla

END CAP
050120-Black
089120-Bronze
075120-White
414120-Vanilla
331120-Gray

Skyline Pin End Plug
1 1/8" (Part #SLPEV01*)
1 1/2" (Part #SLPEV53*)
or (Part# SLPEHD53*)
(Specify White or Black)

Small & Medium Cassette Color Key

* = W – White
* = V – Vanilla
* = BZ – Bronze
* = BK – Black

Hardware Color Key

* = W – White
* = BK – Black

Plastic Chain (Part #RC458*)
* = 661 - White
* = 048 - Black
* = 674 - Vanilla
* = 064 - Bronze

Metal Chain:
(Part #10001) White
(Part #10002) Black
(Part #444904) Nickel
(Part #02059ANTBRASS) Antique Brass
(Part #00296MEDBRASS) Oil Rubbed
(Part #00297STAINSTEL) Stainless Steel

For Plastic Chain:
Clear Bead Stop (not shown)
(Part# RC130000)

Chain Connector (Part #RC469000)

For Metal Chain:
Metal Stop Ball (not shown)
(Part# 00624WHITE)
(Part#00624BLACK)
(Part#00625AB) Antique Brown
(Part#00625MB) Brass
(Part#444906) Nickel

Large End Cap
(Part #SB20-0303-*)

Medium End Cap
(Part #CREC100*)

Small End Cap
(Part #CREC–*)

Bottom Bar End Cap
(Part #RC443250 – Clear)

Tensioner Bracket Mounting Kit
(Part #KIT_1110)

Optional Deluxe Hem Bar Endcaps
(Part #HBEC*) (not shown)

Hardware Color Key

* = W – White
* = V – Vanilla
* = A – Silver
* = BZ – Bronze
* = BK – Black

Cord Tensioner
Cover: (Part #RB91-1334-Color)
Base: (Part #RB91-1337-Color)

Tensioner Color Key

075000 = White
414000 = Vanilla
473000 = Brown
050000 = Black

Bottom Bar
White (RC444967)
Black (RC444968)

Internal Cassette Brackets

Medium/Large Cassette
(Part #CRUSLB660)

Small Cassette
(Part #CRUSLB)

Intermediate Brackets
(for pin-end to pin-end shades)

2" Intermediate Bracket
(Part #SLB68OIB)

Bracket & Cover Color Key

* = W – White
* = BK – Black

Universal Brackets (without Cassette)

1-1/2" Projection
(Part #SLB660*)

2" Projection
(Part #SLB680R*)

2-7/8" Projection
(Part #SLB690R*)

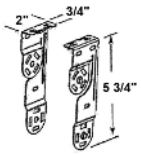

Dual Mounting Bracket
(Part #SLB660DBV*)

3" Fascia

Chain Diverter
(SL20 Clutches only)
(Part# SLCDW) White
(Part# SLCDW) Black
(SL10 and SL15 Clutches only)
(Part# SL15DCVRW)
(Part# SL15DCVRBK)

3" brackets
(Part #SLFBKT3*)

3" fascia end cap
(Part #SLSEC*)

4" Fascia

4" Fascia End Cap
(Part #RC430*)
* = 785 - White
* = 864 - Bronze
* = 988 - Gray
* = 048 - Black
* = 350 - Vanilla

4" face plate
(Part #RB581FP*)

4" brackets
(Part #SLFBKT4*)

Hardware Color Key

* = W – White
* = V – Vanilla
* = G – Silver
* = BZ – Bronze
* = BK – Black

Fascia Diverter Chain & Cover in White or Black

Fascia Bracket Clip
(Part #SLFBKTCLP4)

Bracket Covers

1-1/2" Bracket Cover
(Part# SLBCB* Individual)
(KIT-RS-015)

2" Bracket Cover
(Part #SLBC680*)

2-7/8" Bracket Cover
(Part #SLBC690*)

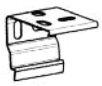

Standard Bracket for
Small Cassette Valance
(KIT-RS-010R 2 PACK)
(KIT-RS-011R 3 PACK)
(Part #VRBKT15 Individual)

Standard Bracket for
Medium Cassette Valance
(KIT-RS-008R 2 PACK)
(KIT-RS-009R 3 PACK)
(Part #HDBKT2 Individual)

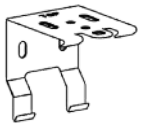

Standard Bracket for
Large Cassette Valance
(KIT-RS-006R 2 PACK)
(KIT-RS-007R 3 PACK)
(Part #V2BKT Individual)

PRODUCT COMPONENTS – R SERIES CLUTCHES AND BRACKETS

CLUTCH LIFT CONTINUOUS CONTROL WITH CASSETTE VALANCE OPTION

Large Clutch/End Plug Bracket
(Part #CRUBKT53L)

Small Clutch/End Plug Bracket
(Part #CRUBKT)

Lug

Large Intermediate Bracket
(Part #CRIMBKT53L)

Small Intermediate Bracket
(Part #CRIMBKT)

Large Cassette Valance (Part #SB20-0304-*)
Medium Cassette Valance (Part #CRV100*)
Small Cassette Valance (Part #CRV-*)

1-1/8" Clutch (Part #R8C01-WHITE)
(Part #R8C01BK-BLACK)

1-1/2" Clutch (Part #R16C53-WHITE)
(Part #R16C53BK-BLACK)

Large Cassette Color Key
CASSETTE 020490-Anodized 050490-Black 080490-Bronze 075490-White 414490-Vanilla
END CAP 050120-Black 089120-Bronze 075120-White 414120-Vanilla 331120-Gray

Small & Medium Cassette Color Key
* = W – White
* = V – Vanilla
* = BZ – Bronze
* = BK – Black

End plugs with Cassette

1-1/8" End Plug
(Part #CREP01-White)
(Part #CREP01BK-Black)

1-1/2" End Plug
(Part #CREP53V-Vanilla)
(Part #CREP53BK-Black)

End plugs – No Cassette

1-1/8" End Plug (Part #REP01-White)
1-1/8" End plug (Part #REP01BK-Black)

1-1/2" End Plug (Part #REP53-White)
1-1/2" End Plug (Part #REP53BK-Black)

Plastic Chain (Part #RC458*)
* = 661 - White
* = 048 - Black
* = 674 - Vanilla
* = 064 - Bronze

Metal Chain:
(Part #10001) White
(Part #10002) Black
(Part #444904) Nickel
(Part #02059ANTBRASS) Antique Brass
(Part #00296MEDBRASS) Oil Rubbed
(Part #00297STAINSTEL) Stainless Steel

For Plastic Chain:
Clear Bead Stop (not shown)
(Part# RC130000)

Chain Connector (Part #RC469000)

For Metal Chain:
Metal Stop Ball (not shown)
(Part# 00624WHITE)
(Part#00624BLACK)
(Part#00625AB) Antique Brown
(Part#00625MB) Brass

Large End Cap
(Part #SB20-0303-*)

Medium End Cap
(Part #CREC100*)

Small End Cap
(Part #CREC–*)

Bottom Bar End Cap
(Part #RC443250-Clear)

Tensioner Bracket Mounting Kit
(Part #KIT_1110)

Cord Tensioner
Cover: (Part #RB91-1334-Color)
Base: (Part #RB91-1337-Color)

Optional Deluxe Hem Bar Endcaps
(Part #HBEC*) (not shown)

Hardware Color Key
* = W – White
* = V – Vanilla
* = A – Silver
* = BZ – Bronze
* = BK – Black

Tensioner Color Key
075000 = White
414000 = Vanilla
473000 = Brown
050000 = Black

Bottom Bar
White (RC444967)
Black (RC444968)

Standard Bracket for
1-1/8" Dia. Clutch Roller Loop
(Part #444908)
(KIT-RS-004)

Standard Bracket for
Small Cassette Valance
(KIT-RS-010R 2 PACK)
(KIT-RS-011R 3 PACK)
(Part #VRBKT15 Individual)

Standard Bracket for
1-1/2" Dia. Clutch Roller
(Part #444910)
(KIT-RS-005R)

Standard Bracket for
Medium Cassette
(KIT-RS-008R 2 PACK)
(KIT-RS-009R 3 PACK)
(Part #HDBKT2 Individual)

Standard Bracket for
Large Cassette Valance
(KIT-RS-006R 2 PACK)
(KIT-RS-007R 3 PACK)
(Part #V2BKT Individual)

Extended Projection Bracket
for Clutch Roller
(1-1/8" Part #444909)
(1-1/2" Part #444911)

Note: Intermediate brackets allow for two shades under one continuous cassette valance up to 120"
– **available with the Clutch system.**
Small Intermediate Bracket (Part #CRIMBKT)
Large Intermediate Bracket (Part #CRIMBKT53L)

Note: Spacer block and extension brackets are not available.

3" Fascia Bracket - Flat

OB Cover

3" Fascia Brackets	3" R Series Fascia Plates
RC461993-Vanilla (R8)	RC429785-White
RC461992-White (R8)	RC429864-Bronze
RB362RTNBZ-Bronze (R8)	RC449988 - Gray
RC461048-Black (R8)	RC429048 - Black
RC461988-Gray (R8)	RC429350- Vanilla

4" Fascia Bracket - Flat

OB Cover

4" Fascia Brackets	4" Fascia Plate
445048-Bronze (R16)	RC430785-White
RC445075-Gray (R16)	RC430048-Black
4450000002-White (R16)	RC430864-Bronze
RC479048-Black (R16)	RC430988-Gray
445046-Vanilla (R16)	RC430350-Vanilla

Exterior Shade with Cable Guide

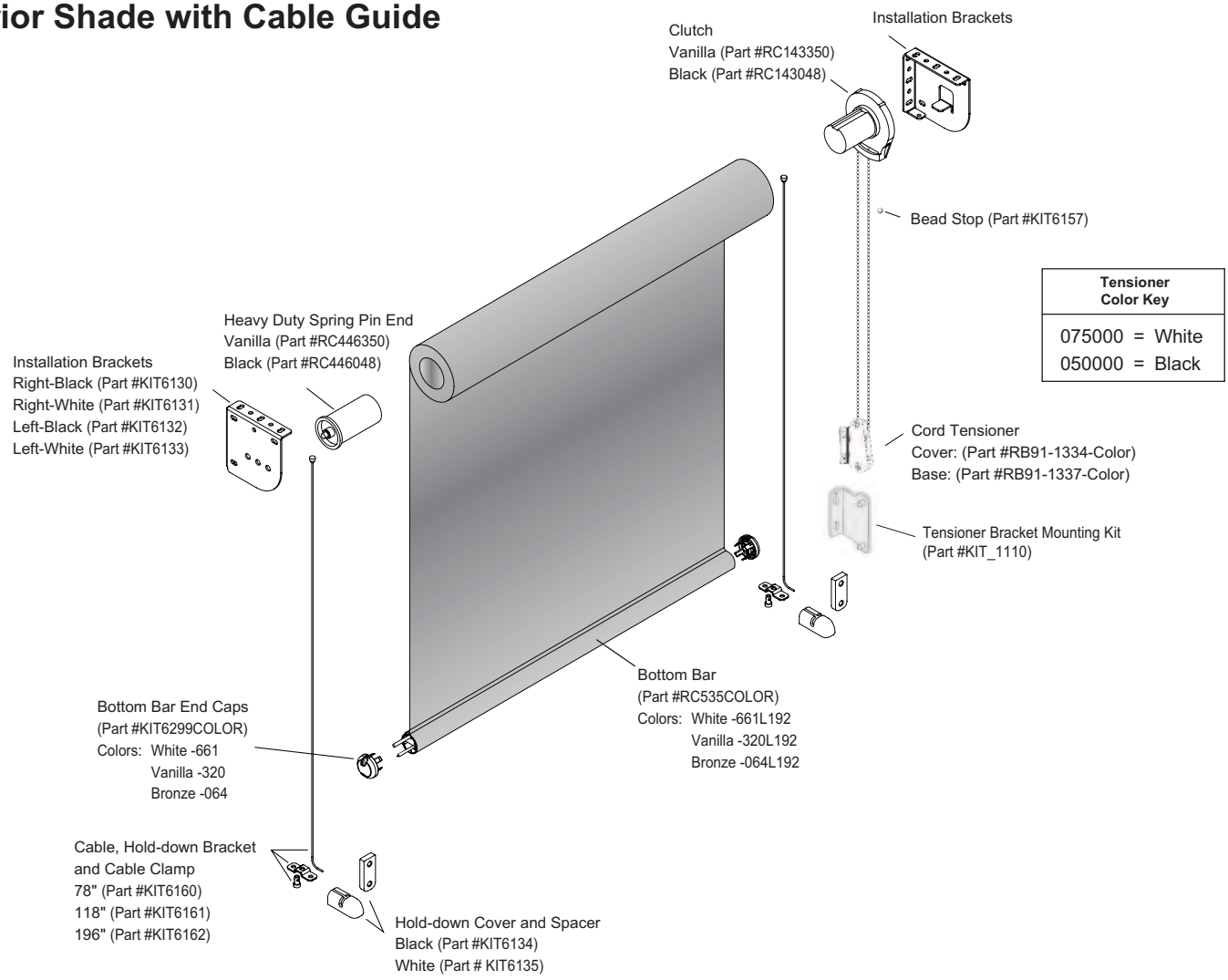

Exterior Shade with Cable Guide & Optional Cassette

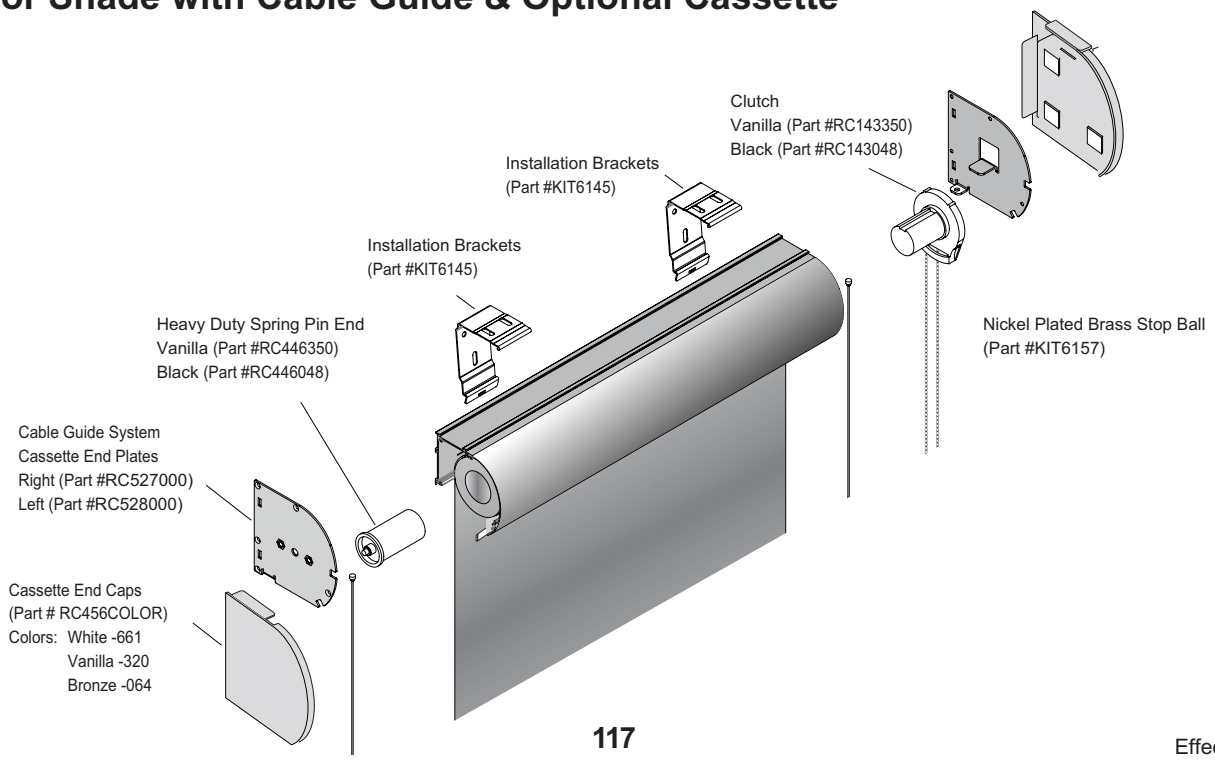

PRODUCT COMPONENTS – EXTERIOR SHADE WITH CASSETTE & GROMMET

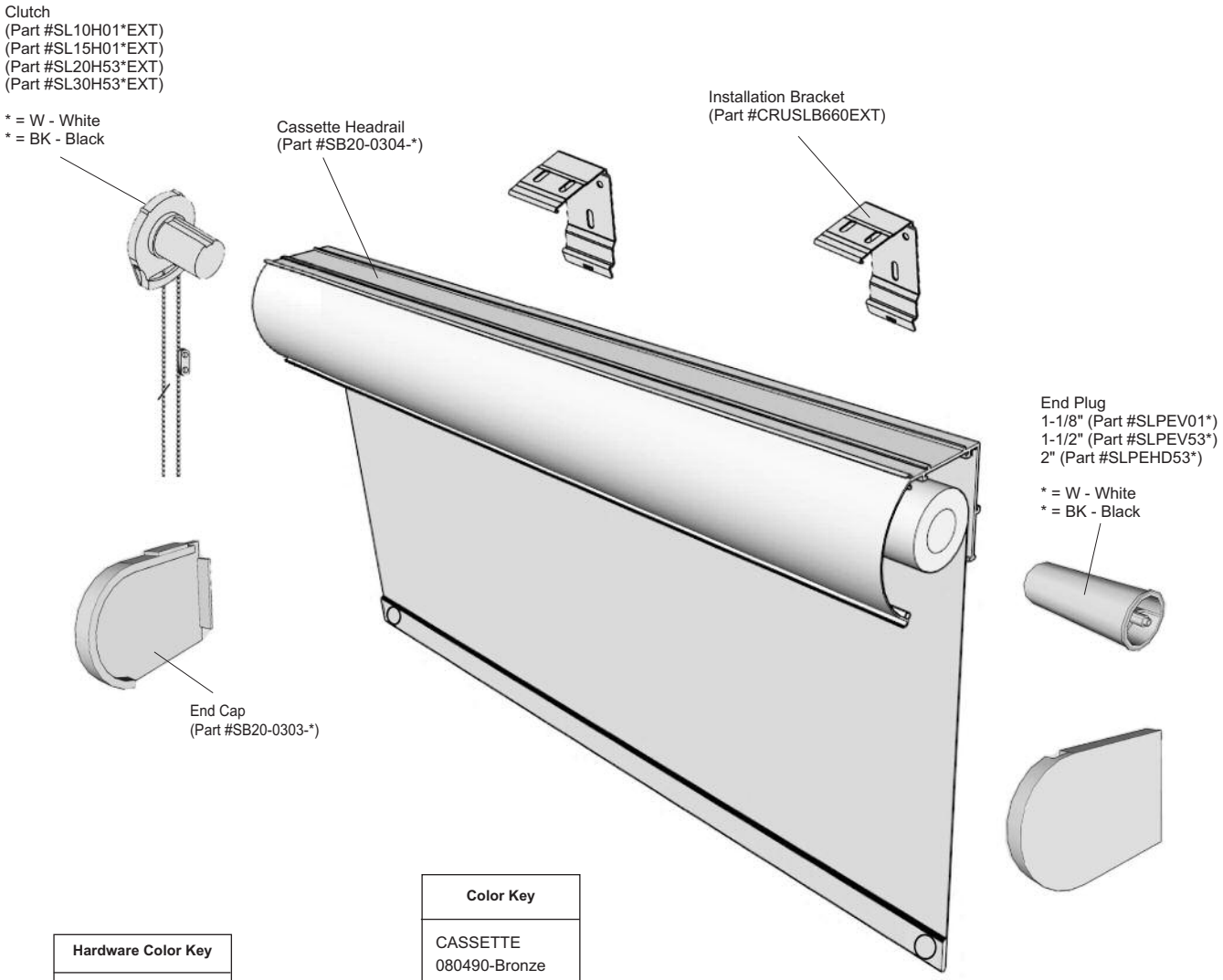

Hardware Color Key
* = W – White
* = BK – Black
* = BZ – Bronze
* = VA – Vanilla
* = SL – Silver

Color Key
CASSETTE 080490-Bronze 075490-White 414490-Vanilla
END CAP 089120-Bronze 075120-White 414120-Vanilla

PRODUCT COMPONENTS – CORDLESS ROLLER SHADE WITH MOUNTING BAR

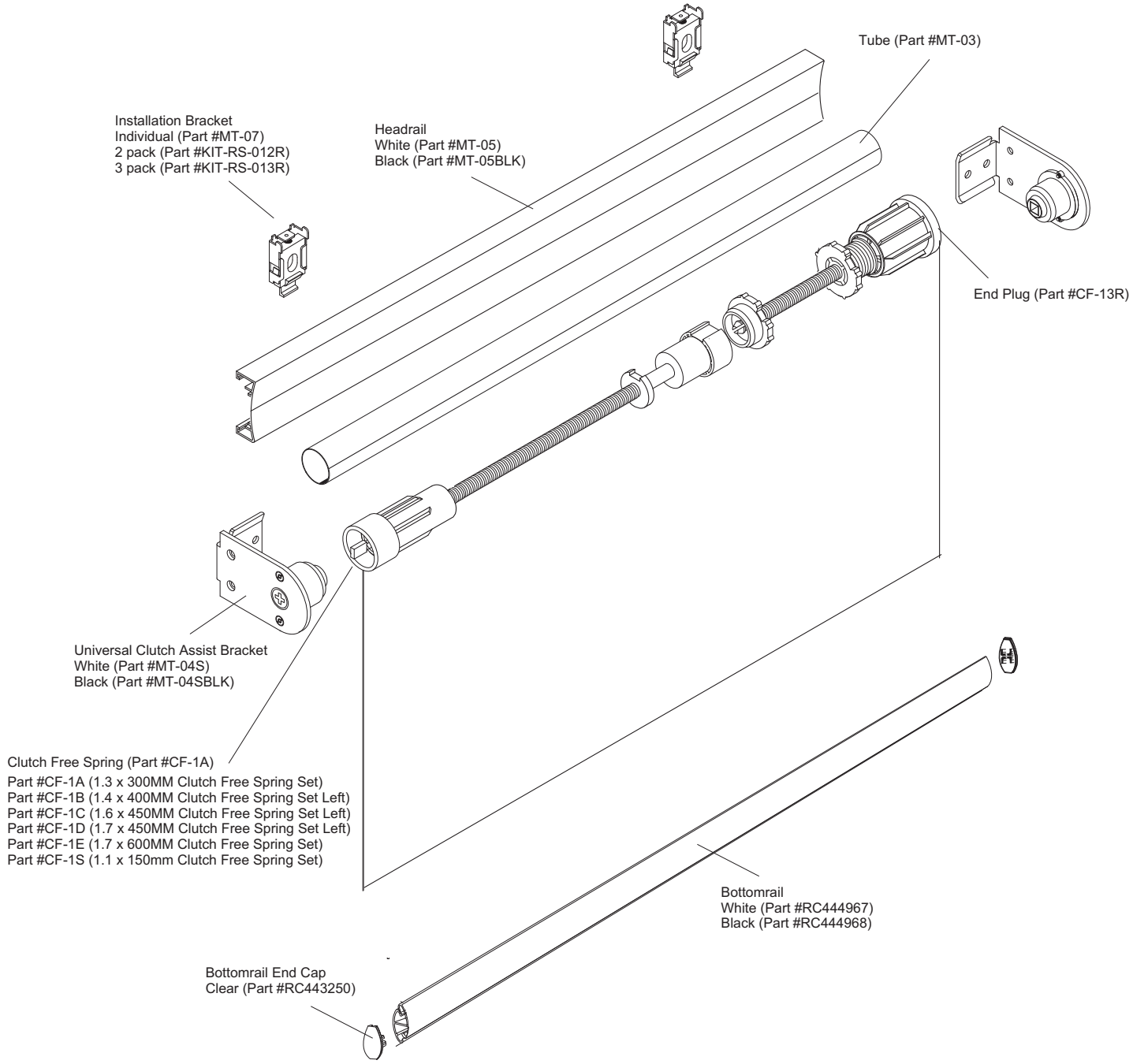

PRODUCT COMPONENTS – CORDLESS ROLLER SHADE WITH CASSETTE

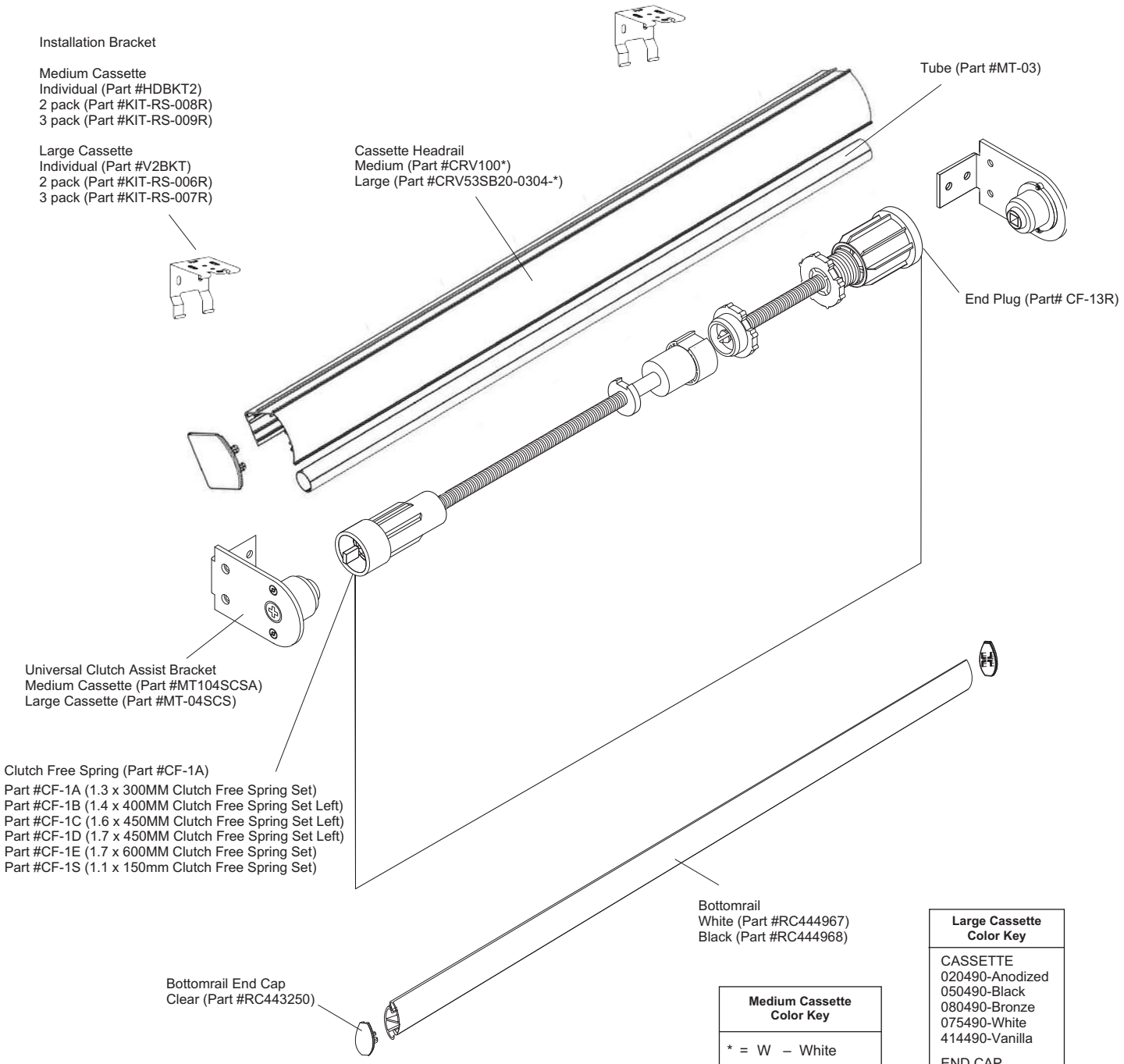

Medium Cassette Color Key
* = W – White
* = BK – Black
* = BZ – Bronze
* = V – Vanilla
* = A – Anodized

Large Cassette Color Key
CASSETTE 020490-Anodized 050490-Black 080490-Bronze 075490-White 414490-Vanilla
END CAP 050120-Black 089120-Bronze 075120-White 414120-Vanilla 331120-Gray

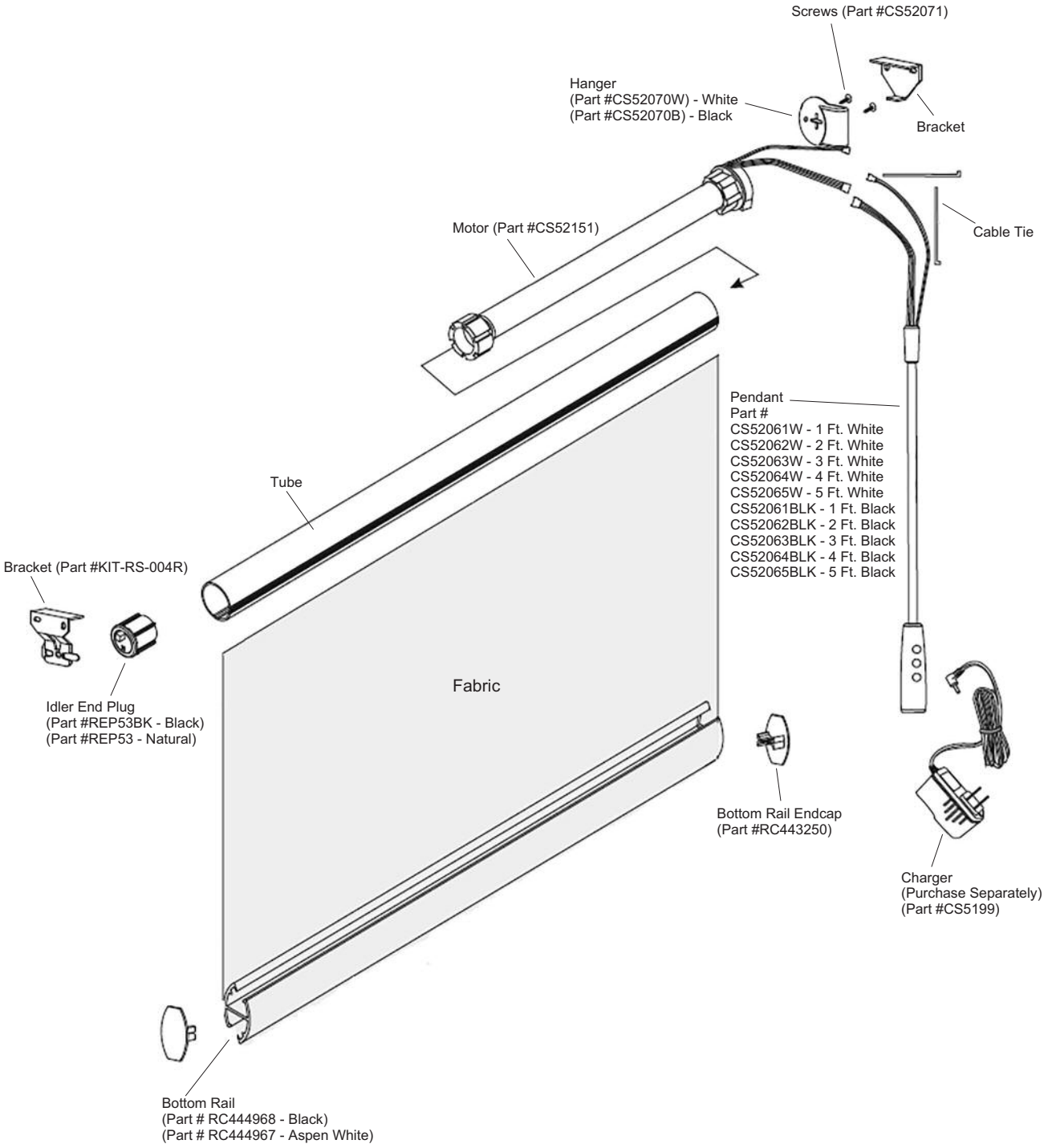
Screws (Part #CS52071)
Hanger
(Part #CS52070W) - White
(Part #CS52070B) - Black
Bracket
Cable Tie
Motor (Part #CS52151)
Pendant
Part #
CS52061W - 1 Ft. White
CS52062W - 2 Ft. White
CS52063W - 3 Ft. White
CS52064W - 4 Ft. White
CS52065W - 5 Ft. White
CS52061BLK - 1 Ft. Black
CS52062BLK - 2 Ft. Black
CS52063BLK - 3 Ft. Black
CS52064BLK - 4 Ft. Black
CS52065BLK - 5 Ft. Black
Tube
Bracket (Part #KIT-RS-004R)
Fabric
Idler End Plug
(Part #REP53BK - Black)
(Part #REP53 - Natural)
Bottom Rail Endcap
(Part #RC443250)
Charger
(Purchase Separately)
(Part #CS5199)
Bottom Rail
(Part # RC444968 - Black)
(Part # RC444967 - Aspen White)

PRODUCT COMPONENTS – SIMPLICITY RECHARGEABLE

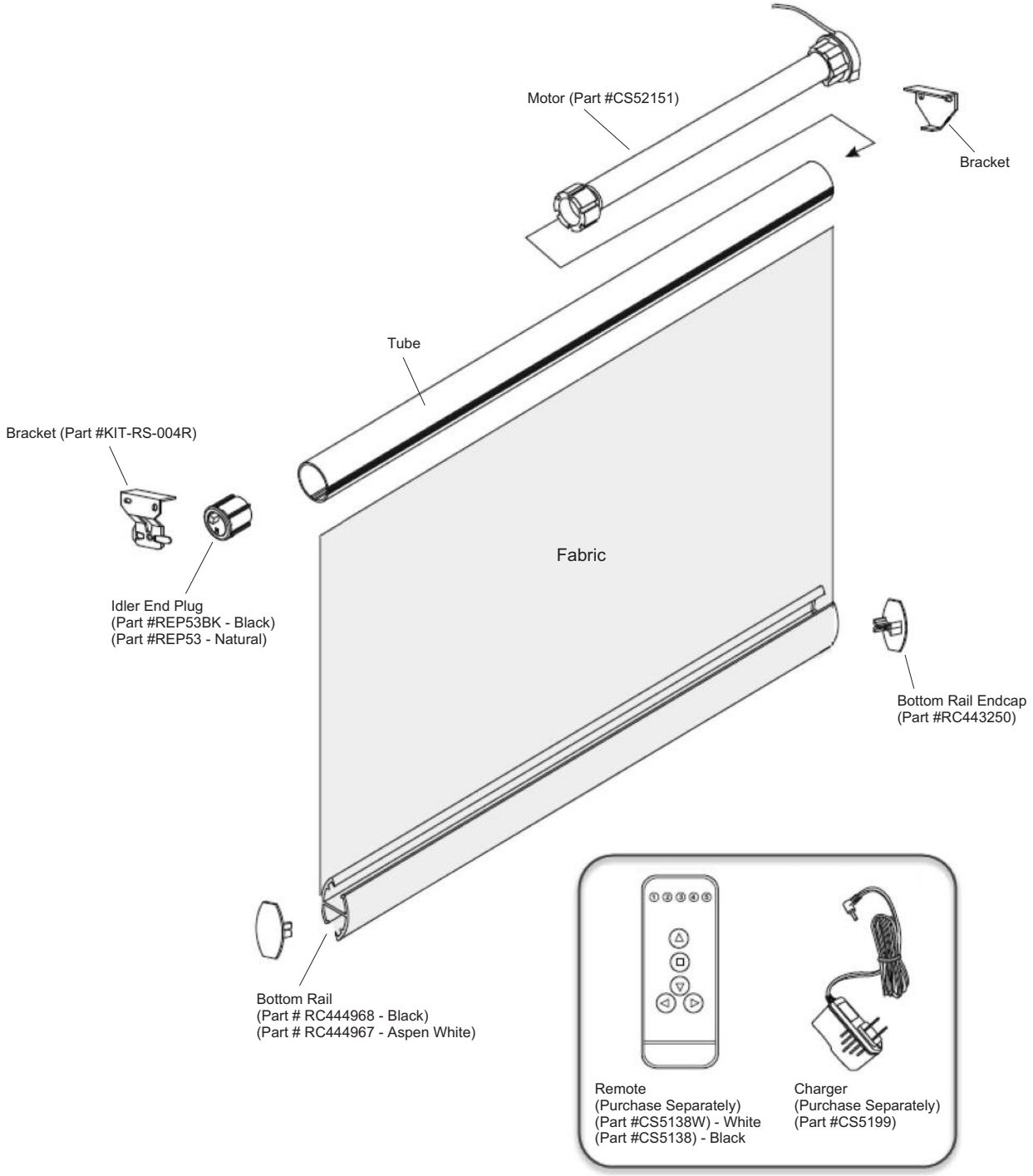

ROLLER SHADE CHARACTERISTICS

All Roller Shades are sent with complete installation instructions. These instructions include information on installing shades properly, child safety device attachments, and shade adjustments. To ensure that all shades operate properly we highly recommend you read these instructions thoroughly and understand them before installing any Roller Shade.

Although we maintain the strictest quality standards and inspect every shade before it leaves our factory, the following characteristics are considered normal and are not manufacturing defects:

- Loose fibers may appear on material edges from time to time. This is normal and does not affect the overall integrity of the shade. Simply trim off the loose fibers with a pair of sharp scissors.
- Material edges may curl inward (hourglass). This is especially noticeable on long narrow shades.
- Screen material is designed to have a clear view-through when viewing directly or on a slight angle. Waviness and distortion is characteristic when viewing from an angle of approximately 30% or more, depending on the pattern.
- Inside mount shades will have light leaks at the top and around outer edges of shades. This is especially noticeable on blackout and room darkening materials.
- Material tube deflection may occur, and a slight V shape may appear in the top and center portion of the shade, especially on shades over 120" wide. This is considered normal, providing that the material does not wrinkle when rolled up onto the tube.
- Please be aware that installing screen shades on windows that feature screens may cause a moire effect.