TransLift TL 2550K Parts Manual

Tink, Inc. • 2361 Durham Dayton Hwy • Durham, CA 95938
Toll Free 888-367-8465 • Fax 530-895-0751 • www.tinkinc.com

Table of Contents

Full Assembly View 2
Tank View 3
Track View 4
Front Idler and Sprocket Views 5
Engine View (Kohler CH940) 6
Covers View 7
Tow and Wheel View 8
Brake View 9

Full Assembly View

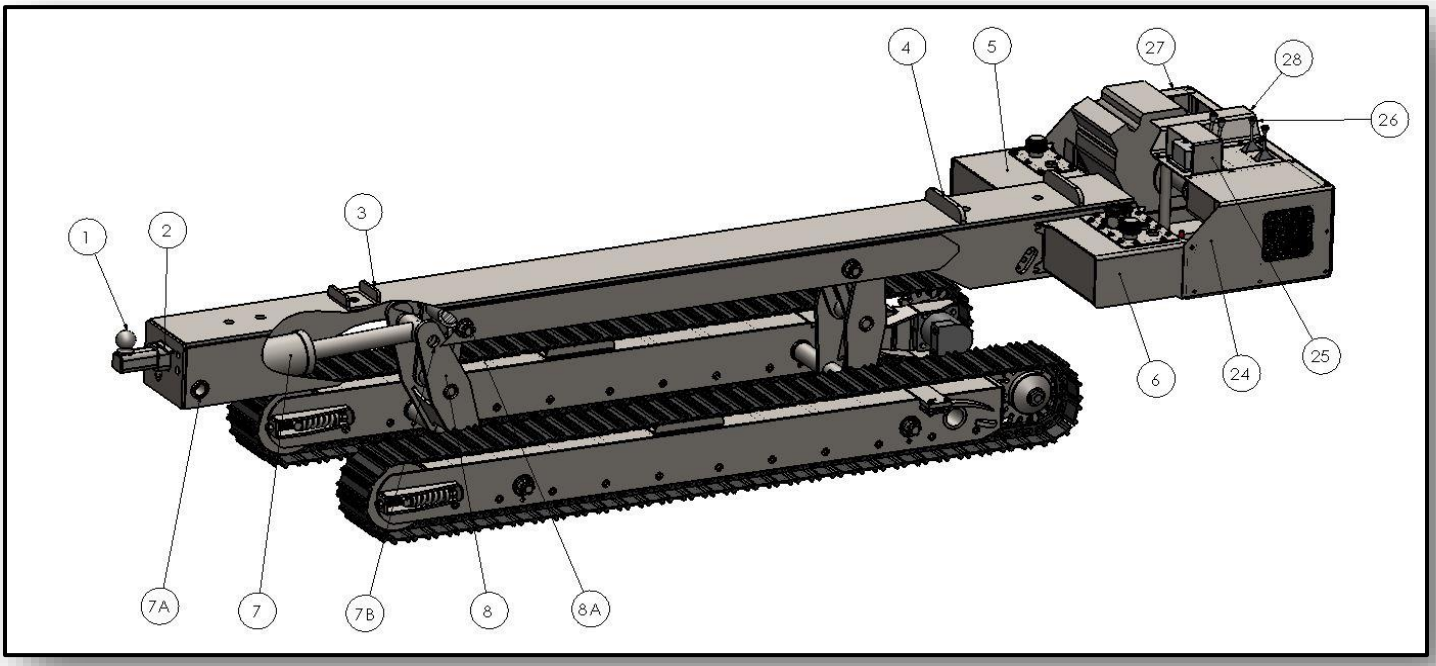

Ref	Part #	Description	Qty.
1	**600110**	**Ball Hitch Assembly**	1
*	*600850*	*Frame Extension*	
2	**600480**	**Hitch Pin, with Chain and Clip**	1
3	**600130**	**Beam Saddle**	1
4	**600140**	**Frame Stop**	1
5	**816200**	**Fuel Tank Top (Bolt-On)**	1
6	**816210**	**Hydraulic Tank Top (Bolt-On)**	1
7	**2005682**	**Cylinder, 6 x 13⅛"**	2
7A	*805490*	*Pin, Cyl Base End*	*2*
7B	*805560*	*Pin, Cyl Rod End*	*2*
*	*2000890*	*Set Screw, ⅜" x 1½" Square Head*	
*	*2001672*	*Nut, ⅜" Serrated Flange*	
8	**601050**	**Linkage Assembly**	2
8A	*805830*	*Pin, Threaded Ends*	*2*
*	*2005630*	*Castle Nut*	*4*
*	*2005631*	*Thick Washer*	*4*
*	*2002375*	*Cotter Pin, ¼" x 2½"*	*4*

** Not Pictured*

******24 -28 are detailed on Covers page******

Ref	Part #	Description	Qty.
24	**600440**	**Panel, Left Side**	1
25	**601010**	**Cover, Cylinder Valve Kohler**	1
26	**600410**	**Muffler Cover**	1
27	**600430**	**Panel, Right Side**	1
28	**600420**	**Panel, Rear Cover**	1

Tank View

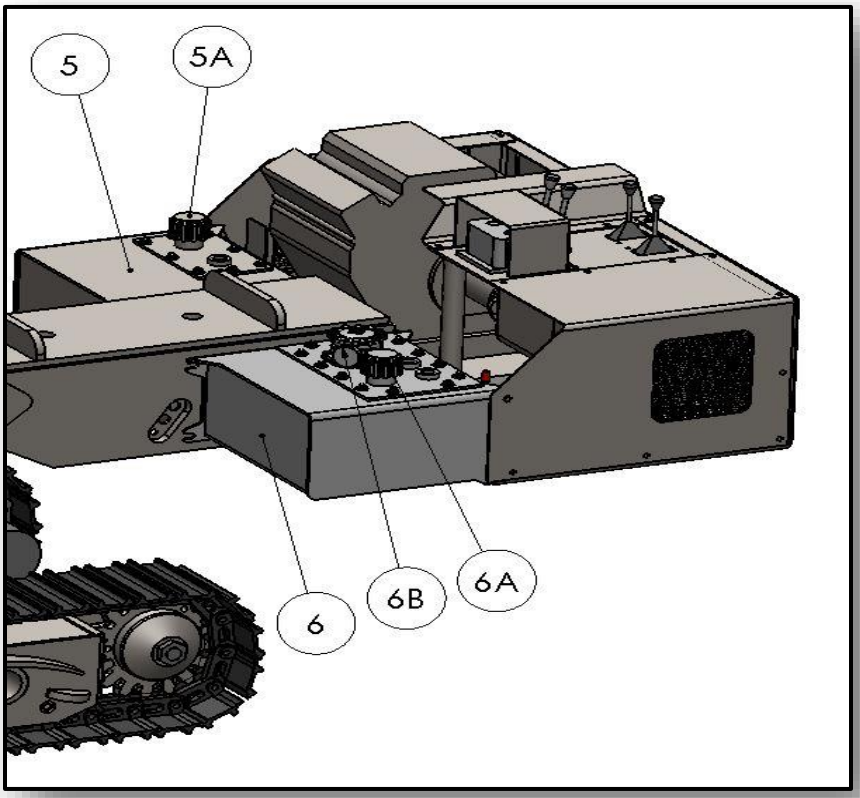

Ref	Part #	Description	Qty.
5	**816200**	**Fuel Tank Top (Bolt-On)**	1
*	*2006056*	*Gasket, Fuel Tank Top*	*1*
5A	*2003993*	*Fuel Fill Cap Assembly*	*1*
*	*2005629*	*Elbow, 90 degree, Brass (4MP-4FP90)*	*1*
*	*2004058*	*Barb Fitting, Brass (4MP-5/16)*	*1*
*	*600790*	*Pick-up Tube, Fuel*	*1*
*	*2003907*	*Filter, Fuel*	*1*
6	**816210**	**Hydraulic Tank Top (Bolt-On)**	1
*	*2006055*	*Gasket, Hydraulic Tank Top*	*1*
6A	*2003994*	*Hydraulic Fill Cap Assembly*	*1*
6B	*2006059*	*Housing, Hydraulic Filter (Bolt-On)*	*1*
*	*2006128*	*Filter Element, Hydraulic*	*1*
*	*2001870*	*Magnetic Plug, ¾" NPT*	*1*
*	*2005932*	*Fitting Kit, Complete*	
*	*2005933*	*Hose Kit, Complete*	

** Not Pictured*

Track View

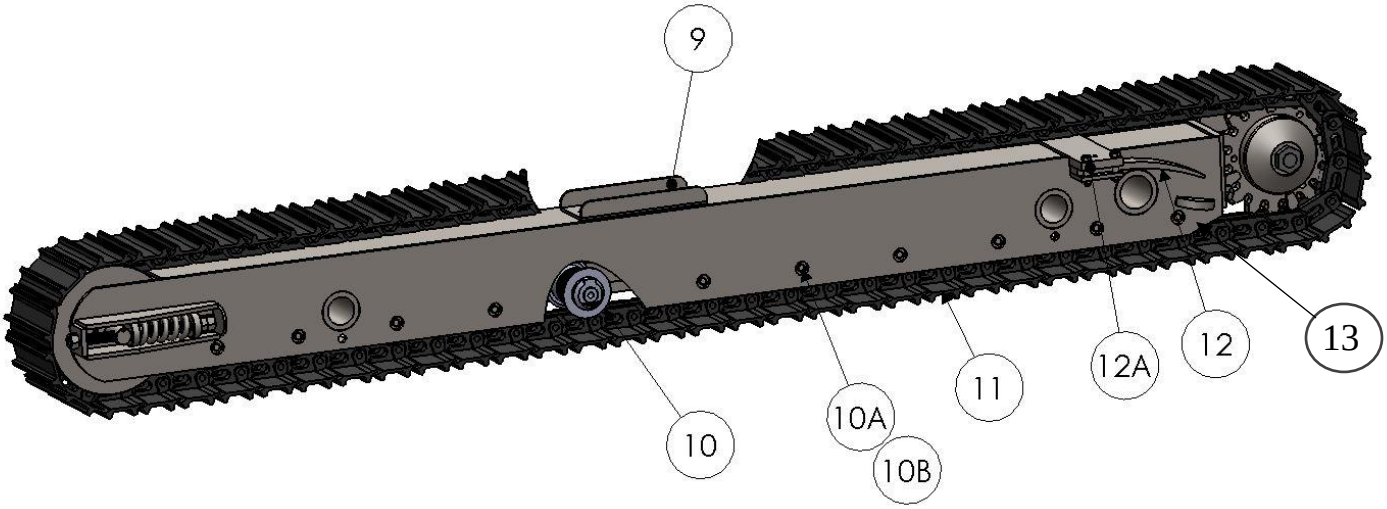

Ref	Part #	Description	Qty
9	**816460**	**Track Guide, Formed Steel**	2
*	*816450*	*Track Wear Pad, UHMW*	*2*
*	*2000863*	*Bolt, ⅜" x 1¾" CS Socket Head*	*6*
10	**2006061**	**Roller, Mid Track**	22
10A	*2006057*	*Bolt, M14 x 2.0 x 30mm*	*44*
10B	*2006058*	*Washer, 14mm Lock*	*44*
11	**2005715**	**Track Assembly, 9" Steel**	2
*	*2005716*	*Repair Section, Single Track Link*	
*	*2006074*	*Connecting Pin, Track*	
12	**600210**	**Leaf Spring**	2
12A	*816280*	*Retainer, Leaf Spring*	*2*
13	*601490*	*Roller, Rear (w/Added Flange)*	*2*

** Not Pictured*

Front Idler and Sprocket Views

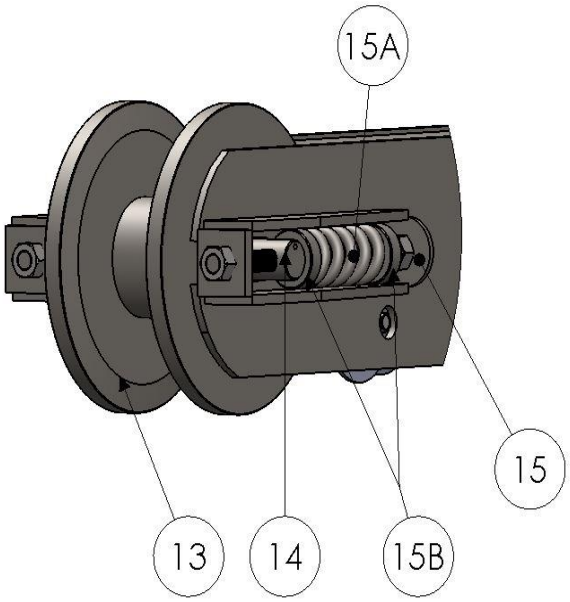

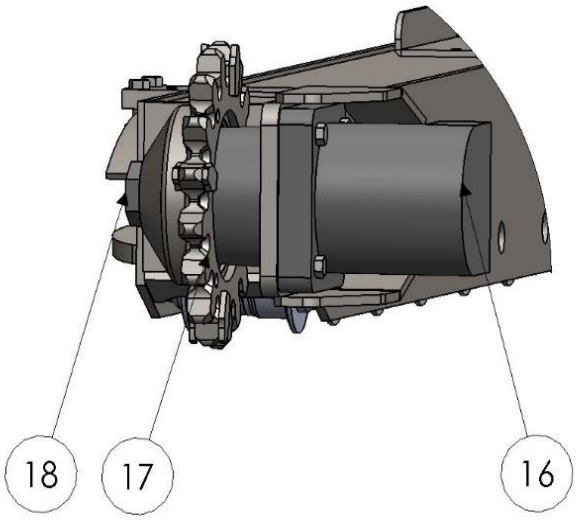

Ref	Part #	Description	Qty
13	**601070**	**Roller, Front Idler**	2
*	*2002179*	*Bushing, Bronze*	*4*
*	*2004010*	*Grease Seal*	*4*
*	*2002003*	*Thrust Washer*	*4*
14	**816240**	**Pin, Front Idler**	2
*	*2004049*	*Grease Zerk*	*2*
15	**2005927**	**Bolt, Track Tension Adjuster**	4
*	*2001697*	*Washer, ⅝" Flat, Grade 8*	*8*
*	*2001562*	*Nut, ⅝" NC*	*8*
15A	*2004805*	*Spring, Track Tension*	*4*
15B	*810780*	*Cup, Tension Spring Retainer*	*8*
16	**2005931**	**Motor, Hydraulic Track Drive**	2
*	*2004025*	*Seal Kit, Track Drive Motor*	
*	*2006129*	*Shaft Assembly, Track Drive Motor*	
17	**601480**	**Sprocket, Track Drive**	2
*	*816850*	*Hardened Key*	*2*
18	**2005978**	**Nut, Sprocket Retainer**	2
*	*2005631*	*Thick Washer*	*2*
*	*2006207*	*Cotter Pin, 5/32" x 3"*	*2*

** Not Pictured*

Engine View (Kohler CH940)

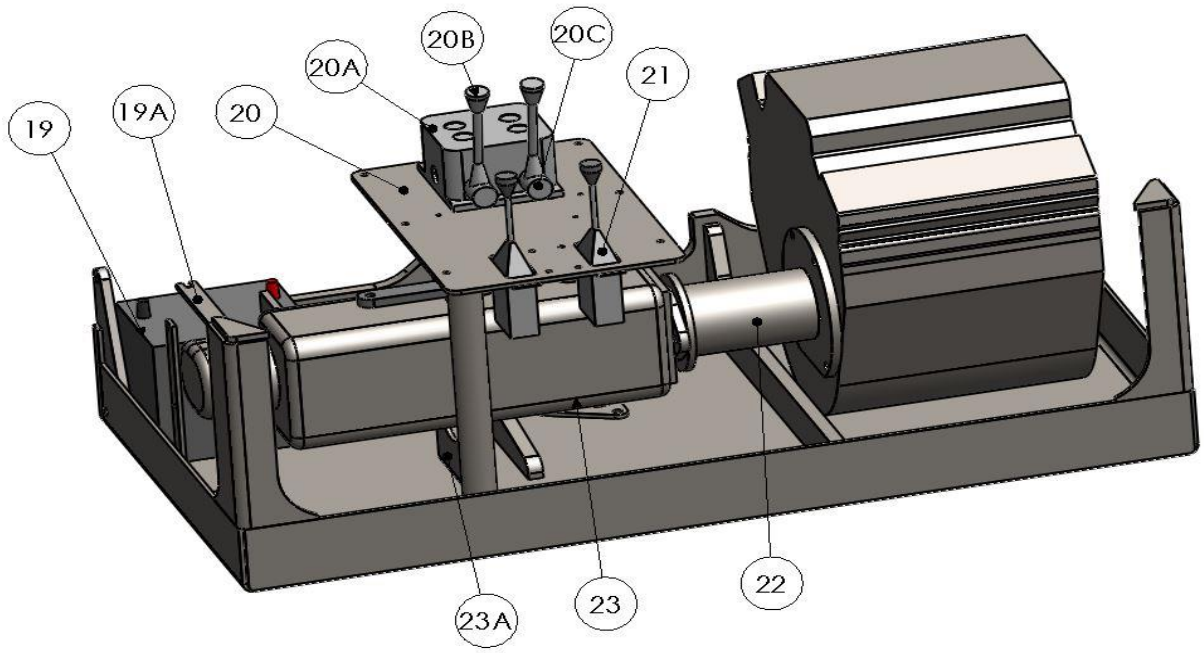

Ref	Part #	Description	Qty
19	**2005021**	**Battery, 12V**	1
19A	*810750*	*Bracket, Battery Hold-Down*	*1*
*	*2004952*	*Cable, Positive*	*1*
*	*2005958*	*Cable, Negative*	*1*
20	**603160**	**Valve Platform Assembly**	1
20A	*2004860*	*Valve, Cylinder Control*	*1*
20B	*2004871*	*Control Handle*	*2*
20C	*2004859*	*Pivot Box Assembly*	
21	**600870**	**Lever Assembly, Track Control**	2
*	*2004802*	*Hydro Centering Spring, Track Lever*	*2*
*	*2001920*	*Rod End, ¼" NF*	*6*
*	*2001481*	*Nut, ¼" NF*	*6*
*		*All Thread, ¼" NF*	
*		*4 ½" Short, To Centering Spring*	*2*
*		*5" Long, To Pump Lever Arm*	*2*
22		**Cover, Pump Coupler**	1
*	*2004466*	*Coupler, Pump Side*	*1*
*	*2004464*	*Spider*	*1*
*	*2004465*	*Coupler, Engine Side*	*1*
*	*805235*	*Spacer, Lovejoy Translift 2017*	*1*

Ref	Part #	Description	Qty
23	**2003833**	**Hydraulic Pump**	1
*	*2003522*	*Recessed Plug*	*1*
23A	*810720*	*Mount, Hydraulic Pump*	*1*
*	*601090*	*Lever Arm*	*2*
*	*2004008*	*Level Gauge*	*1*
*	*2005906*	*Cooling Fan Assembly*	*1*
*	*810740*	*Bracket, Cooling Fan*	*2*
*	*2004939*	*Ignition Switch, 10" Round Style*	*1*
*	*2006228*	*Key Holder*	*1*
*	*2006280*	*Eng. Wire Harness, Kohler CH940*	*1*
*	*2006270*	*Muffler Kit, Kohler CH940*	*1*
*	*2006290*	*Spark Arrestor, kohler CH940*	*1*
*	*2006310*	*Air Filter, Kohler CH940*	*1*
*	*2006320*	*Oil Filter, Kohler CH940*	*1*
*	*2006330*	*Oil Pressure Switch, Kohler CH940*	*1*
*	*2004940*	*Starter, Kohler CH940 / CH730*	*1*
*	*2006350*	*Spark plug, Kohler CH940*	*1*
*	*2003907*	*Fuel Filter*	*1*

** Not Pictured*

Covers View

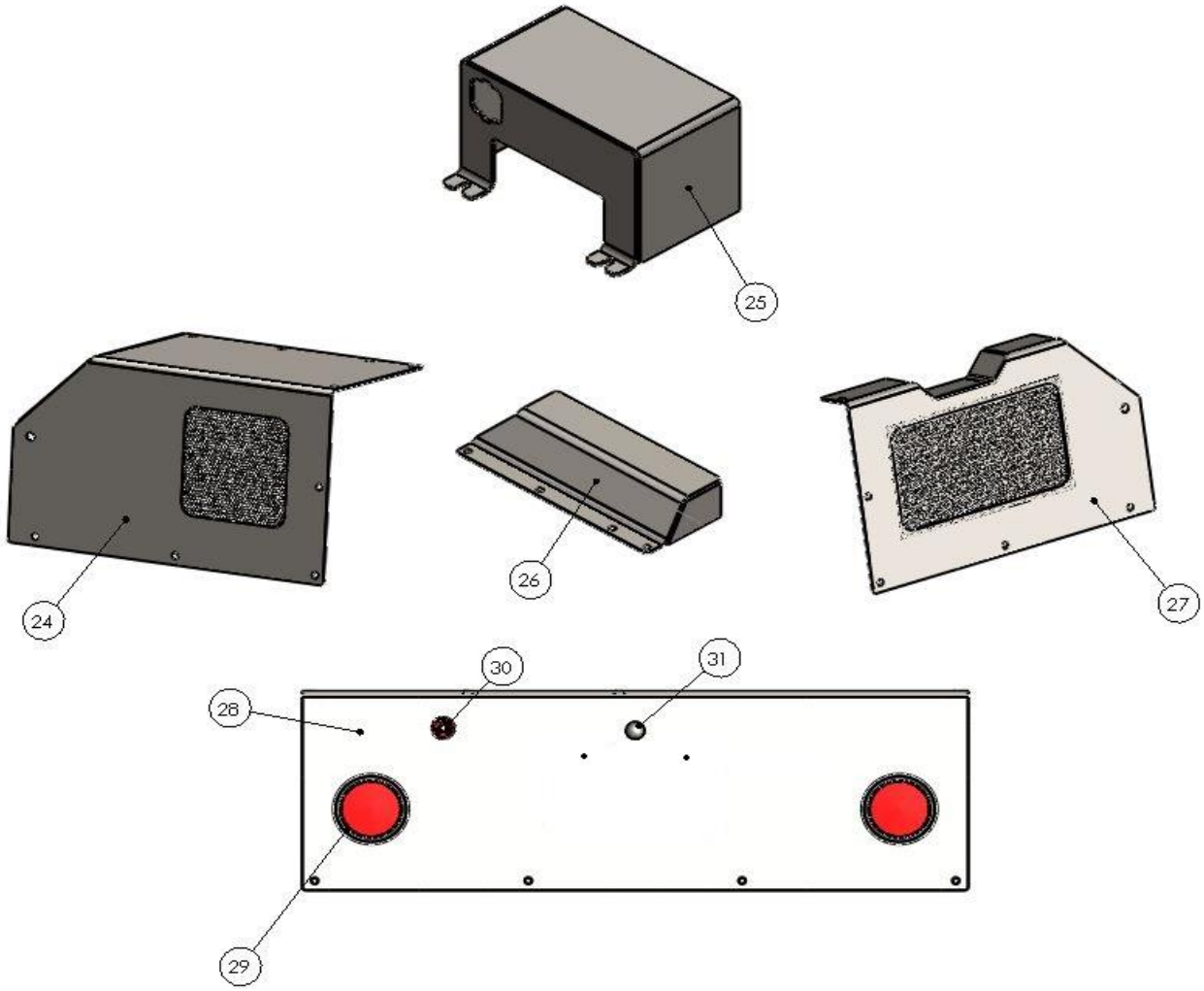

Ref	Part #	Description	Qty
24	**600440**	**Panel, Left Side**	1
25	**601010**	**Cover, Cylinder Valve - Kohler**	1
26	**600410**	**Muffler Cover**	1
27	**600430**	**Panel, Right Side**	1
28	**600420**	**Panel, Rear Cover**	1
29	*2004958*	*Taillight Assembly*	*2*
*	*603180*	*Wire Harness, Taillight*	*1*
30	*2006079*	*Emergency Stop Switch*	*1*
31	*2004957*	*License Plate Light*	*1*

** Not Pictured*

Note: All panels attach with ⅜" NC x 1" Grade 5 hardware.

Tow and Wheel View

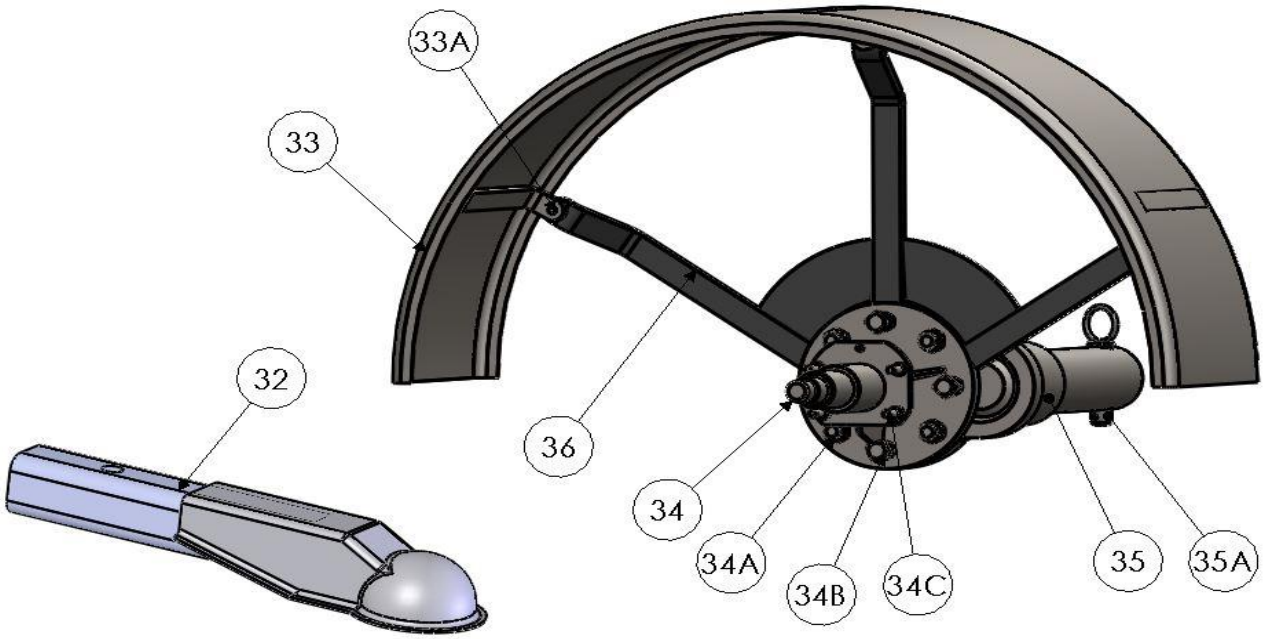

Ref	Part #	Description	Qty
32	**600120**	**Tow Hitch Assembly**	1
*	*2005909*	*Latch Repair Kit*	
*	*600750*	*Break-away Switch Assembly*	
33	**600150**	**Fender Assembly**	2
33A	*2000194*	*Bolt,⅜" NC x 1", Grade 8*	*6*
34	**600260**	**Spindle Assembly (with Nut)**	2
		**Please specify Left or Right side*	
34A	***2001073***	***Bolt, ⅝" NC x 3"***	*8*
	2001648	*Nut, ⅝" NC, Center Lock*	*8*
34B	***2001018***	***Set Screw, ½" NC x 1½", Square Head***	*8*
	2001580	*Jam Nut, ½" NC*	*8*
34C	***2000194***	***Bolt,⅜" NC x 1", Grade 8***	*10*
	2002748	*Nut, ⅜" NC Gr. 8*	*10*
35	**603170**	**Dolly Pivot Assembly**	2
		**Please specify Left or Right side*	
35A	*600240*	*Dolly Pin Assembly*	*2*
36	**500210**	**Fender Mount Repair Kit**	
		**Requires welding*	
*	*2002759*	*Wheel, 16 x 6*	*4*
*	*600500*	*Stand*	
*	*600360*	*Pigtail Lights Assembly*	*1*

** Not Pictured*

Brake View

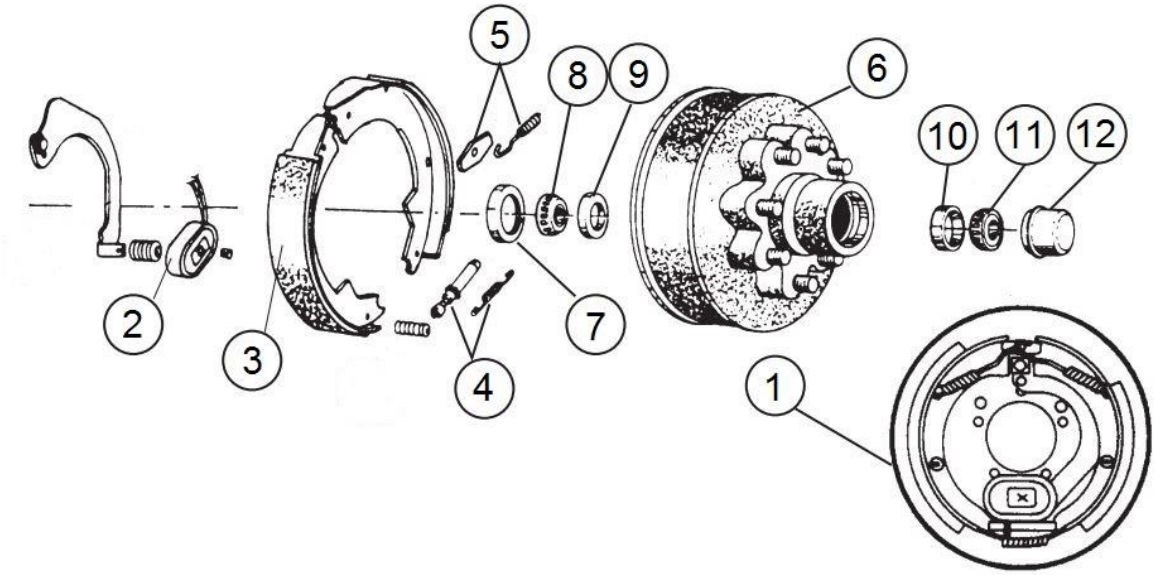

Ref	Part #	Description	Qty
1	2002753	Brake & Backing Plate Assembly (LH)	1
1	2002754	Brake & Backing Plate Assembly (RH)	1
2	2002771	Magnet Kit (One Side)	2
3	2002758	Brake Shoe Kit (One Side)	2
4	2002774	Self Adjuster Kit (One Side)	2
5	2002776	Return Spring Kit (Both Sides)	1
6	2002750	Hub & Drum Assembly	2
7	2004045	Seal, Wheel	2
8	2001964	Bearing, Inner (Timken)	2
9	2001965	Race, Inner (Timken)	2
10	2001967	Race, Outer (Timken)	2
11	2001966	Bearing, Outer (Timken)	2
*	2002760	Nut, Spindle	2
*	2006033	Cotter Pin, 5/32" x 2½"	2
12	2002746	Dust Cap	2
*	*2006090*	*Wheel Stud*	
*	*2006032*	*Lug Nut*	

** Not Pictured*