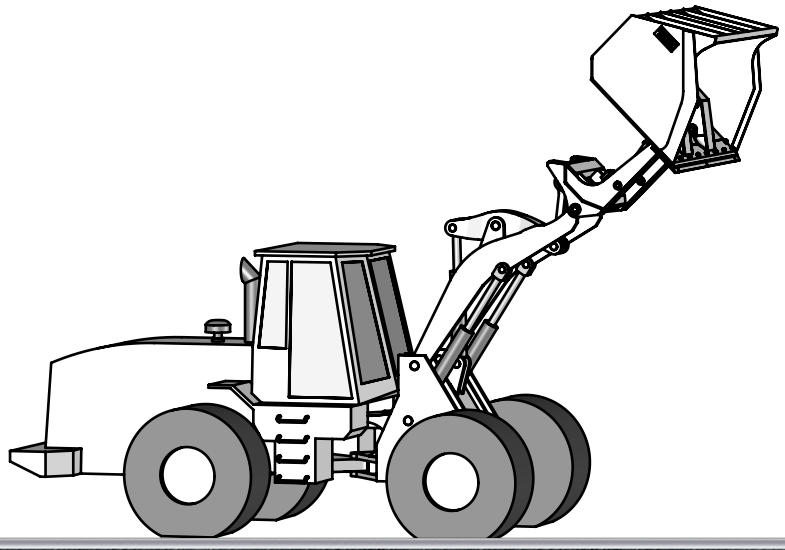

TINK BUCKETS

2000 Series Bucket

Tink, Inc.

2361 Durham Dayton Highway
Durham, CA 95938

◊

800-824-4163

◊

Hours:

Office and Parts Department: Mon-Fri 7:00 to 5:00
Shipping and Receiving: 7:00-3:30

Table of Contents

Introduction 2-19
Safety Precautions *2-3*
General Installation *4-5*
Installation and Testing *6-8*
Hydraulic Setup and Adjustment *9*
Roll-Out Bucket Overview *10-11*
Product Identification *12*
Warranty Policy *13*
Policy Procedure *14*
Picture Taking Guide *15*
Maintenance *16-19*
Operating Procedure 21-31
Standard Operating Procedure *22-23*
Other Considerations *24-31*
Parts 33-38
2000 Series Subframe *34-35*
Cylinder *36*
Bolt-On Edge System *37*
Bucket Accessories *38*
Troubleshooting Guide 39-40

Introduction

General Safety Precautions 2
Installation/Testing/Maintenance/Repair Safety 3
General Installation 4
Checking Stops 5
Installation and Testing 6-7
Installation and Testing Notes 8
Hydraulic Setup and Adjustment 9
Roll-Out Bucket Overview 10
Roll-Out Bucket Subframe 11
Product Identification 12
Warranty Policy 13
Policy Procedure 14
Picture Taking Guide 15
Maintenance 16-17
Maintenance Monthly and Yearly Checklist 18
Checking Roll-Out Stops 19

Safety Precautions

General Safety Precautions

Because Tink cares about your safety, this book includes references to specific safety precautions that you should be aware of when handling the Tink Bucket. These safety concerns are accompanied by icons which will alert you to a potential safety hazard or general precaution. As you read this book, be sure to pay attention to those icons and the information that follows.

Safety Icons and Definitions

DANGER

Danger: used in major hazard situations where an immediate hazard presents a threat of death or serious injury to employees.

WARNING: represents a level between danger and caution. Used to warn against potential injury to person.

CAUTION: used to warn against potential hazards, awareness of unsafe practices, or actions that may result in damage to property.

NOTE: used as a reminder or for a helpful tip. Notes can be found throughout the handbook in shaded boxes.

NOTE: The following safety advisories are an overview of general precautions to take when operating heavy machinery. For job specific safety advisories, please refer to the safety icons used throughout the book.

- Never operate equipment without reading the operators manual.
- Observe all safety signs and instructions posted on equipment.
- Always wear appropriate safety apparel.
- Do not operate under the influence of drugs, alcohol, sleep deprivation, or anything else that inhibits motor function.
- Do not operate equipment discovered to have a defect.
- Never use a Tink bucket for anything other than intended use.
- Do not leave the operator seat while the equipment is running.
- Keep bucket low and close to the ground while traveling.
- Never stand under any bucket or raised loader arms.
- Always relieve hydraulic pressure before disconnecting any lines.
- Learn to operate a loader equipped with a Tink bucket away from people, objects, and structures.

FOR WARRANTY CONSIDERATION PLEASE CALL 800-824-4163

WARNING

Do not exceed the loader manufacturer's tip load capacity.
Do not exceed the Tink bucket's rated load (see page 12).

Safety Precautions

Installation/Testing/Maintence/Repair Safety Precautions

WARNING
Please follow all safety precautions when performing maintenance or repairs.

Safety During Maintenance

Follow these safety precautions, including proper bucket placement, whenever performing bucket maintenance. This includes daily, monthly and yearly maintenance as well as inspections and greasings.

- Roll out bucket hard against stops
- Set subframe and cutting edge firmly on ground
- Shut off engine; lock out ignition
- DO NOT WALK BETWEEN SUBFRAME AND BUCKET. Stand to one side and walk around bucket.

Safety During Hydraulic Servicing

Follow these safety precautions anytime the hydraulic system is serviced. This includes hose replacement, valve repair, and cylinder repair.

- Roll bucket out hard against stops
- Set cutting edge firmly on ground
- Block under subframe with heavy cribbing; make sure bottom of bucket is tilted forward past vertical
- Shut off engine; lock out ignition
- Relieve system pressure before opening system.
- DO NOT WALK BETWEEN SUBFRAME AND BUCKET. Stand to one side and walk around bucket.

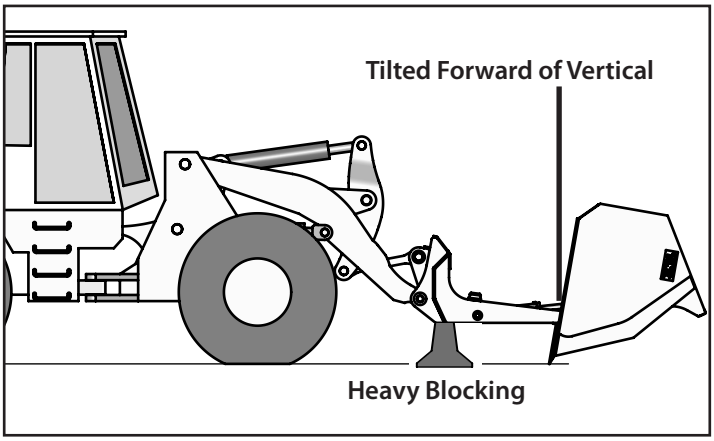

General Installation

General Installation

Pin-on Tink Buckets pin to the loader using the existing loader pins. If Tink is unable to design the attachment so that existing loader pins can be utilized custom pins will be provided.

Hook-On Tink Buckets mount to the loader using the quick coupler female system offered by the loader original equipment manufacturer (OEM). Tink will manufacture the quick coupler female(s) only if authorized to do so by the loader OEM. Tink is responsible for proper manufacturing and fit of the females as per the instructions and drawings provided by the loader OEM. ***Tink is not responsible for the operation or performance of the coupling system.***

Quick Coupled Tink Buckets mount to the loader using dealer supplied third party females (ACS, CWT, JRB, Pemberton, etc.) Tink is responsible for proper female coupler installation as per the instructions provided by the manufacturer of the third party coupling system. ***Tink is not responsible for the fit, operation or performance of the coupling system.***

Dump/Rollback Stops are factory installed when necessary. Because loader arms are not always perfectly matched, ***it may be necessary for the dealer to shim or adjust the stops***. In some instances the stops are shipped loose and are to be installed by the dealer.

(See "Checking Roll-Out Stops" on page 5.)

Hydraulics

Third Function Hydraulic Valve necessary to operate the Tink Claw, Tink Roll-Out Bucket, Tink Trash Clamp Bucket and the Roll-Out action of the Tink Grabber is **NOT** supplied by Tink unless specified otherwise in writing.

Fourth Function Hydraulic Valve necessary to operate the Tink Grabber top clamp is **NOT** supplied by Tink unless specified otherwise in writing.

Jumper Hoses and/or Couplers necessary to connect Tink buckets to the loader hydraulics are **NOT** supplied by Tink unless specified otherwise in writing.

Minimum Hydraulic Flow necessary to operate the Tink Claw is 8 GPM @ 1500 PSI.

Speed of Bucket

Tink buckets should not roll out any faster than 3.0 seconds from stop to stop. The dealer is responsible for checking the roll-out speed once the bucket is installed. Do not modify or adjust the hydraulics for a roll out quicker than 3.0 seconds. Roll-out speed is slower for larger buckets.

A Note on Testing the Bucket

Tink buckets should only be used in production once they have been correctly installed and fully tested. When testing, make movements slow and cautious until you are comfortable with the product. The instructions on the next few pages will describe the installation and testing process.

Checking Stops

Note: the Tink roll-out bucket action should be used for all loading functions.

Dump Stops

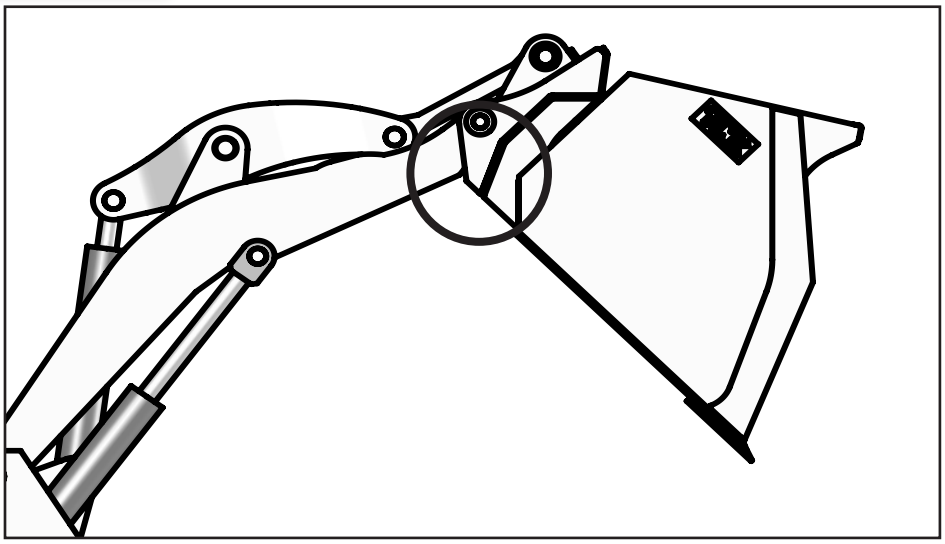

In the event of a conventional dump, check dump stop for proper contact. Check linkage for over-center or bind. LEFT and RIGHT dump stops should contact loader arms at the same time. Periodically check dump stops for damage or wear.

NOTE: Some loaders use linkage stops. Please refer to loader manual in conjunction with this book.

Rackback Stops

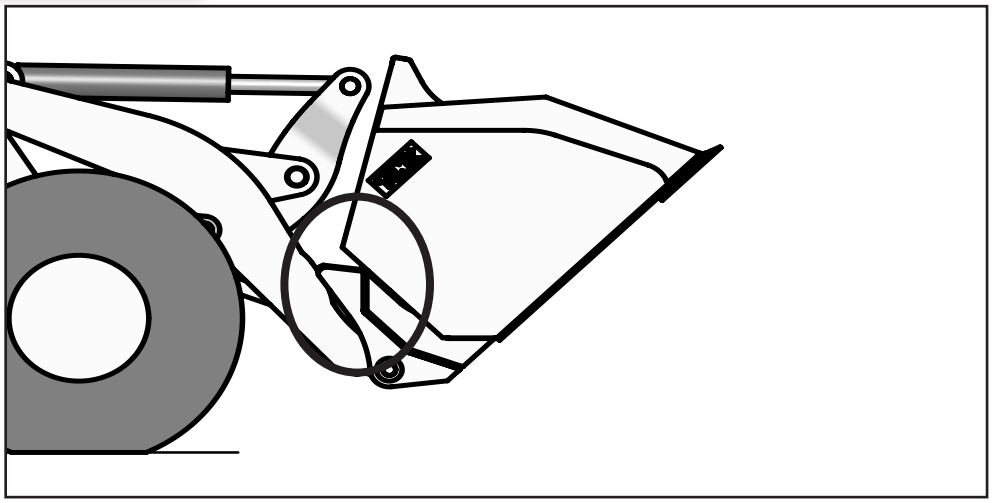

Check rack back stops for proper alignment. Check linkage for binding or interference with the Tink bucket. RIGHT and LEFT stops should contact loader arms at the same time. Periodically check stops for damage or wear.

Installation and Testing

Please refer to your loader operator's manual in conjunction with this guide.

Safety Precautions

CAUTION WHEN TESTING! Tink buckets may require more room to operate than a conventional loader bucket. Before operating the Tink bucket, make certain bystanders are at a safe distance from the Tink bucket. Provide extra clearance between the Tink bucket and any structures or objects.

TINK BUCKET HYDRAULIC COMPONENTS will contain air that will cause the bucket's operation to be sporadic and uncontrollable. Make all movements small, slow and cautious until it is obvious that the air has been removed from the system. When the Tink bucket is operating smoothly, cycle it completely. **Look at each fitting for oil leaks and tighten any fittings that are leaking. Check the loader hydraulic oil level and add if necessary.**

TINK BUCKET CYLINDER SPEED from closed to extended must not be faster than 3 seconds. Cylinder speed from extended to closed must not be faster than 2.7 seconds. Maximum pressure rating for all Tink buckets is 4000 PSI.

OPERATE THE TINK BUCKET without a payload, away from people, objects, and structures until the operator is comfortable with how the bucket functions and reacts to his/her movement of the loader control levers. Then follow the same procedure above with a payload. Continue to practice away from people, objects and structures until the operator is proficient enough to use the loader and bucket as intended.

ATTACH THE TINK BUCKET to the loader using the pins supplied by the loader manufacturer. The loader arm pin bosses must be aligned as close as possible with the Tink bucket pin bosses before attempting to install the pins. When aligned correctly the pins will go in the bosses with little effort and they can be secured by installing the pin bolts. **Never use excessive force to insert the mounting pins.**

BUCKET STOPS prevent the bucket from traveling beyond the range intended by the loader manufacturer. If the stops are not factory installed, install them now. Some loaders use stops built into the loader linkage and installation of stops in both direction are not always necessary. Refer to information provided by the loader manufacturer.

START THE LOADER using the loader manufacturer's starting procedures. Roll the bucket back until the stops make contact. Raise the loader arms all the way up and tilt the bucket until the stops make contact. Check for interference or binding. Check dump angle and degree of angle at carry.

NOTE: If the Tink bucket movement travels in the opposite direction the operator expects when he moves the control lever, simply switch hoses at the bucket supply and return ports. Do not switch hoses after the valve as the system may not operate properly.

Installation and Testing

NOTE: Not all Tink buckets will roll out at ground level. If you find that the bucket makes contact with the center pull when rolled out at ground level, instruct the operator to tilt the bucket forward slightly before rolling out. This is not a design flaw. Tink buckets are designed to keep the load close to the loader and provide maximum capacity, lift and reach; sometimes this prevents a ground level roll-out.

THE FULL FACE OF BUCKET STOPS must make contact with the loader. Contact must be made in areas acceptable to the loader manufacturer. If proper contact is not made, shim or reposition the stops.

HYDRAULIC HOSES (not supplied by Tink) are used to connect the loader hydraulics to the Tink bucket. The hoses must be routed from the loader hydraulic lines group on the loader arms, to the lower bucket pivot point, up to the supply and return ports on the Tink bucket.

CARE MUST BE TAKEN to insure that the hydraulic lines will not become pinched or stretched when the loader tilt function is utilized. Make sure all four hydraulic fittings are tight and that the hoses have been secured to the loader arms and the Tink bucket.

MAXIMUM FLOW AND PRESSURE for most Tink Buckets are preset at the factory. For some Tink Buckets it is necessary for the dealer to set the flow and/or PSI. If Tink provides adjustable hydraulic components for the dealer's convenience, instructions are supplied. If it is necessary to make adjustments to the loader hydraulic components, refer to the loader's manual.

Installation and Testing Checklist

- ☑ Attach bucket to loader
- ☑ Install or shim stops if necessary
- ☑ Check loader oil level
- ☑ Start loader, roll bucket back to make contact with stops
- ☑ Check bucket contact with stops
- ☑ Check, tighten and secure hydraulic fittings and hoses
- ☑ Check fittings for leaks

Installation Notes

For your convenience we have provided you with a place to record important information regarding the installation of your bucket. Please keep track of these things as a reference. Keeping track will prove useful when replacing and/or ordering parts.

Tink Serial Number:

Loader Model and Serial Number:

Machine Hours at Installation:

Installation Date:

Roll-Out Speed:

Notes:

Hydraulic Setup and Adjustment

Tink Speed Control Valve

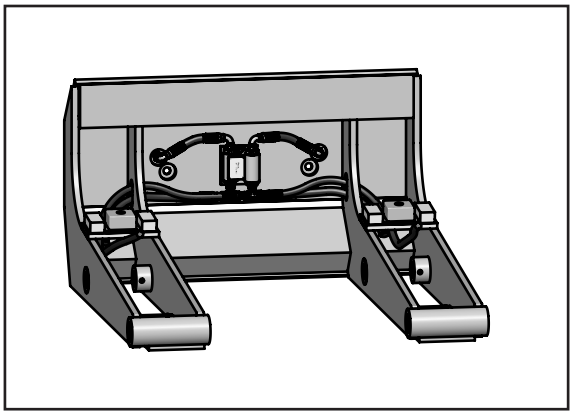

No adjustment necessary. The Tink speed control valve is rated for loaders with working pressures up to 3950 psi and pump flow up to 80 GPM. If roll-out speed is slower than 4.5 seconds, call Tink.

Cross Over Relief Valve

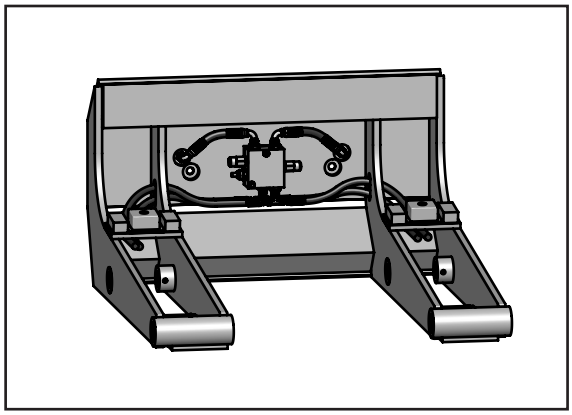

Adjust needle valve until roll-out speed does not exceed 3.5 seconds from stop to stop.

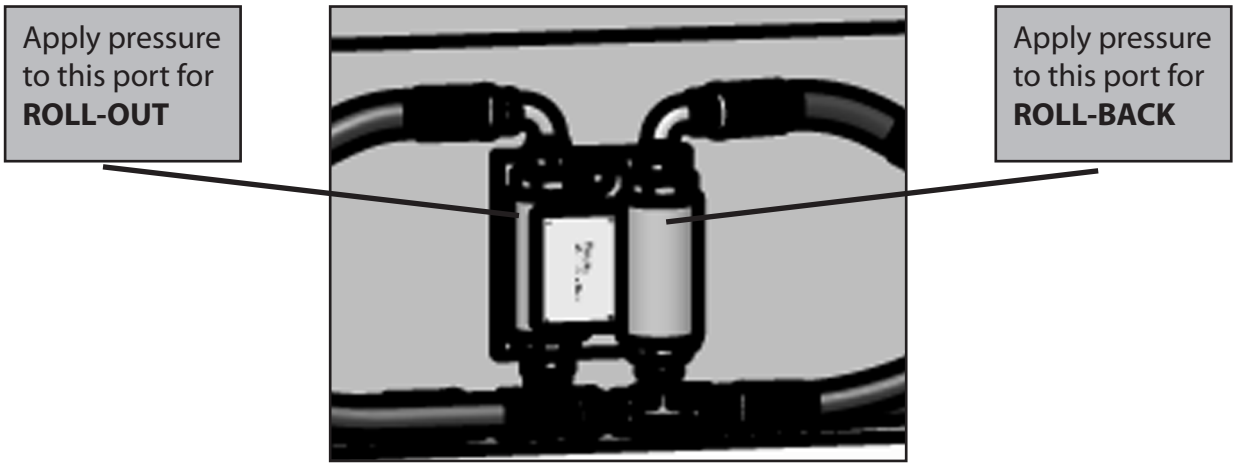

Each barrel is calibrated to the base end (roll-out) or the rod end (roll-back) of the cylinder. If you need to reverse the action of the hydraulic circuit, swap hoses at ports P1 and P2. **Do not swap hoses at ports A and B.**

Every effort has been made to supply your bucket with the jumper hoses assigned to the correct bulkhead fittings. If you need to swap hoses or reassign both hoses to one side of the subframe, contact Tink. We have hose kits in stock (see page 35).

Roll-Out Bucket Overview

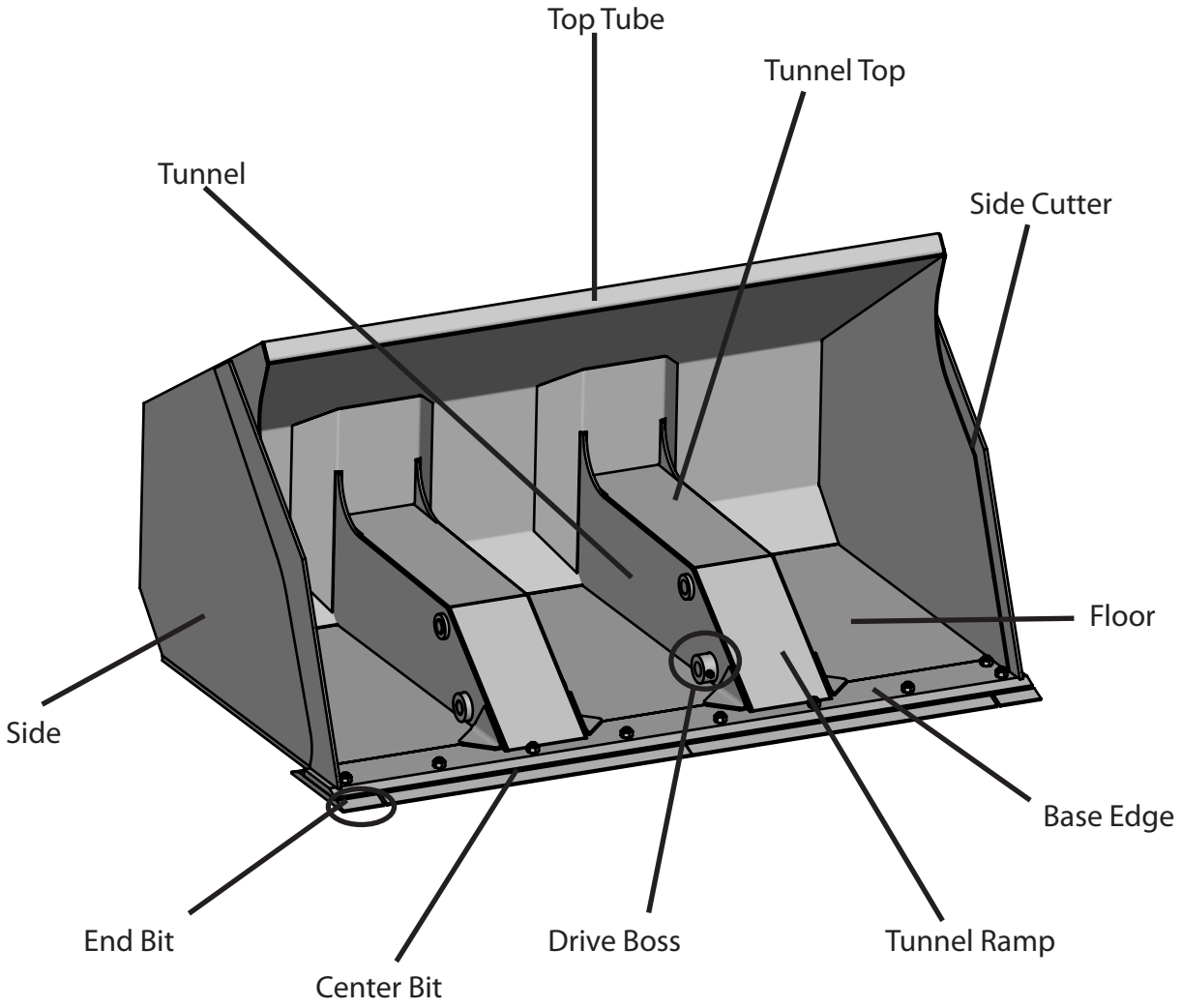

Roll-Out Bucket Overview

Bucket Subframe

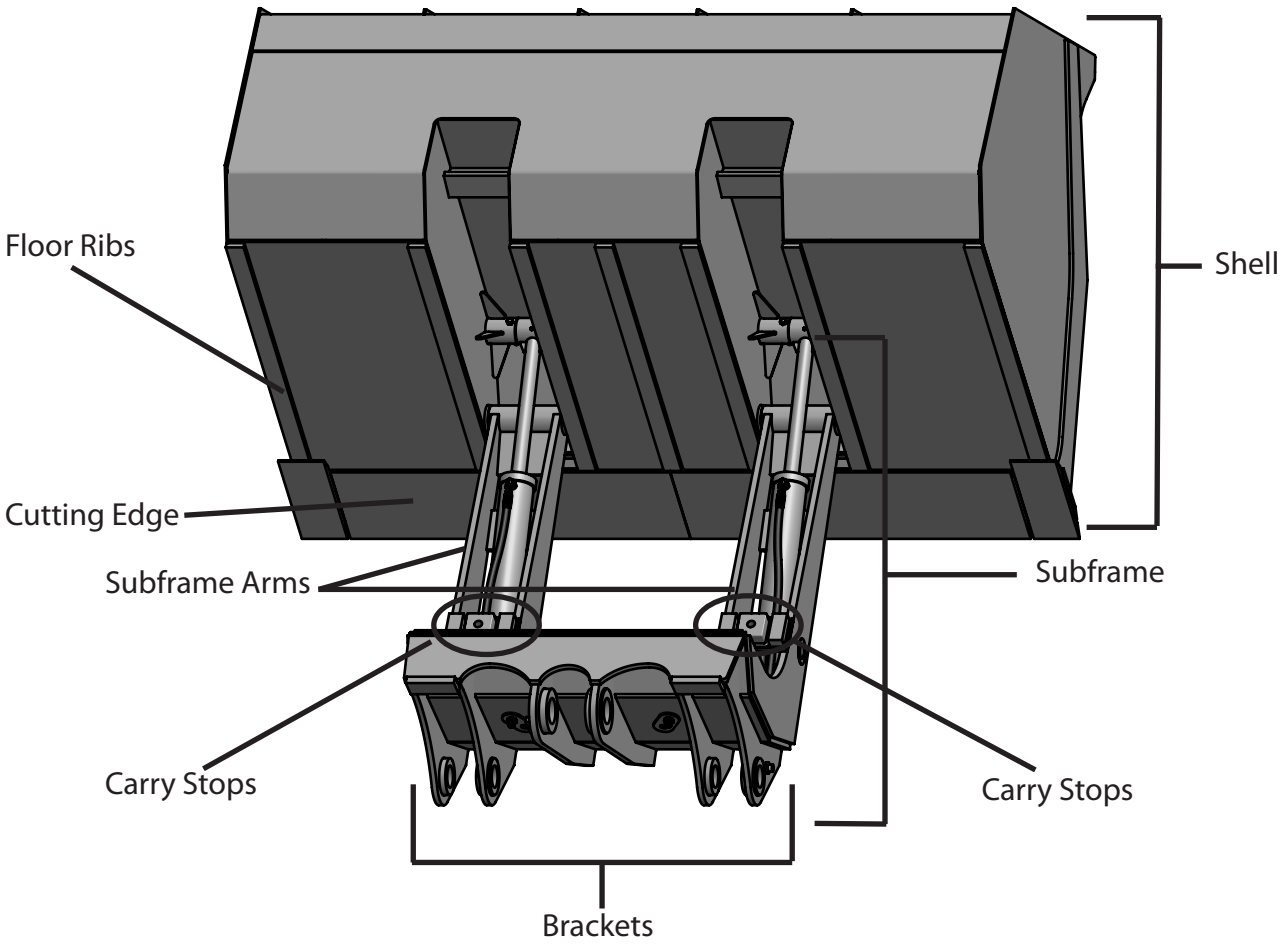

Product Identification

When you call Tink for an inquiry, Tink's representative will ask you for your serial number. In order to make the process as efficient as possible, please familiarize yourself with the serial number location below. We recommend that you write down your serial number in an accessible place.

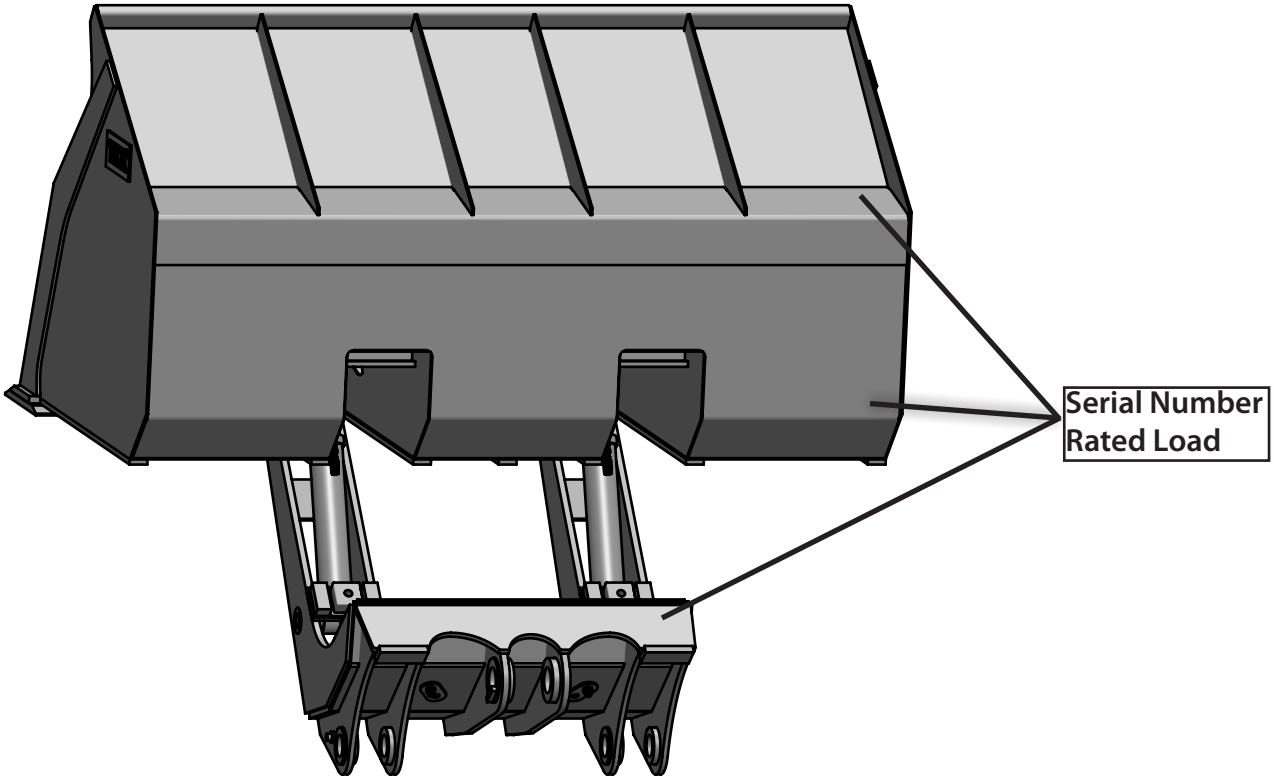

WARNING

ANY REPAIR OR MODIFICATION TO TINK PRODUCT WITHOUT APPROVAL FROM TINK, INC. WILL VOID WARRANTY.

$$\text{Rated Load} = \frac{\text{Loader Rated Load} - \text{Extra Weight of Tink Bucket}}{\text{Material Weight per Cubic Yard}}$$

Note: S.A.E. recommends that the all day working load not exceed half of the full turn tipping load.

For efficient ordering, record your product serial number here: _____

Warranty Policy

Questions About a Warranty? *CALL US FIRST!*

You must contact Tink for warranty consideration. Failure to do so may void warranty.

We like a "no surprises" approach when handling warranty claims. If a problem or failure occurs, please contact us immediately. Talking to one of our experts in the parts and services department will ensure that all parties know what to expect.

Tink's Guarantee

Tink products are guaranteed against failure due to defective design, workmanship or materials for a period of 1 year or 2,000 hours, whichever comes first, from date of delivery to purchaser as validated by the **completed and returned warranty registration form.** If Tink Inc. finds, upon physical inspection of product or product components returned freight unpaid, and/or upon review of warranty claim including **photos** of alleged defects noting that warranted products are defective in design, material or workmanship, such products will be, at Tink's option, replaced or repaired.

Authorization

All warranty work and returns must be authorized by Tink, Inc. prior to any work being performed or returns made. If the end user, dealer, or other entitiy performs work or makes a return without authorization he does so with the understanding that Tink, Inc. shall not be obligated for the costs of any such unauthorized expense or actions. The purchaser of any products covered by this warranty understands and agrees that the sole and exclusive remedy against Tink, Inc. shall be for the replacement or repair of defective products as provided herein. All allowances will be paid at dealer cost with no provisions for overtime, mileage, freight charges, special services, downtime or loss of machine productivity. Dealer shop rate charges on approved repairs shall not exceed 70% of hourly rate.

Exclusions

Tink warranty is not extended or applied to:

- Failures, which in Tink's judgement are the result of misuse, negligence, accidents, improper installation, or failure to perform regular maintenance.
- Products or component parts not manufactured by Tink. Such items are subject to OEM's warranty, if any, of the respected manufacturer.
- Products improperly installed, maintained, or used not in accordance with all applicable Tink instructions.
- Products or components that are modified or changed in any way without written consent.
- Parts typically considered as wear items.
- Failure of product placed in an application for which it is not intended.
- Parts or product damage caused as a direct result of improper and/or untimely repair procedures.

If You Discover a Problem...

Gather Necessary Information and Photos → Call Tink (800-824-4163) → Obtain Authorization for Repairs or Returns → Repair the product using an approved Tink repair procedure (Tink Warranty Claim #) / Return the product to Tink within 15 days (Tink RMA #)

Policy Procedure

Call Us

Upon discovery of a product or failure on a Tink product that is within the warranty period, please call the Tink Service Department immediately (800-824-4163). Please inform the Tink representative that you consider the problem/failure to be eligible for warranty. Be prepared to provide Tink with the following information:

- Serial Number of the Tink product (see page 12)
- Part number, date purchased, date installed and hours of use (number of hours on prime mover if applicable)
- Prime mover machine brand and model information, and machine serial number
- Description of specific component failure
- Clear, focused photos of problem area (see next page)
- End user comments pertaining to the failure

NOTE: Any warranty claims by the purchaser not submitted to Tink within 30 days following the date the failure was discovered, or by reasonable inspection should have been discovered, will not be covered by this warranty.

Repairs/Warranty

If a defective product or component can be repaired at your location or in the field, Tink will instruct you regarding the approved repair procedures and issue a warranty claim number authorizing you to make those repairs. Flat rate hours will be quoted by the Tink service department for any repair judged to require more than two hours to complete. If problems occur that were not originally addressed, Tink must be contacted to authorize any additional labor hours. Tink cannot be responsible for work performed without prior notification.

Upon completion of the repair the warranty claim must include:

- A completed Tink Warranty Claim Form accompanied by a copy of the dealers service ticket. Claim must include a detailed description of the failure.
- Itemized list of parts used (part number, description, unit cost, quantity)
- Itemized breakdown of labor hours claimed (operation performed and time)
- Photographs showing the areas of failure and general condition of the Tink product (see page 15)

Returns

A Return Merchandise Authorization (RMA) number will be issued if it is deemed necessary to return the defective product or component to Tink for repairs or warranty evaluation. All shipping documents must show this number.

If the repair requires Tink parts you must refer to the Tink Warranty Claim Number when ordering those parts. Each replacement part will be shipped with a RMA number tag authorizing you to return the defective parts to Tink. Place the RMA tag on the defective part and ship prepaid to Tink within 15 days. All shipping documents must show this number or the part will be returned to you freight collect.

NOTE: Made-To-Order Products cannot be returned. Products Authorized for Return by Tink, Inc. are subject to a restocking charge of 25% of net price. The product will be inspected at Tink and upon acceptance the appropriate credit will be issued. Under no circumstances will credit be issued for a used product. Failure to ship defective part(s) to Tink within 15 days for evaluation will result in the cancellation of the warranty claim.

Freight/Freight Estimates

Outbound Freight is F.O.B. Durham, CA unless otherwise specified in writing. Tink will arrange shipping for the least cost and fastest service. Rates provided by Tink are estimates and only guaranteed if Tink, Inc. invoices customers with approved credit status for the freight charges.

Inbound Freight marked with the appropriate RMA number will only be accepted if the freight has been prepaid unless otherwise specified in writing.

Picture Taking Guide

Tink, Inc. is dedicated to the continuous improvement of our product. We thank you for submitting clear and accurate pictures of the defect or failure to assist in the evolution of future Tink buckets.

When submitting a request for warranty consideration, **Tink requires photos of the entire bucket as well as close-up photos of the problem area.** Please include the following pictures:

Serial Number

Right Profile with Cutting Edge

Subframe

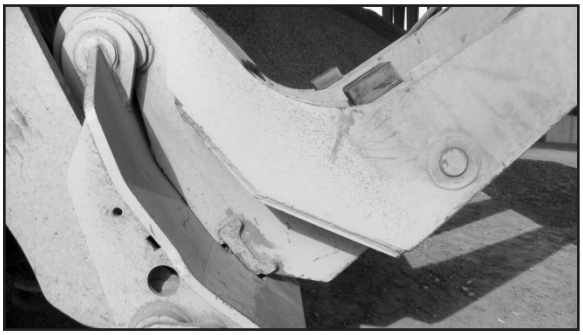

Side View of Subframes and Hooks

Left Profile with Cutting Edge

Close Up of Cutting Edge

¾ View of Bucket

Bottom of Cutting Edge

When taking overall photos, use the landscape setting of your camera.

When taking detailed photos of the problem area, use the macro setting.

Note: avoid using flash if possible.

TINK, Inc. • 2361 Durham Dayton Highway • Durham, CA 95938 • www.tinkinc.com

CALL TOLL FREE 800•824•4163

Maintenance

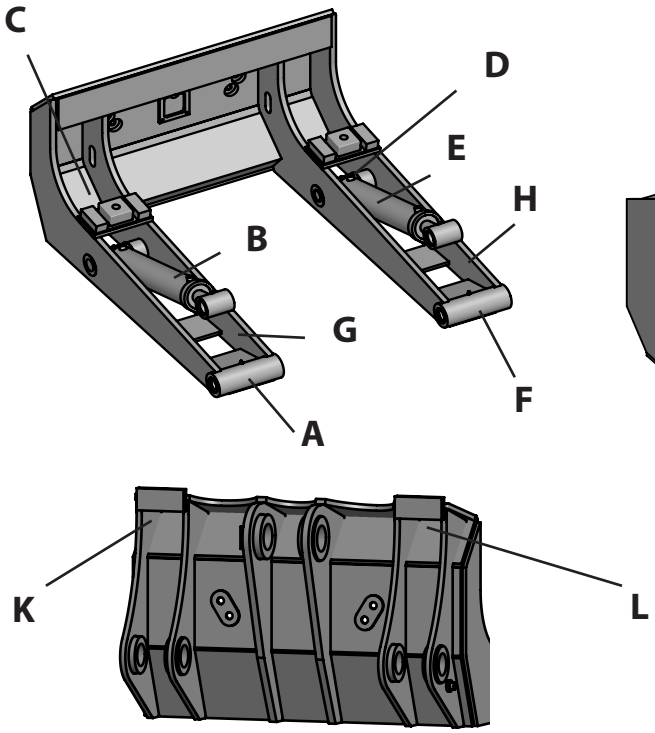

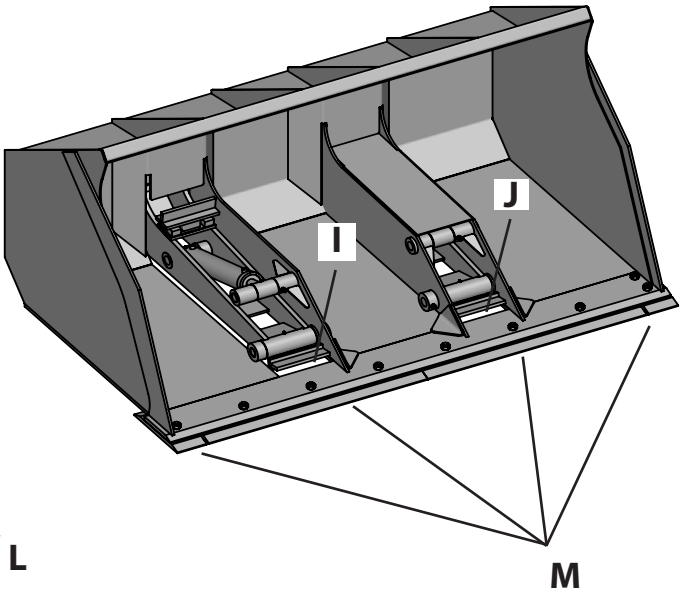

Grease Points A, B, C, D, E & F should be lubricated at least once every 8 to 10 hours. Buckets performing greater than normal duty cycles or working in abrasive conditions should be serviced more frequently.

Material Buildup in the subframe arms **G & H** (under each cylinder) can limit cylinder barrel travel, causing the cylinder rod to bend and/or the rod bushing to break off. **Inspect frequently and keep the area free of foreign material.**

Weld-in Mechanical Stops I & J prevent cylinder damage by not allowing the cylinders to over extend during the "Roll-Out" cycle. **Inspect stops daily for damage or excessive wear.** Measure the cylinder extended length to know if your stops need repair or replacement. Measuring instructions are available through Tink Parts Dept.

Loader Pins that connect the bucket to the loader need to be lubricated as per the instructions provided by the loader manufacturer. However, it is important that all bucket weight is off the pins prior to lubrication.

Inspect Pins and Pin Bolts Daily. A broken pin bolt is an indication that the lubricated bushing insert is not rotating around the pin. A "sloppy" pin fit indicates that there is excessive pin wear. Replace pins, hardened bushing inserts and pin bolts when necessary.

Bucket Stops K & L prevent the bucket from traveling beyond the range intended by the loader manufacturer. This prevents loader linkage lockup/damage and eliminates damage to loader or bucket components. Inspect stops daily for damage or excessive wear. Repair or replace when necessary.

NOTE: Tink warranty is not extended or applied to failures resulting from improper maintenance.

Maintenance

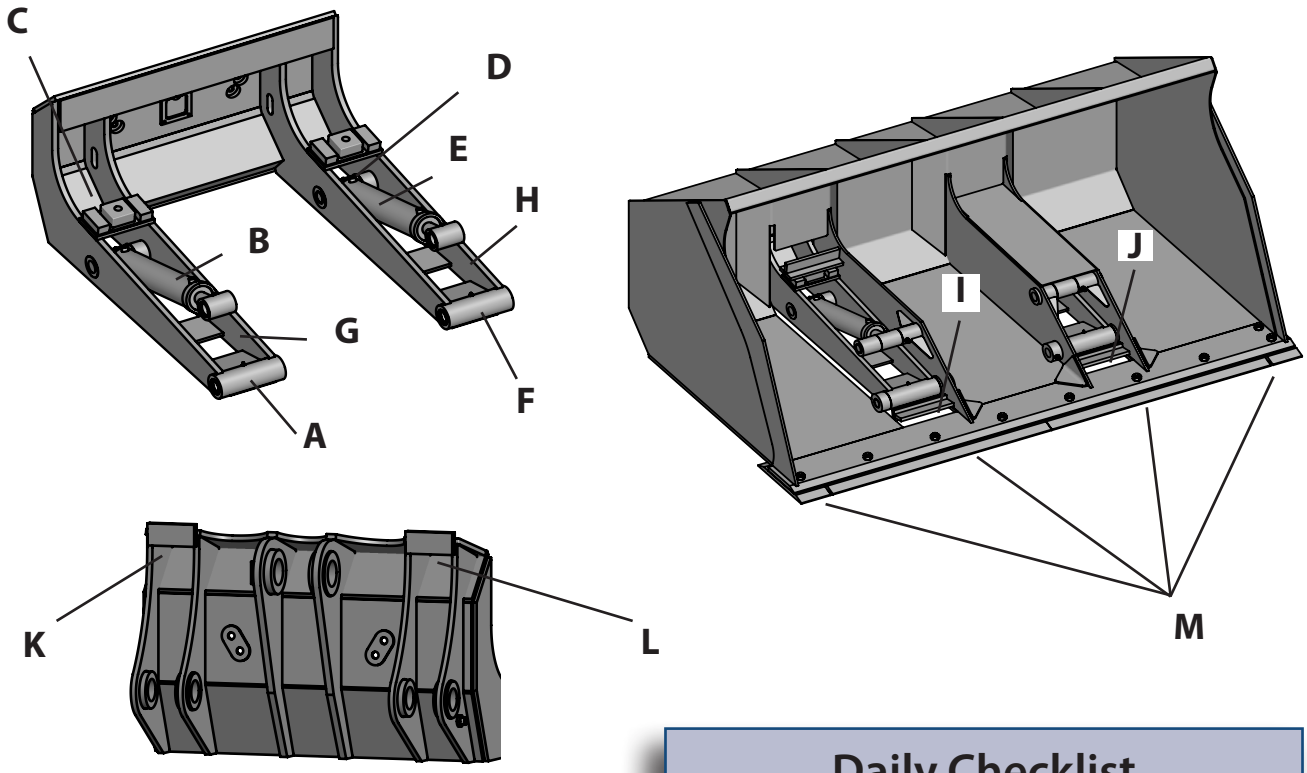

Replaceable Wear Edges M prevent premature wear of the weld-in edge and shell bottom. Inspect wear edge segments frequently, turn and/or propeller often, replace worn out segments and any missing nuts and bolts as required. (Note: If the front portion of the replaceable wear edge is rounded, it is an indication that the operator is placing too much loader weight on the front edge of the bucket. This can cause excessive loader mounting pin and bushing wear and/or structural failure. Instruct the operator to place the shell flat on the ground and to keep the loader weight on the tires.)

Inspect Bucket Daily for cracks, bends or other damage. Repair any damage immediately.

Inspect Bucket Hydraulics Daily for hose damage, pinch points, excessive wear, hydraulic leaks, etc. Check loader hydraulic oil level. Repair or replace any faulty components immediately.

Daily Checklist

- ✓ Lubricate Grease Points (6)
- ✓ Inspect Subframe arms, clear of foreign material
- ✓ Inspect all Stops for damage or wear. Repair or replace when necessary.
- ✓ Lubricate Loader Pins
- ✓ Inspect pins and bolts. Repair or replace when necessary.
- ✓ Inspect Wear Edges. Replace worn segments or missing nuts and bolts.
- ✓ Inspect Bucket Daily for quality control.
- ✓ Inspect Bucket Hydraulics Daily.
- ✓ Check Loader Hydraulic Oil Level.

Maintenance

Monthly Checklist

✓ Check cutting edge for uneven wear. Repair or replace when necessary.*
✓ Check welds for cracks.*
✓Check condition of rubber stops.
✓ Check hoses for leaks, abrasions or damage.
✓ Grease all zerk fittings until clean grease extrudes from pin gaps.
✓ Remove all debris from around cylinders, hoses and valves.

Yearly Checklist

✓Steam clean entire bucket.
✓Check entire bucket for cracks or excessive wear points. Repair any damaged areas.*
✓ Check extended length of cylinders. Rebuild roll-out stops if necessary. *

* Welding Instructions:
All weld repairs need to be performed by a competent welder using appropriate materials and practices. Grind out cracks completely before adding filler material. Tink recommends 7018 in position or uphill, or ER70S2 in position or downhill. Use multiple passes and full penetration techniques when applicable. Tink does not recommend hardfacing.

Contact Tink before commencing any repair if the repair is expected to be covered under warranty. FAILURE TO RECEIVE REPAIR AUTHORIZATION FROM TINK MAY VOID WARRANTY.

Checking Roll-Out Stops

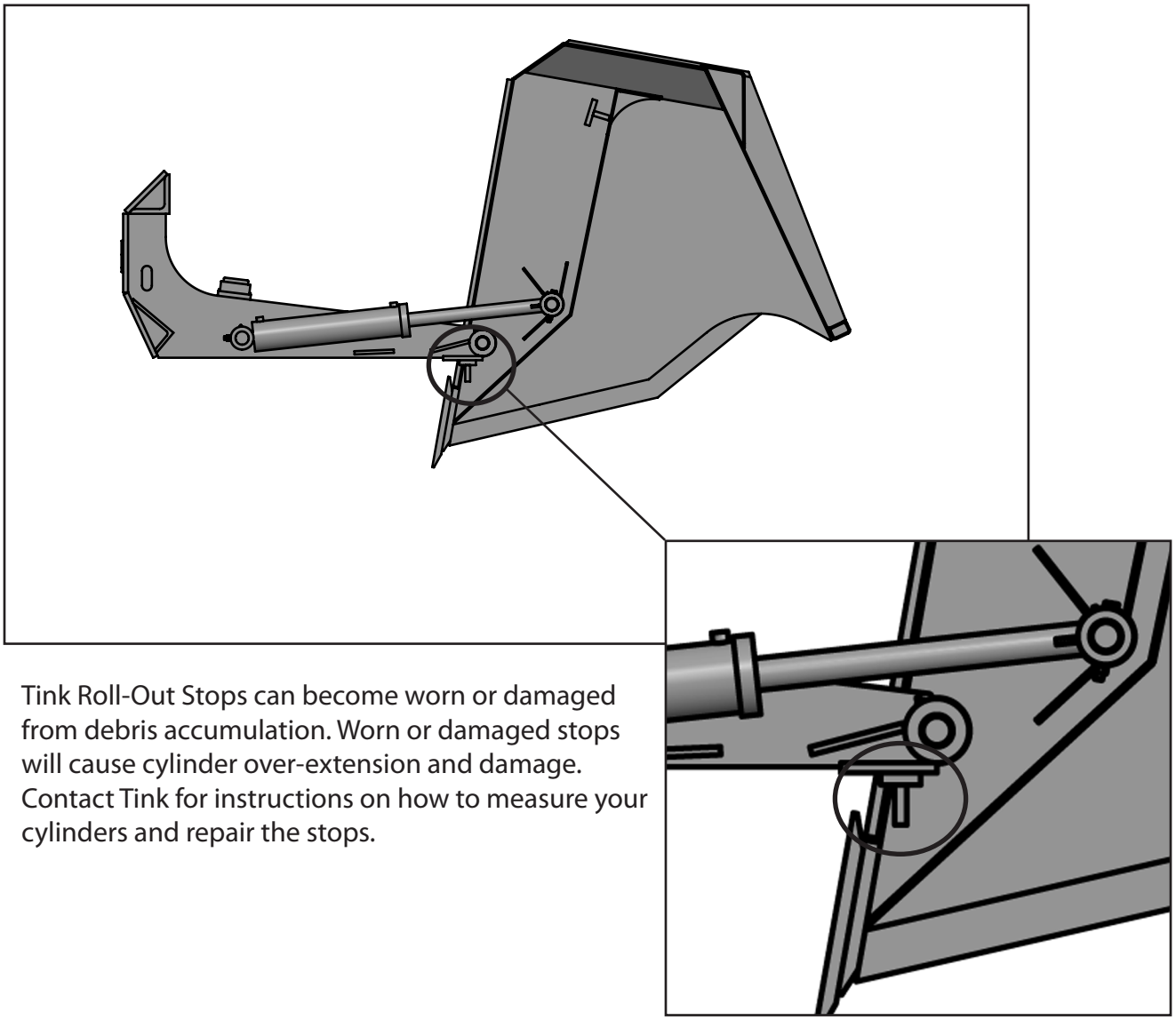

Tink Roll-Out Stops can become worn or damaged from debris accumulation. Worn or damaged stops will cause cylinder over-extension and damage. Contact Tink for instructions on how to measure your cylinders and repair the stops.

Operating Procedure

Standard Operating Procedure 22-23
Other Considerations 24-31
Stockpiles/Conventional Dumps 24
Floor Pits 25
Misuse of Bucket 26
Bucket Overload 27
Stickey Material (Subframe) 28
Sticky Material (Bucket) 29
Attacking the Pile 30
Proper Bucket Positioning 31

Operating Procedure

Standard Operating Procedure

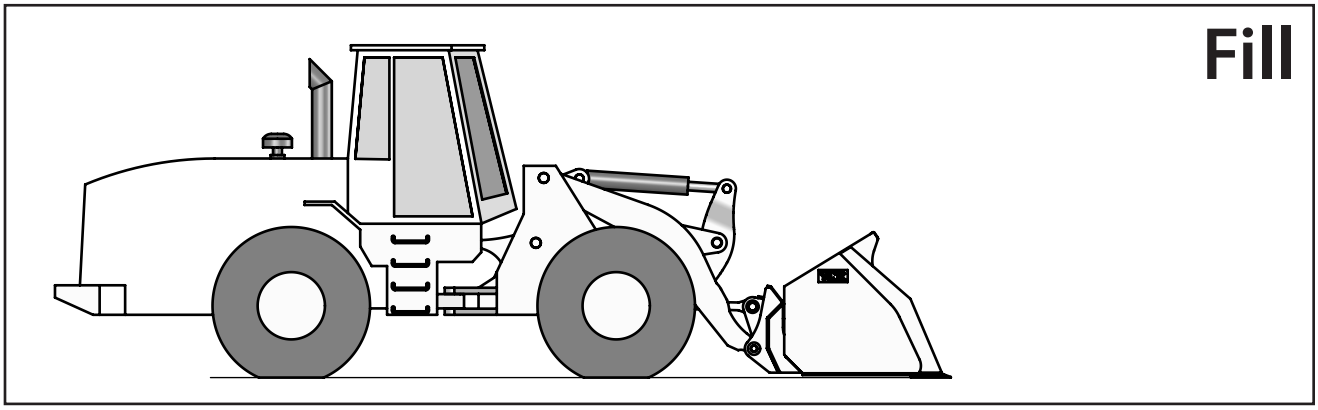

Attack the pile with the bucket flat and level; only the cutting edge should touch the ground.

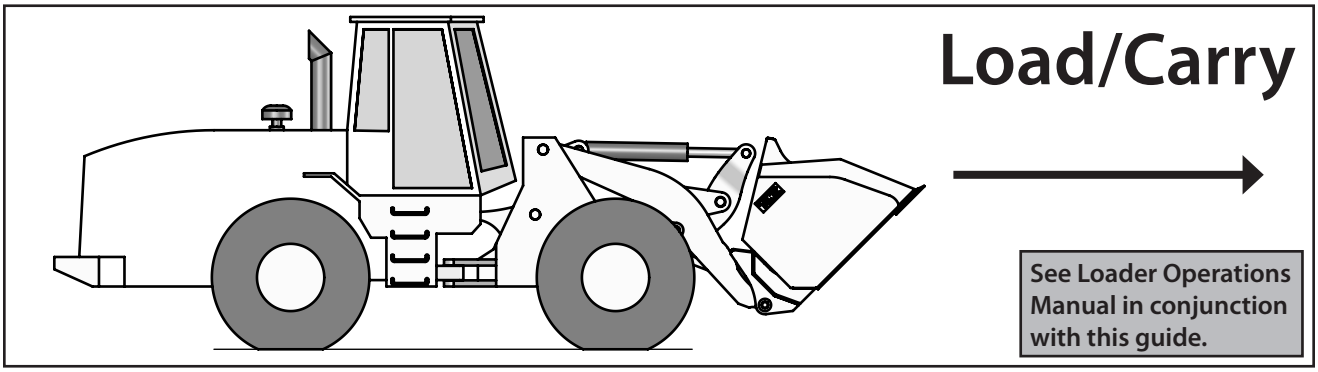

Scoop material using the tilt lever function. Move load to hopper or trailer in carrying position.

DANGER **Never travel with bucket elevated higher than the carry position.** **DANGER**

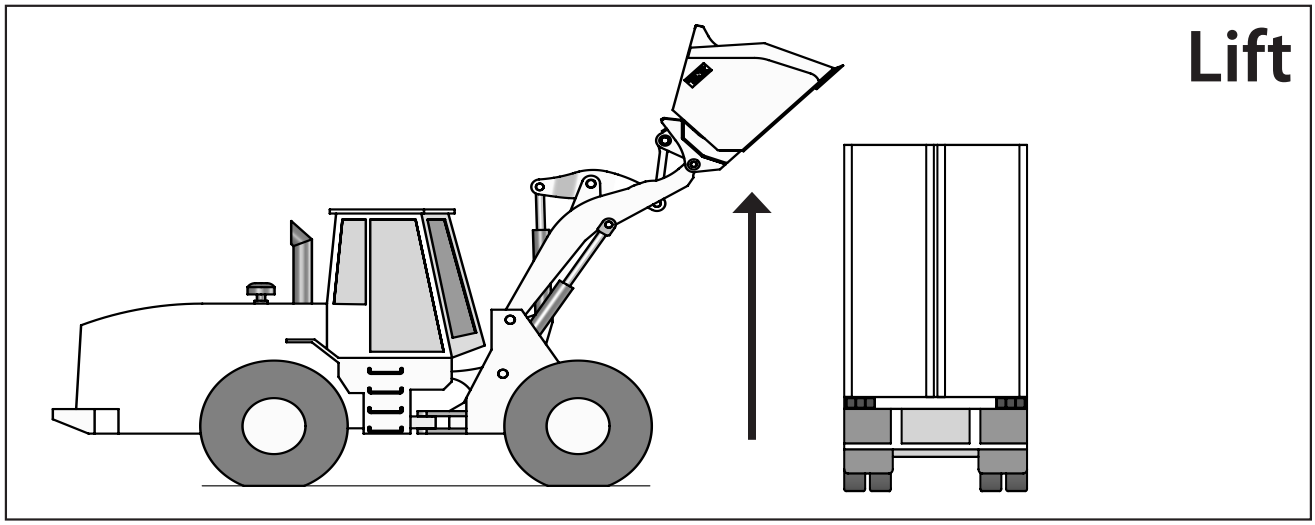

Bring loader to a stop. Lift load to desired height as close to trailer as possible.

Operating Procedure

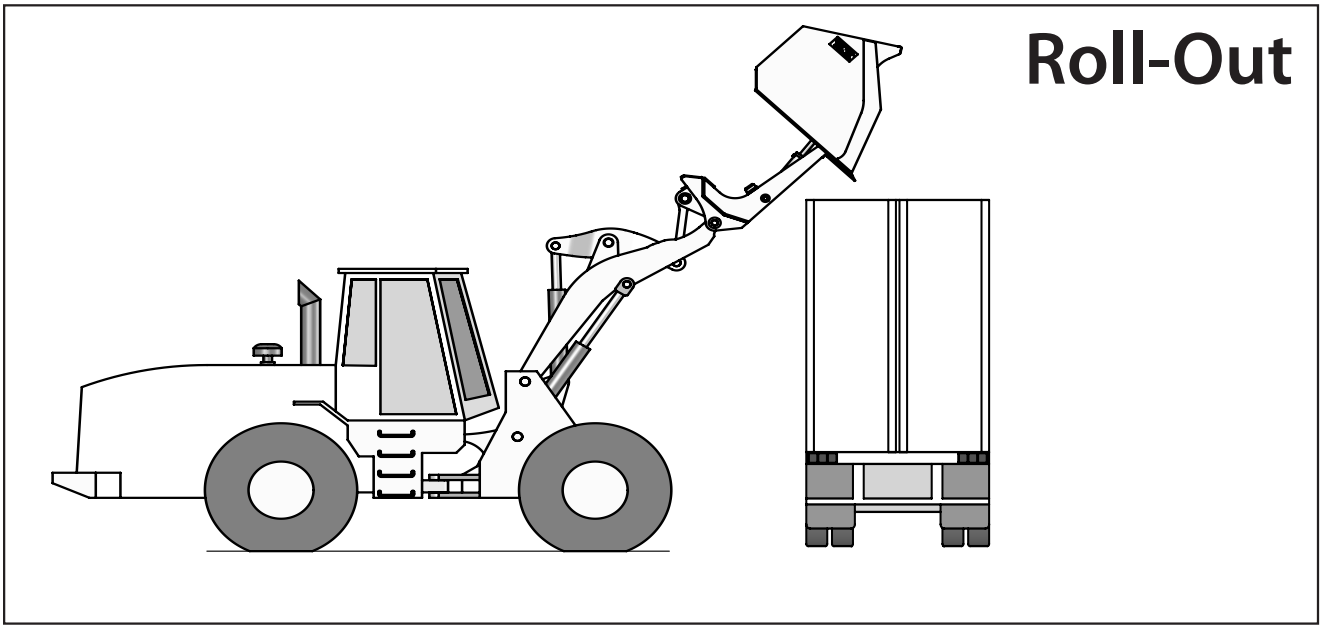

Move loader forward. Roll bucket out to dump load.

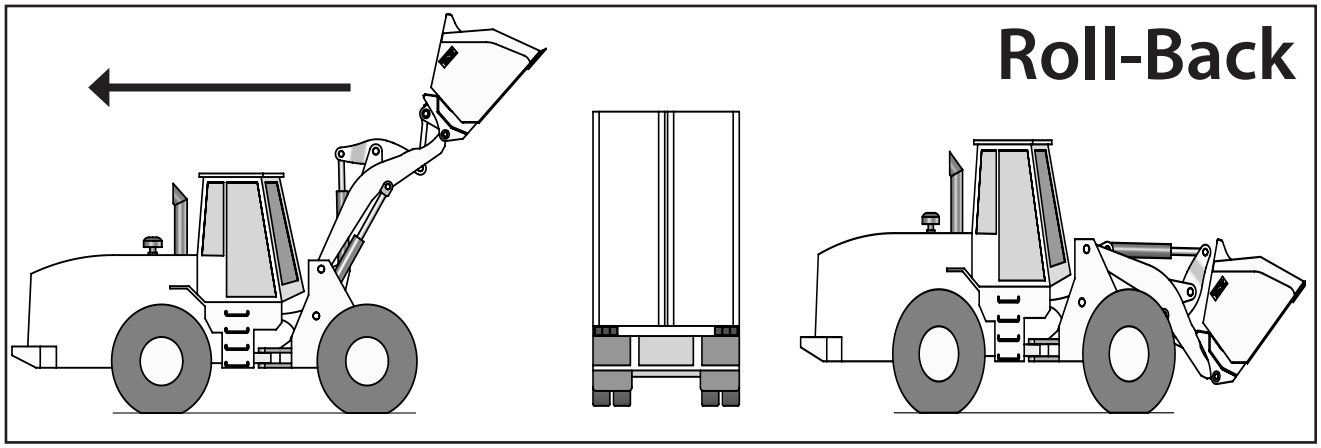

Roll bucket back; move loader away from trailer.

Travel back to pile with bucket in carry position.

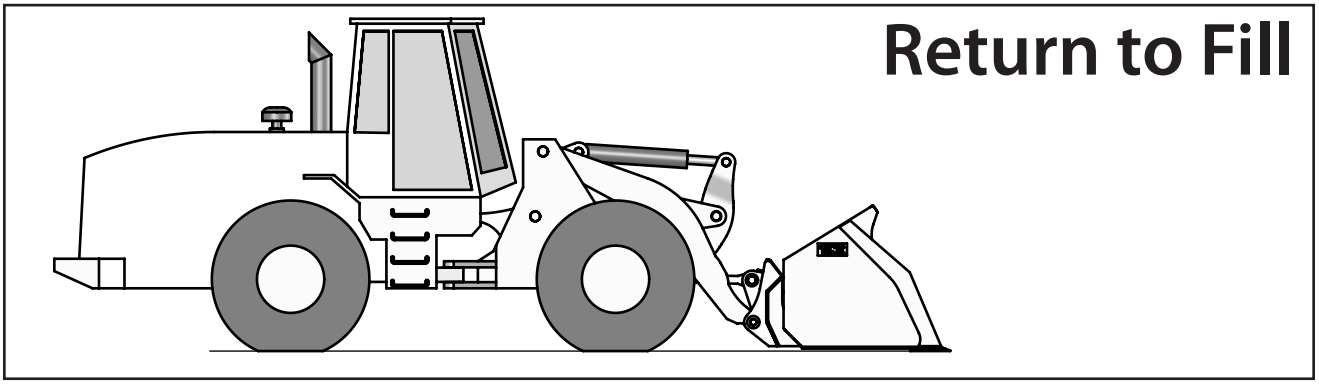

Other Considerations

Creating Stockpiles

Always use the Roll-Out function of your Tink bucket when creating stockpiles. You will have better reach, creating a larger base without driving on top of your product.

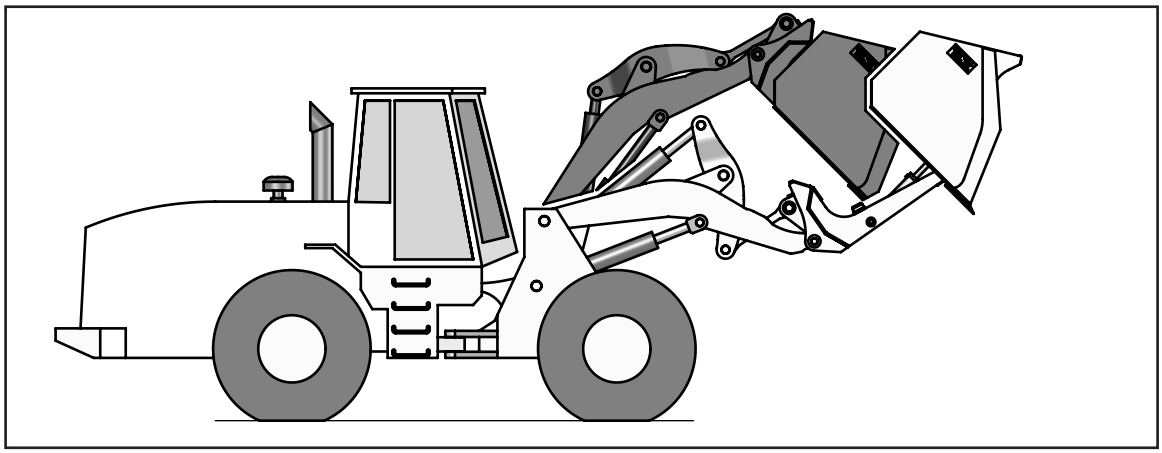

Conventional Dumps

Rolling out your bucket is the most efficient method of dumping. Dumping a heavier bucket conventionally can cause premature wear and possibly damage the loader linkage.

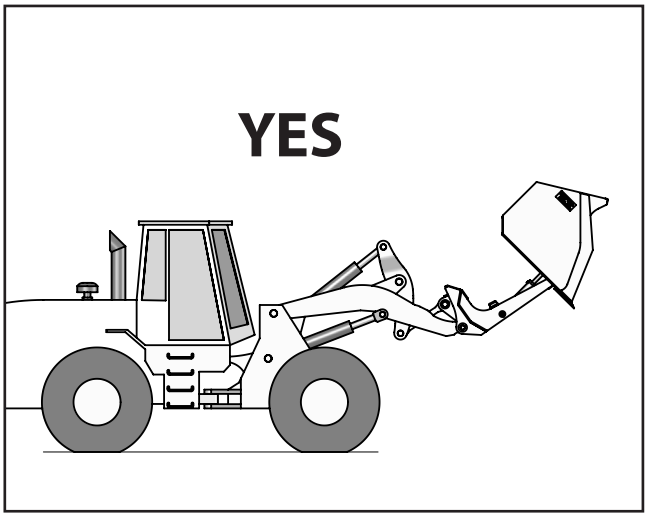

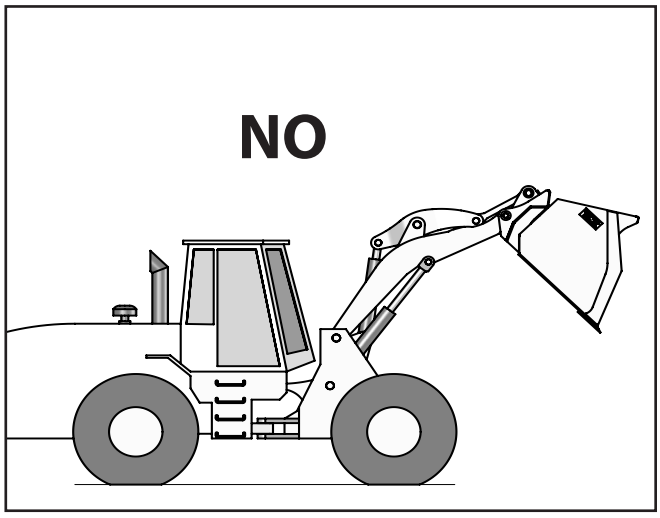

NOTE: Some independent manufacturers have empty attachment weight guidelines. Please contact the OEM representative. Some provide or require bucket dump flow control kits to minimize problems incurred with heavier attachments.

Other Considerations

Floor Pits

Tink Roll-Out Buckets are perfectly suited for floor pits and grain elevators. Product damage is greatly reduced when the operator can use the roll-out function to slowly dump the bucket from a low height. When loading a floor pit, slowly dump the bucket until the edge is 18" from the floor, then use the roll-out function to carefully dump the product into the floor pit. This will prevent your product from falling a great distance.

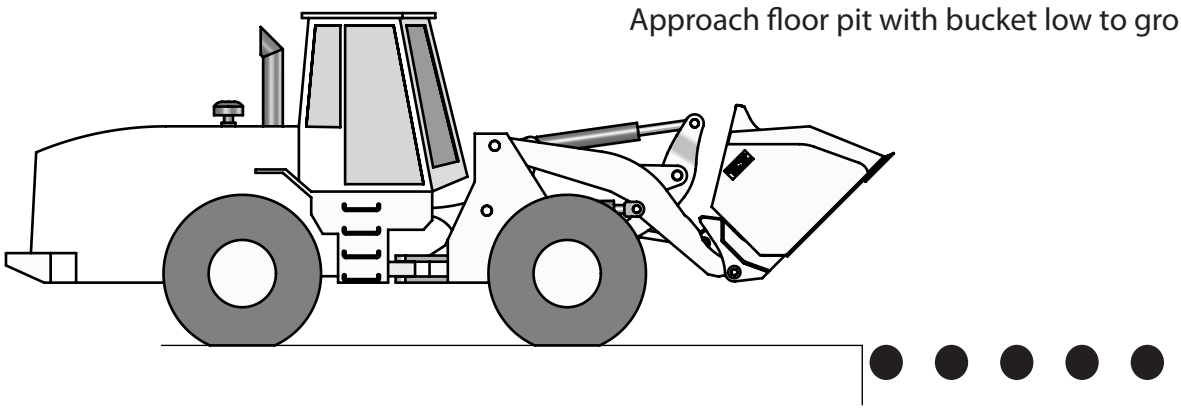

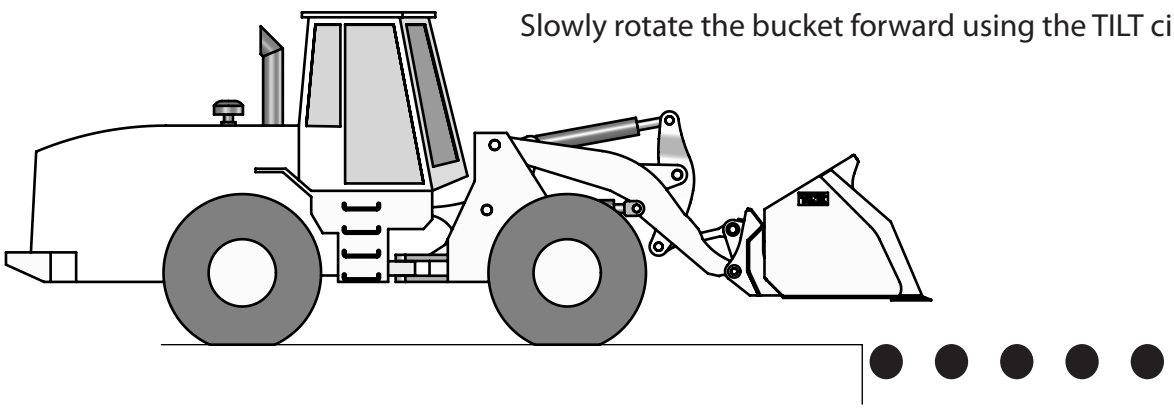

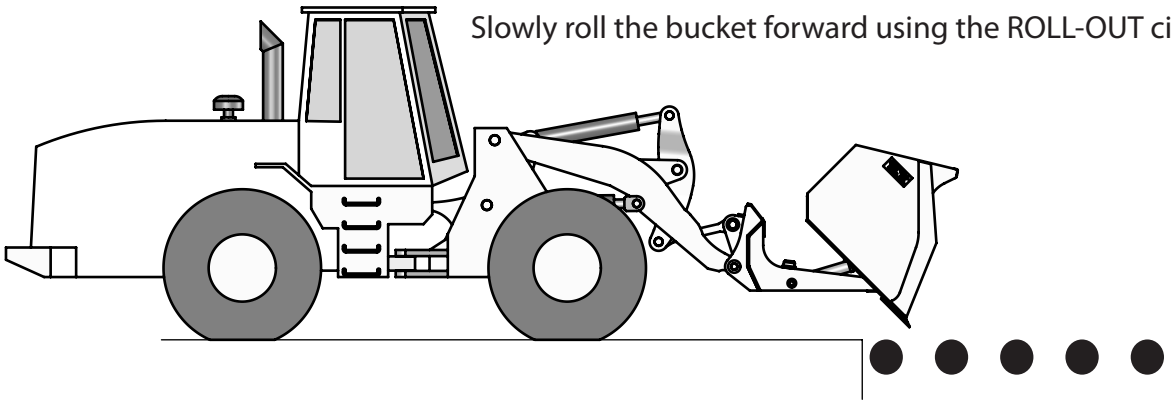

Other Considerations

What Not To Do: Misuse of Bucket

TINK BUCKETS ARE NOT DESIGNED FOR GENERAL USE. DO NOT USE BUCKET FOR ANYTHING OTHER THAN ITS INTENDED PURPOSE.

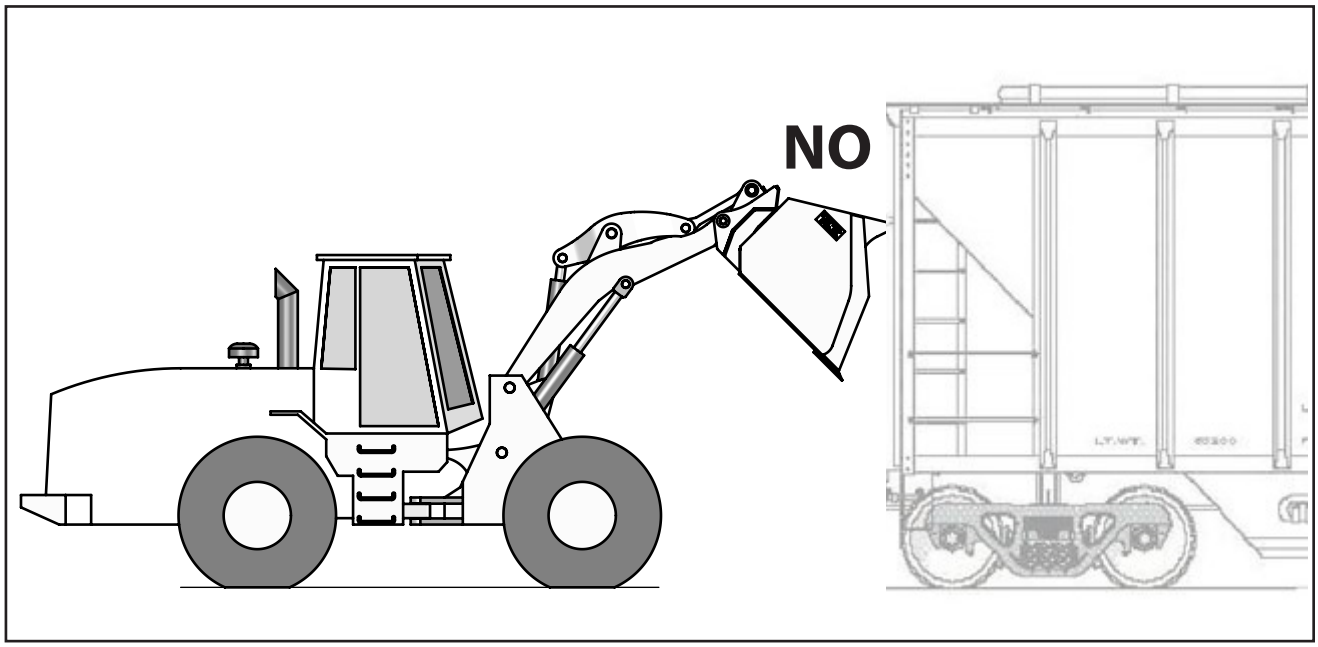

Do not push, pull, lift, or move equiptment with the bucket.

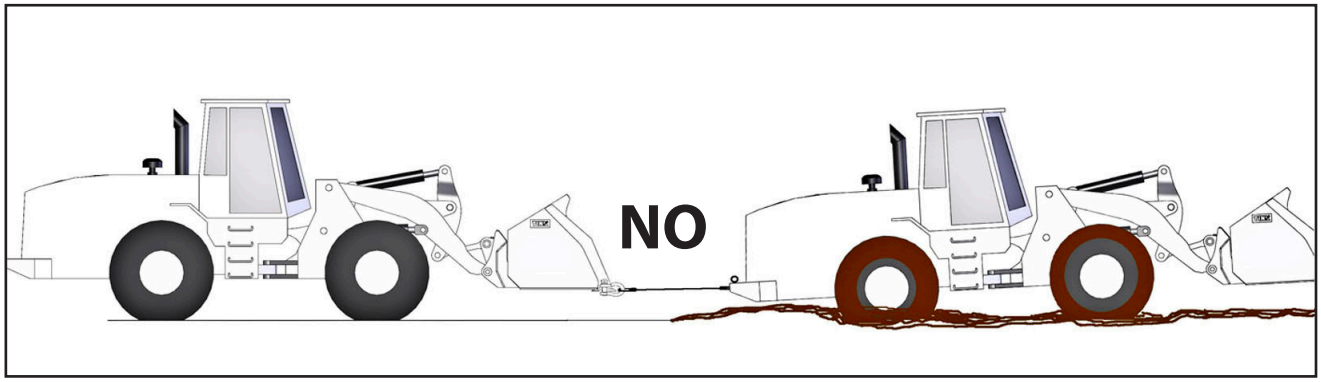

Do not add hooks or cut holes for chains.

NOTE: Use of bucket for anything other than its intended purpose will result in an immediate void of warranty.

Other Considerations

What Not To Do: Bucket Overload

WARNING

Tink Buckets are not designed to support the weight of the loader. Anytime the front wheels of the loader come up off the ground, this can cause damage to the bucket, subframe, coupler, center pull link or loader hydraulics as well as pose a safety risk to the operator.

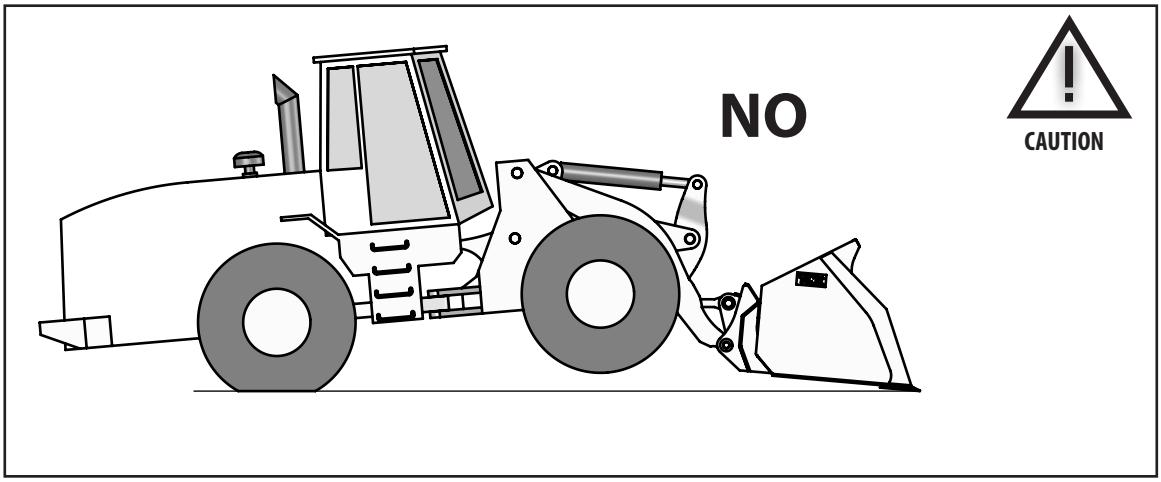

Front wheels are lifted off the ground during floor cleaning.

Attempting to lift material heavier than the bucket/loader combination (rated load, page 12) was intended will cause the rear wheels to lift off the ground. This can cause damage to the bucket, subframe, coupler, center pull link or loader hydraulics as well as pose a safety risk to the operator.

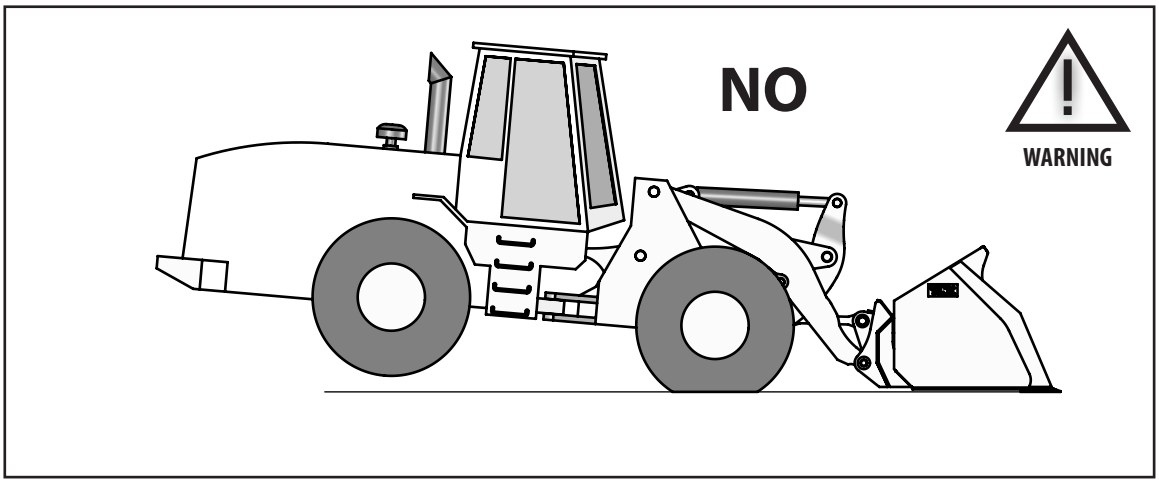

Rear wheels lifted off the ground due to bucket overload.

Other Considerations

What Not To Do: Sticky Material (Subframe)

CAUTION

If sticky material won't dislodge from the bucket, **don't shake the bucket violently or bang it against hard objects to free up the material.** This will cause damage to the subframe.

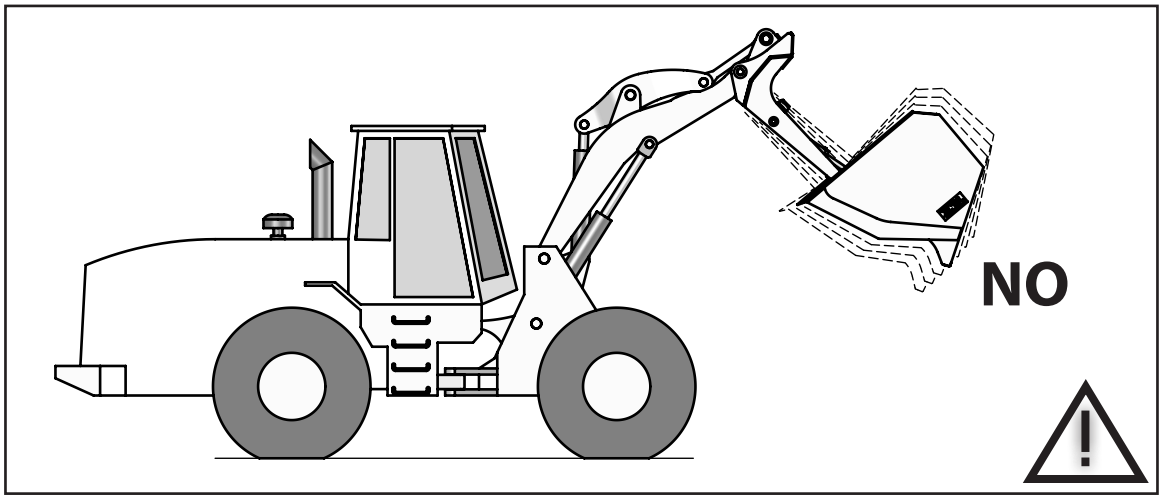

Do not shake bucket to dislodge sticky material.

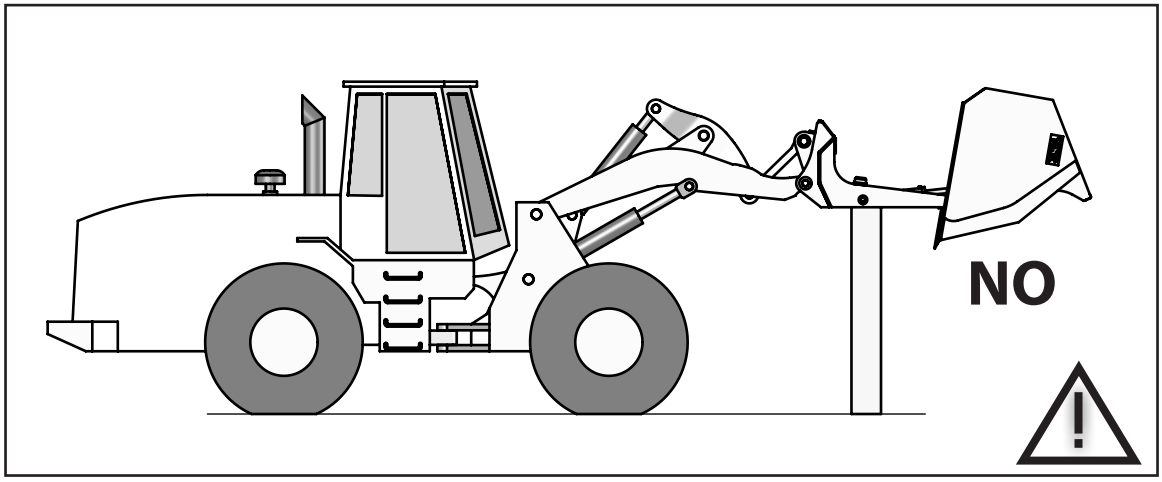

Do not bang bucket or loader arm against objects to dislodge sticky material.

What Not To Do: Sticky Material (Bucket)

CAUTION

Do not bang bucket, top tube, or cutting edge against the ground or hard objects. Doing so may result in bent or broken cylinder rods, pins, and subframes, as well as damage to stops, linkage, and the structure of the bucket.

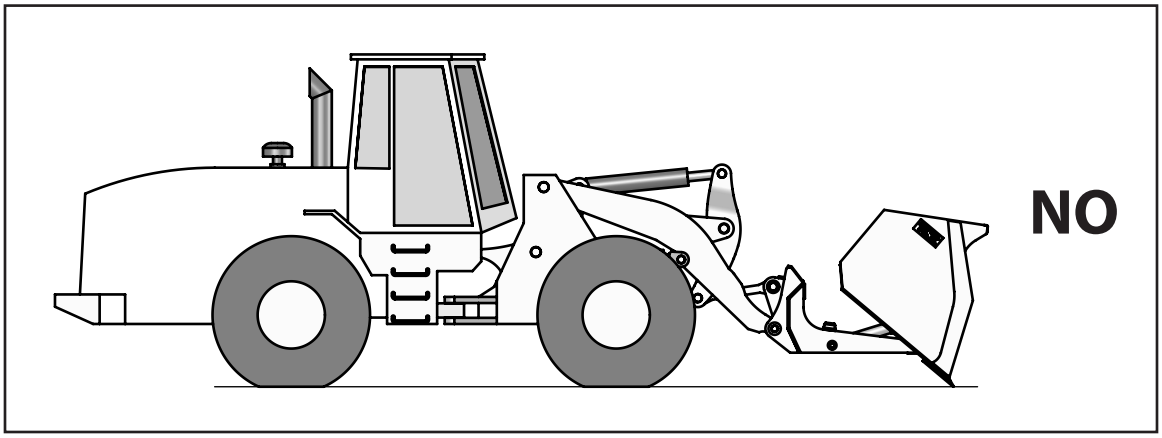

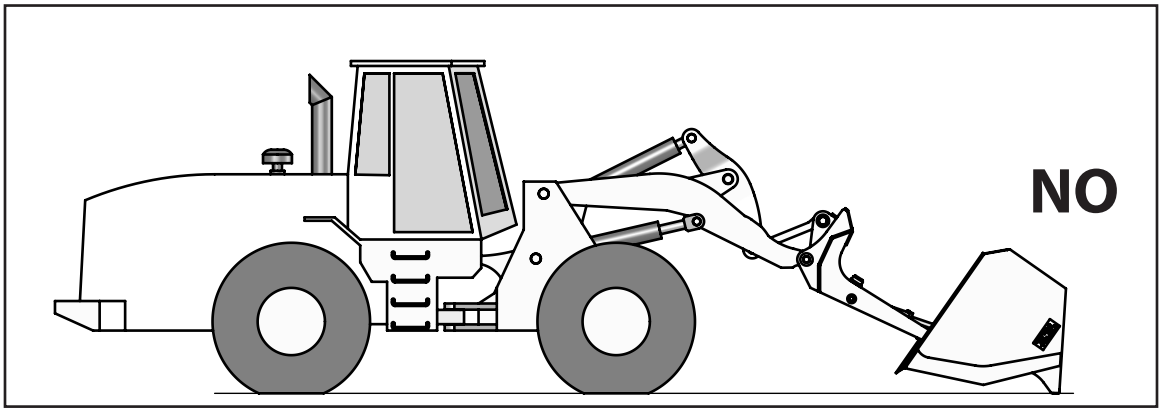

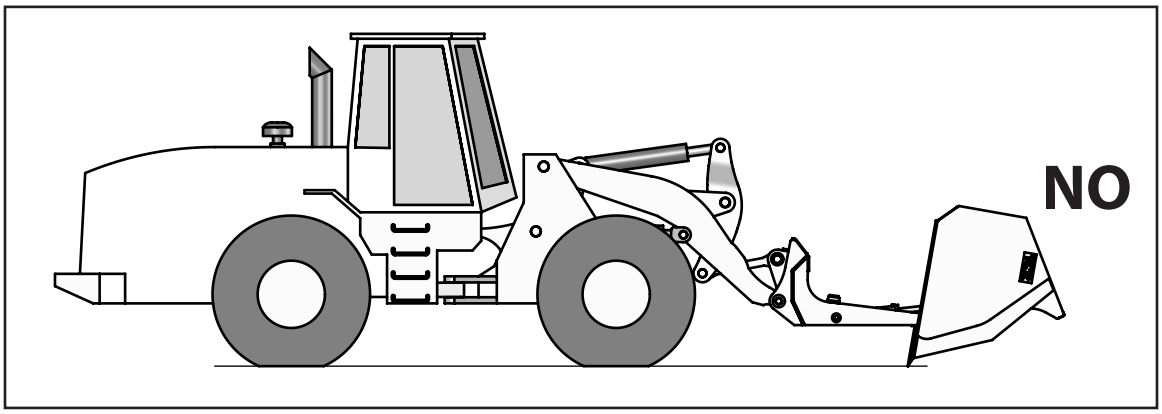

Other Considerations

What Not To Do: Attacking the Pile Sideways

Attacking the pile straight on will ensure longer life of your bucket. Try to avoid attacking the pile sideways or in an arcing fashion. This can cause premature and/or uneven wear on one side and can bow the sidecutter inwards.

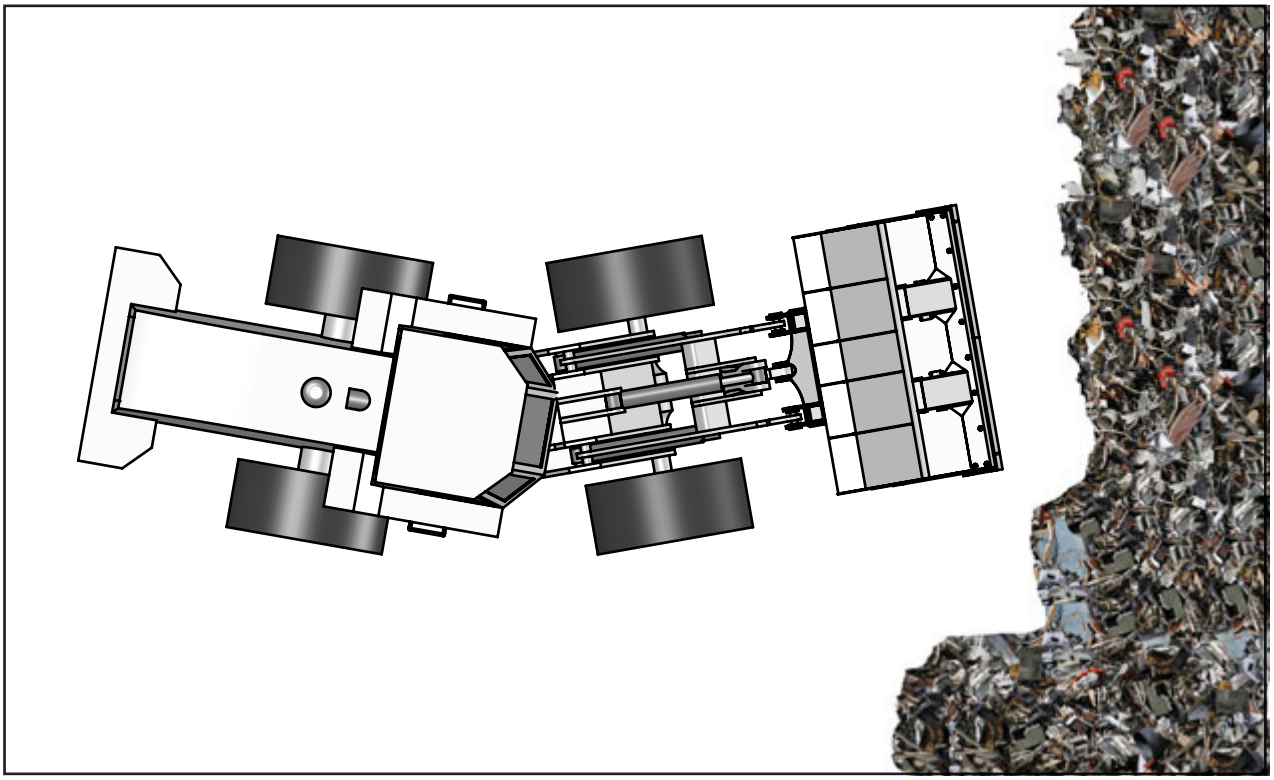

What Not To Do: Proper Bucket Position

CAUTION

In normal operation, only the cutting edges of the bucket should be in contact with the ground, and they should just skim the surface. Once the edge is touching the ground, don't drive it deeper by forcing it down with the loader's weight.

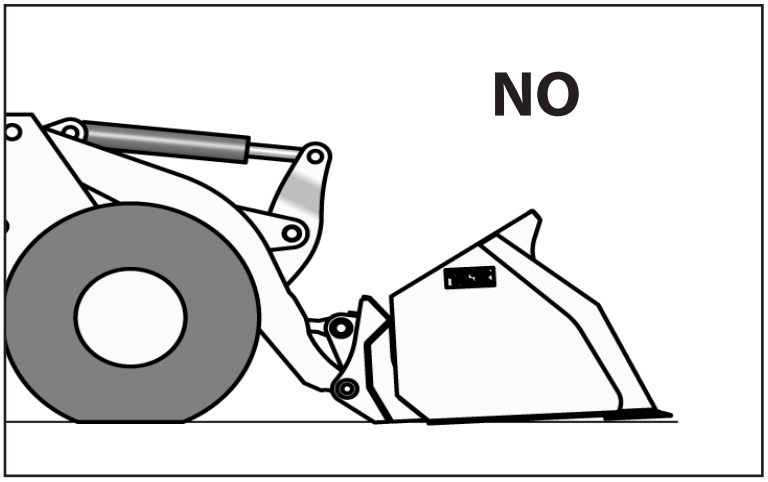

Do not force cutting edge below the surface of the pile.

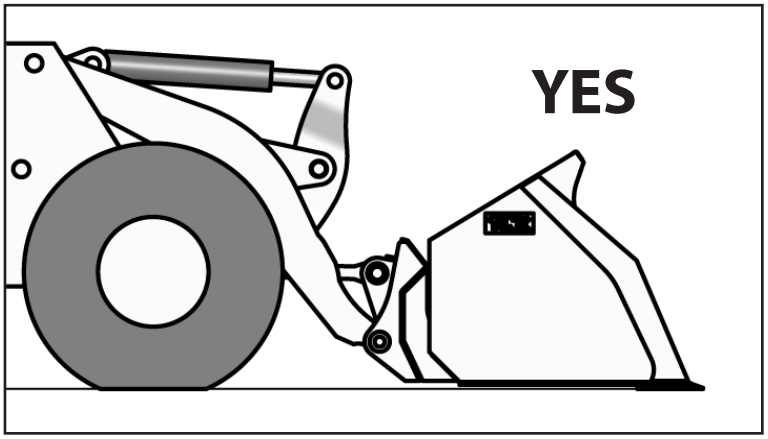

Correct way to use bucket.

Parts

2000 Series Subframe *34-35*
Cylinder.....*36*
Bolt-On Edge System *37*
Bucket Accessories *38*

2000 Series Subframe

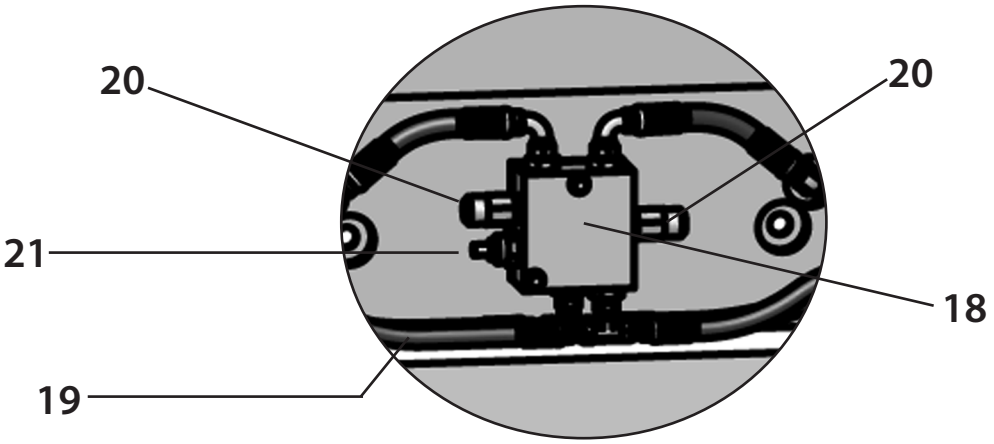

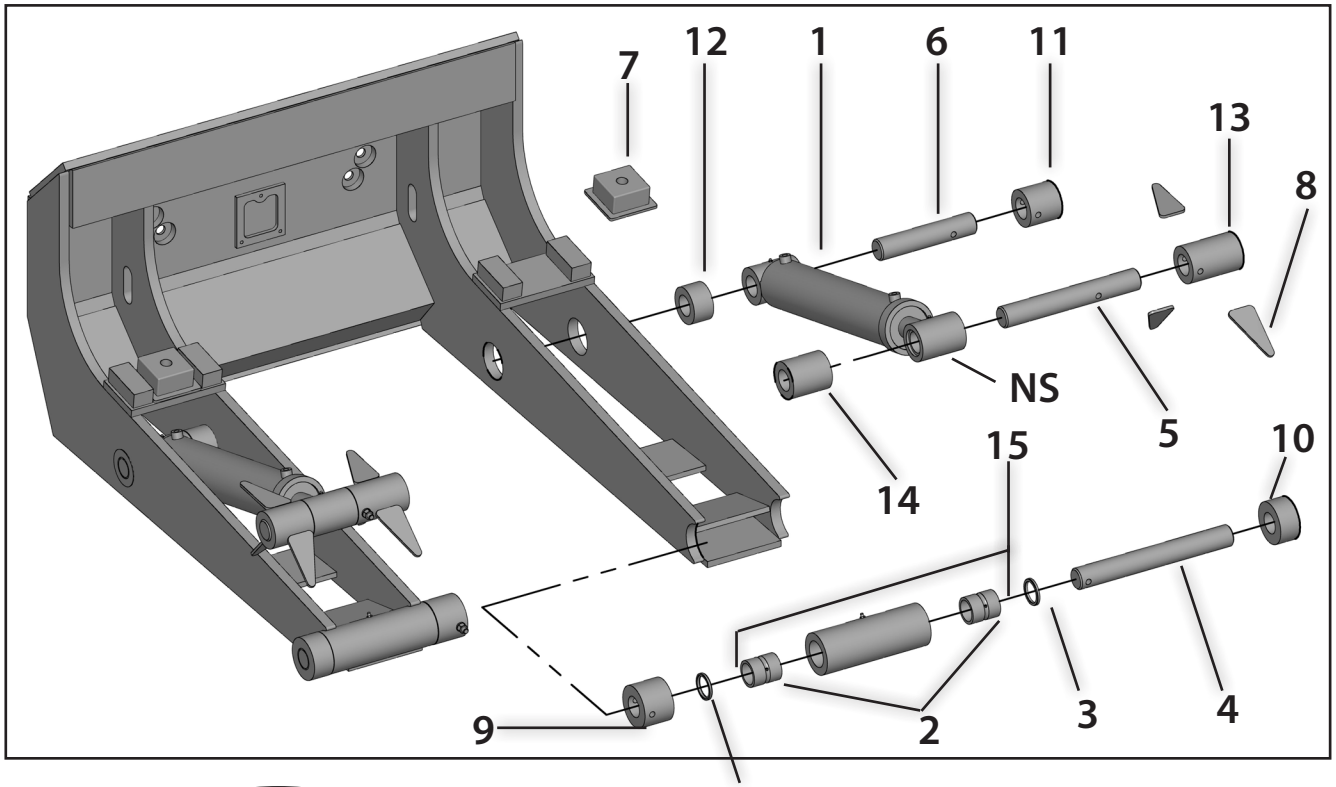

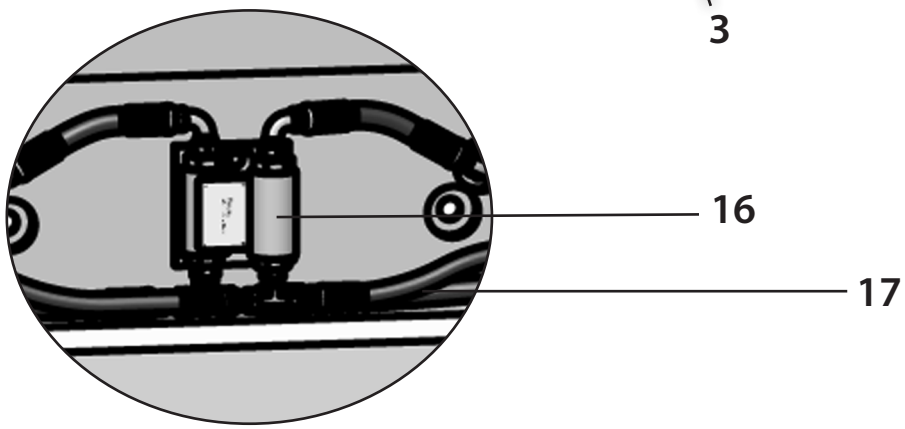

2000 Series Subframe

HYDRAULICS			
Ref. #	Tink Part #	QTY	Description
1	2005700	2	CYL, 3 X 18 TPI
16	601130	1	Valve, speed control 205175
17	2006063	1	Kit, CYL Hose R2000 Speed Control Valve
-OR-			
18	2004021	1	Valve, flow control/relief
19	2006062	1	Hose Kit R2000 STD Valve
20	2003776	2	Cartridge, relief fixed @ 2250 PSI
21	2004022	1	Valve, needle for 2004021

WELDING NOT REQUIRED			
Ref. #	Tink Part #	QTY	Description
2	2002300	4	Bushing, 2.5"od x 2"id x 3"
3	2004011	8	Seal, 2" I.D.
4	803710	2	Pin, drive R2000
5	803720	2	Pin, cyl rod R2000
6	803730	2	Pin, cyl base R2000
NS	2002300	2	Cylinder Rod End Insert

WELDING REQUIRED			
Ref. #	Tink Part #	QTY	Description
7	2004725	2	Pad Rubber Stops CAT
8	801960	12	CYL-Boss Gusset
9	803600	2	Boss, drive long R2000
10	803610	2	Boss, drive short R2000
11	803630	2	Boss, cyl base long R2000
12	803640	2	Boss, cyl base short R2000
13	803650	2	Boss, cyl rod long R2000
14	803660	2	Boss, cyl rod short R2000
15	600800	2	Boss, drive w/insert no seals R2000

NS=Not Shown

Cylinder

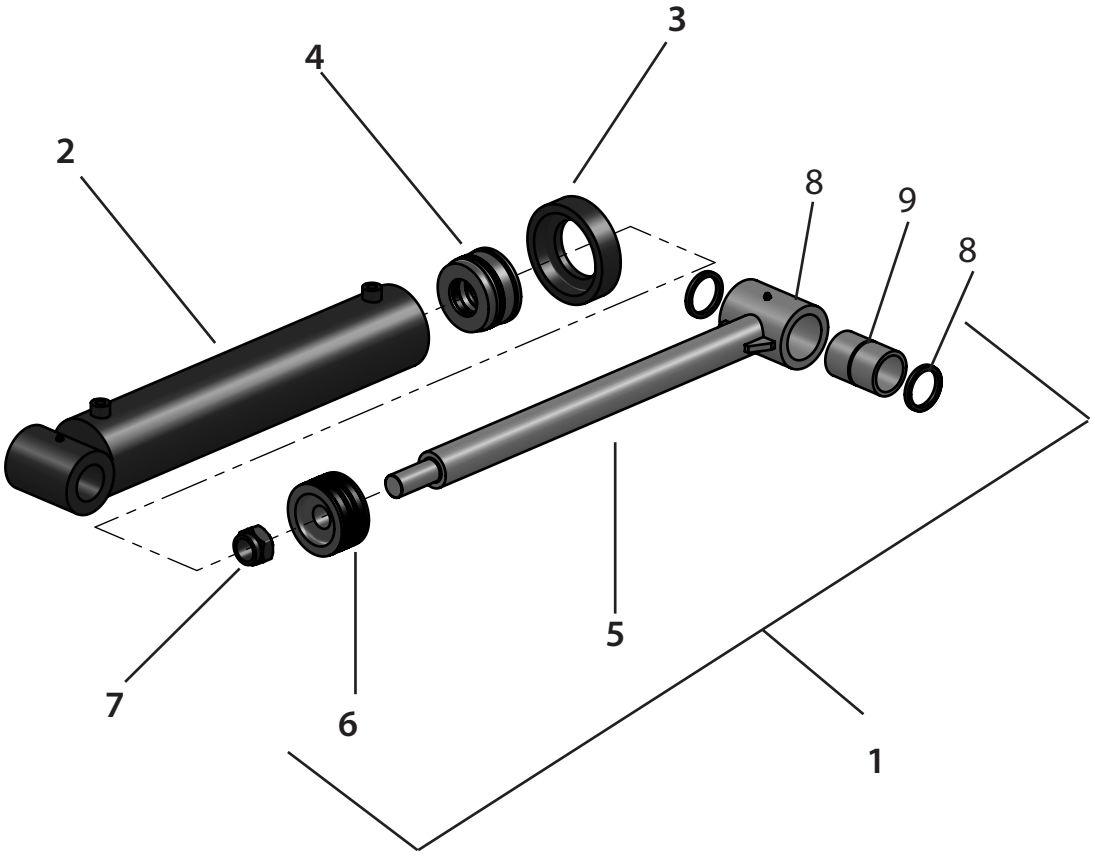

Model Numbers Starting with R2 3"x18"			
Ref. #	Tink Part #	QTY	Description
1	2005700	2	Cyl, 3 x 18 TPI
2	2006098	2	Assy, barrel 3 x 18 TPI
3	2005721	2	Collar, cyl gland 3" TPI
4	2005951	2	Base head 3 x 18 3 x 12
5	2005753	2	Assy, rod 3 x 18 TPI
6	2006095	2	Piston, steel 3 x12 3 x 18
7	2005942	2	Nut, lock 3x
8	2004011	2	Seal, 2" I.D.
9	2002300	2	Bushing, 2.5"od x 2"id x 3"
NS	2004243T	2	Kit, seal SSK301500 C

Bolt-on Edge System

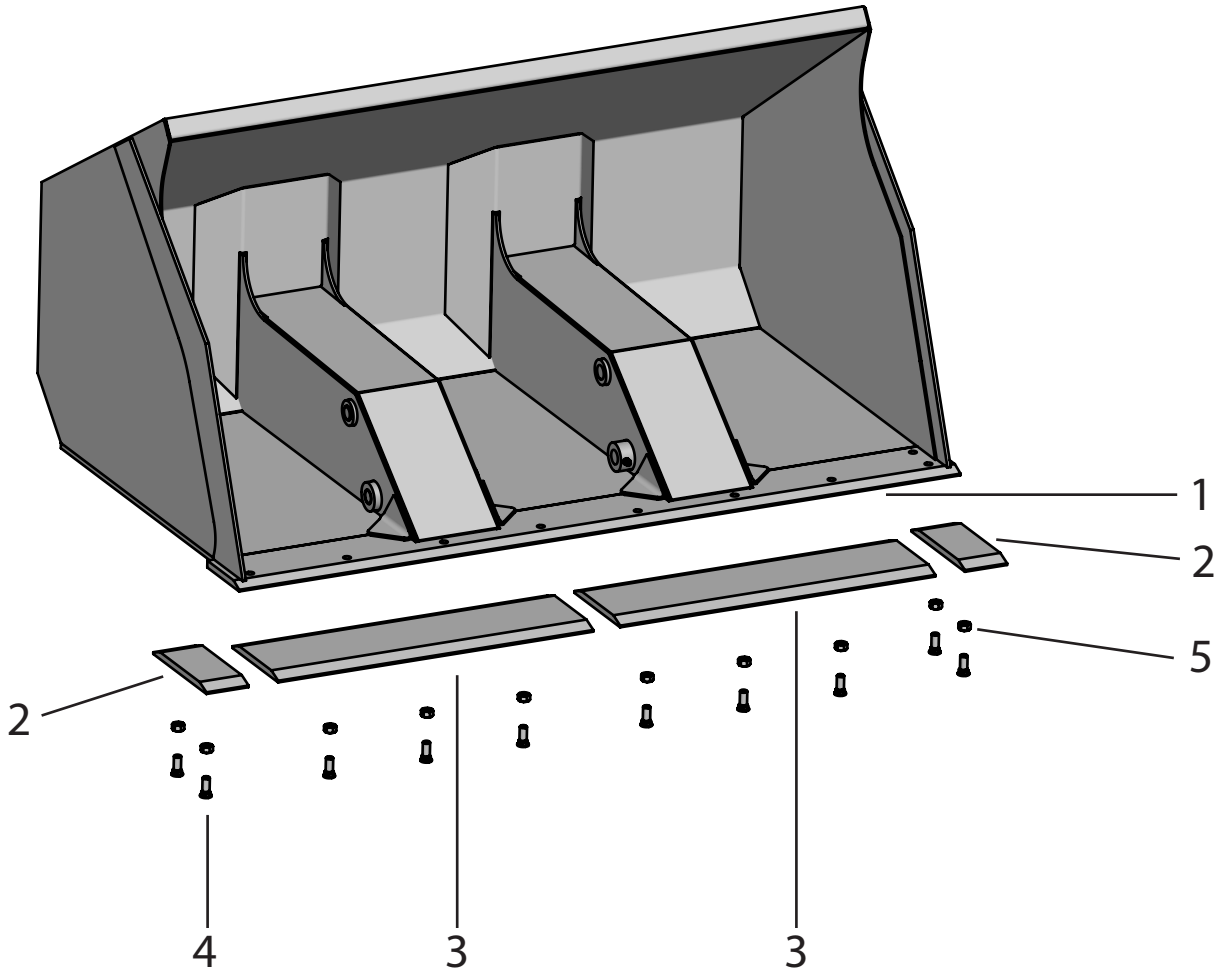

BOLT-ON EDGE SYSTEMS						
Ref. #	96″	100"	105″	115"	109″	Description
1	2005641	2006091	2005645	2006117	2005646	Base Edge
2	2005643	2005643	2005643	2005656	2005656	End Bit
3	2005642	2006092	2005644	2006115	2005648	Center Bit
4	2005661	2005661	2005661	2005661	2005661	Bolt
5	2005664	2005664	2005664	2005664	2005664	Nut

Bucket Accessories

The following accessories require welding and can be added at any time. Please call for more details. For efficient ordering, please have your serial number available.

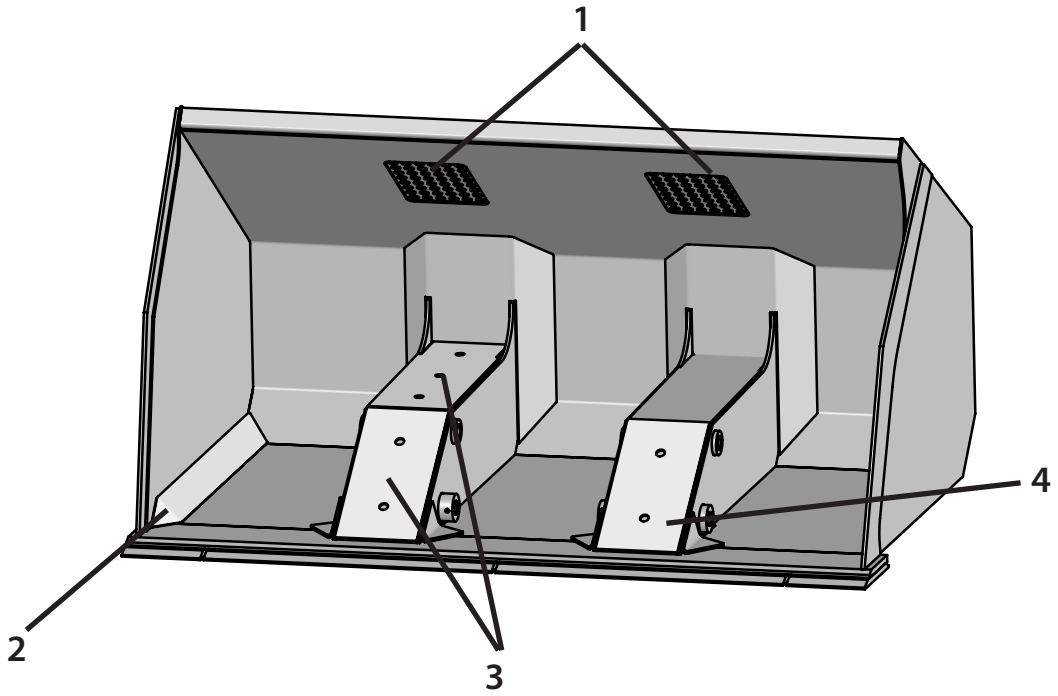

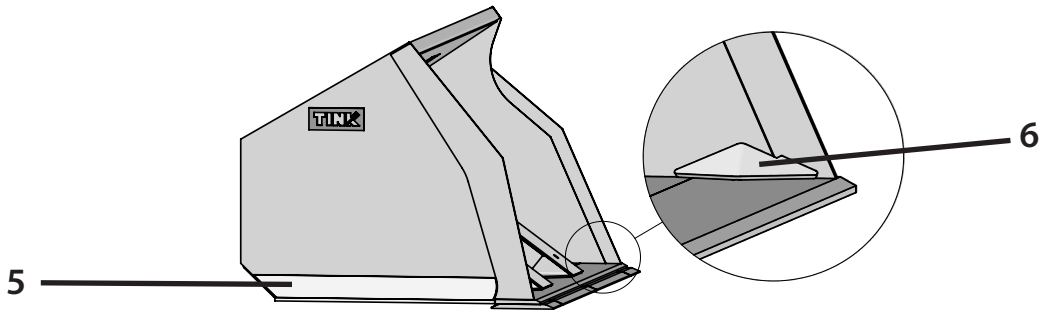

Bucket Accessories					
Ref. #	Description	Model Number			
		R2036	R2040	R2048	R2050
		Tink Part Number			
1	Visability Screen	CALL	CALL	CALL	CALL
2	Side-Floor Gusset	RASFG61	RASFG61	RASFG67	RASFG67
3	Tunnel Cover Set 4 Piece	RA2AR	RA2AR	RA2AR	RA2AR
4	Tunnel Cover Set 2 Piece	RA2ARF	RA2ARF	RA2ARF	RA2ARF
5	Curbside Wear Strip	ROSWS61	ROSWS61	ROSWS67	ROSWS67
6	Base Edge Gusset	RAGUS	RAGUS	RAGUS	RAGUS

Troubleshooting

Bucket Shudders/Squeaks/Whines During Operation			
Flg.	**Condition**	**Possible Causes**	**Remedies**
1	Relief valve obstructed with debris	Jumper hoses not cleaned properly prior to installation	• Buy new relief valve (not covered under warranty) • Clean relief valve: (1) Remove relief valve; (2) disassemble relief valve; (3) remove any debris; (4) clean with solvent; (5) re-install.
		Shards of hose liner stuck inside valve	
		Jumper hose quick connectors dirty from laying on ground	
		Dirt caught in relief valve	
	Pins and bushings are damaged from lack of mainenance	Galling on hardened insert bushings from lack of grease	• Replace pins and hard insert bushings in Drive pivot, Cylinder Rod End and Cylinder Base End. • Clean pins and bushings. Refer to maintenance section of this manual for full maintenance schedule. Grease all pins and bushings every day.
		Damaged pins from lack of grease	

Cylinder Problems/Leaks			
#	**Condition**	**Possible Causes**	**Remedies**
	Damaged cylinder gland	Roll-out stops need repair	• Contact Tink for instructions on measuring cylinder extension and roll-out stop repair. • Clean out material packed under cylinder. Check for packed material more often or daily if necessary.
		Cylinder extends beyond design, damaging end caps and/or cylinder gland.	
	Bent cylinder rod	Roll-out stops need repair.	• Contact Tink for instructions on measuring cylinder extension and roll-out stop repair. • Clean out material packed under cylinder. Check for packed material more often or daily if necessary.
		Debris packed between cylinder and subframe causing cylinder to bend.	

Troubleshooting

Bucket Will Not Roll Out			
Flg.	**Condition**	**Possible Causes**	**Remedies**
	Insufficient flow or pressure	Loader circuit does not supply the minimum requirements. Tink buckets require 19 gallons per minute and a minimum of 2,000 psi to operate.	Check with loader manufacturer to make sure that you are using a circuit that will supply the minimum requirements. (Note: Do not tap into the locking pin hydraulic circuit on loaders with quick couplers, this circuit will not provide enough pressure and flow to operate a Tink bucket.)
	Relief valve obstructed with debris	Jumper hoses not cleaned properly	• Buy new relief valve (not covered under warranty) • Clean relief valve: (1) Remove relief valve; (2) disassemble relief valve; (3) remove any debris; (4) clean with solvent; (5) re-install.
		Shards of hose liner stuck inside valve	
		Jumper hose quick connectors dirty from laying on ground	
		Dirt caught in relief valve	
	Flow control obstructed with debris	Jumper hoses not cleaned properly	(1) Remove needle valve flow control; (2) open adjuster to full open; (3) clean with solvent.
		Shards of hose liner stuck inside valve	
		Jumper hose quick connector dirty from laying on ground	
		Dirt caught in needle valve	
	Flow control not adjusted properly	Needle valve is closed.	Re-install and adjust flow control for roll-out to 3.5 seconds.
	Insufficient oil in loader hydraulic system.	Low oil or presence of foam in hydraulic tank.	Fill hydraulic reservoir to suggested manufacturer capacity.