Accessories / Parts

- Trays
- Scope Protectors
- Scope Holders
- Connecting Cables
- Light Cables
- Cleaning Accessories
- Replacement Parts

Anodized Aluminum Trays

for Pre-Vac Autoclave, EtO and STERRAD Sterilization

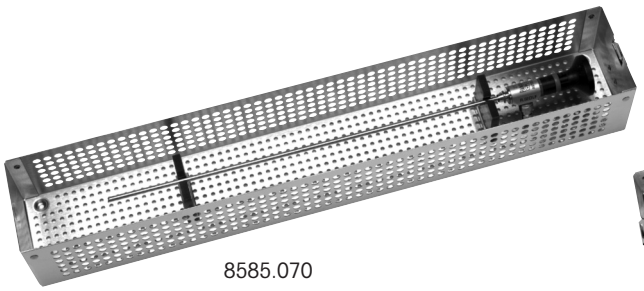

8585.070

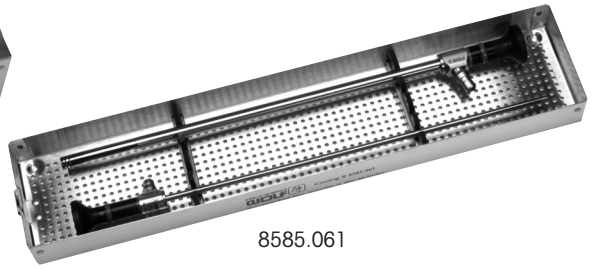

8585.061

		Inner Dimensions			Outer Dimensions			
	Suitable for:	Length (in)	Width (in)	Total Height (in)	Length (in)	Width (in)	Total Height (in)	Type
Single scope tray with brackets	5 mm – 10 mm rigid endoscopes	17.9	2.9	2.5	18.2	3.1	2.6	8585.070
Dual scope tray with universal brackets	5 mm – 10 mm rigid endoscopes	17.2	3.6	1.3	17.4	3.8	1.5	8585.061

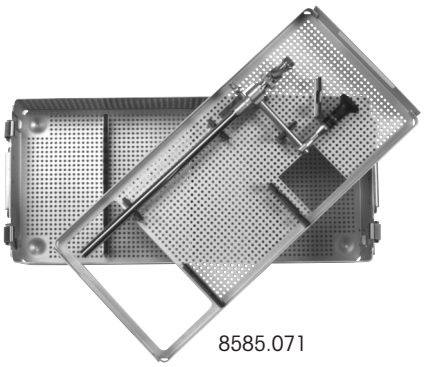

8585.071

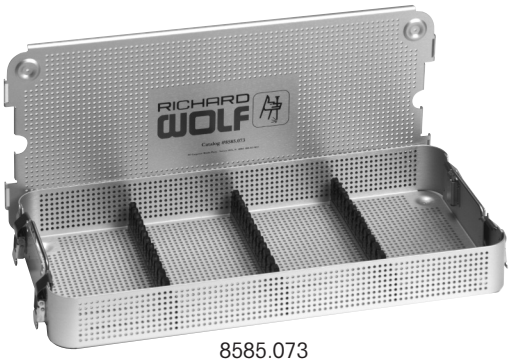

8585.073

		Inner Dimensions			Outer Dimensions			
	Suitable for:	Length (in)	Width (in)	Total Height (in)	Length (in)	Width (in)	Total Height (in)	Type
Universal Scope Tray, 2 tiers with brackets	Top tier holds operating laparoscope, bottom tier holds multiple endoscopes	18.7	8.5	3.5	19.9	8.9	3.9	8585.071
Universal Tray with 3 brackets	Endoscopes, forceps and accessories	20.6	9.7	2.4	21.9	10.2	2.8	8585.073

Anodized Aluminum Trays

for Pre-Vac Autoclave, EtO and STERRAD Sterilization

Reprocessing

8585.011

8585.021

		Inner Dimensions			Outer Dimensions			
	Suitable for:	Length (in)	Width (in)	Total Height (in)	Length (in)	Width (in)	Total Height (in)	Type
Laparoscopy Tray with instrument rack, 8585.211	Holds 12 Eragon forceps and endoscopes securely	21.6	10.7	7.7	22.8	11.1	8	8585.011
Laparoscopy Tray with instrument rack, 8585.221	Holds 12 Eragon forceps and endoscopes securely	25.6	10.7	7.7	26.8	11.1	8	8585.021

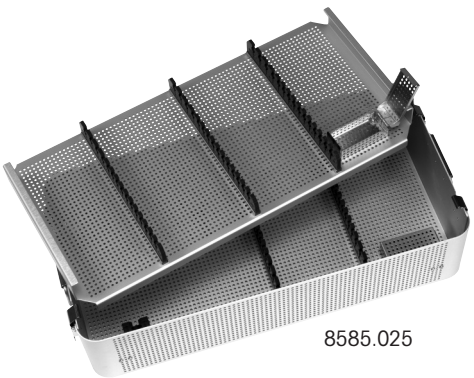

8585.025

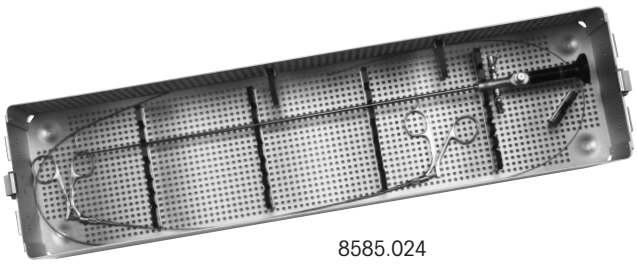

8585.024

		Inner Dimensions			Outer Dimensions			
	Suitable for:	Length (in)	Width (in)	Total Height (in)	Length (in)	Width (in)	Total Height (in)	Type
Universal Tray, 2 tier with universal brackets	Endoscopes and instruments	21.6	10.7	3.4	22.8	11.1	5.3	8585.025
Universal Tray	Compact hysteroscope, Egg Scope and accessories	24	6	4.2	25.2	6.4	4.4	8585.024

Anodized Aluminum Trays

for Pre-Vac Autoclave, EtO and STERRAD Sterilization

8585.027

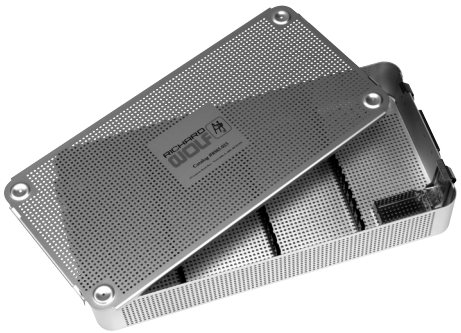

8585.023

		Inner Dimensions			Outer Dimensions			
	Suitable for:	Length (in)	Width (in)	Total Height (in)	Length (in)	Width (in)	Total Height (in)	Type
Universal Tray with 3 universal brackets (not shown)	Longer instruments and endoscopes	25.6	10.7	3.4	26.8	11.1	3.8	8585.027
Universal Tray, with 3 brackets	Resectoscope sets	21.6	10.7	3.4	22.8	11.1	3.8	8585.023

8585.101

8585.091M

		Inner Dimensions			Outer Dimensions			
	Suitable for:	Length (in)	Width (in)	Total Height (in)	Length (in)	Width (in)	Total Height (in)	Type
Camera Head Tray	Camera Head and cord	8.7	8.5	2.5	9.9	8.9	2.9	8585.101
Fascial Closure Tray w/ pin matting	Fascial Closure set	10.6	4.8	1.3	10.9	5.1	1.5	8585.091M

Plastic Trays

for Pre-Vac Autoclave, EtO and STERRAD Sterilization

8570.012

8570.017

		Inner Dimensions			Outer Dimensions			
	Suitable for:	Length (in)	Width (in)	Total Height (in)	Length (in)	Width (in)	Total Height (in)	Type
Single scope tray with brackets	1.9 mm – 5 mm short rigid endoscopes	11.1	3	1.3	12	3.2	1.6	8570.012
Single scope tray with brackets	5 mm – 10 mm long rigid endoscopes	16.1	3	1.3	17	3.2	1.6	8570.017

8570.005

8570.010

		Inner Dimensions			Outer Dimensions			
	Suitable for:	Length (in)	Width (in)	Total Height (in)	Length (in)	Width (in)	Total Height (in)	Type
Dual scope tray	Holds two 4 mm rigid Cysto, Hystero scopes, or 5mm endoscopes	16.1	3	1.3	17	3.2	1.6	8570.005
Dual scope tray	Holds two 10 mm rigid endoscopes	16.1	3	1.3	17	3.2	1.6	8570.010

Plastic Trays

for Pre-Vac Autoclave, EtO and STERRAD Sterilization

8570.027

8570.040

		Inner Dimensions			Outer Dimensions			
	Suitable for:	Length (in)	Width (in)	Total Height (in)	Length (in)	Width (in)	Total Height (in)	Type
Hysteroscopy tray, laser etched	2.7 mm hysteroscopy set	19.5	8.7	1.7	19.8	9.0	1.8	8570.027
Hysteroscopy tray, laser etched	Compact hysteroscopy set	19.5	8.7	2.8	19.8	9.0	3.0	8570.040

8570.011

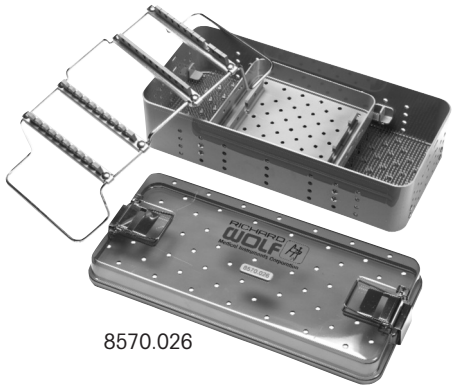

8570.026

		Inner Dimensions			Outer Dimensions			
	Suitable for:	Length (in)	Width (in)	Total Height (in)	Length (in)	Width (in)	Total Height (in)	Type
Instrument tray, 2 tiers	Holds forceps in top layer, endoscopes and other instrumentation in bottom layer	20	9.2	4.6	20.3	9.5	4.8	8570.011
Instrument tray	Holds 4 standard scopes, pin matting on the bottom layer for other instrumentation	20	9.2	4.6	20.3	9.5	4.8	8570.026

Plastic Trays

for Pre-Vac Autoclave, EtO and STERRAD Sterilization

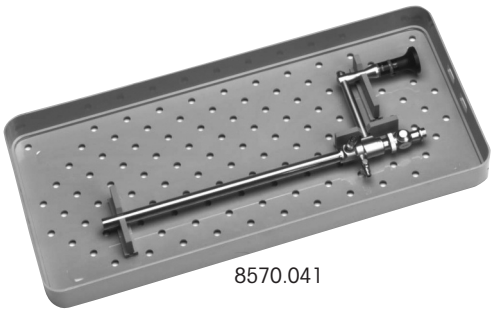

8570.041

8570.101

		Inner Dimensions			Outer Dimensions			
	Suitable for:	Length (in)	Width (in)	Total Height (in)	Length (in)	Width (in)	Total Height (in)	Type
Operating scope tray	Right angle operating laparoscope	19.5	8.7	1.7	19.8	9	1.8	8570.041
Universal tray	Camera head and cord	8.7	9.5	1.7	9	9.7	1.8	8570.101

Laparoscope Warmer 2320

- Electronic temperature control by multi cycle controller
- Four endoscopes can be pre-heated to approx. 122° F simultaneously
- Short warming cycle of approx. 10 minutes
- Hinged feet allow unit to be tilted for easier access when inserting or removing endoscopes
- For Laparoscopes up to 310 mm working length

Laparoscope warmer 2320
including 4 autoclavable tube inserts
with screw caps for four laparoscopes of up to
310 mm working length 2320.002

The Laparoscope warmer is used to warm laparoscopes to prevent them from fogging when introduced into the body (e.g. in laparoscopic surgery).

Spare tube insert for endoscopes of up to 310 mm
working length 8033.90

Anti-fogging solution, sterile 102.01

Scope Protectors

8570.9205/.9325

Protective Sleeves for Scopes
custom molded sleeves for storage
and sterilization of endoscopes, semi-reusable,
for scopes up to 5 mm outer diameter and
up to 20 cm WL, 5 / pack 8570.9205

for scopes up to 5 mm outer diameter and
up to 32 cm WL, 5 / pack 8570.9325

Scope / Instrument Holder

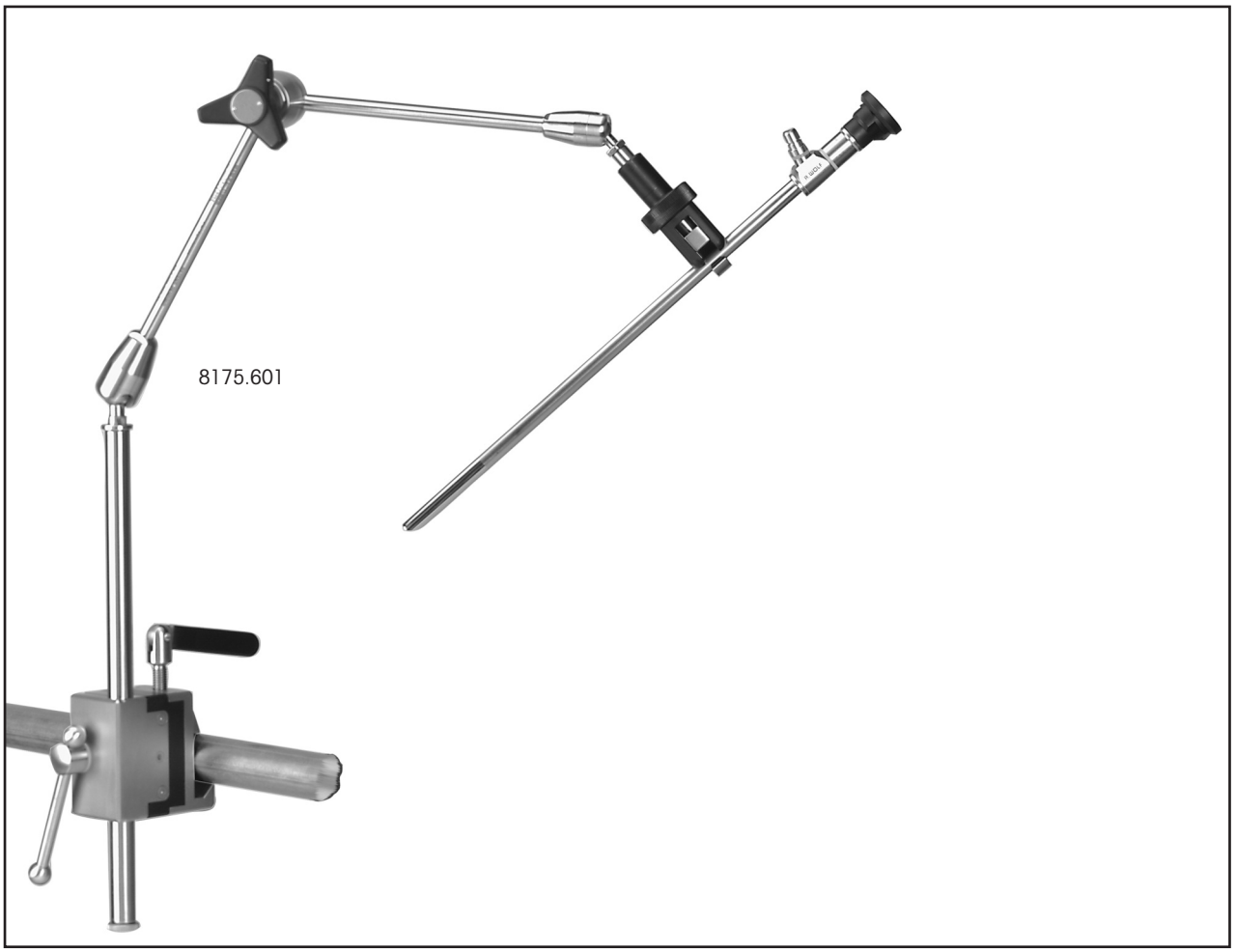

Articulating scope / instrument holder,*
stabilizes laparoscopes, trocar sleeves and liver
retractors to maintain their position 8175.601

*for use with instruments and scopes from 5 mm - 12 mm in diameter

ENDOmotion System

Mechanical Support Arm

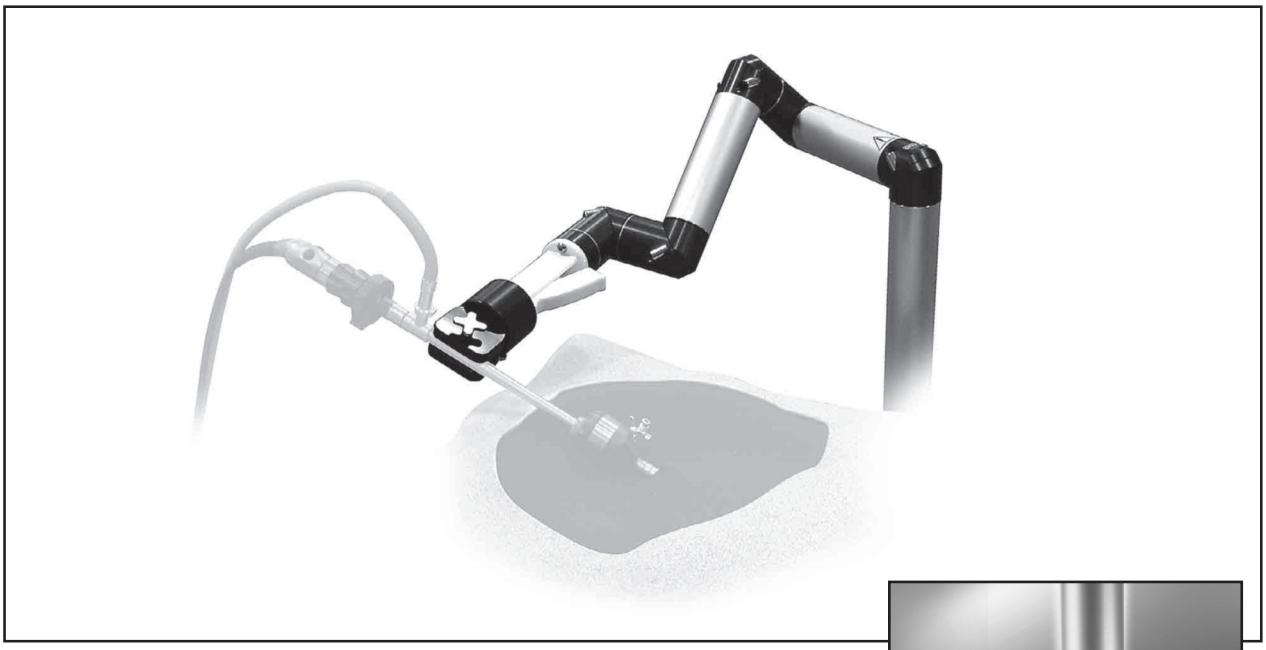

Support arm with mounting clamp on rail.

ENDOmotion System
Universal support arm for laparoscopy
consisting of:
ENDOmotion arm (37500.002), mechanical arm with six 360° rotatable articulated joints which can be released and moved by pressing the handle. Releasing the handle creates a locking of the joints:
Flying range: 640 mm, action distance: 604.5 mm, weight: 6 kg,
Autoclavable endoscope mounting (83750.001) for secure fixation of laparoscopic telescopes and auxiliary instruments,
clamp for fixation (37500.005) on
OR-table-standard fitting,
case (37500.010) 37500.001

Sterile drapes for support arm
7″ x 96″, individually packaged, box/50 .....5510.891

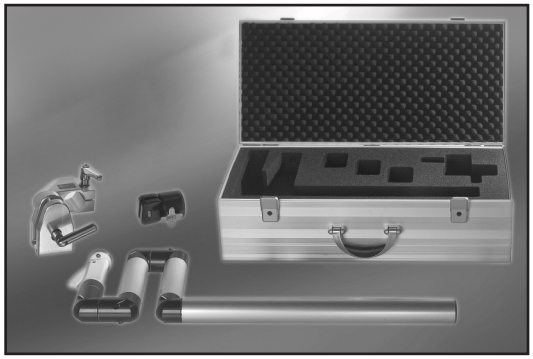

Storage case 375000.010.

HF Bipolar Connecting Cables

Instrument connecting	Unit connecting	Length	Part Number
WOLF Bipolar forceps	WOLF / Martin / Berchtold / Aesculap	3 M	**8108.031**
		5 M	**8108.051**
	Valleylab (2 pin with 28.5 mm spacing)	3 M	**8108.033**
		5 M	**8108.053**
	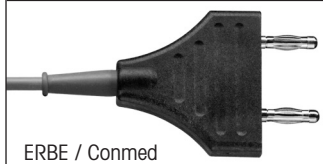 ERBE / Conmed (2 pin with 22 mm spacing)	3 M	**8108.035**
		5 M	**8108.055**
	ERBE / ACC / ICC / T (1 pin)	3 M	**8108.032**
	WOLF Disposable, box of 10	3 M	**8108.011**
Bipolar Tweezers connecting	Valleylab (2 pin with 28.5 spacing)	3 M	**8108.133**
		5 M	**8108.153**
	WOLF / Martin / Berchtold / Aesculap	3 M	**8108.131**
		5 M	**8108.151**
	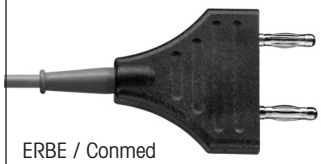 ERBE / Conmed (2 pin with 22 mm spacing)	3 M	**8108.135**
		5 M	**8108.155**

HF Monopolar Connecting Cables

Instrument connecting	Unit connecting	Length	Part Number
WOLF - Resectoscopes 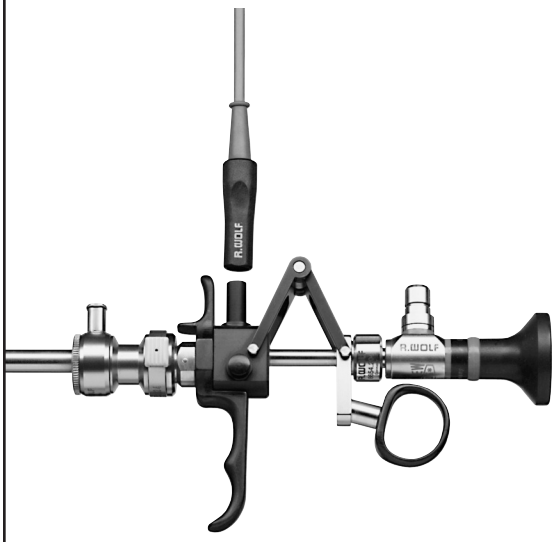	ERBE T-Series / Wolf	3 M	**815.132**
	Bovie / Valleylab / Erbe Int.	3 M	**815.033**
			415.0030*
		5 M	**815.053**
WOLF - Instrument	ERBE T-Series / Wolf	3 M	**8106.132**
			4106.1320*
	Bovie / Valleylab / Erbe Int.	3 M	**8106.033**
			4106.0330
		5 M	**8106.053**

***Disposable cables, individually packed sterile, 10 / box.**

Adapter for HF Cable 8106 to 815 ..... 8106.815

Adapters

Video

For connecting Richard Wolf light cables to light sources and endoscopes of other manufacturers

	Light Source Adapters	Endoscope Adapters
Richard Wolf	screw on *8095.07	screw on 8095.05* Snap-on 8095.06
ACMI / Gyrus	8083.10	8081.00 *both needed* 8081.01
Storz	unscrew Richard Wolf cables fit without adapter	8091.00
Olympus	screw on 8096.811	8091.00
Stryker / Dyonics	8094.00	
Fuji	screw on 8096.85	
Machida	screw on 8097.11	

* For 8063.353 high temperature light cables use 8096.631

**For 1.6mm endoscopes use 15004.013

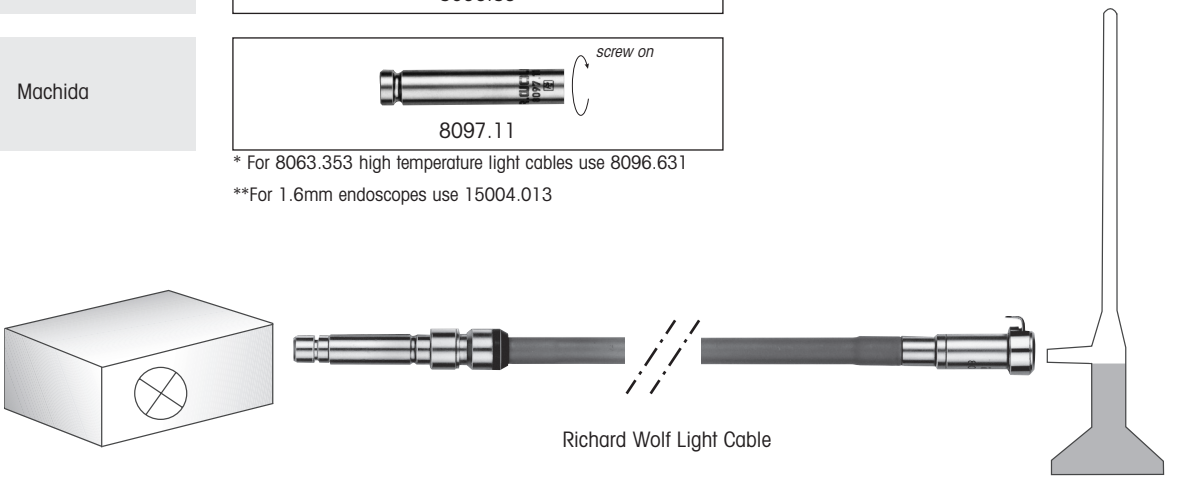

Adapters

For connecting Richard Wolf endoscopes to light cables of other manufacturers

Video

Richard Wolf	screw on 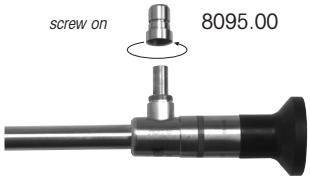 8095.00
ACMI / Gyrus	*8087.00
Storz	8088.00
Olympus-Standard	8088.80
Olympus-WAO3...A	8088.81

*8087.00 fits: AFI, Aspen, Concept, Cuda, Dyonics, Eder, KLI, Linvatec, Lutex, Pilling, Stryker, V. Mueller, Wehmer, Weck, Zeiss

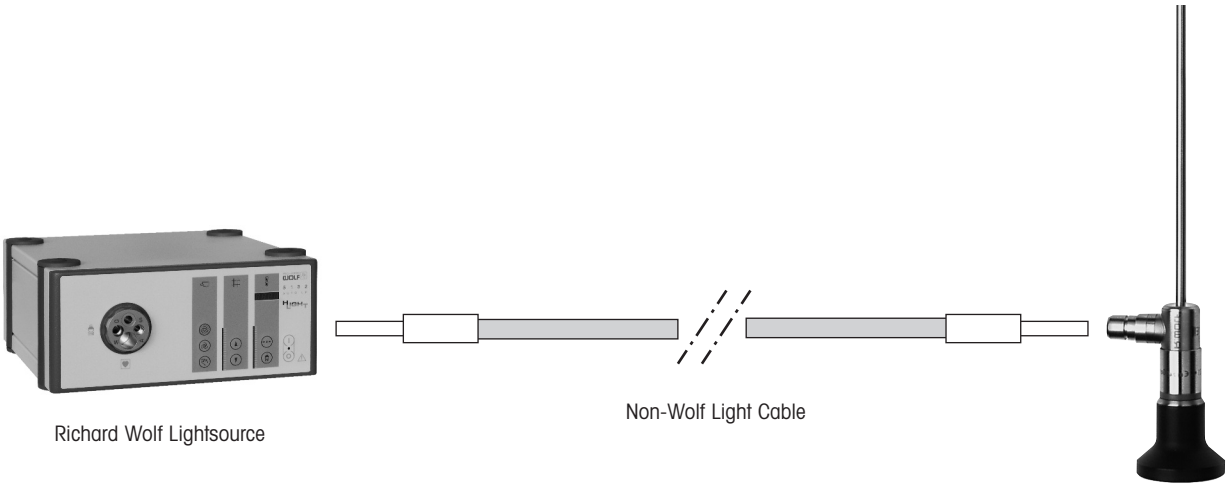

Fiber Light Cables

Video

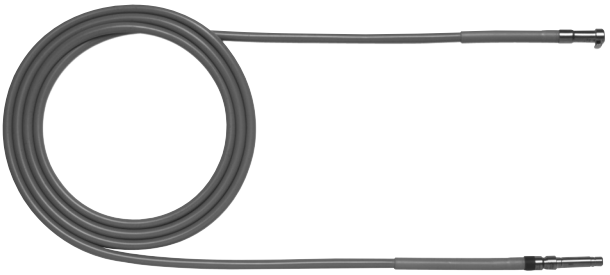

- **Straight Light Cables** offer versatility throughout all endoscopic fields
  1.6 mm x 1.8 M.....8061.16
  2.5 mm x 3 M 8061.256
  3.5 mm x 3 M 8061.356
  4.5 mm x 3 M 8061.456

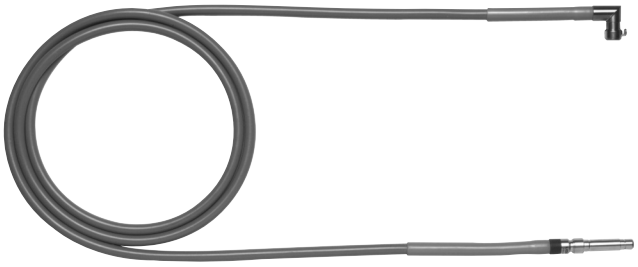

- **90° Right Angle Light Cables**
  2.5 mm x 3 M 8062.251
  3.5 mm x 3 M 8062.351
  4.5 mm x 3 M 8062.451

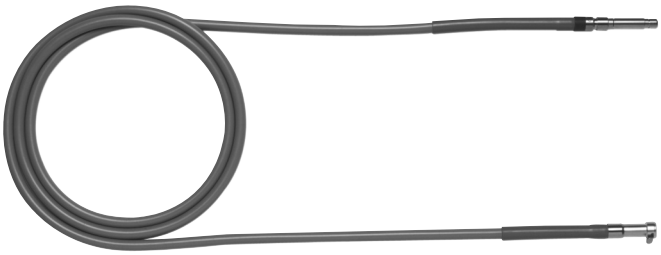

- **Translucent Light Cables**
  2.5 mm x 3 M, green 8069.256
  3.5 mm x 3 M, blue 8069.356
  4.5 mm x 3 M, purple 8069.456

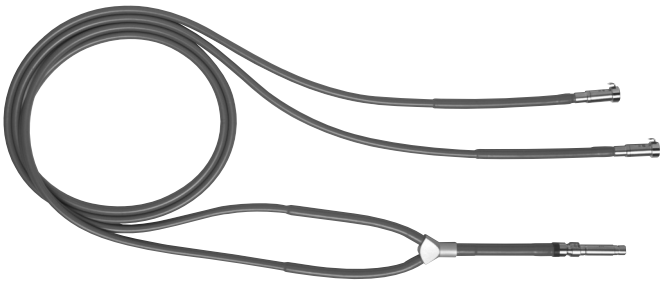

- **Dual Light Cables** allow two endoscopes to be used simultaneously with one light source
  3.5 mm x 2 M 8062.35

AUTOCLAVE
134° C / 273° F

Water Cleaning Gun

- Use with water or air
- Autoclavable
- Lightweight
- Heat insulated grip with easy trigger release
- New precision flow control mechanism
- Hooks up to standard faucet
- Wall mountable display rack for easy access to attachments.

Water Cleaning Gun
complete with attachments 6199.00

Cleaning Brushes

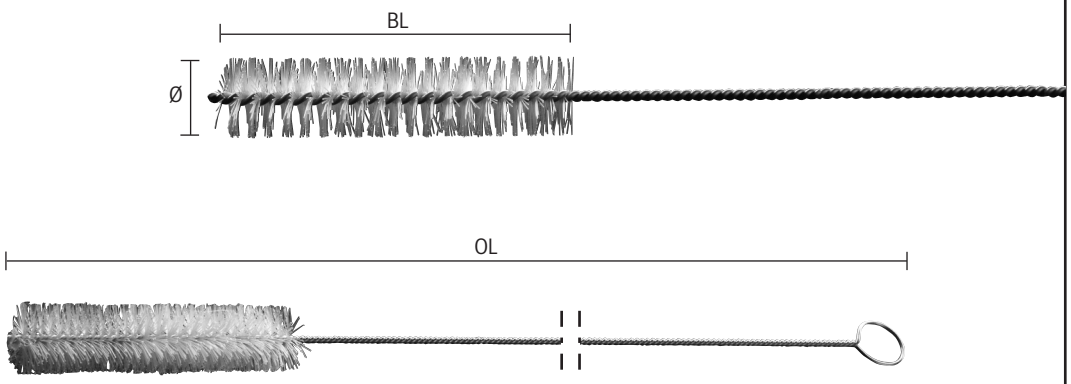

Ø mm	Brush length BL mm	Overall length OL mm	Example of areas of application	Types
11	100	360	Sheaths and trocar sleeves	6.01
5	50	375	Endoscope guide tube for inserts and transporters	6.03
2	50	400	Electrode guide tubes for transporters	6.04
5	60	515	Operating laparoscope	6.05
5	50	240	Small-caliber sheaths (24 cm long)	6.06
1.3	25	610	Semi Rigid Ureteroscopes w/ 4 Fr. Channel	6.0640
0.8	12	610	Semi Rigid Ureteroscopes w/ 2.4 Fr. Channel	6.0624

Cleaning Accessories

Reprocessing

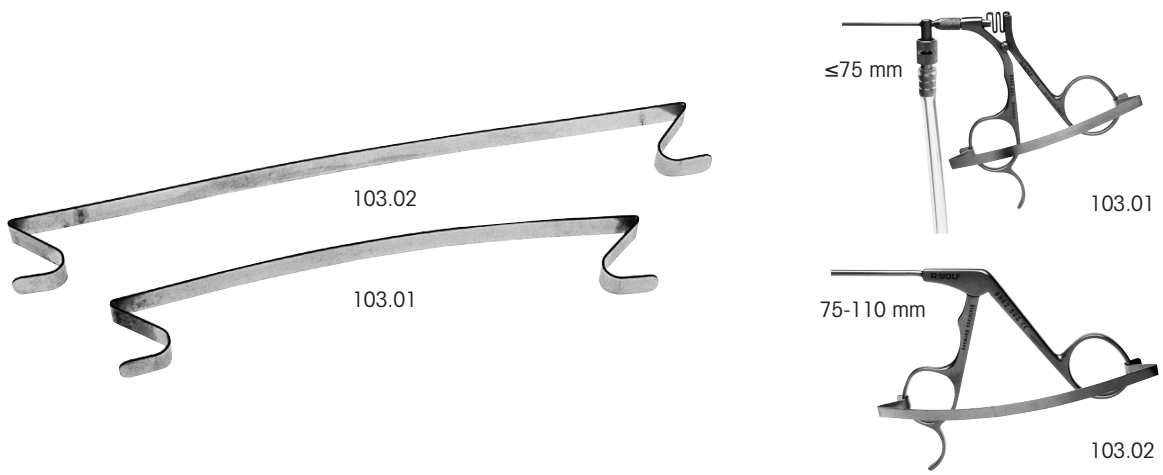

Cleaning clamp, short opening range up to 75 mm, 10 / pack	103.01
Cleaning clamp, long opening range up to 75-110 mm, 10 / pack	103.02

	Brush length BL	Type
Cleaning brush, autoclavable	42 mm	86.90

Hand Bulb, for blowing through channels, latex free	103.00

Ultra Stop

Multi-Use Endoscope Anti-Fogging Agent

Product:	ULTRASTOP pro med. 3 ml, . sterile
Description:	Colorless liquid with a typical odor of Ethyl Alcohol
Density (20°C):	0,868
Refractive Index (20°C):	1,368
Identity of:	
Triethanolamine Salt of an alkyl Benzenesulfonic Acid:	Passes
Sodium Alkylsulfat:	Passes
Ethyl Alcohol:	Passes

*The contents of the active ingredients are not shown in figures due to the proprietary nature of the composition.

Ultra Stop

Multi-Use Endoscope Anti-Fogging Agent, 1 unit / box.....102.01

Modes of Application

Take Ultrastop from the vial using a sterile hypodermic needle. Apply one droplet of Ultrastop from the needle to the dry, clean and cold glass surface. Allow Ultrastop time to react and evaporate. Now polish the glass surface clean and crystal clear using a sterile, non-fraying gauze cloth — applying only gentle pressure.

Alternatively you should dampen a sterile swab with Ultrastop and spread over the endoscope optic.

Since the original Ultrastop "pro med" 30 ml vial was filled under sterile conditions, and product itself contains high-proof ethanol, it may be used down to the very last drop if handled properly (remove with sterile needle, disinfect rubber pad before inserting needle!).

With Ultrastop "pro med" it is no longer necessary to warm the endoscope before the operation.

Ultrastop is an Austrian product first developed several years ago by SIGMAPHARM as a special anti-fog agent for use with medical optics and endoscopes in surgery. Meanwhile Ultrastop in 25ml droppers and 30ml vials is in use in hospitals throughout the world and conforms to the most stringent medical requirements.

The active components of Ultrastop form an almost monomolecular, transparent film on glass surfaces. The film is absolutely clear and transparent.

Mr. Clear

Single Use Endoscope Anti-Fogging Agent

- Dispense packet contents onto sterile field.
- Remove bottle cap and invert to ensure sponge is moist.
- Apply to distal end of endoscope.
- Repeat as necessary during procedure.

Mr. Clear
Single Use Endoscope Anti-Fogging Agent 20 / box 102.021

Spare Parts for Trocar Sleeves

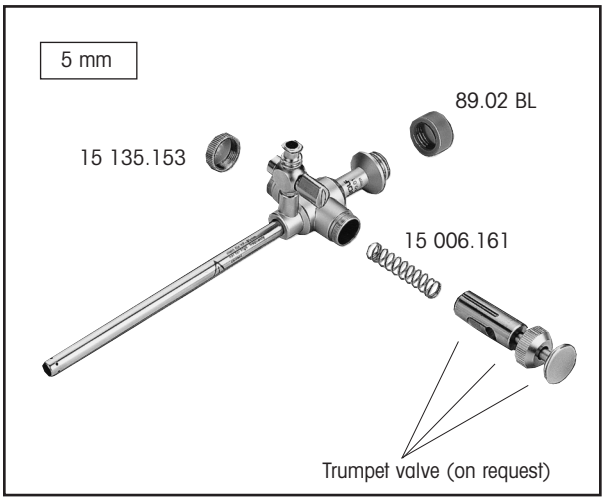

8940.01 / 8940.03

Base cover 15 135.153
Sealing caps,
12 / pkg, blue.....89.02 BL
Spring 15 006.161

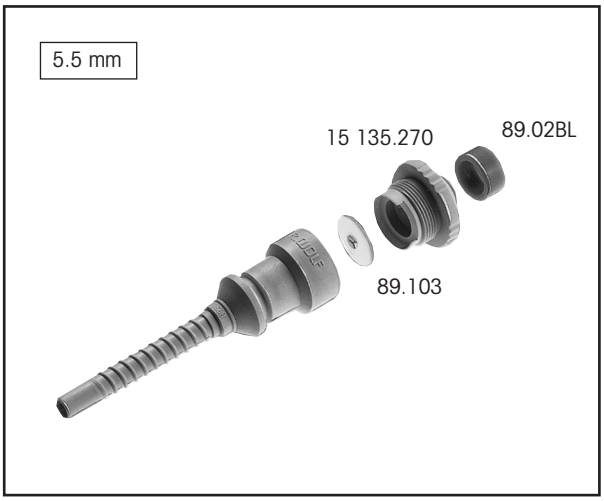

8920.001 / 8920.003

Cap housing,
complete 15 135.270
Membrane valves,
10 / pkg 89.103
Sealing caps,
12 / pkg, blue .....89.02 BL

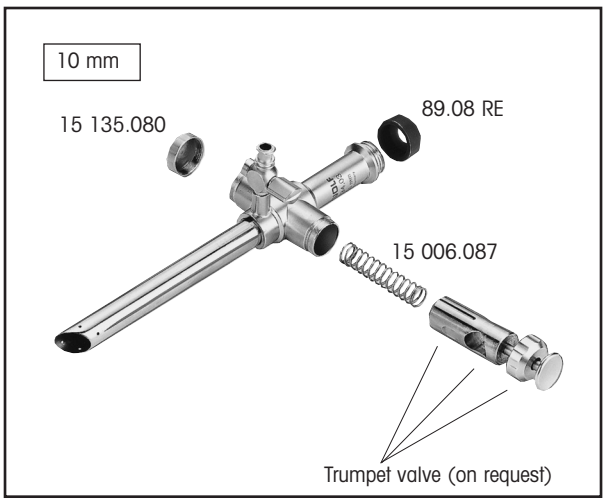

8934.01 / 8934.03 / 8934.071

Base cover 15 135.080
Sealing caps,
12 / pkg, red .....89.08 RE
Spring 15 006.087

Replacement Parts for Trocar Sleeves

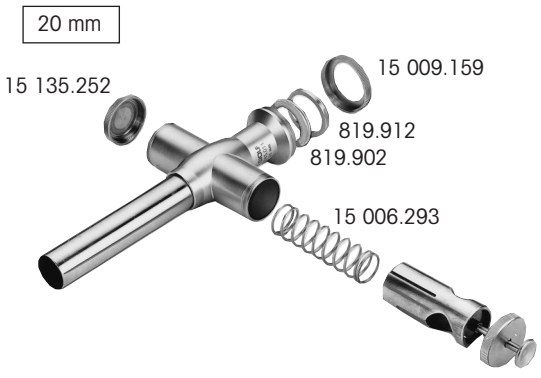

Trumpet valve (on request)

8945.011

Base cover.....15 135.252
Union nut.....15 009.159
Inner ring, metal.....819.912
Washer.....819.902
Spring.....15 006.293

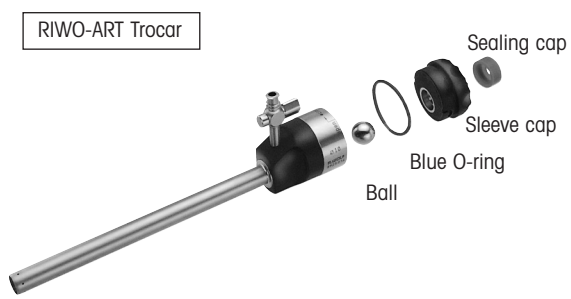

RIWO-ART Trocar

Replacement Sealing Caps
for 3.5 mm RIWO-ART trocar, 12 / pkg. ....89.01 RE
for 5.5 mm RIWO-ART trocar, 12 / pkg. ....89.02 BL
for 7 mm RIWO-ART trocar, 12 / pkg. ..... 89.171 BR
for 10 mm RIWO-ART trocar, 12 / pkg. ....89.08 RE
for 12.5 mm RIWO-ART trocar, 12 / pkg. ....89.09 BL

O-Rings
for 3.5 mm and 5.5 mm RIWO-ART trocars..... 8921.951
for 7 mm, 10 mm and 12.5 mm RIWO-ART trocars..... 8923.951

Ball Valve
for 3.5 mm and 5.5 mm RIWO-ART trocars..... 8921.901
for 7 mm, 10 mm and 12.5 mm RIWO-ART trocars..... 8923.901

Sleeve Cap
for 3.5 mm.....15 157.190
for 5.5 mm.....15 157.189
for 7 mm.....15 114.043
for 10 mm.....15 114.045
for 12.5 mm.....15 114.044

Replacement Parts for Bipolar Instruments
Classic Kleppinger Style

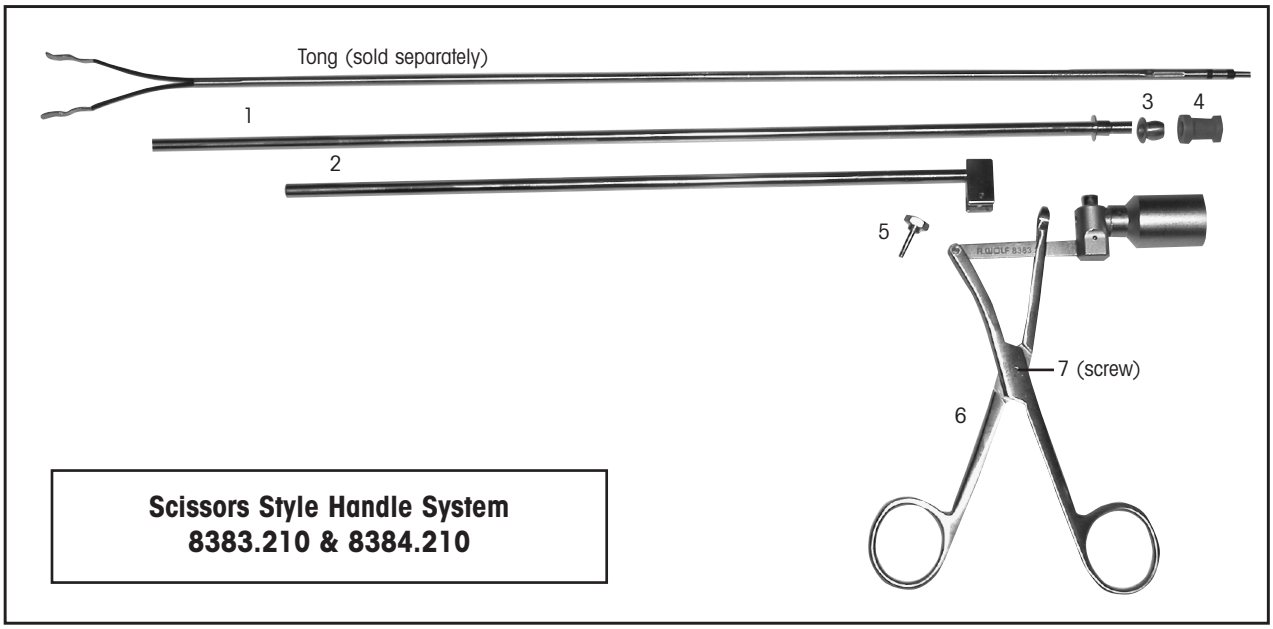

Parts	8383.210 (32 cm WL)	8384.210 (45 cm WL)
1) Guide Tubing	15181.002	15181.003
2) Outer Shaft	N900191	N900193
3) Sealing Cap Housing	15072.014	15072.014
4) Sealing Cap	88.04GR	88.04GR
5) Hex Head Screw	N110061	N110061
6) Handle Assembly	N900177	N900177
7) Screw	N110092	N110092

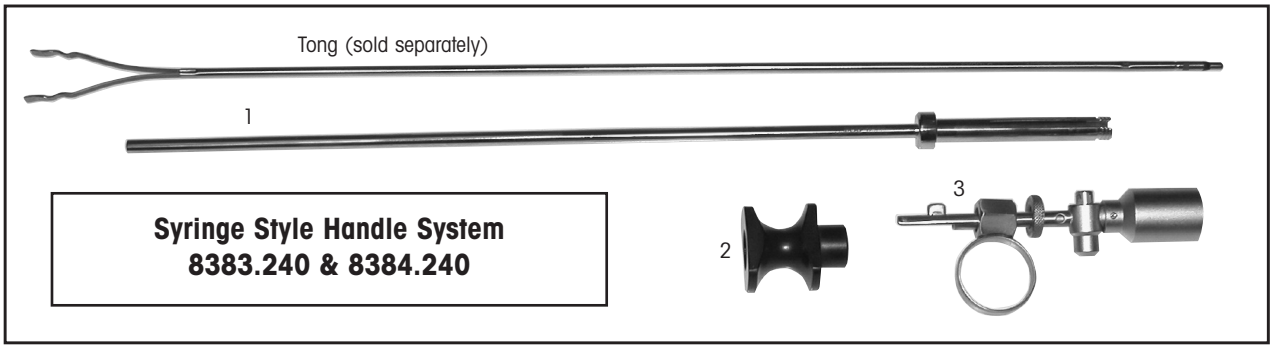

Parts	8383.240 (32 cm WL)	8384.240 (45 cm WL)
1) Guide Tubing	N900128	N900129
2) Finger Guide	N230049	N230049
3) Thumb-ring Assembly	N900132	N900132

Miscellaneous Replacement Parts

Miscellaneous Replacement Parts
O-Ring for rotatable stopcock 15364.068
RW Mount Eyepiece 8885.901

Luer Connectors
Luer connector, male,
3 mm 886.00
4 mm 886.01
Luer connector, female,
3 mm 891.00
4 mm 891.011
Luer lock cap
3 mm Luer connector 887.00
4 mm Luer connector 887.01
Luer lock connecter, male,
3 mm 884.00
4 mm 884.01
Luer lock connector, two-way stopcock, male,
3 mm 883.00
4 mm 883.01
Luer lock connecter, two-way stopcock, male,
water inlet from left,
4 mm 883.12

Conical irrigation adapter for catheters:
(with wide tunnel for catheters to attach two-way stopcock or locking stopcock),
4 mm 883.01

Metal Port Fitting
Metal Instrument Port Fitting 15256.382
Mini Membrane Valve 10 / pack 89.101

Flush Port Caps for forceps
plastic replacement caps, 10 / pack 88.944
metal replacement cap, ea.....887.00

Removeable Plastic Stopcocks
Two dot style, pkg / 5 .....896.0001
Three dot style, pkg / 5 .....896.0002
Four dot style, pkg / 5 .....896.0003
Stopcock removal tool 38310.0001

Lubricating Oil
for forceps, taps, trocar sleeves.....WO51

Replacement Parts for Verres Cannula
8302.08 / .12 / .15
Stopcock knob 15039.008
Stopcock valve cap 15040.012
Pin 15020.076
Spring (inside cap) 15006.176
Luer connector 886.00

Sealing Caps
Type S:
88.00RE: 12 / pkg .....red .....no hole
88.005RE: 12 / pkg .....red.....up to 1 mm
88.01RE: 12 / pkg .....red .....1 mm - 2 mm
18.01RE, long: 12 / pkg .....red .....1 mm - 2 mm
88.02BL: 12 / pkg .....blue .....2 mm - 3 mm
88.03BK: 12 / pkg .....black .....3 mm - 4 mm
88.04GR: 12 / pkg .....green .....4 mm - 5 mm
Type C:(for fittings greater than 5.5 mm or less)
89.00BK: 12 / pkg .....black .....up to 2 mm
89.01RE: 12 / pkg .....red .....2 mm - 3 mm
89.02BL: 12 / pkg .....blue .....3 mm - 4 mm
89.03GY: 12 / pkg .....grey .....5 mm - 6 mm
89.04BR: 12 / pkg .....brown.....6 mm - 7 mm
89.05YE: 12 / pkg .....yellow .....7 mm - 8 mm
89.06GR: 12 / pkg .....green .....8 mm - 9 mm
89.07BK: 12 / pkg .....black.....9 mm - 9.5 mm
Type C:(for fittings greater than 5.5 mm)
89.90RE (self sealing): 12 / pkg ....red .....3.4 mm - 4.5 mm
89.20RE (15 mm): 12 / pkg .....red .....no hole
89.171BR: 12 / pkg .....brown.....6 mm - 7 mm
89.08RE: 12 / pkg .....red .....9.5 mm - 10 mm
89.09BL: 12 / pkg .....blue .....10 mm - 12 mm
89.10RE: 12 / pkg .....red .....13 mm - 14 mm
89.21RE (17 mm): 12 / pkg .....red .....no hole

Sealing Membrane Valve
replacement membrane valves, 10 / pack 89.103

Accessory Box
3.25″ L x 1.5″ W x 1″ D, metal, for small loose items,
such as sealing caps, stopcocks.....8585.911

Sealing Cap Chart

TYPE S

Sealing Cap	Color	Insert Capacity
88.00RE	Red	No Hole
88.005RE	Red	Up to 1mm
88.01RE	Red	1mm to 2mm
18.01RE (long)	Red	1mm to 2mm
88.02BL	Blue	2mm to 3mm
88.03BK	Black	3mm to 4mm
88.04GR	Green	4mm to 5mm
84.012	White	3-6Fr.
84.022	Gray	6-9Fr.

TYPE C — For fittings 5.5mm or less

Sealing Cap	Color	Insert Capacity
89.00BK	Black	Up to 2mm
89.01RE	Red	2mm to 3mm
89.02BL	Blue	3mm to 4mm
89.03GY	Grey	5mm to 6mm
89.04BR	Brown	6mm to 7mm
89.05YE	Yellow	7mm to 8mm
89.06GR	Green	8mm to 9mm
89.07BK	Black	9mm to 9.5mm

TYPE C — For fittings greater than 5.5mm

Sealing Cap	Color	Insert Capacity
89.90RE (self sealing)	Red	3.4mm to 4.5mm
89.20RE (15mm)	Red	No Hole
89.171BR	Brown	6mm to 7mm
89.08RE	Red	9.5mm to 10mm
89.09BL	Blue	10mm to 12mm
89.10RE	Red	13mm to 14mm
89.21RE (17mm)	Red	No Hole

(End view illustrations are not shown at actual size.)

RICHARD WOLF