※To prevent irregular winding of the wire rope around the drum, keep the fleet angle 2 degrees or less.
Please install the pulley 2550mm or more away from the drum on the center line of the drum.
※The value of specified "Wire Rope Tension" on this drawing is for the standard layer or less.
The value of the "Wire Rope Tension" must be decreased accordance with the ratio of the actual winding layers, if it exceeded.

Specifications

(The wire rope composition is a manufacturer recommendation.)

Load Rating Wire Rope Tension	9,800N(=1,000kgf) 3rd Layer(Standard Layer)	Handle Force	Handle Length 300mm	Number of Wire Rope Winding Layer 1st Layer 133N(=13.5kgf) 2nd Layer 157N(=16.0kgf) 3rd Layer 182N(=18.5kgf)
Drum Capacity	Wire Rope 5-Layer Windings φ8mm(6×37)×35m		Wire Rope Tension 9,800N	
Gear Ratio	1/12.6	Standard Accesories		One Handle
Effective Handle Length	300mm(Maximum)			One Hex Wrench for Anchoring the Wire Rope
Weight	16.6kg(Winch+Handle)	Painting		

[Material of the main part of the winch]

Gear case, Gear case cover, Side frame, Drum, Bed plate, Clutch cover, Handle arm	SUS304
Drum shuft, Clutch pinion	SUS304
Main gear, Pinion gear	SCM415
Spur gear	S25C
Bolts/Nuts, Retaining rings, Springs, etc.	SUS304
Ball bearings	SUS440C
Clutch	CAC403
Mechanical brake parts except clutch	SUS303 SUS304 SUS420J2

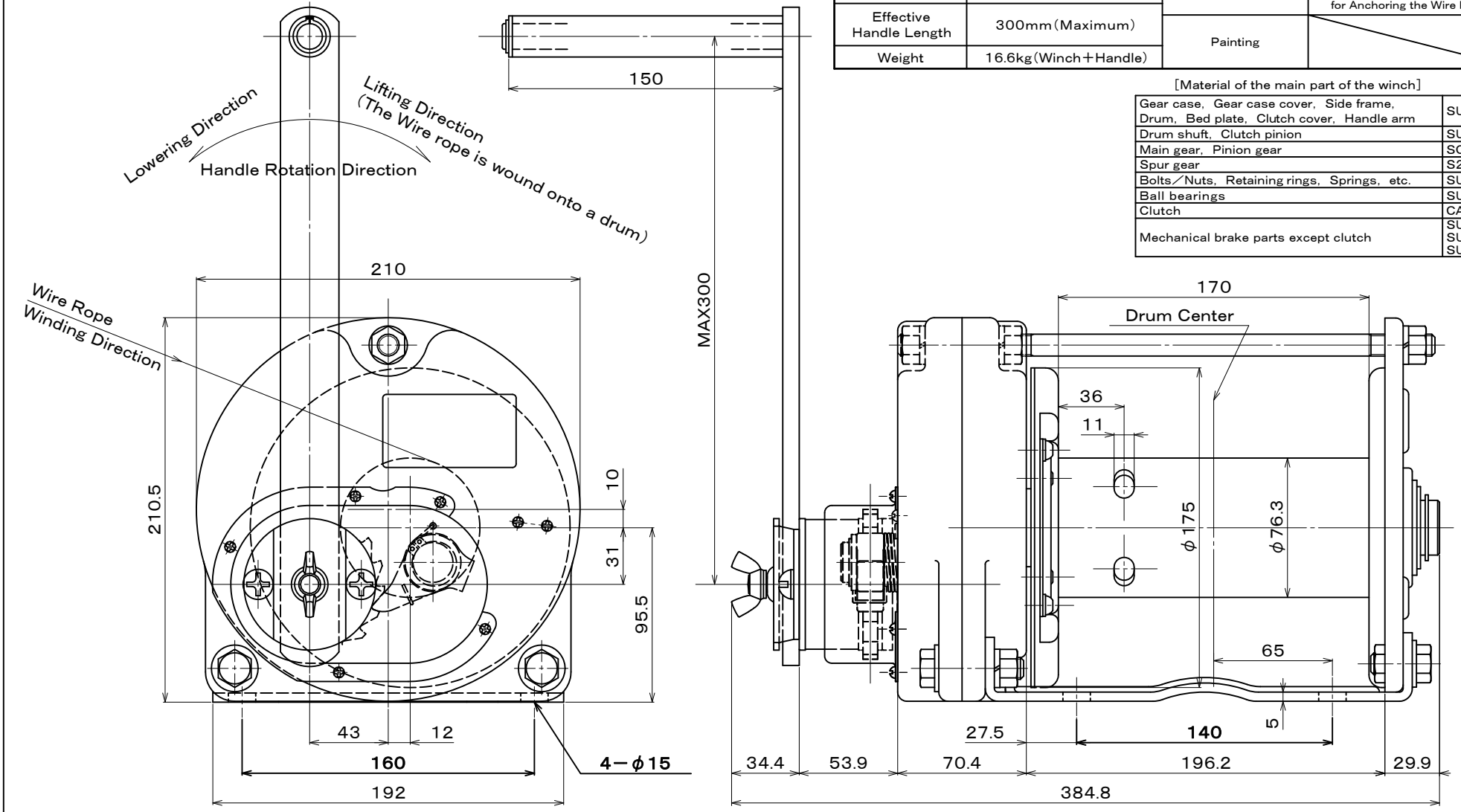

4 ×			図面番号/DRAWING No. ESB10SI-161031-01E	改訂番号 REVISION No. 00	お客様/CUSTOMER	符号 MARK	項目 PARTICULARS	材料 MATERIAL	数量 QTY	単体 PER ONE / 合計 TOTAL / 重量(kg) WEIGHT	備考 REMARKS
3 ×			承認/APPROVED 設計部 '16.10.31 米澤	検図/CHECKED 設計部 '16.10.31 松嶺	作成/DRAWN 設計部 '16.10.31 武松	図面名/TITLE MAXPULL STAINLESS STEEL WINCH (ELECTROPOLISHING) STOPPER ARMLESS ROTATING MODEL ESB-10-SI					
2 ×						投影法/PROJECTIOJN METHOD 第三角法 THIRD ANGLE PROJECTION					
1 ×						尺度/SCALE :	台数/QTY				
改訂/REVISION											

MAXPULL MACHINERY & ENGINEERING CO.,LTD.
マックスプル工業株式会社