A

B

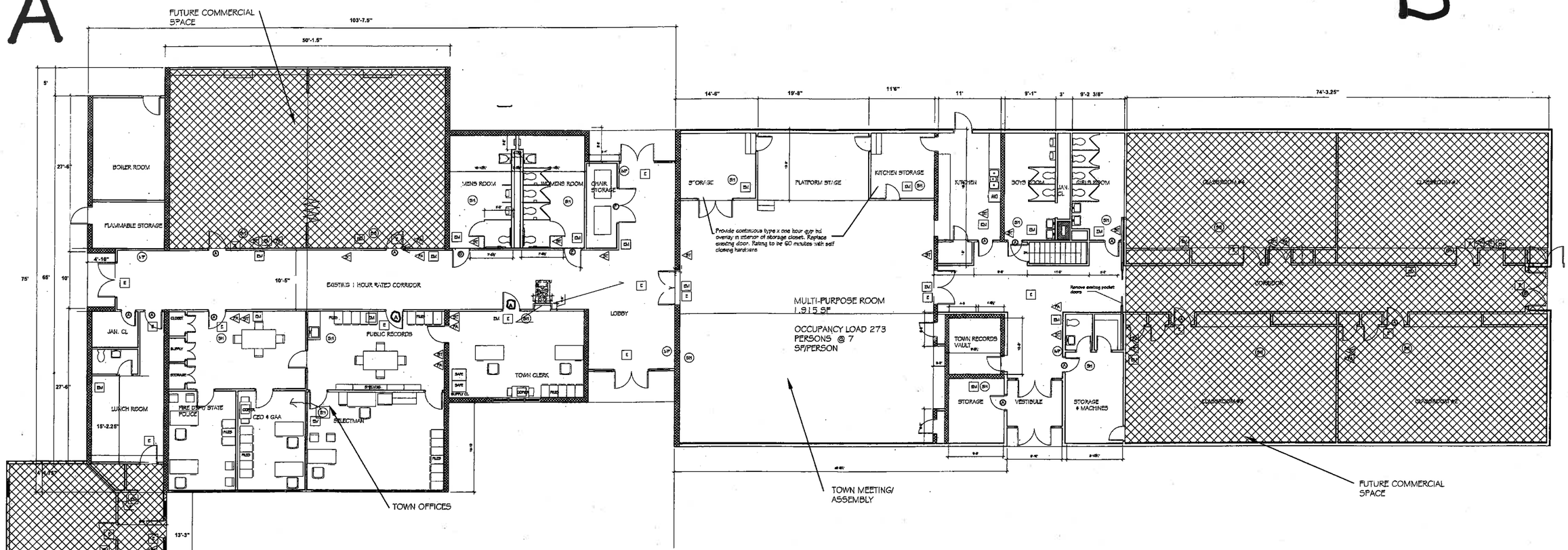

C

	SIZE	FIRE RATING	HARDWARE	REMARKS
A	3068	45 MINUTE	ADA ACCESSIBLE	NEW SELF CLOSING HINGE AND ADA HARDWARE. HARDWARE MUST MATCH EXISTING

D	3068	45 MINUTE	ADA ACCESSIBLE SELF CLOSING	NEW
E	3068	45 MINUTE	ADA ACCESSIBLE SELF CLOSING	NEW
F	3068	45 MINUTE	ADA ACCESSIBLE SELF CLOSING	NEW

FIRE AND EMERGENCY EQUIPMENT

Symbol Key

- MP MANUAL PULL FIRE ALARM
- SD SMOKE AND/OR HEAT DETECTOR AS REQUIRED
- E ILLUMINATED EXIT SIGN
- NE ILLUMINATED NO EXIT SIGN
- STROBE
- EL EMERGENCY LIGHTING
- FA FIRE ALARM

- Re-use existing combination fire alarm and strobes where possi ble

- Emergency Lighting and illuminated exit, no exit signs shall have . . a minimum of 90 minutes battery backup.

- Re-use manual pull stations where possible.

ADA Bathrooms

1. **See drawing D1.1 for demolition for ADA bathrooms**
2. **See drawing A1.1 for details for new ADA bathrooms**
3. **See specifications for plumbing and product guide.**

ADA Hardware, Life Safety Upgrades

1. **Provide ADA door hardware in accordance with above schedule.**
2. **Provide one- hour gypboard overlay in rooms off multi-purpose r room.**
3. **Provide fire/emergency equipment in accordance with above schedule.**
4. **Remove pocket doors in old school.**

D

4.16.3 HEIGHT AND CLEARANCES.
LAVATORIES SHALL BE MOUNTED WITH THE RIM OR COUNTER SURFACE NO HIGHER THAN 34 IN (865 MM) ABOVE THE FINISH FLOOR. PROVIDE A CLEARANCE OF AT LEAST 29 IN (735 MM) ABOVE THE FINISH FLOOR TO THE BOTTOM OF THE APRON. KNEE AND TOE CLEARANCE SHALL COMPLY WITH FIG. 31.

4.19.3 CLEAR FLOOR SPACE.
A CLEAR FLOOR SPACE 30 IN BY 48 IN (760 MM BY 1220 MM) COMPLYING WITH 4.2.4 SHALL BE PROVIDED IN FRONT OF A LAVATORY TO ALLOW FORWARD APPROACH. SUCH CLEAR FLOOR VALVES ARE USED THE FAUCET SHALL REMAIN OPEN FOR AT LEAST 10 SECONDS.

4.19.6 MIRRORS.
MIRRORS SHALL BE MOUNTED WITH THE BOTTOM EDGE OF THE REFLECTING SURFACE NO HIGHER THAN 40 IN (1015 MM) ABOVE THE FINISH FLOOR.

4.16.3 Height.
The height of water closets shall be 17 in to 19 in (430 mm to 485 mm), measured to the top of the toilet seat. Seats shall not be sprung to return to a lifted position.

4.16.4 Grab Bars.
Grab bars for water closets not located in stalls shall comply with 4.26 and Fig. 28. The grab bar behind the water closet shall be 36 in (915 mm) minimum.

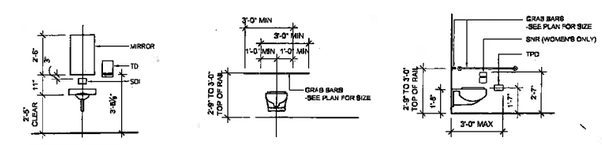

BARRIER FREE LAVATORY

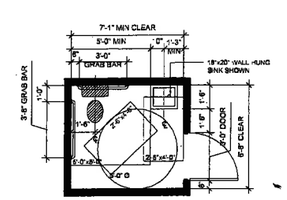

SAMPLE LAYOUT OF SINGLE USER TOILET ROOM

NOTE: DASHED LINES INDICATE CLEAR FLOOR SPACES PER ANSI A117.1-1986 ED.

TYPICAL ADA COMPLIANT BATH FIXTURE D

Baldwin Consolidated School
536 Pequawket Trail
W. Baldwin, Maine 04091

First Floor Plan Scale 3/32"=1'-0"
- Exisitng July 27, 2016
Life Safety Equipment

A1.11

A

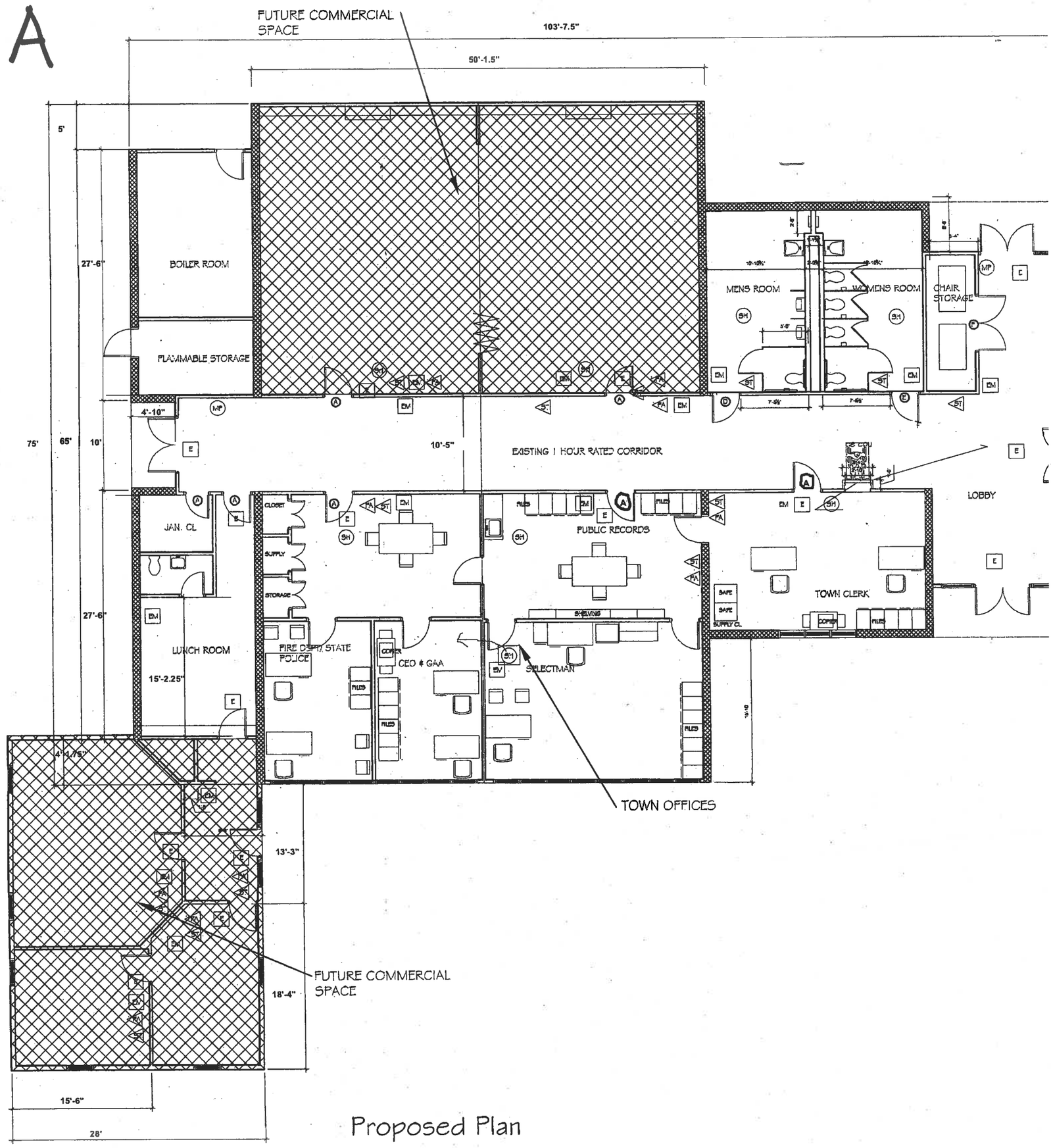

Proposed Plan

Baldwin Consolidated School
536 Pequawket Trail
W. Baldwin, Maine 04091

First Floor Plan
- Exisitng
Life Safety Equipment

Scale 3/32"=1'-0"
July 27, 2016

A1.11

* EDITED *

B

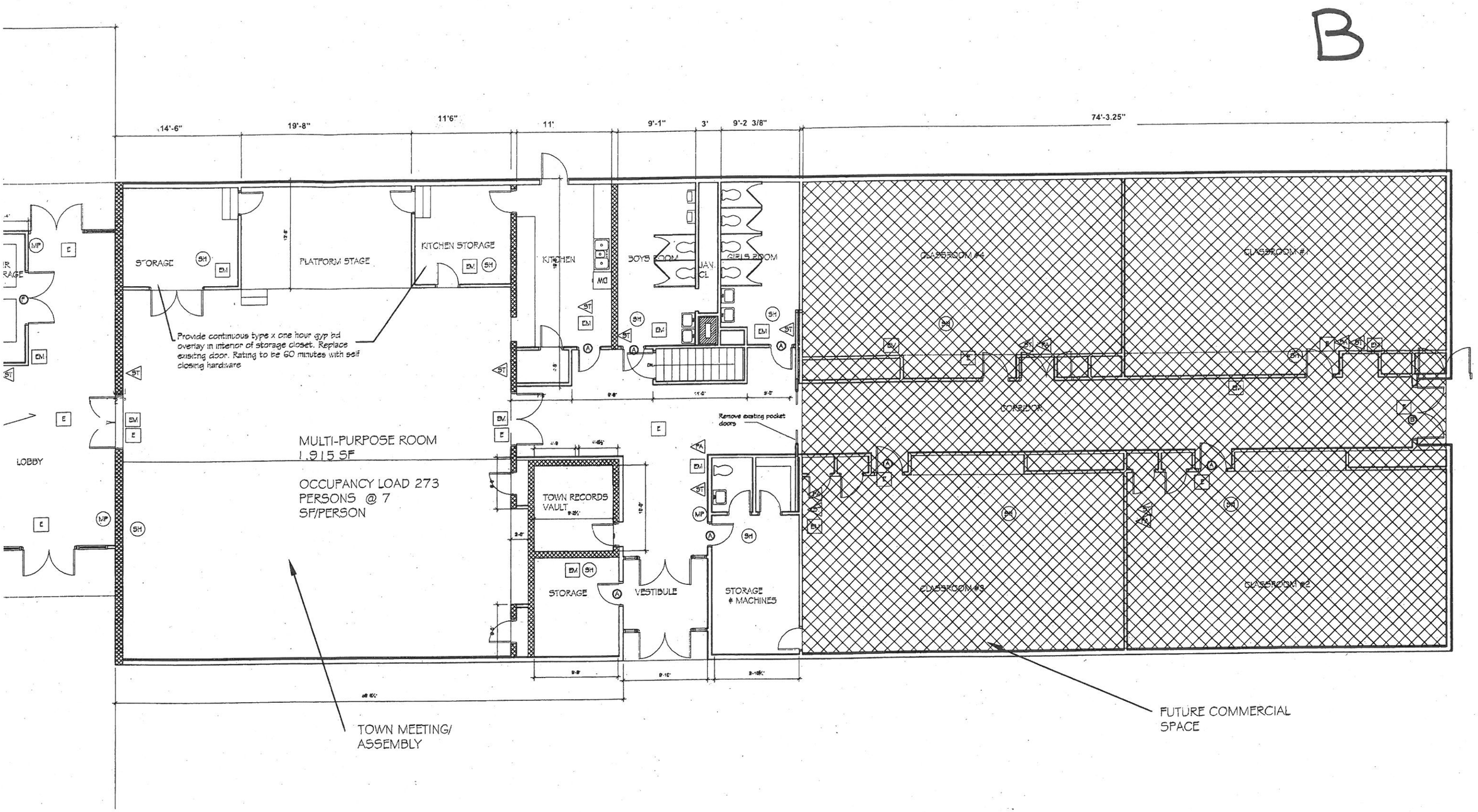
14'-6"
19'-8"
11'6"
11'
9'-1"
3'
9'-2 3/8"
74'-3.25"
STORAGE
PLATFORM STAGE
KITCHEN STORAGE
KITCHEN
BOYS ROOM
GIRLS ROOM
CLASSROOM #4
CLASSROOM #1
Provide continuous type x one hour gyp bd overlay in interior of storage closet. Replace existing door. Rating to be 60 minutes with self closing hardware
CORRIDOR
Remove existing pocket doors
LOBBY
MULTI-PURPOSE ROOM
1,915 SF
OCCUPANCY LOAD 273
PERSONS @ 7
SF/PERSON
TOWN RECORDS VAULT
STORAGE
VESTIBULE
STORAGE & MACHINES
CLASSROOM #3
CLASSROOM #2
TOWN MEETING/
ASSEMBLY
FUTURE COMMERCIAL
SPACE

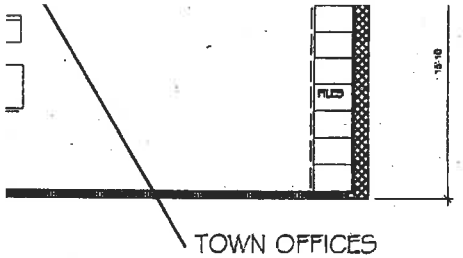

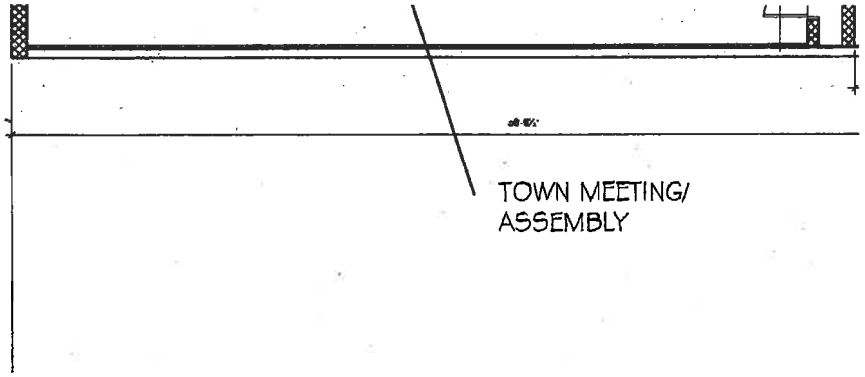

	SIZE	FIRE RATING	HARDWARE	REMARKS
A	3068	45 MINUTE	ADA ACCESSIBLE	ADD SELF CLOSING DEVICE AND ADA COMPLIANT HARDWARE WITH POSITIVE LATCHING

D	3068	45 MINUTE	ADA ACCESSIBLE. SELF CLOSING	NEW
E	3068	45 MINUTE	ADA ACCESSIBLE. SELF CLOSING	NEW
F	6068	45 MINUTE	ADA ACCESSIBLE. SELF CLOSING	NEW

C

FIRE AND EMERGENCY EQUIPMENT

Symbol Key

- MP MANUAL PULL FIRE ALARM
- SH SMOKE AND/OR HEAT DETECTOR AS REQUIRED
- E ILLUMINATED EXIT SIGN
- NE ILLUMINATED NO EXIT SIGN
- ST STROBE
- EM EMERGENCY LIGHTING
- FA FIRE ALARM

- **Re-use existing combination fire alarm and strobes where possi ble**
- **Emergency Lighting and illuminated exit, ~~no~~ exit signs shall have a minimum of 90 minutes battery backup.**
- **Re-use manual pull stations where possible.**

ADA Bathrooms

1. **See drawing D1.1 for demolition for ADA bathrooms**
2. **See drawing A1.1 for details for new ADA bathrooms**
3. **See specifications for plumbing and product guide.**

ADA Hardware, Life Safety Upgrades

1. **Provide ADA door hardware in accordance with above schedule.**
2. **Provide one- hour gypboard overlay in rooms off multi-purpose room.**
3. **Provide fire/emergency equipment in accordance with above schedule.**
4. **Remove pocket doors in old school.**

D

4.19.2 HEIGHT AND CLEARANCES.
LAVATORIES SHALL BE MOUNTED WITH THE RIM OR COUNTER SURFACE NO HIGHER THAN 34 IN (865 MM) ABOVE THE FINISH FLOOR. PROVIDE A CLEARANCE OF AT LEAST 29 IN (735 MM) ABOVE THE FINISH FLOOR TO THE BOTTOM OF THE APRON. KNEE AND TOE CLEARANCE SHALL COMPLY WITH FIG. 31.

4.19.3 CLEAR FLOOR SPACE.
A CLEAR FLOOR SPACE 30 IN BY 48 IN (760 MM BY 1220 MM) COMPLYING WITH 4.2.4 SHALL BE PROVIDED IN FRONT OF A LAVATORY TO ALLOW FORWARD APPROACH. SUCH CLEAR FLOOR VALVES ARE USED THE FAUCET SHALL REMAIN OPEN FOR AT LEAST 10 SECONDS.

4.19.6* MIRRORS.
MIRRORS SHALL BE MOUNTED WITH THE BOTTOM EDGE OF THE REFLECTING SURFACE NO HIGHER THAN 40 IN (1015 MM) ABOVE THE FINISH FLOOR.

4.16.3* Height.
The height of water closets shall be 17 in to 19 in (430 mm to 485 mm), measured to the top of the toilet seat. Seats shall not be sprung to return to a lifted position.

4.16.4* Grab Bars.
Grab bars for water closets not located in stalls shall comply with 4.26 and Fig. 29. The grab bar behind the water closet shall be 36 in (915 mm) minimum.

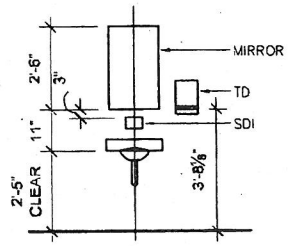

BARRIER FREE LAVATORY

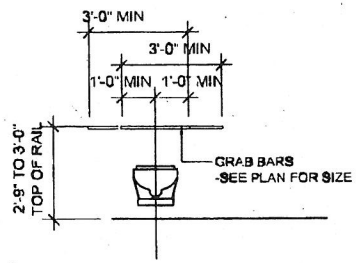

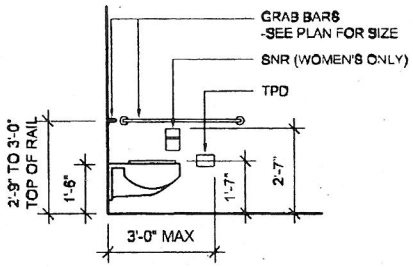

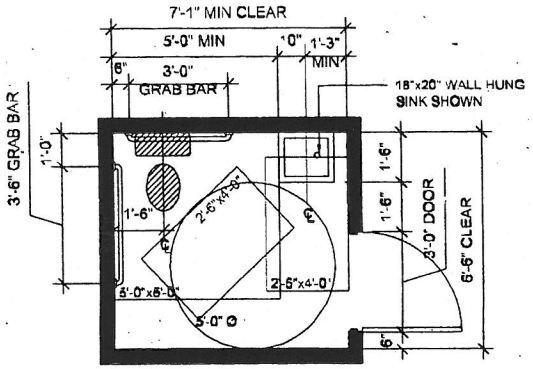

SAMPLE LAYOUT OF SINGLE USER TOILET ROOM

NOTE: DASHED LINES INDICATE CLEAR FLOOR SPACES PER ANSI A117 1-1986 ED.

TYPICAL ADA COMPLIANT BATH FIXTURE DET.

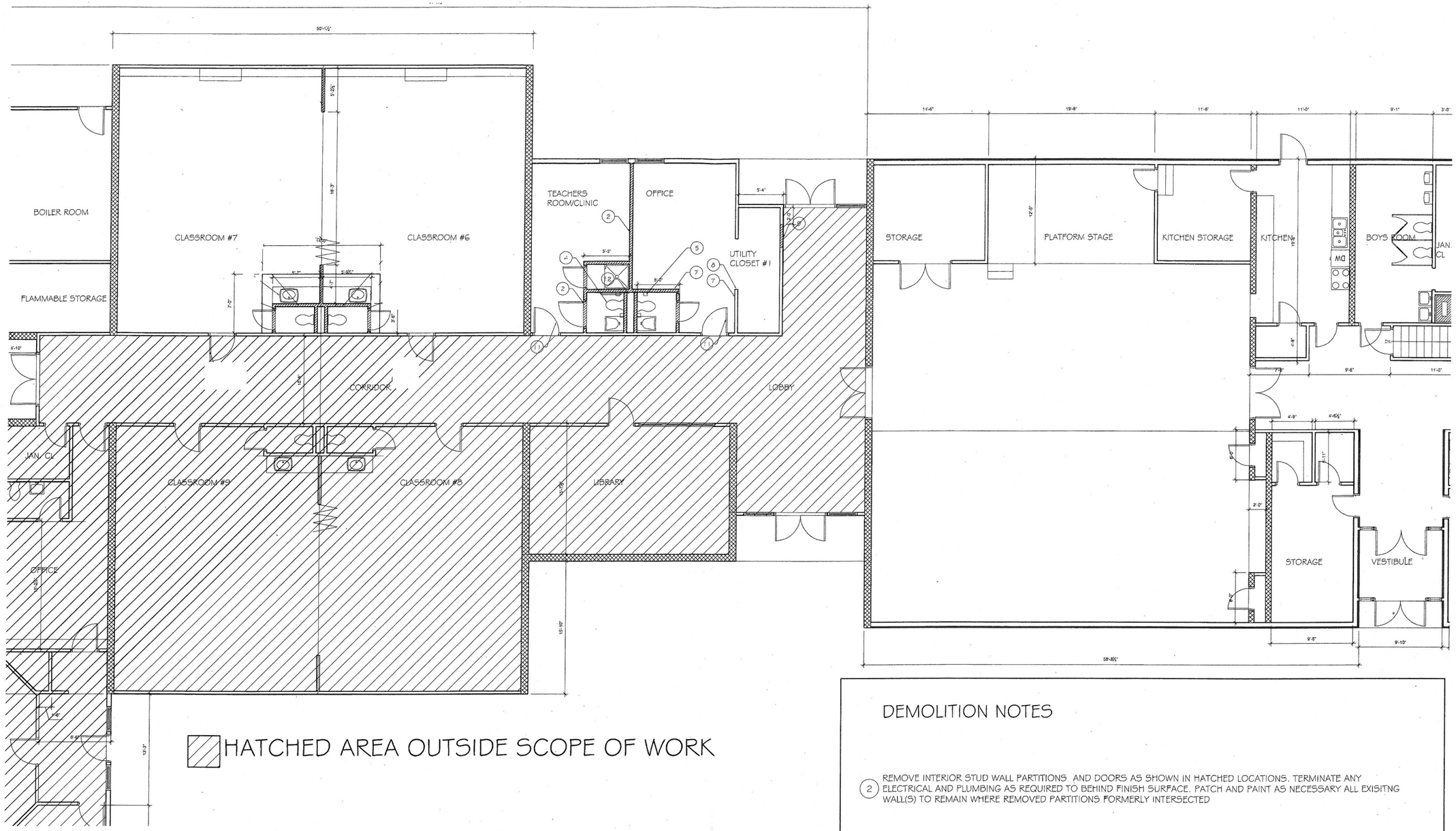

Baldwin Consolidated School Renovation
536 Pequawket Trail
W. Baldwin, Maine 04091

First Floor Plan - Demolition

Scale 1/4"=1'-0"
January 4, 2016

D1.1

DEMOLITION NOTES

(2) REMOVE INTERIOR STUD WALL PARTITIONS AND DOORS AS SHOWN IN HATCHED LOCATIONS. TERMINATE ANY ELECTRICAL AND PLUMBING AS REQUIRED TO BEHIND FINISH SURFACE. PATCH AND PAINT AS NECESSARY ALL EXISITNG WALL(S) TO REMAIN WHERE REMOVED PARTITIONS FORMERLY INTERSECTED

(4) REMOVE IN ITS ENTIRETY ALL PLUMBING AND BATH FIXTURE. SAVE TOILET AND FLUSH VAVLE FOR POSSIBLE RE-USE. CAP WASTE AND WATER LINES TO BEHIND FINISHED SURFACE OR PREPARE FOR RE-ASSEMBLY AS REQUIRED

(5) REMOVE ALL BATHROOM ACCESSORIES (i.e. tiolet paper holders. soap dispensers, grab bar and paper towel holders) SAVE FOR RE-USE

(7) REMOVE FIRE ALARM AND SECURITY PANELS AND RELOCATE TO UTILITY CLOSET #1

(8) REMOVE TRIM FROM AROUND OPENING AND PREP FOR NEW INFILL WALL

(9) PROVIDE OPENING IN EXISITNG WALL FOR NEW 3068 DOOR

(11) REMOVE DOOR HARDWARE RETURN INTACT TO OWNER FOR NEW ADA COMPLIANT ASSEMBLY

(12) REMOVE PLUMBING WASTE LINE TO THRU SLAB STUB UP LOCATION. CAP UNTILL INSTALLTION OF NEW WASTE LINE ASSEMBLY

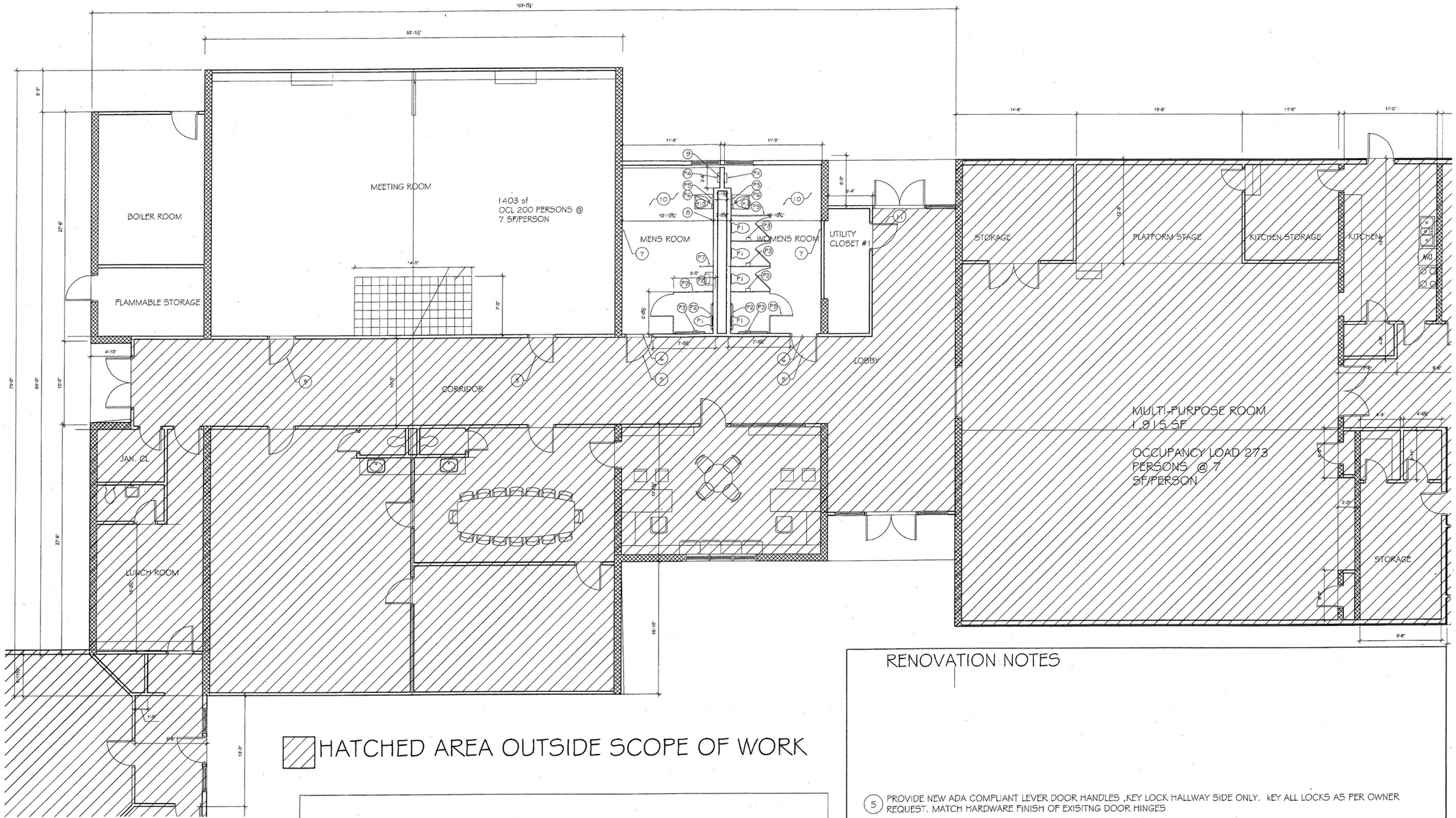

HATCHED AREA OUTSIDE SCOPE OF WORK

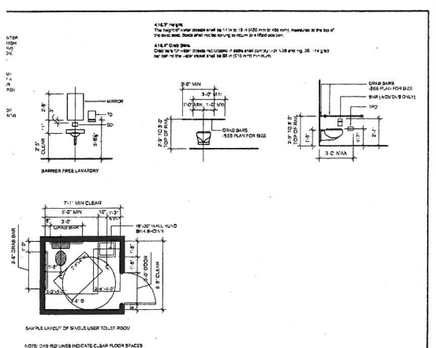

RD DETAILS - PLUMBING FIXTURE
CESSORIES

PLUMBING FIXTURE AND ACCESSORY SCHEDULE

FIXTURE	MODEL	COLOR	NOTES
P1	ZURN HET ELONGATED WALL HUNG ECO-VANTAGE FLUSH VALVE TOILET MODEL# Z5615-BWL	WHITE	SEE PRODUCT LITERATURE FOR FLUSH VALVE MODEL # Z6000AV
P2	BOBRICK 1 1/2" DIA. SS GRAB BAR AND FLANGE SERIES B-6806 .	SS	SEE STANDARD DETAIL FOR SIZE,MOUNTING HEIGHT AND LOCATION. SEE PRODUCT LITERATURE
P3	BOBRICK SURFACE MOUNTED MULTI-ROLL TOILET TISSUE DISPENSER MODEL # B-2888	SS	SEE STANDARD DETAIL FOR MOUNTING HEIGHT AND LOCATION. SEE PRODUCT LITERATURE
P4	SURFACE MOUNTED PAPER TOWEL DISPENSER. MODEL # B-262	SS	SEE STANDARD DETAIL FOR MOUNTING HEIGHT AND LOCATION. SEE PRODUCT LITERATURE
P5	BOBRICK CHANNEL FRAME MIRROR 24 X 36 H PRODUCT CODE B-165 2436	SS	
P6	BOBRICK SURFACE MOUNTED SOAP DISPENSER MODEL # B-2112	SS	SEE STANDARD DETAIL FOR MOUNTING HEIGHT AND LOCATION. SEE PRODUCT LITERATURE
P7	BOBRICK SIERRA SEIRES (SCRC) URINAL PRIVACY SCREEN	TBD	SEE SPECIFICATIONS PROVIDED
P8	ZURN Z5798 WALL HUNG URINAL AND FLUSH VALVE	WHITE	SEE STANDARD DETAIL FOR MOUNTING HEIGHT AND LOCATION REQUIREMENTS
P9	BOBRICK 1902 SEIRES (SCRC) TOILET PARTITIONS	TBD	
P10	ZURN Z5830 WALL HUNG LAVATORY	WHITE	SEE SPECIFICATIONS PROVIDED FOR P TRAP WASTE LINE Z8995-3-PC AND FAUCET ASSEMBLY Z81101-XL BY ZURN

RENOVATION NOTES

5. PROVIDE NEW ADA COMPLIANT LEVER DOOR HANDLES ,KEY LOCK HALLWAY SIDE ONLY. KEY ALL LOCKS AS PER OWNER REQUEST. MATCH HARDWARE FINISH OF EXISITNG DOOR HINGES
6. NORTON HYDRAULIC MEDIUM DUTY, NON-HANDED, ALUMINUM DOOR CLOSER. MODEL # 8301 689 GRAINGER ITEM # 28XT67
7. FILL IN OPENING WITH 2X4 METAL STUDS FINISH WITH 1/2" SHEET ROCK BOTH SIDES. BLEND JOINTS TO EXISITNG WALL SURFACE
8. PROVIDE 2X6 PLUMBING CHASE WALL , SECURE TO FLOOR AND ROOF FRAMING. CHASE WALL TO ACCOMODATE FIXTURE CARRIERS AS REQUIRED, SEE PRODUCT LITERATURE AND PLUMBING SPECIIFCATIONS. FINISH OUTSIDE OF WALL WITH 1/2 SHEET ROCK. PRIME AND PAINT.FINISH TWO COATS WITH EGGSHELL FINISH COLOR TO BE SLECTED BY OWNER
9. PROVIDE 2X6 STUDWALL , SECURE TO FLOOR AND ROOF FRAMING. FINISH OUTSIDE OF WALL WITH 1/2 SHEET ROCK BOTH SIDES. PRIME AND PAINT. FINISH TWO COATS WITH EGGSHELL FINISH COLOR TO BE SLECTED BY OWNER
10. PROVIDE 12"X12" VCT FLOORING THROUGHOUT BATHROOM AREAS
11. Provide new 3068 doors and hardware door to be 45 minute rated in existing 1 hour wall construction. See A1.1 for details.

Baldwin Consolidated School Renovation
536 Pequawket Trail
W. Baldwin, Maine 04091

First Floor Plan - RENOVATION

Scale 1/4"=1'-0"
January 4, 2016

A1 1

Baldwin Consolidated School Renovation
536 Pequawket Trail
W. Baldwin, Maine 04091

Specifications and Product Guide

Jeffrey Fleming RA
Architect, State of Maine
68 Wards Hill Rd.
West Baldwin
Maine 04091
207-625-7331

WardHill
Architecture

SECTION 22 40 00
PLUMBING FIXTURES

PART 1 - GENERAL

1.1 SUBMITTALS

A. Submit all items listed in the "Products" section of this specification.

B. Submit plumbing fixture information in an assembled brochure, showing cuts and full detailed description of each fixture.

1.2 APPLICABLE PUBLICATIONS

A. American with Disabilities Act (A.D.A)

B. Environmental Protection Agency EPA PL 93-523 1974; A 1999) Safe Drinking Water Act.

C. Maine State Internal Plumbing Code - 2009.

D. Reduction of Lead in Drinking Water Act

PART 2 - PRODUCTS

2.1 STOPS

A. Provide quarter turn angle stops, straight stops or stops integral with faucet and tank type water closet, with each compression type faucet whether specifically called for or not, including sinks in wood and metal casework. Locate stops centrally above or below fixture in accessible location.

B. Supply from stops not integral with faucet shall be chrome plated copper flexible tubing or flexible stainless steel with inner core of non-toxic polymer.

C. Supply pipe from wall to valve stop shall be rigid threaded IPS copper alloy pipe, i.e. red brass pipe nipple, chrome plated where exposed.

D. All wetted components to be less than 0.25% lead by weight.

2.2 ESCUTCHEONS

Heavy type, chrome plated, with set screws. Provide for piping serving plumbing fixtures and at each wall, ceiling and floor penetrations in exposed finished locations and within cabinets and millwork.

2.3 CARRIERS

A. ASME/ANSI A112.6.1M, with adjustable gasket faceplate chair carriers for wall hung closets and urinals with auxiliary anchor foot assembly, hanger rod support feet, and rear anchor tie down. Provide Heavy Duty model rated for 500 lb load.

2.4 WATER CLOSETS

A. Water Closet- ADA, wall hung, commercial flush valve, elongated bowl, siphon jet 1.6 gallons per flush, wall outlet.

1. Seat: Institutional/Industrial, extra heavy duty, chemical resistant, solid plastic, open front less cover for elongated bowls, integrally molded bumpers, concealed check hinge with stainless steel post. Seat shall be posture contoured body design. Color shall be white.

2. Flush Valve: 1.6 gpf, large chloramines resistant diaphragm, semi-red brass valve body, exposed chrome plated, ADA approved side oscillating handle, top spud connection, adjustable tailpiece, one-inch IPS screwdriver back check angle stop with vandal resistant cap, high back pressure vacuum breaker, solid-ring pipe support, and sweat solder adapter with cover tube and cast set screw wall flange. Valve body, cover, tailpiece and control stop shall be in conformance with ASTM B584 Alloy classification for semi-red brass.

2.5 LAVATORIES

A. Dimensions for lavatories per product example in Fixture Schedule.

B. Brass components in contact with water shall contain no more than 0.25 percent lead content by dry weight.

C. Lavatory Wall Mount - ADA, ASME/ANSI A112.19.2M, straight back, first quality vitreous china. Punching for faucet on 102 mm (4 inches) centers. Set with rim to ADA compliant height.

1. Faucet: Solid cast brass construction, vandal resistant, heavy-duty lever handles. Provide laminar flow control device. All wetted components to be less than 0.25% lead by weight
2. Drain: Cast or wrought brass with flat grid strainer offset tailpiece, chrome plated. Provide cover per A.D.A 4-19.4.
3. Stops: Angle type, see paragraph 2.1 Stops. Provide cover per A.D.A 4-19.4.
4. Trap: Offset for ADA clearance, cast or drawn copper alloy, 1 1/2 inches by 1 1/4 inches P-trap. Adjustable with connected elbow 17 gauge tubing extensions to wall. Exposed metal trap surface and connection hardware shall be chrome plated with a smooth bright finish. Set trap parallel to wall. Provide cover per A.D.A 4-19.4.

PART 3 - EXECUTION

3.1 INSTALLATION

A. Fixture Setting: Opening between fixture and floor and wall finish shall be sealed as specified under Section 07 92 00, JOINT SEALANTS.

B. Supports and Fastening: Secure all fixtures, equipment and trimmings to partitions, walls and related finish surfaces. Exposed heads of bolts and nuts in finished rooms shall be hexagonal, polished chrome plated brass with rounded tops.

C. Expansion Bolts: For brick or concrete or other solid masonry. Shall be 1/4 inch diameter bolts, and to extend at least 3 inches into masonry and be fitted with loose tubing or sleeves extending into masonry. Wood plugs, fiber plugs, lead or other soft metal shields are prohibited.

D. Tightly cover and protect fixtures and equipment against dirt, water and chemical or mechanical injury.

E. Provide Water Hammer Arrestor at termination of 2" Cold Water Supply Header.

3.2 CLEANING

At completion of all work, fixtures, exposed materials and equipment shall be thoroughly cleaned.

---END---

Z1203-ND4

ADJUSTABLE HORIZONTAL BACK TO BACK SIPHON JET-NO HUB

SPECIFICATION SHEET

TAG _____

Dimensional Data (inches and [mm]) are Subject to Manufacturing Tolerances and Change Without Notice

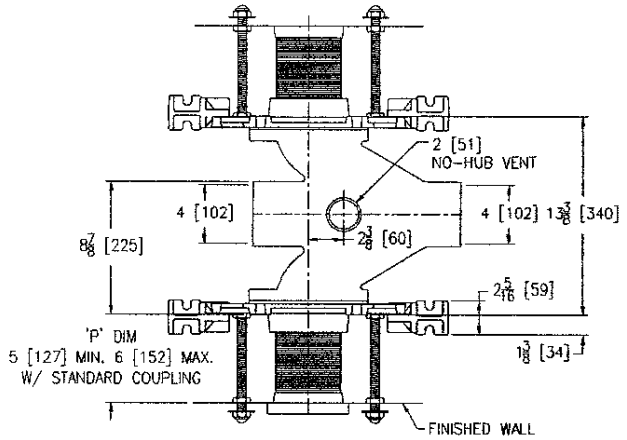

Product Number	Approx. Wt. Lbs. [kg]
Z1203-ND4	120[51]

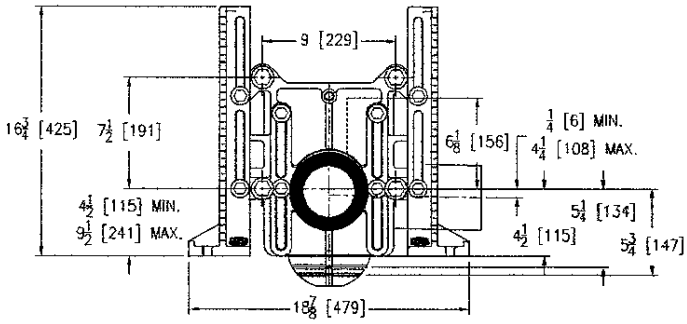

Note:

1. Min. 'P' Dim. Obtainable=2 [51]
2. Feet bolted to floor using min. 1/2 [13] dia. bolts and back slots on carrier feet.

ENGINEERING SPECIFICATION: ZURN Z1203-ND4
Adjustable, horizontal siphon jet water closet "Rigid System" with 4 [102] No-Hub connections. Complete with Dura-Coated cast iron fitting, with 2 [51] vent, adjustable gasketed face plates, universal floor mounted foot supports, corrosion resistant adjustable ABS couplings with integral test cap, fixture bolts, trim, stud protectors and bonded "Neo-Seal" gaskets.

OPTIONS (Check/specify appropriate options)

Z1203-ND4 4 [102] No-Hub Back to Back Inlet (Double)

PREFIXES

____Z D.C.C.I. System with Zurn "ZZ" Adjustable Coupling*
____ZQ D.C.C.I. System with Non-Adjustable Coupling

SUFFIXES

____-A Auxiliary Support Assembly (For P-Dim. Greater than 18 [457])
____-B Blowout Type Fixture Support
____-BC Back Cleanout
____-CC Corrosion Resistant Cast Iron Coupling (6 to 12 [152] to [305])
____-CL Coupling Length Greater than 12 [152] (Specify Length Required.)
____-F Floor Mount, Back Outlet Fixture Support
____-G Galvanized Cast Iron
____-JC 2 [51] Auxiliary Inlet with Sanitary Sweep on Faceplate Centerline (No-Hub only)
____-M Auxiliary Foot Support (For P-Dim. 10-18 [254-457])
____-T Threaded Connection (Available on Restricted Basis Only)
____-VP Vandal-Proof Trim
____-W Adapter for Women's Urinal
____-XB Bariatric 1000 lb [454 kg] Carrier
____-XH Extra-Heavy-Duty 750 lb [340 kg] Carrier
____-X3 3 [76] Foot Extension
____-X4 4 [102] Foot Extension
____-29 Mechanical Test Cap Assembly (Previously Z1210-29)
____-45 Finishing Frame for Siphon Jet System (For Blowout System Specify -45-B) (Previously Z1210-45)
____-50 Flush Valve Supply Support for W.C. (Previously Z1210-50)
____-61 "ZZ" Coupling Wrench

*REGULARLY FURNISHED UNLESS OTHERWISE SPECIFIED

REV. G	DATE: 9/25/08	C.N. NO. 99142
DWG. NO. 54354	PRODUCT NO. Z1203-ND4	

ZURN INDUSTRIES, LLC. ♦ SPECIFICATION DRAINAGE OPERATION ♦ 1801 Pittsburgh Ave. ♦ Erie, PA 16514
Phone: 814\455-0921 ♦ Fax: 814\454-7929 ♦ World Wide Web: www.zurn.com
In Canada: ZURN INDUSTRIES LIMITED ♦ 3544 Nashua Drive ♦ Mississauga, Ontario L4V1L2 ♦ Phone: 905\405-8272 Fax: 905\405-1292

Z1203-ND4

ADJUSTABLE HORIZONTAL BACK TO BACK SIPHON JET-NO HUB

SPECIFICATION SHEET

TAG _____

Dimensional Data (inches and [mm]) are Subject to Manufacturing Tolerances and Change Without Notice

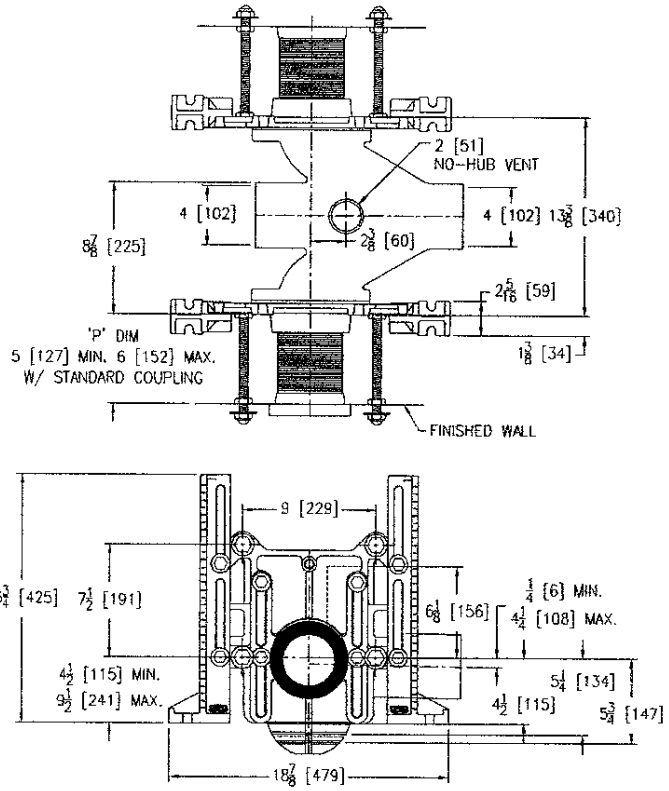

Product Number	Approx. Wt. Lbs. [kg]
Z1203-ND4	120[51]

Note:

1. Min. 'P' Dim. Obtainable=2 [51]
2. Feet bolted to floor using min. 1/2 [13] dia. bolts and back slots on carrier feet.

ENGINEERING SPECIFICATION: ZURN Z1203-ND4
Adjustable, horizontal siphon jet water closet "Rigid System" with 4 [102] No-Hub connections. Complete with Dura-Coated cast iron fitting, with 2 [51] vent, adjustable gasketed face plates, universal floor mounted foot supports, corrosion resistant adjustable ABS couplings with integral test cap, fixture bolts, trim, stud protectors and bonded "Neo-Seal" gaskets.

OPTIONS (Check/specify appropriate options)

Z1203-ND4 4 [102] No-Hub Back to Back Inlet (Double)

PREFIXES

____ Z D.C.C.I. System with Zurn "ZZ" Adjustable Coupling*
____ ZQ D.C.C.I. System with Non-Adjustable Coupling

SUFFIXES

____ -A Auxiliary Support Assembly (For P-Dim. Greater than 18 [457])
____ -B Blowout Type Fixture Support
____ -BC Back Cleanout
____ -CC Corrosion Resistant Cast Iron Coupling (6 to 12 [152] to [305])
____ -CL Coupling Length Greater than 12 [152] (Specify Length Required.)
____ -F Floor Mount, Back Outlet Fixture Support
____ -G Galvanized Cast Iron
____ -JC 2 [51] Auxiliary Inlet with Sanitary Sweep on Faceplate Centerline (No-Hub only)
____ -M Auxiliary Foot Support (For P-Dim. 10-18 [254-457])
____ -T Threaded Connection (Available on Restricted Basis Only)
____ -VP Vandal-Proof Trim
____ -W Adapter for Women's Urinal
____ -XB Bariatric 1000 lb [454 kg] Carrier
____ -XH Extra-Heavy-Duty 750 lb [340 kg] Carrier
____ -X3 3 [76] Foot Extension
____ -X4 4 [102] Foot Extension
____ -29 Mechanical Test Cap Assembly (Previously Z1210-29)
____ -45 Finishing Frame for Siphon Jet System (For Blowout System Specify -45-B) (Previously Z1210-45)
____ -50 Flush Valve Supply Support for W.C. (Previously Z1210-50)
____ -61 "ZZ" Coupling Wrench

*REGULARLY FURNISHED UNLESS OTHERWISE SPECIFIED

REV. G	DATE: 9/25/08	C.N. NO. 99142
DWG. NO. 54354	PRODUCT NO. Z1203-ND4	

ZURN INDUSTRIES, LLC. ♦ SPECIFICATION DRAINAGE OPERATION ♦ 1801 Pittsburgh Ave. ♦ Erie, PA 16514
Phone: 814\455-0921 ♦ Fax: 814\454-7929 ♦ World Wide Web: www.zurn.com
In Canada: ZURN INDUSTRIES LIMITED ♦ 3544 Nashua Drive ♦ Mississauga, Ontario L4V1L2 ♦ Phone: 905\405-8272 Fax: 905\405-1292

Z5615-BWL

HET Elongated Wall Hung EcoVantage® Flush Valve Toilet System

TAG _____

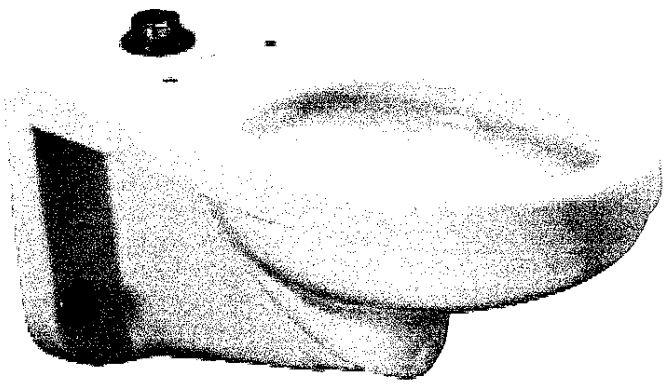

Z5615 Series Elongated

Recommended Carrier:

☐ Z1201 or Z1202 EZCarry™ 500 lbs load rated High Efficiency Carrier

Recommended Trim:

☐ Z5955SS-EL Elongated, standard white, open front less cover with stainless steel check hinge.

Option:

☐ -RF Retro-Fit Nut Kit for extending carrier studs from existing wall.

Note: To ensure system performance: Minimum Running Pressure = 25 PSI

These dimensions and specifications are subject to change without notice.

Fixture dimensions meet ANSI/ASME standard A112.19.2 and CAN/CSA B45 requirements.
Meets the American Disabilities Guidelines and ANSI A117.1 requirements when installed according to these requirements.

ZURN INDUSTRIES, LLC. ♦ COMMERCIAL BRASS OPERATION
5900 ELWIN BUCHANAN DRIVE ♦ SANFORD NC 27330
PHONE: 1-800-997-3876 ♦ FAX: 919-775-3541
WWW.ZURN.COM
IN CANADA: ZURN INDUSTRIES LIMITED
3544 NASHUA DRIVE ♦ MISSISSAUGA, ONTARIO L4V1L2
PHONE: 905-405-8272 FAX: 905-405-1292

Z5615 HET Series

- Zurn High Efficiency Toilets and paired performance flush valve systems are designed to exceed industry standards, while using as little as 1.1 gallons of water per flush.
- Universal high efficiency toilet can be specified with 1.1 gpf [4.2Lpf], 1.28 gpf [4.8Lpf], 1.6 gpf [6.0 Lpf] or dual flush valves.
- Vitreous china
- Elongated front rim
- 2-1/8" fully glazed trapway
- High efficiency siphon jet flush action
- Shipping Weight: 40 lbs.
- System MaP score of 1,000 grams at 1.28 gpf with Zurn Flush Valve
- Static weight load of 1,000 lbs*

Engineering Specification

☐Z5615-BWL

EcoVantage High Efficiency Toilet System

- Vitreous China, 1.1 gpf [4.2 Lpf] or greater high efficiency wall hung toilet with siphon jet flushing action and elongated front rim with 1-1/2" top spud. Universal high efficiency toilet is designed to exceed industry standards with flush volumes of 1.1 gallons per flush or higher.

Replaces Zurn Z5610

☐Z5616-BWL

EcoVantage High Efficiency Toilet System

- Vitreous China, 1.1 gpf [4.2 Lpf] or greater high efficiency wall hung toilet with siphon jet flushing action and elongated front rim with integral bedpan lugs, antimicrobial ceramic glaze, and 1-1/2" top spud. Universal high efficiency toilet is designed to exceed industry standards with flush volumes of 1.1 gallons per flush or higher.

Replaces Zurn Z5611

Architectural/Engineering Approval

*Not inteded for bariatric use

See Zurn One Systems for suggested packages.

EcoVantage® is a registered trademark of Zurn Industries

Z5615-BWL

HET Elongated Wall Hung EcoVantage® Flush Valve Toilet System

TAG _____

Rough-in dimensions for Z5615 Series

- Z5615-BWL with top spud, shown with Z6000AV manual valve

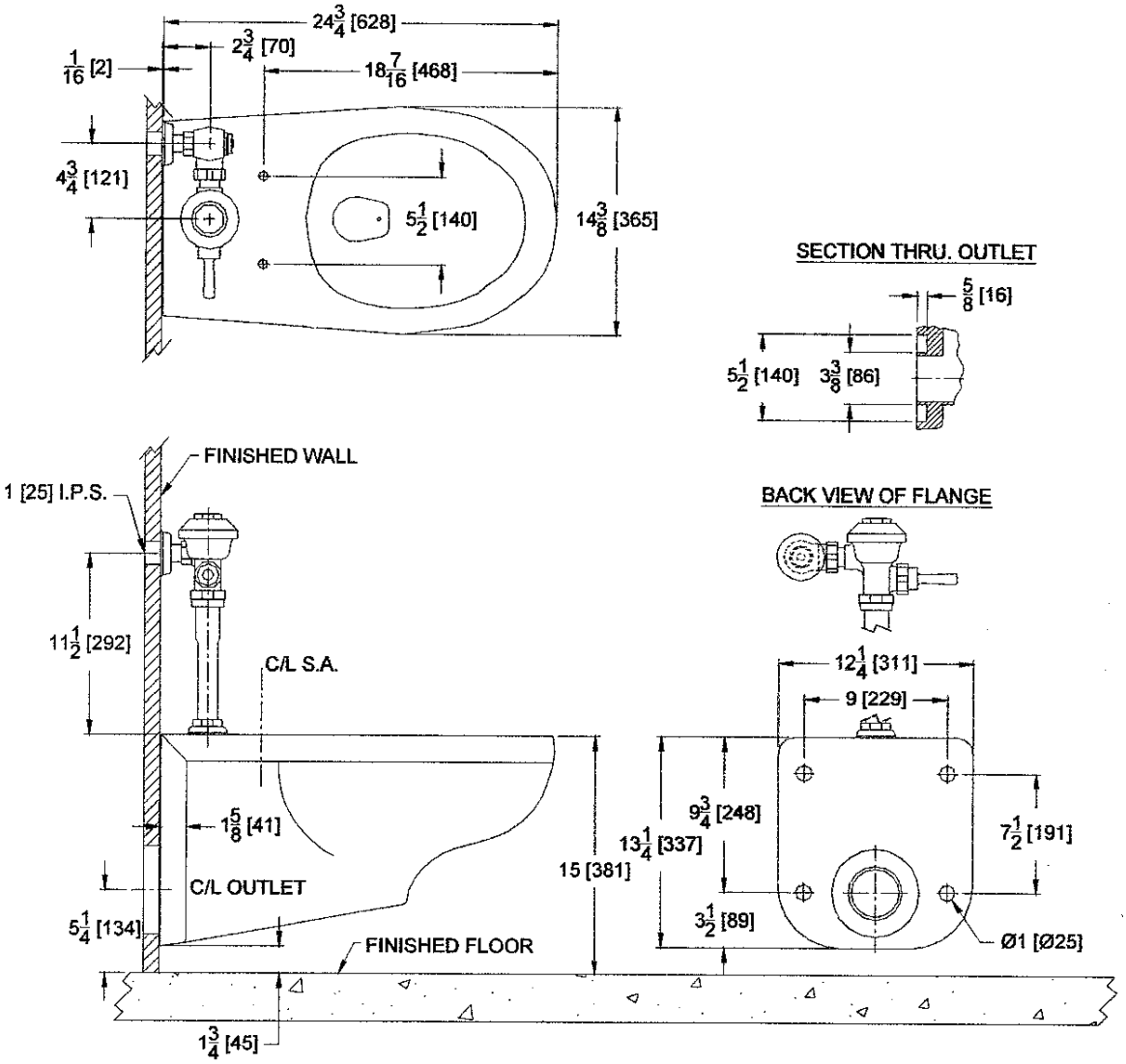

These dimensions and specifications are subject to change without notice.

Fixture dimensions meet ANSI/ASME standard A112.19.2 and CAN/CSA B45 requirements.

Note: For ADA compliance, rim height should be installed 17" from finished floor.

Meets the American Disabilities Guidelines and ANSI A117.1 requirements when installed according to these requirements.

ZURN INDUSTRIES, LLC. ♦ COMMERCIAL BRASS OPERATION
5900 ELWIN BUCHANAN DRIVE ♦ SANFORD NC 27330
PHONE: 1-800-997-3876 ♦ FAX: 919-775-3541
WWW.ZURN.COM
IN CANADA: ZURN INDUSTRIES LIMITED
3544 NASHUA DRIVE ♦ MISSISSAUGA, ONTARIO L4V1L2
PHONE: 905-405-8272 FAX: 905-405-1292

EcoVantage® is a registered trademark of Zurn Industries

Rev. D
Dwg. No. 84322

Date: 4/1/2015
Product No. Z5615-BWL

AquaVantage® AV Model

TAG _____

Exposed Z6000AV Model

For Water Closets

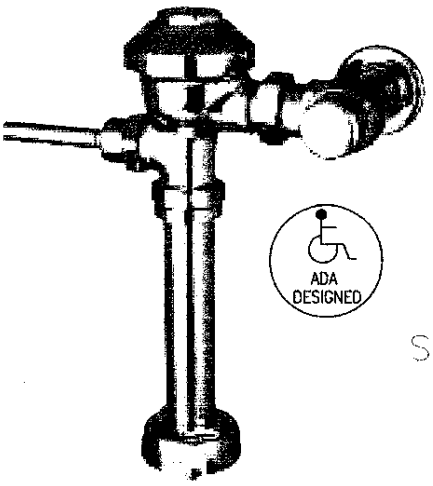

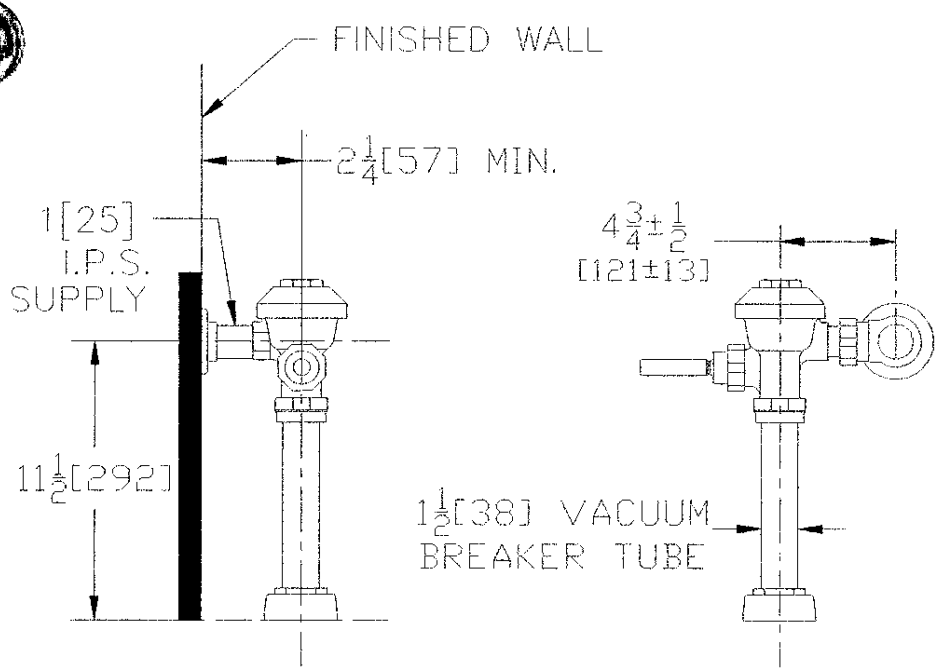

Flow Options

☐	**-WS1**	1.6 Gal. Low Consumption Flush
☐	**-FF**	4.5 Gal. Full Flush
☐	**Standard Flush**	3.5 Gallons Per Flush

Suffix Options (Check/Specify Appropriate Options)

_____	**-BG**	BioCare Handle
_____	**-H**	Handle on Front of Flush Valve
_____	**-L**	1" [25] Metal Push Button
_____	**-L3**	3" [76] Metal Push Button
_____	**-YJ**	Split Ring Pipe Support
_____	**-YK**	Solid Ring Pipe Support
_____	**-YO**	Bumper on Angle Stop
_____		Other

ENGINEERING SPECIFICATION: ZURN Z6000AV AquaVantage® 'AV' Exposed Closet Flush Valve - Exposed, quiet diaphragm-type, chrome plated flushometer valve with a polished exterior. Complete with Zurn's AquaVantage® TPE, chloramine resistant, dual seal diaphragm with a clog resistant, triple filtered by-pass. The valve is ADA compliant with a non-hold open and no leak handle feature, high back pressure vacuum breaker, one piece hex coupling nut, adjustable tailpiece, spud coupling and flange for top spud connection. Control stop has internal siphon-guard protection, vandal resistant stop cap, sweat solder kit, and a cast wall flange with set screw. Internal seals are made of chloramine resistant materials.

This space is for Architectural/engineering Approval

ZURN INDUSTRIES, INC. ♦ COMMERCIAL BRASS OPERATION ♦ 5900 ELWIN BUCHANAN DRIVE ♦ SANFORD NC 27330
Phone: 1-800-997-3876 ♦ Fax: 919-775-3541 ♦ World Wide Web: www.zurn.com
In Canada: ZURN INDUSTRIES LIMITED ♦ 3544 Nashua Drive ♦ Mississauga, Ontario L4V1L2 ♦ Phone: 905-405-8272 Fax: 905-405-1292

AquaVantage® is a registered trademark of Zurn Industries, Inc.

Rev. D
Dwg. No. 63276
Date: 4/28/03
Product No. Z6000AV

Conservation Warehouse International
PO Box 1376 • Easton, PA 18044
Phone: 800-875-2955 Fax: 484-944-1590
www.conservationwarehouse.com

WAREHOUSE

Z5798 "The Pint ™"0.125 gpf Top Spud Ultra Low Consumption Urinal System

Z5798 Series – "The Pint™ "

- Zurn One ultra low consumption urinal system designed for optimal performance between Zurn fixture and Zurn flush valve to save water while exceeding industry performance standards.
- 1/8 gpf [0.5 Lpf]
- Over 85% water savings over standard 1.0 gpf [4.0 Lpf] system
- Pressure compensating internal flow regulator
- Oversized footprint to make retrofit easy
- Vitreous china
- High efficiency washout flushing action
- 3/4" top spud
- 2" I.P.S. outlet flange and rubber gasket with integral trap
- 14" extended rim height for handicap compliance when installed at proper height
- Shipping Weight: 72 lbs.

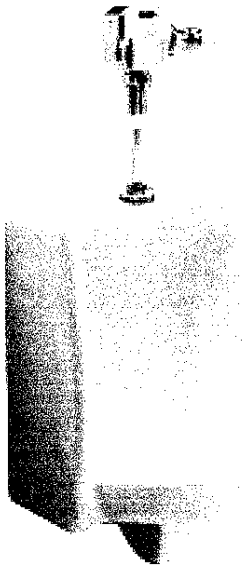

Z5798 Series 1/8 gpf "The Pint" EcoVantage™ flush valve urinal system.

Engineering Specification

☐ **Z5798.205.00 EcoVantage™ High Efficiency Battery-Powered Sensor Urinal System**
System comes complete with sensor-operated, battery-powered exposed ZEG6003EV high efficiency flushometer valve, control stop assembly, and vitreous china urinal. The system is designed to perform to industry standards with as little as 1/8 gallon per flush. Valve is operated by an infrared convergence-type proximity sensor with smart technology, powered by 4"AA" batteries. Valve features an internal flow regulator to maintain constant flow rates independent of line pressures. Vitreous china urinal is supplied with 3/4" top spud, 2" outlet connection, and strainer assembly.

☐ **Z5798.206.00 EcoVantage™ High Efficiency Hardwired Sensor Urinal System**
System comes complete with sensor-operated, hardwired exposed ZEG6003EV-HW high efficiency flushometervalve, control stop assembly, and vitreous china urinal. The system is designed to perform to industry standards with as little as 1/8gallon per flush. Valve is operatedby an infrared convergence-type proximity sensor with smart technology, powered by 6VDC plug-in or hardwired power converter. Valve features an internal flow regulator to maintain constant flow rates independent of line pressures. Vitreous china urinal is supplied with 3/4" top spud, 2" outlet connection, and strainer assembly.

Suffix Options

☐ **UB** Universal retrofit mounting bracket. Time saving urinal mounting bracket allows the urinal to be mounted to existing carrier studs and outlet piping without the need to make any adjustments behind the wall in most applications.

See Zurn One Systems for sug[illegible] ECO VANTAGE

This Space is for Architectural/Engineering Approval

Conservation Warehouse International
PO Box 1376 • Easton, PA 18044
Phone: 800-875-2955 Fax: 484-944-1590
www.conservationwarehouse.com

WAREHOUSE

Rough-in dimensions for Z5798 Series
*Z5798 with top spud

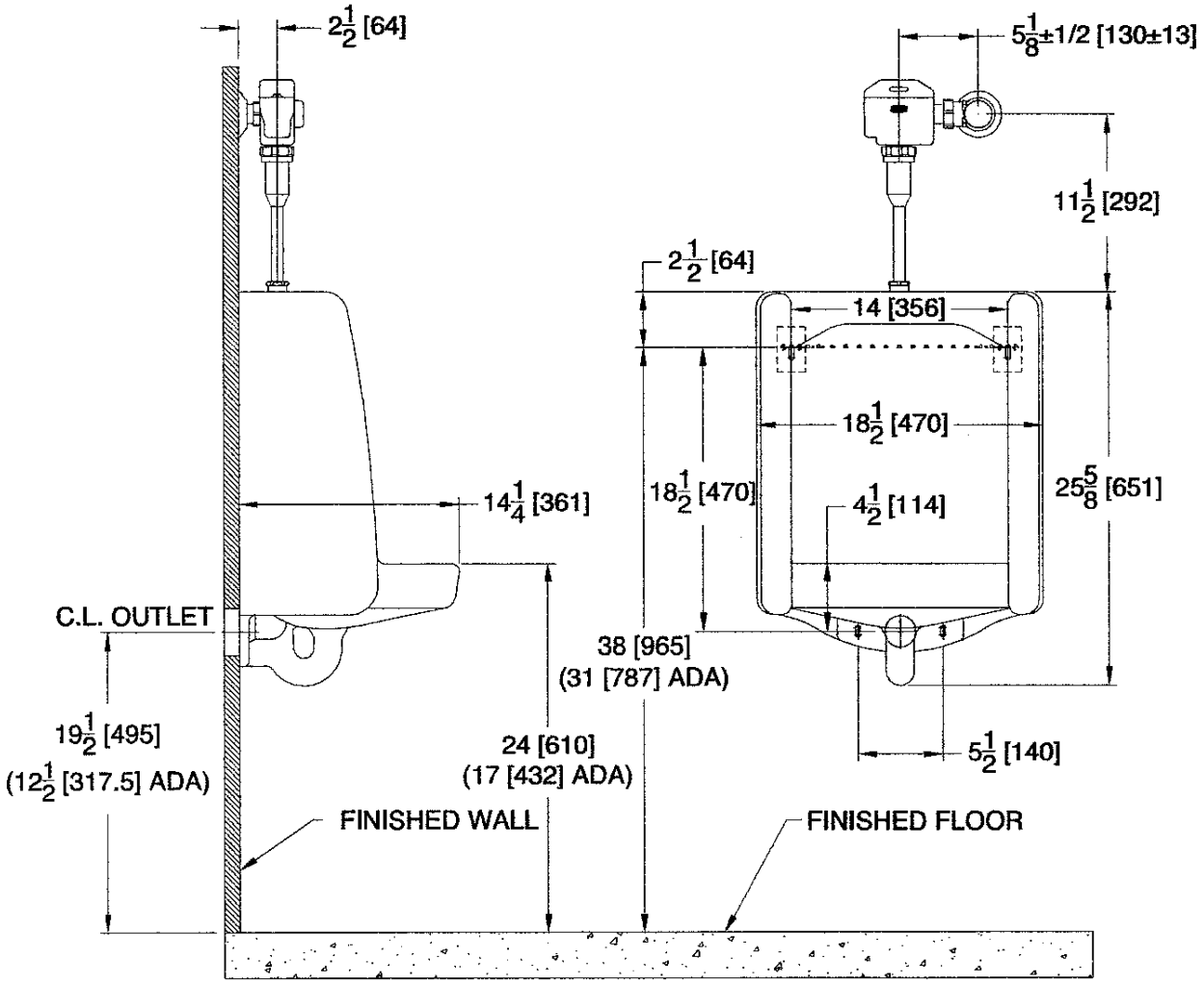

These dimensions and specifications are subject to change without notice.

Fixture dimensions meet ANSI/ASME standard A112.19.2-2003 and CAN/CSA B45 requirements.

Meets the American Disabilities Guidelines and ANSI A117.1 requirements when urinal is installed 17" [432 mm] from finished floor.

GreenSpec® LISTED
www.GreenSpec.com

Z5830

TAG _____

19" x 17" Wall Hung Lavatory
Cast Iron Lavatory

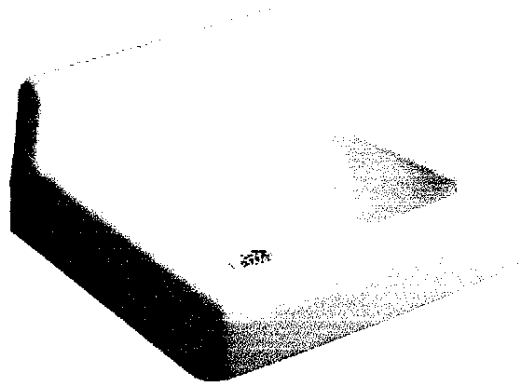

Z5830 Series

Z5830 Series

- 19" [483 mm] x 17" [432 mm]
- Enameled cast iron
- Faucet holes for 4" or 8" centers
- Wall hung lavatory provided with wall hanger or for use with exposed arm carrier systems.
- Waste: 1-1/4" O.D.
- Depth: 6-3/4"
- Shipping Weight: 61lbs.

Engineering Specification:

☐ **Z5831** 19" x 17" enameled cast iron wall hung lavatory. Provided with single faucet hole.*

☐ **Z5834** 19" x 17" enameled cast iron wall hung lavatory. Provided with 4" center faucet holes.*

☐ **Z5838** 19" x 17" enameled cast iron wall hung lavatory. Provided with 8" center faucet holes.*

**For use with wall hanger plate or exposed arm carrier.*

Suffix Options:

☐ **-CB** Heavy Duty Cast Ductile Iron Mounting Bracket

Recommended Trim:

☐ **Z8743-PC** Grid Strainer

☐ **Z8700** Series P-Trap

☐ **Z8800** Series Top with Flexible Supplies

☐ **Z8946-1-NT** ADA Trap, Stop, and Supply Protectors

Optional Trim:

☐ **Z8746-PC** ADA Grid Strainer

☐ **Z8946-3-NT** ADA Trap, Stop, and Supply Protectors for Offset Grid Strainers

These dimensions and specifications are subject to change without notice.

Fixture dimensions meet ANSI/ASME standard A112.19.2 and CAN/CSA B45 requirements.

Meets the American Disabilities Guidelines and ANSI A117.1 requirements when lavatory is installed 34" [864mm] from finished floor.

Architectural/Engineering Approval

See Zurn One Systems for suggested packages.

ZURN INDUSTRIES, LLC. ♦ COMMERCIAL BRASS OPERATION
5900 ELWIN BUCHANAN DRIVE ♦ SANFORD NC 27330
Phone: 1-800-997-3876 ♦ Fax: 919-775-3541
www.zurn.com
In Canada: ZURN INDUSTRIES LIMITED
3544 Nashua Drive ♦ Mississauga, Ontario L4V1L2
Phone: 905-405-8272 Fax: 905-405-1292

The information contained in this document is subject to change without notice.
Please contact Zurn for most up to date information.

Z5830

TAG _____

19" x 17" Wall Hung Lavatory
Cast Iron Lavatory Rough-In

Rough-in dimensions for Z5830Series

- Z5831 with single faucet hole
- Z5834 with 4" center faucet holes
- Z5838 with 8" center faucet holes

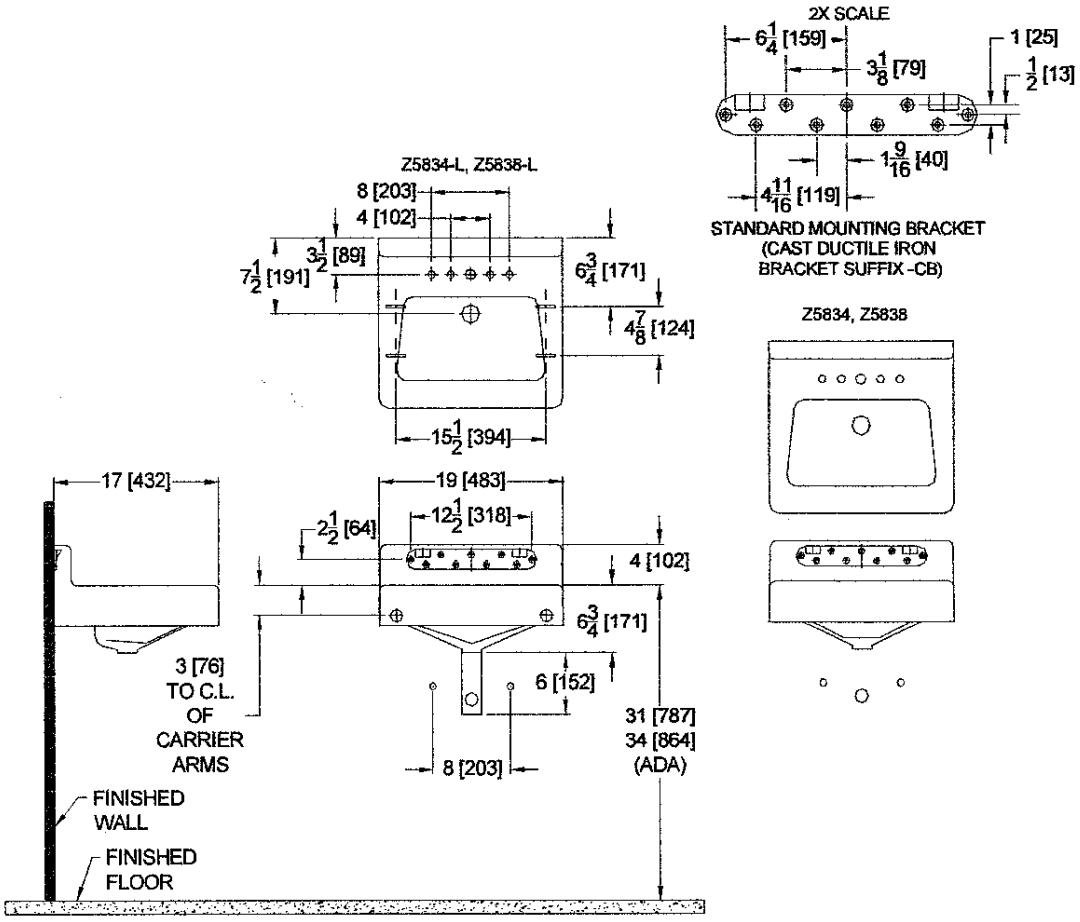

These dimensions and specifications are subject to change without notice.

Fixture dimensions meet ANSI/ASME standard A112.19.2 and CAN/CSA B45 requirements.

Meets the American Disabilities Guidelines and ANSI A117.1 requirements when lavatory is installed 34" [864mm] from finished floor.

Note: See Zurn Z1231-AL rough-in sheet.

ZURN INDUSTRIES, LLC. ♦ COMMERCIAL BRASS OPERATION
5900 ELWIN BUCHANAN DRIVE ♦ SANFORD NC 27330
Phone: 1-800-997-3876 ♦ Fax: 919-775-3541
www.zurn.com
In Canada: ZURN INDUSTRIES LIMITED
3544 Nashua Drive ♦ Mississauga, Ontario L4V1L2
Phone: 905-405-8272 Fax: 905-405-1292

4" CENTERSET

Z81101-XL

TAG _____

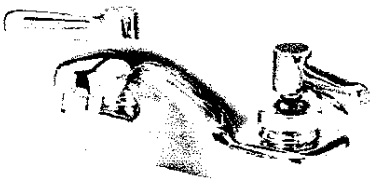

Engineering Specification: Zurn AquaSpec® Z81101-XL
Polished chrome-plated cast brass faucet body with integral shanks, quarter turn ceramic disc cartridges and a 4" [102mm] long integral cast spout. Unit is furnished with a 2.2 GPM [8.3 L] pressure compensating aerator (complying with ANSI A112.18.1 Standard for flow), 2-1/2" [64mm] vandal-resistant color-coded metal lever handles, mounting hardware and 1/2" NPSM coupling nuts for standard lavatory risers.

Zurn Lead Compliant* "XL" products are a line of durable, high quality brass faucets and fixtures that are designed and manufactured to comply with state laws and local codes that mandate lead content levels. Zurn "XL" products are manufactured with *not more than 0.25% lead content when used with respect to wetted surfaces of pipes and pipe fittings, plumbing fitting and fixtures: California Health & Safety Code § 116875; Vermont 9 VCA § 2470h.

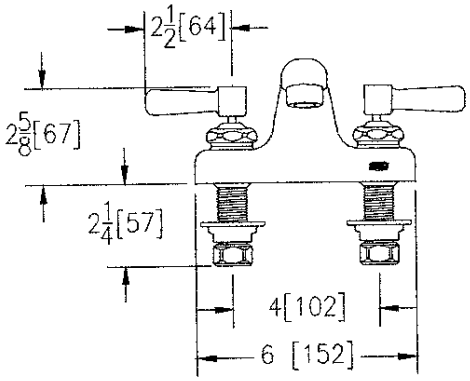

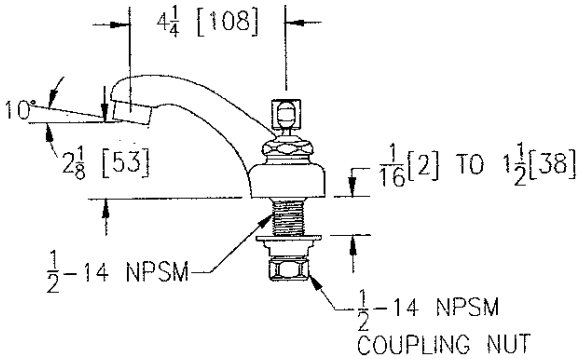

Note: *All dimensions are for reference only. Do not use for pre-plumbing*

ADA DESIGNED

OPTIONAL ACCESSORIES

Suffix	Description
__ -G	1-1/4" [32mm] Grid Strainer Drain
__ -HCT	Hot/Cold Text Indexes
__ -PT	1-1/4" [32mm] Cast Brass P-Trap with a 7-1/2" [191mm] Long 17-Gauge Wall Bend
__ -2M	2.2 GPM [8.3 L] Vandal-Resistant Pressure Compensating Male Aerator
__ -3M	0.5 GPM [1.9 L] Vandal-Resistant Pressure Compensating Male Aerator
__ -4M	2.2 GPM [8.3 L] Vandal-Resistant Pressure Compensating Male Laminar Flow
__ -7M	1.0 GPM [3.8 L] Pressure Compensating Male Spray Outlet
__ -16M	1.0 GPM [3.8 L] Vandal-Resistant Pressure Compensating Male Spray Outlet
__ -17M	1.5 GPM [5.7 L] Vandal-Resistant Pressure Compensating Male Aerator
__ -18M	1.5 GPM [5.7 L] Vandal-Resistant Pressure Compensating Male Laminar Flow
__ -19F	1.5 GPM [5.7 L] Anti-Microbial Pressure Compensating Female Laminar Flow Outlet
__ -21F	1.0 GPM [3.8L] Pressure Compensating Female Laminar Flow Outlet
__ -22F	1.0 GPM [3.8L] Vandal-Resistant Pressure Compensating Female Laminar Flow Outlet
__ -23F	1.5 GPM [5.7L] Pressure Compensating Female Aerator
__ -24M	0.35 GPM [1.3 L] Pressure Compensating Male Spray Outlet
__ -25M	0.35 GPM [1.3 L] Vandal-Resistant Pressure Compensating Male Spray Outlet

ZURN INDUSTRIES, LLC ♦ COMMERCIAL BRASS OPERATION ♦ 2640 SOUTH WORK STREET ♦ FALCONER NY 14733
Phone: 1-800-997-3876 ♦ Fax: 1-919-775-3541 ♦ www.zurn.com
In Canada: ZURN INDUSTRIES LIMITED ♦ 3544 Nashua Drive ♦ Mississauga, Ontario L4V1L2 ♦ Phone: 905/405-8272 Fax: 905/405-1292

Rev. B Date: 3/28/11 C.N. No. 127535
Dwg. No. 92991 Product No. Z81101-XL

AquaSpec® is a registered trademark of Zurn Industries, LLC
©2009 Zurn Industries, LLC

P-TRAP WITH WALL BEND, OFFSET STRAINER AND PROTECTORS

Z8995-3-PC

TAG _____

Engineering Specification: Zurn Z8995-3-PC – Chrome-plated cast body 1 1/4" [32mm] P-trap with cleanout, 17 gage tubular wall bend, brass nuts, and shallow escutcheon with compression inlet. Unit is furnished with brass offset lavatory strainer, one trap protector, one offset drain protector, and two supply stop protectors. Protectors are satin white PVC resin, antimicrobial, resist thermal transfer and are ADA compliant.

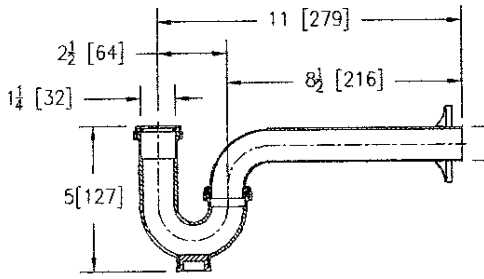

P-TRAP

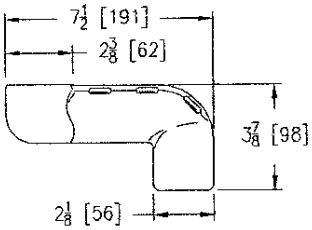

OFFSET DRAIN PROTECTOR

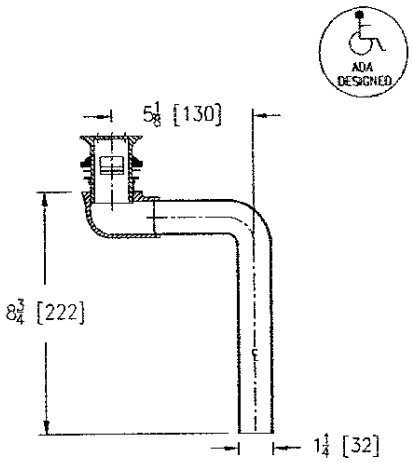

OFFSET LAVATORY STRAINER

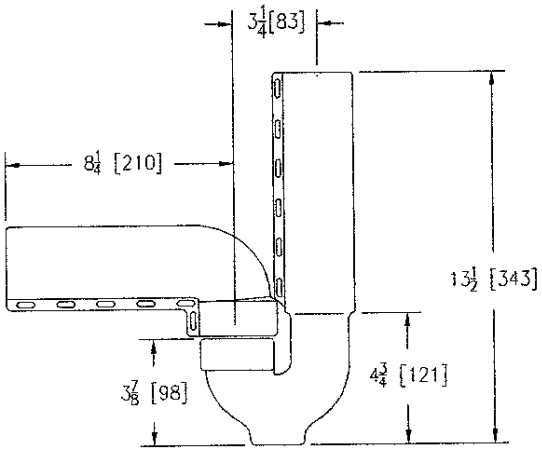

TRAP PROTECTOR

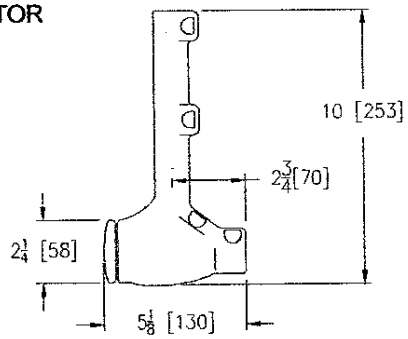

SUPPLY STOP PROTECTOR

OPTIONAL ACCESSORIES

Suffix		Description
____	-BX	Box Escutcheon
____	-CE	Cast Brass Escutcheon with Setscrew
____	-D	Deep Escutcheon
____	-J	Metal to Metal Ground Joint Connection

*CSA APPROVED ONLY WHEN ORDERING WITH BRASS NUTS

ZURN INDUSTRIES, INC. ♦ COMMERCIAL BRASS OPERATION ♦ 2640 SOUTH WORK STREET ♦ FALCONER NY 14733
Phone: 1-716-665-1132 ♦ Fax: 1-716-665-1135 ♦ World Wide Web: www.zurn.com
In Canada: ZURN INDUSTRIES LIMITED ♦ 3544 Nashua Drive ♦ Mississauga, Ontario L4V1L2 ♦ Phone: 905/405-8272 Fax: 905/405-1292

AquaSpec® is a registered trademark of Zurn Industries, Inc.
©2006 Zurn Industries, Inc.

Rev. B Date: 12/5/06 C.N. No. 105415
Dwg. No. 80305 Product No. Z8995-3-PC

BOBRICK

Technical Data

ClassicSeries® SURFACE-MOUNTED SOAP DISPENSER

B-2112

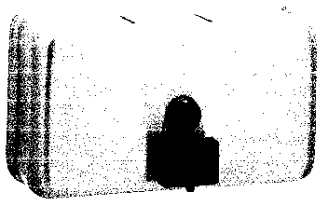

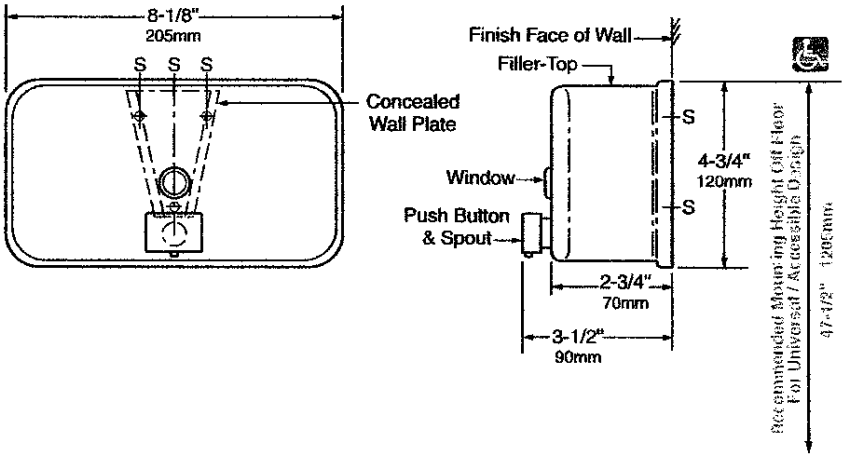

MATERIALS:

Container — 18-8, type-304, 22-gauge (0.8mm) stainless steel with satin-finish. Body is drawn, one-piece, seamless construction. Back plate has mounting bracket attached. Furnished with concealed wall plate. Equipped with a clear acrylic soap refill-indicator window and a locked, hinged stainless steel lid for top filling. Capacity: 40-fl oz (1.2-L).

Valve — Black molded plastic push button and spout. Soap head-holding mushroom valve. Stainless steel spring. U-packing seal and duckbill. Antibacterial-soap-resistant plastic cylinder.

OPERATION:

Corrosion-resistant valve dispenses commercially marketed all-purpose hand soaps. To prevent corrosion of the tank, use only chloride-free pH-neutral liquid soaps. Valve is operable with one hand, without tight grasping, pinching, or twisting of the wrist, and with less than 5 pounds of force (22.2 N) to comply with barrier-free accessibility guidelines (including ADAAG in U.S.A.). Window indicates when refill is required. The locked, hinged lid opens for top filling only with special key provided. Concealed, vandal-resistant mounting.

INSTALLATION:

Secure wall plate to the wall with three sheet-metal screws, furnished by manufacturer, at points indicated by an *S*. Slide mounting bracket of container down onto wall plate and secure unit with furnished locking-screw. For plaster or dry wall construction, provide concealed backing to comply with local building codes and secure with sheet-metal screws furnished. For other wall surfaces, provide fiber plugs or expansion shields for use with sheet-metal screws furnished, or provide 1/8" (3mm) toggle bolts or expansion bolts.

Note: Surface-mount the dispenser plumb and true with valve 6" (150mm) to right or left of lavatory center. Provide 4" (100mm) minimum clearance from the lid to the underside of any horizontal projection. Push buttons should be located 44" (1120mm) maximum above the finish floor.

SPECIFICATION:

Surface-mounted soap dispenser shall be type-304 stainless steel with satin-finish. Corrosion-resistant valve shall dispense commercially marketed all-purpose hand soaps. To prevent corrosion of the tank, use only chloride-free pH-neutral liquid soaps. Valve shall be operable with one hand and with less than 5 pounds of force (22.2 N) to comply with barrier-free accessibility guidelines (including ADAAG in U.S.A.). Container shall be equipped with a clear acrylic soap refill-indicator window; a locked, hinged stainless steel lid for top filling; and shall have a capacity of 40-fl oz (1.2-L). Unit shall have concealed, vandal-resistant mounting.

Surface-Mounted Soap Dispenser shall be Model B-2112 of Bobrick Washroom Equipment, Inc., Clifton Park, New York; Jackson, Tennessee; Los Angeles, California; Bobrick Washroom Equipment Company, Scarborough, Ontario; Bobrick Washroom Equipment Pty. Ltd., Australia; and Bobrick Washroom Equipment Limited, United Kingdom.

The illustrations and descriptions herein are applicable to production as of the date of this Technical Data Sheet.
The manufacturer reserves the right to, and does from time to time, make changes and improvements in designs and dimensions.

Revised 4/27/11 Printed in U.S.A.
© 2011 by Bobrick Washroom Equipment, Inc.

SECTION 10155
TOILET COMPARTMENTS

Display hidden notes to specifier. (Don't know how? Click Here)

Copyright 2014 - 2015 ARCAT, Inc. - All rights reserved

PART 1 GENERAL

1.1 SECTION INCLUDES

A. Solid Color Reinforced Composite (SCRC) Substrate: (Bobrick SierraSeries).
   1. Toilet partitions.
   2. Urinal privacy screens.

1.2 RELATED SECTIONS

A. Section 05500 - Metal Fabrications, coordination with overhead supports; steel beams above finished ceiling to secure ceiling hung and floor-to-ceiling stiles.

B. Section 06100 - Rough Carpentry, coordination with blocking in walls to secure panels, wall posts and stiles.

C. Section 09200 - Plaster and Gypsum Board, coordination with blocking.

D. Section 09310 - Tiling, coordination with layout and installation.

E. Section 09510 - Ceilings, coordination with layout and installation.

F. Section 10810 - Washroom Accessories, for accessories.

G. Section 10810 - Baby Changing Stations, for baby changing stations.

1.3 SUBMITTALS

A. Submit under provisions of Section 01300.

B. Product Data: Manufacturer's data sheets on each product to be used, including:
   1. Preparation instructions and recommendations.
   2. Storage and handling requirements and recommendations.
   3. Installation methods.

C. USGBC LEED Submittals:
   1. For Bobrick ClassicSeries, DesignerSeries and DuraLineSeries: Materials and Resource Credits MR4.1 and MR4.2 - Recycled Content; submit manufacturer's calculation of value of recycled content for specified products, calculated in accordance with USGBC LEED certification requirements.
   2. For Bobrick ClassicSeries, DesignerSeries and TrimLineSeries: Materials and Resource Credit MR6 - Rapidly Renewable Materials; submit manufacturers certification that products contain raw materials that are derived from plants that are harvested within a 10 year cycle or shorter.
   3. For Bobrick SierraSeries: Indoor Environmental Quality Credit IEQ 4 - No Added Urea Formaldehyde; submit manufacturer's certification that composite and agrifiber products contain no added urea-formaldehyde resins and that laminating used to fabricate on-site and shop-applied composite wood and agrifiber contain no added

urea-formaldehyde resins.

4. For Bobrick SierraSeries: Indoor Environmental Quality Credit IEQ 4 for Schools; submit manufacturer's certification that products comply with the testing and product requirements of the California Department of Health Services' "Standard Practice for the Testing of Volatile Organic Emissions from Various Sources Using Small-Scale Environmental Chambers."

D. USA Certificate of Origin: Manufacturer shall supply with first submittal, an example of their Certificate of Origin declaring toilet compartments are wholly manufactured and assembled specifically in the United States, including city and state locations. A notarized Certificate of Origin shall be provided with closeout documents.

E. Shop Drawings: Submit manufacturer's shop drawings for each product specified, including the following:
   1. Plans, elevations, details of construction and attachment to adjacent construction.
   2. Show anchorage locations and accessory items.
   3. Verify dimensions with field measurements prior to final production of toilet compartments.

F. Selection Samples: For each finish product specified, two complete sets of color chips representing manufacturer's full range of available colors and patterns.

G. Verification Samples: For each finish product specified, two samples, minimum size 6 inches (150 mm) square representing actual product, color, and patterns.

1.4 QUALITY ASSURANCE

A. Manufacturer Qualifications: Minimum 10 year experience manufacturing similar products.

B. Installer Qualifications: Minimum 2 year experience installing similar products.

C. Single Source Requirements: To the greatest extent possible provide products from a single manufacturer.

D. Accessibility Requirements: Comply with requirements applicable in the jurisdiction of the project, including but not limited to ADA and ICC/ANSI A117.1 requirements as applicable.

E. Mock-Up: Provide a mock-up for evaluation of surface preparation techniques and application workmanship.
   1. Finish areas designated by Architect.
   2. Do not proceed with remaining work until workmanship is approved by Architect.
   3. Refinish mock-up area as required to produce acceptable work.

1.5 PRE-INSTALLATION MEETINGS

A. Convene minimum two weeks prior to starting work of this section.

1.6 DELIVERY, STORAGE, AND HANDLING

A. Deliver and store products in manufacturer's unopened packaging bearing the brand name and manufacturer's identification until ready for installation.

B. Handling: Handle materials to avoid damage.

1.7 PROJECT CONDITIONS

A. Maintain environmental conditions (temperature, humidity, and ventilation) within limits recommended by manufacturer for optimum results. Do not install products under

environmental conditions outside manufacturer's recommended limits.

1.8 SEQUENCING

A. Ensure that products of this section are supplied to affected trades in time to prevent interruption of construction progress.

1.9 WARRANTY

A. Manufacturer's Warranty (SierraSeries and DuraLineSeries): Manufacturer's standard 25 year limited warranty for panels, doors, and stiles against breakage, corrosion, delamination, and defects in factory workmanship. Manufacturer's standard 1 year guarantee against defects in material and workmanship for stainless steel door hardware and mounting brackets.

PART 2 PRODUCTS

2.1 MANUFACTURERS

A. Acceptable Manufacturer: Bobrick Washroom Equipment, Inc., which is located at: 6901 Tujunga Ave.; North Hollywood, CA 91605-5882; Tel: 818-764-1000; Fax: 818-765-2700; Email:info@bobrick.com; Web:www.bobrick.com

B. Basis of Design Products: Based on the quality and performance requirements of the project, specifications are based solely on the products of Bobrick Washroom Equipment, Inc. www.bobrick.com. Location of manufacturing shall be the United States.

C. Substitutions: The Architect will consider products of comparable manufacturers as a substitution, pending the Contractor's submission of adequate documentation of the substitution in accordance with procedures in Division 1 of the Project Manual. Documentation shall include a list of five similar projects of equivalent size where products have been installed for a minimum of two years, and manufacturer's certification that products are fabricated in the United States.

D. Requests for substitutions will be considered in accordance with provisions of Section 01600.

2.2 SOLID COLOR REINFORCED COMPOSITE (SCRC) SUBSTRATE (SierraSeries)

A. Solid Color Reinforced Composite (SCRC) Toilet Partitions: Bobrick SierraSeries.
   1. Design Type:
      a. Standard Height.
         1) Door/Panel Height: 58 inches (147 cm).
         2) Floor Clearance: 12 inches (30 cm).
   2. Privacy Style Partitions: No sightlines with gap-free interlocking doors and stiles routed 0.300 inches (7.6 mm) from the edge to allow for 0.175 inch (4.4 mm) overlap to prevent line-of-sight into the toilet compartment. Privacy strips fastened or adhered onto the partition material are not acceptable.
   3. Mounting:
      a. Floor-mounted, overhead-braced with satin finish, extruded anodized aluminum headrails, 0.065 inch (1.65 mm) thick with anti-grip profile.
         1) Stile Maximum Height: 83 inches (211 cm).

B. Solid Color Reinforced Composite (SCRC) Urinal Screens: Bobrick SierraSeries.
   1. Mounting Configuration:
      a. Wall-hung.
         1) Screen Height: 48 inches (122 cm) with 12 inches (30 cm) floor clearance.

C. Materials: Solid color reinforced composite (SCRC) material for stiles, panels, doors, and screens with Bobrick GraffitiOff coating, thermoset and integrally fused into homogenous piece; high density polyethylene (HDPE), high density polypropylene not acceptable.
   1. Composition: Dyes, organic fibrous material, and polycarbonate/phenolic resins.
   2. Surface Treatment: Non-ghosting, graffiti resistant surface integrally bonded to core through a manufacturing steps requiring thermal and mechanical pressure.
   3. Edges: Same color as the surface.
   4. Color:
      a. SC01 Golden Khaki.
   5. Acceptable SCRC Products: Or manufacturer approved equal.
      a. Ultimate Corian System by Shower Shapes.
      b. WilsonArt Gibraltar Material.
      c. WilsonArt EarthStone Material.

D. Performance Requirements:
   1. Graffiti Resistance (ASTM D 6578): Passed cleanability test; 5 staining agents.
   2. Scratch Resistance (ASTM D 2197): Maximum load value exceeds 10 kilograms.
   3. Impact Resistance (ASTM D 2794): Maximum impact force exceeds 30 inch-pounds.
   4. Smoke Developed Index (ASTM E 84): Less than 450.
   5. Flame Spread Index (ASTM E 84): Less than 75.
   6. National Fire Protection Association/International Building Code Interior Wall and Ceiling Finish: Class B.
   7. Uniform Building Code: Class II.

E. Finished Thickness:
   1. Stiles and Doors: 3/4 inch (19 mm).
   2. Panels and Screens: 1/2 inch (13 mm).

F. Stiles: Floor-anchored stiles furnished with expansion shields and threaded rods.
   1. Leveling Devices: 7 gauge, 3/16 inches (5 mm) thick, corrosion-resistant, chromate-treated, double zinc-plated steel angle leveling bar bolted to stile; furnished with 3/8 inch (10 mm) diameter threaded rods, hex nuts, lock washers, flat washers, spacer sleeves, expansion anchors, and shoe retainers.
   2. Stile Shoes: One-piece, 22 gauge (0.8 mm), 18-8, Type 304 stainless steel, 4 inch (102 mm) height; tops with 90 degree return to stile. One-piece shoe capable of adapting to 3/4 inch (19 mm) or 1 inch (25 mm) stile thickness and capable of being fastened (by clip) to stiles starting at wall line.

G. Anchors: Expansion shields and threaded rods at floor connections as applicable. Threaded rods secured to supports above ceiling as applicable. Supports above ceiling furnished and installed as Work of Section 05500 - Metal Fabrications.

H. Hardware: Chrome-plated "Zamak", aluminum, extruded plastic hardware not acceptable.
   1. Compliance: Operating force of less than 5 lb (2.25 kg).
   2. Emergency Access: Hinges, latch allow door to be lifted over keeper from outside compartment on inswing doors.
   3. Materials: 18-8, Type 304, heavy-gauge stainless steel with satin finish.
   4. Doorstops: Prevents inswinging doors from swinging out beyond stile; on outswing doors, doorstop prevents door from swinging in beyond stile.
   5. Fastening: Hardware secured to door and stile by through-bolted, theft-resistant, pin-in-head Torx stainless steel machine screws into factory-installed, threaded brass inserts. Fasteners secured directly into core not acceptable.
      a. Threaded Brass Inserts: Factory-installed; withstand direct pull force exceeding 1500 lb (680 kg) per insert.
   6. Clothes Hooks: Projecting no more than 1-1/8 inch (29 mm) from face of door.
   7. Door Latch: Track of door latch prevents inswing doors from swinging out beyond stile; on outswing doors, door keeper prevents door from swinging in beyond stile; 16

gauge (1.6 mm) sliding door latch, 14 gauge (2 mm) keeper.

8. Locking: Door locked from inside by sliding door latch into keeper.
9. Hinge Type:
   a. Full-Height Institutional Hinge.
      1) Hinges: 16 gauge (1.6 mm) stainless steel, self-closing, 3 section hinges.
10. Mounting Brackets:
   a. Standard Concealed.
      1) Mounting Brackets: Mounted inside compartment; exposed brackets on exterior of compartment not acceptable with the exception of outswing doors.

PART 3 PRODUCTS

3.1 PREPARATION

A. Prepare substrates including but not limited to blocking and supports in walls and ceilings at points of attachment using methods recommended by the manufacturer for achieving the best result for the substrates under the project conditions.
   1. Inspect areas scheduled to receive compartments for correct dimensions, plumbness of walls, and soundness of surfaces that would affect installation of mounting brackets.
   2. Verify spacing of plumbing fixtures to assure compatibility with installation of compartments.

B. If preparation is the responsibility of another installer, notify Architect in writing of deviations from manufacturer's recommended installation tolerances and conditions.

C. Do not proceed with installation until substrates have been properly prepared with blocking and supports in walls and ceilings at points of attachment and deviations from manufacturer's recommended tolerances are corrected. Commencement of installation constitutes acceptance of conditions.

3.2 INSTALLATION

A. Install products in strict compliance with manufacturer's written instructions and recommendations, including the following:
   1. Verify blocking and supports in walls and ceilings has been installed properly at points of attachment.
   2. Verify location does not interfere with door swings or use of fixtures.
   3. Use fasteners and anchors suitable for substrate and project conditions
   4. Install units rigid, straight, plumb, and level.
   5. Conceal evidence of drilling, cutting, and fitting to room finish.
   6. Test for proper operation.

3.3 ADJUSTING, CLEANING AND PROTECTION

A. Adjust hardware for proper operation after installation. Set hinge cam on in-swinging doors to hold doors open when unlatched. Set hinge cam on out-swinging doors to hold unlatched doors in closed position.

B. Touch-up, repair or replace damaged products.

C. Clean exposed surfaces of compartments, hardware, and fittings.

END OF SECTION

BOBRICK

Technical Data

1½" (38mm) DIAMETER STAINLESS STEEL GRAB BARS WITH SNAP FLANGE

B-6806 SERIES

Specify Finish Required:

- ☐ Satin finish
- ☐ Satin finish with peened gripping surface; add suffix .99 to model number

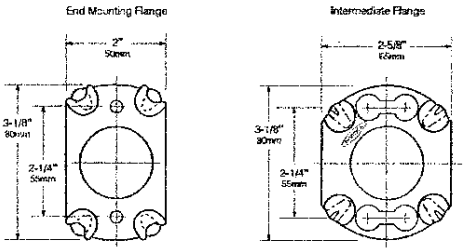

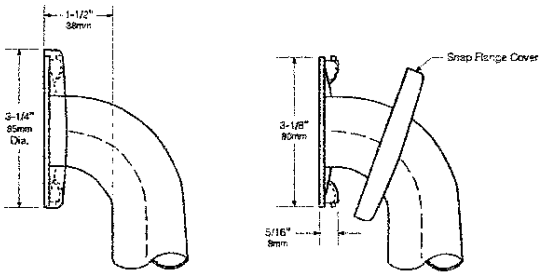

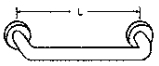	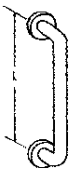	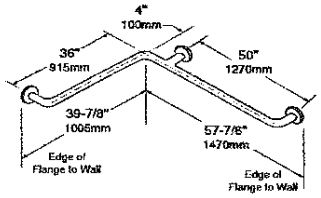
HORIZONTAL	**VERTICAL**	**TWO-WALL WHEELCHAIR TOILET COMPARTMENT**
B-6806 x 12, 18, 24, 30, 36, 42, 48		**B-68137**
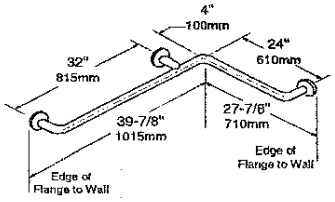	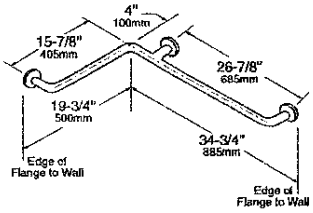	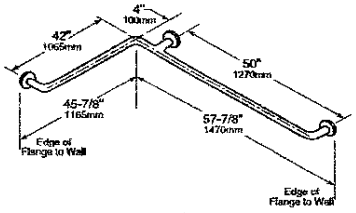
HORIZONTAL TUB / SHOWER / TOILET COMPARTMENT BAR 24 x 36	**HORIZONTAL TWO-WALL BAR for Shower Stall**	**TWO-WALL TOILET COMPARTMENT BAR 42 x 54**
B-68616	**B-6861**	**B-6897**

continued . . .

The illustrations and descriptions herein are applicable to production as of the date of this Technical Data Sheet.
The manufacturer reserves the right to, and does from time to time, make changes and improvements in designs and dimensions.

Rev. 8/16/13 SB Printed in U.S.A.
© 2013 by Bobrick Washroom Equipment, Inc.

MATERIALS:

Grab Bar — 18-8 S, type-304, 18-gauge (1.2mm) stainless steel tubing with satin-finish. 1-1/2" (38mm) outside diameter. Ends are heliarc welded to flanges. Clearance between the grab bar and wall is 1-1/2" (38mm).

Concealed Mounting Flanges — 18-8 S, type-304, 1/8" (3mm) thick, stainless steel plate; end flanges 2" x 3-1/8" (50 x 80mm) with two holes for attachment to wall. Intermediate flanges 2-5/8" x 3-1/8" (65 x 80mm) wide x 3-1/8" (80mm) diameter.

Snap Flange Covers — 18-8 S, type-304, 22-gauge (0.8mm) drawn stainless steel with satin-finish. 3-1/4" (85mm) diameter x 1/2" (13mm) deep. Each cover snaps over mounting flange to conceal mounting screws.

STRENGTH:

Bobrick grab bars that provide 1-1/2" (38mm) clearance from wall can support loads in excess of 900 pounds (408kg) if properly installed. Other grab bar configurations can support loads in excess of 250 pounds (113kg) if properly installed, complying with accessible design (including ADAAG in the U.S.A.) for structural strength

Safety Warning: Grab bars are no stronger than the anchors and walls to which they are attached and, therefore, must be firmly secured in order to support the loads for which they are intended. To avoid potential injury, the building owner or maintenance personnel should remove the grab bar from service if the grab bar is not adequately secured to wall or if there is any observed damage to the welds.

INSTALLATION:

Provide concealed anchor device or backing as specified or required in accordance with local building codes before wall is finished. Fasten concealed mounting flanges to anchor device or backing with two screws in each flange. Snap flange covers over each mounting flange to conceal mounting screws. Concealed anchor devices and mounting screws are not included with Bobrick grab bars and must be specified as an accessory.

For Grab Bars with an Intermediate Flange(s), Pull Snap-Flange Covers away from mounting flanges. Place grab bar in desired mounting location. Use intermediate flange as a template to mark location of mounting screws at intermediate flange only. Mark screw locations at the center of the slot in the middle of the double-keyhole shaped mounting holes (2) in the intermediate flange. Remove grab bar from wall. Drive the intermediate flange mounting screws into wall at marked locations. **Note:** Make sure to leave a space of just over 1/8" (3.17mm) between the underside of the screw head and the wall. Install grab bar on the wall by placing the round ends of the intermediate flange double-keyhole shaped mounting holes over the mounting screws (2) are located in the middle of the flange slots. Install the mounting screws into the wall at the end flanges and secure tightly. Tighten the mounting screws at the intermediate flange. Press all snap-flange covers into place to conceal mounting flanges.

Note: Recommend use of 1/4" or #14 sheet metal or wood screws to install Intermediate Flange. #12 screws may also be used.

Important Notes:

1. **Mounting Kits** — Bobrick offers a mounting kit for installing grab bars; **one Bobrick mounting kit is required for each flange.**

Mounting Kit No.	Description
252-30	Consists of #14 x 2½" type-304 stainless steel, Phillips round-head, sheet-metal screws.

2. **Grab Bar Fastener** — Bobrick offers a grab bar fastening system that secures all Bobrick grab bar series; **one Bobrick fastener is required for each flange.** Install grab bar without backing in wall requires minimum 5/8" (16mm) thick painted or tiled drywall.

WingIt™ Fastener No.	Description
251-4	Consists of 10–32 x 5/16" round-head, Phillips 18/8 stainless steel screws. (1) WingIt grab bar fastener.

3. **Optional Anchor Device** — Bobrick grab bar anchor device includes stainless steel machine screws to be used for attaching grab bars to anchors. **one Bobrick concealed anchor device is required for each flange.**

Optional Anchor No.	Description
2583	Anchor for 3/4" to 1" (19-25mm) panel 1 anchor required for each flange.
2586	Anchor for 1/2" to 1" (13mm) panel 1 anchor required for each flange.

SPECIFICATION:

Grab bar shall be type-304 stainless steel with satin-finish. Grab bar shall have 18-gauge (1.2mm) wall thickness and 1-1/2" (38mm) outside diameter. Clearance between the grab bar and wall shall be 1-1/2" (38mm). Concealed mounting flanges shall be 1/8" (3mm) thick stainless steel plate, 2" x 3-1/8" (50 x 80mm), and equipped with two screw holes for attachment to wall. Flange covers shall be 22 gauge (0.8mm), 3-1/4" (85mm) diameter x 1/2" (13mm) deep, and shall snap over mounting flange to conceal mounting screws and/or WingIt fasteners. Ends of grab bar shall pass through concealed mounting flanges and be heliarc welded to form one structural unit. Grab bar shall comply with accessible design (including ADAAG in the U.S.A.) for structural strength.

Grab Bar shall be Model _____ (insert model number) of Bobrick Washroom Equipment, Inc., Clifton Park, New York; Jackson, Tennessee; Los Angeles, California; Bobrick Washroom Equipment Company, Scarborough, Ontario; Bobrick Washroom Equipment Pty. Ltd., Australia; and Bobrick Washroom Equipment Limited, United Kingdom.

The illustrations and descriptions herein are applicable to production as of the date of this Technical Data Sheet.
The manufacturer reserves the right to, and does from time to time, make changes and improvements in designs and dimensions.

B-6806 Rev. 8/16/13 SS Printed in U.S.A.
© 2013 by Bobrick Washroom Equipment, Inc.

BOBRICK

Technical Data

SURFACE-MOUNTED MULTI-ROLL TOILET TISSUE DISPENSER

B-2888

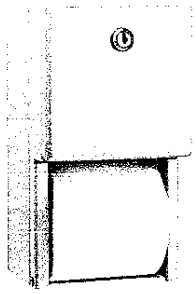

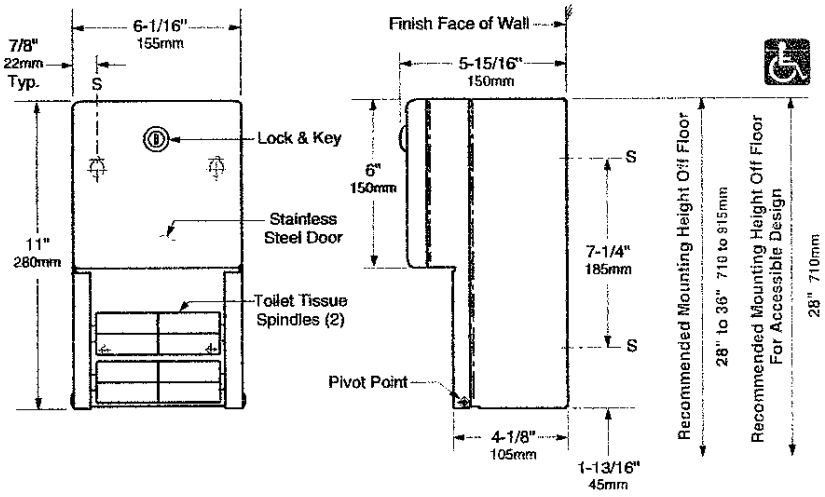

MATERIALS:

Cabinet — 18-8, type-304, 22-gauge (0.8mm) stainless steel. All-welded construction. Exposed surfaces have satin finish.

Door — 18-8, type-304, 22-gauge (0.8mm) stainless steel with 18-gauge (1.2mm) stainless steel door frame. Exposed surfaces have satin finish. Front of door is drawn, one-piece, seamless construction. Secured to cabinet with two rivets. Equipped with a tumbler lock keyed like other Bobrick washroom accessories.

Dispensing Mechanism, Inner Housing and Cam — 18-8, type-304, 18-gauge (1.2mm) stainless steel.

Spindles (2) — Heavy-duty, one-piece, molded ABS. Theft-resistant. Retained in dispensing mechanism when door is locked.

OPERATION:

Unit holds two standard-core toilet tissue rolls up to 5-1/4" (133mm) diameter (1800 sheets). Tissue rolls are loaded and locked into dispensing mechanism. Extra roll automatically drops in place when bottom roll is depleted. Depleted rolls can only be removed after unlocking door.

INSTALLATION:

For partitions with particleboard or other solid core, secure with four #10 x 5/8" (4.8 x 16mm) sheet-metal screws (not furnished) at points indicated by an *S*, or provide through-bolts, nuts, and washers.

For hollow-core metal partitions, provide solid backing into which sheet-metal screws can be secured. If two units are installed back-to-back, then provide threaded sleeves and machine screws for the full thickness of partition.

For plaster or dry wall construction, provide concealed backing to comply with local building codes, then secure unit with sheet-metal screws.

For other wall surfaces, provide fiber plugs or expansion shields for use with sheet-metal screws or provide 3/16" (5mm) toggle bolts or expansion bolts.

SPECIFICATION:

Surface-mounted multi-roll toilet tissue dispenser shall be type-304 stainless steel with all-welded construction, including dispensing mechanism, inner housing and cam; exposed surfaces shall have satin finish. Front of toilet tissue dispenser door shall be drawn, one-piece, seamless construction. Door shall be secured to cabinet with two rivets and equipped with a tumbler lock keyed like other Bobrick washroom accessories. Unit shall dispense two standard-core toilet tissue rolls up to 5-1/4" (133mm) diameter (1800 sheets). Extra roll shall automatically drop in place when bottom roll is depleted. Unit shall be equipped with two theft-resistant, heavy-duty, one-piece, molded ABS spindles.

Surface-Mounted Multi-Roll Toilet Tissue Dispenser shall be Model B-2888 of Bobrick Washroom Equipment, Inc., Clifton Park, New York; Jackson, Tennessee; Los Angeles, California; Bobrick Washroom Equipment Company, Scarborough, Ontario; Bobrick Washroom Equipment Pty. Ltd., Australia; and Bobrick Washroom Equipment Limited, United Kingdom.

The illustrations and descriptions herein are applicable to production as of the date of this Technical Data Sheet.
The manufacturer reserves the right to, and does from time to time, make changes and improvements in designs and dimensions.

Revised 4/27/11 Printed in U.S.A.
© 2011 by Bobrick Washroom Equipment, Inc.

Technical Data

ClassicSeries® SURFACE-MOUNTED PAPER TOWEL DISPENSER

B-262

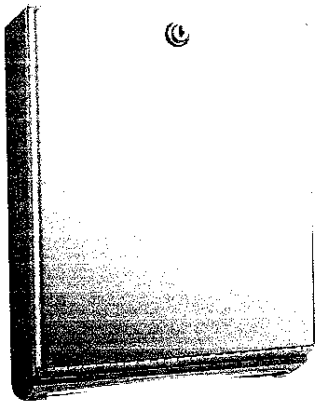

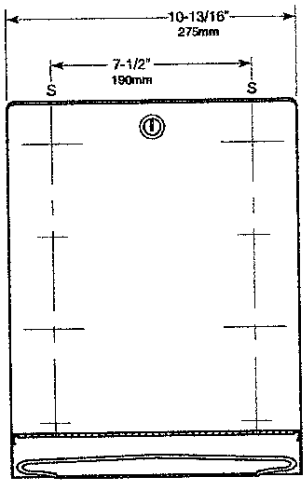

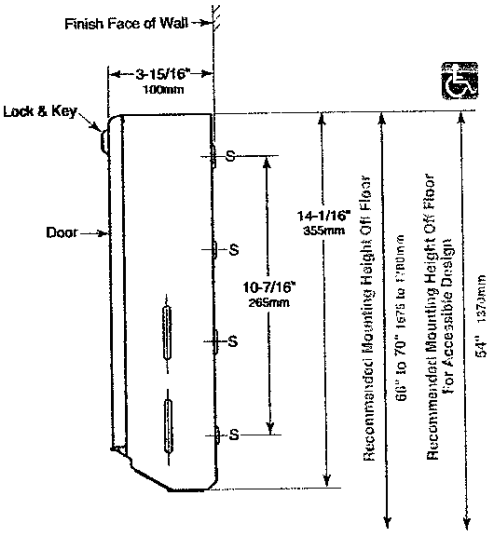

MATERIALS:

Cabinet — 18-8, type-304, 22-gauge (0.8mm) stainless steel. All-welded construction. Exposed surfaces have satin finish. Towel tray has hemmed opening to dispense paper towels without tearing.

Door — 18-8, type-304, 22-gauge (0.8mm) stainless steel with satin finish. Secured to cabinet with a full-length stainless steel piano-hinge. Equipped with a tumbler lock keyed like other Bobrick washroom accessories.

Optional: Order Bobrick Part No. 262-130 TowelMate® available as an optional accessory. TowelMate accessory allows for paper towels to dispense one at a time without bulging, sagging or falling through the towel tray opening. TowelMate fits Gamco and most manufacturers' similar models.

OPERATION:

Unit dispenses C-fold and multifold paper towels 3-1/8" to 3-13/16" (79–97mm) deep. Slots in sides of cabinet indicate refill time. Capacity: 400 C-fold or 525 multifold paper towels. To dispense narrower towels 2-1/2" to 3-1/8" (64–79mm) deep, order optional TowelMate accessory Bobrick Part No. 262-130.

INSTALLATION:

Mount unit on wall with four #10 x 1-1/4" (4.8 x 32mm) sheet-metal screws (not furnished) at four of the eight mounting holes indicated by an *S* (top slots and bottom holes preferable). For plaster or dry wall construction, provide concealed backing to comply with local building codes, then secure with sheet-metal screws. For other wall surfaces, provide fiber plugs or expansion shields for use with sheet-metal screws, or provide 1/8" (3mm) toggle bolts or expansion bolts.

SPECIFICATION:

Surface-mounted paper towel dispenser shall be type-304 stainless steel with all-welded construction; exposed surfaces shall have satin finish. Door shall be secured to cabinet with a full-length stainless steel piano-hinge and equipped with a tumbler lock keyed like other Bobrick washroom accessories. Paper towel tray shall have hemmed opening to dispense paper towels without tearing. Unit shall be capable of dispensing 400 C-fold or 525 multifold paper towels measuring 3-1/8" to 3-13/16" (79 to 97mm) deep. Narrower paper towels 2-1/2" to 3-1/8" (65 to 79mm) deep may be efficiently dispensed with the use of an optional TowelMate accessory, Bobrick Part No. 262-130. TowelMate accessory allows for paper towels to dispense one at a time without bulging, sagging or falling through the towel tray opening.

Surface-Mounted Paper Towel Dispenser shall be Model B-262 of Bobrick Washroom Equipment, Inc., Clifton Park, New York; Jackson, Tennessee; Los Angeles, California; Bobrick Washroom Equipment Company, Scarborough, Ontario; Bobrick Washroom Equipment Pty. Ltd., Australia; and Bobrick Washroom Equipment Limited, United Kingdom.

The illustrations and descriptions herein are applicable to production as of the date of this Technical Data Sheet.
The manufacturer reserves the right to, and does from time to time, make changes and improvements in designs and dimensions.

B-262 r06/30/15 Printed in U.S.A.
© 2015 by Bobrick Washroom Equipment, Inc.