// **Retail Price List & Product Info Guide**

ALTA
WINDOW FASHIONS

ROLLER

SHADES

Effective February 3, 2020

design simplified™

TABLE OF CONTENTS

Product Overview
• Features and Benefits 2
• Collection Information (includes Opacity) 3-4
• Color Chart 5-8

Pricing Information
• Group 1 (Clutch Roller with Beaded Chain and Option Charges) 9
• Group 2 (Clutch Roller with Beaded Chain and Option Charges) 10
• Group 3 (Clutch Roller with Beaded Chain and Option Charges) 11
• Group 4 (Clutch Roller with Beaded Chain and Option Charges) 12
• Group 5 (Clutch Roller with Beaded Chain and Option Charges) 13
• Group 6 (Clutch Roller with Beaded Chain and Option Charges) 14
• Group 7 (Clutch Roller with Beaded Chain and Option Charges) 15
• Group 8 (Clutch Roller with Beaded Chain and Option Charges) 16
• Motorization Options: PowerWand™, Simplicity Rechargeable & Remolift™ Motorization Charges 18
• Hardwired Motorization and Motor Ready Options. 19
• Deluxe Valance Pricing 27
• Fabric Valance Pricing 28
• Pocket Headrail, Side and Bottom Channel Pricing 29
• Decorative Pull Tassels, Spring Assist Option, Railroading/Material Splicing/Seam Placement 30
• Exterior Shades Surcharge Pricing 32

Product Specifications
• Large Decorative Patterns & Tube Size Upgrade 17
• Options & Features, including Beaded Loop Length Chart and TouchLift Cordless 20
• PowerWand™, Simplicity Rechargeable and RemoteLift™ Motorization 21-25
• Cassettes & Fascias. 26
• Deluxe, Fabric Valance, and Dual Mount Shade 27-28
• Pocket Headrail, Side and Bottom Channels 29
• Decorative Pull Tassels, Spring Assist Option, Railroading/Material Splicing/Seam Placement 30
• Bottomrail Options. 31
• Exterior Shades 32-33
• Ordering Notes, 2-On-1, Features and Options 34
• Product Notes. 35
• Flame Retardant Fabrics 35
• Product Size Specifications – Clutch Lift. 36-51
• Product Size Specifications – TouchLift Cordless. 52-53
• Product Size Specifications – PowerWand™ Rechargeable Motorization 54-72
• Product Size Specifications – Simplicity Rechargeable Motorization 73-87
• Product Size Specifications – RemoteLift™ Motorization 88-119
• Product Size Specifications – Hardwired Motorization 120-137
• Mounting Requirements, Clutch Systems 138
• Finished Dimensions 139-143
• Hardware Color Coordination Chart 144-152
• Solar Optical Information 153
• Solar Optical Chart 154-162
• Product Components/Roller Shade Characteristics 163-172
• Roller Shade Characteristics 173

FEATURES AND BENEFITS

- Over 520 stunning materials, with robust menu of decorative, blackout fabrics, vinyl, plus over 250 screen styles.
- Featuring various screen styles ranging from simple contemporary screens to decorative screens. Including popular Mermet and Phifer fabrics, with wide array of colors, weaves and openness factors ranging from 1% to 10%. Many are flame retardant, bacteria and fungal resistant materials. Outdoor grade selections are also available.
- Elegant selection of textures, patterns, color combinations, and grass-like styles provide valued privacy, and gently filter incoming light.
- Many of our decorative patterns are now available in both light filtering and blackout materials. This is a great way to coordinate light filtering and room darkening shades throughout a home while meeting specific light control needs by room.
- Control options include beaded chain clutch control, TouchLift cordless and motorized control for complete hands-free operating ease and convenience.
- Three cassette valance options with fabric insert, neatly hide the shade when raised, providing a more finished, decorative appearance.
- Two fascia options in multiple painted colors, add a sleek and flat decorative appearance, while neatly hiding raised shades.
- Optional deluxe valance designed with clear edge groove holding matching fabric insert, and fabric valance mounted on a wood dust cover can both serve as stylish alternatives to cassette headrails and fascia.
- Bottomrail options include the standard fabric-wrapped rail, optional painted deluxe rail, flat deco rail, and a heat-sealed aluminum bar (fabric pocket style).
- Exterior shades feature corrosion-resistant components and exterior grade fabrics that can stand up to the outdoor elements.
- Panel Track and Roman Shades are available. See separate guide for information and pricing.
- Limited Lifetime Warranty ensures your customers' satisfaction.

COLLECTION INFORMATION

Material Name	Color Family	Price Group	Material Width	Fabric Content	Opacity	Flame Retardant	Greenguard Certified	Bacterial & Fungal Resistant	Railroad Option	Splice/ Seam	Deluxe Valance	Fabric Valance	Bottom Rail Styles Fabric Wrapped/Deluxe/ Heat Sealed/Flat Deco**	Panel Track	Roller Roman Shades	Exterior Shade
1% E Screen	R80	4	122"	36% Fiberglass, 64% Vinyl	D	YES	YES	YES	YES	YES	YES	YES	All	YES	YES	YES
1% Sheerweave 2500	R01	6	126"	37% Fiberglass, 63% Vinyl on Fiberglass	D	YES	YES	YES	YES	YES	YES	YES	All	YES	YES	YES
1% Sheerweave 2701	RS21	5	126"	36% Fiberglass, 64% Vinyl on Fiberglass	D	YES	YES	YES	YES	YES	YES	YES	All	YES	YES	YES
1% Sheerweave 4901	P4901	5	98"	17% Polyester, 83% Vinyl on Polyester	D	YES	YES	YES	NO	NO	YES	YES	All	YES	NO	YES
1% Sheerweave 5000	P5001	4	98"	49% Polyester, 51% Vinyl on Polyester	D	YES	YES	YES	NO	NO	YES	YES	All except flat deco	YES	Varies	YES
1% Toka	RS11	3	118"	30% Polyester, 70% PVC	D	YES	YES	YES	YES	YES	YES	YES	All	YES	YES	NO
3% E Screen	R81	3	122"	36% Fiberglass, 64% Vinyl	C	YES	YES	YES	YES	YES	YES	YES	All	YES	YES	YES
3% M Screen	R58	4	122"	36% Fiberglass, 64% Vinyl	C	YES	YES	YES	YES	YES	YES	YES	All	YES	YES	YES
3% Sheerweave 2410	R06	4	126"	36% Fiberglass, 64% Vinyl on Fiberglass	C	YES	YES	YES	YES	YES	YES	YES	All	YES	YES	YES
3% Sheerweave 2703	P2703	4	126"	36% Fiberglass, 64% Vinyl on Fiberglass	C	YES	YES	YES	YES	YES	YES	YES	All	YES	NO	YES
3% Sheerweave 4400	RS2	4	126"	25% Polyester, 75% Vinyl on Polyester	C	YES	YES	YES	YES	YES	YES	YES	All except flat deco	YES	YES	YES
3% Sheerweave 4600	P4600	5	126"	17% Polyester, 83% Vinyl on Polyester	C	YES	YES	YES	YES	YES	YES	YES	Heat sealed only	YES	NO	YES
3% Sheerweave 4903	P4903	4	98"	17% Polyester, 83% Vinyl on Polyester	C	YES	YES	YES	NO	NO	YES	YES	All	YES	NO	YES
3% Sheerweave 5000	R07	4	98"	Varies	C	YES	YES	YES	NO	NO	YES	YES	All except flat deco	YES	NO	YES
3% T Screen	RS16	4	98"	36% Fiberglass, 64% Vinyl	C	YES	YES	YES	YES	NO	YES	YES	All	YES	YES	YES
4% S Screen	RS15	5	122"	33.6% Fiberglass, 59.6% Vinyl, 6.8% Polyester	B	YES	YES	YES	NO	NO	YES	YES	All	YES	NO	YES
4% Silver Screen	RS6	8	94"	64% PVC, 36% Fiberglass	C	YES	YES	YES	YES	YES	YES	YES	All except flat deco	YES	YES	NO
5% E Screen	R51	3	122"	36% Fiberglass, 64% Vinyl	B	YES	YES	YES	YES	YES	YES	YES	All	YES	YES	YES
5% M Screen Deco	R61	4	98"	36% Fiberglass, 64% Vinyl	B	YES	YES	YES	YES	YES	YES	YES	All	YES	YES	YES
5% Sheerweave 2000	P2000	4	126"	37% Fiberglass, 63% Vinyl on Fiberglass	B	YES	YES	YES	YES	YES	YES	YES	All	YES	NO	YES
5% Sheerweave 2390	RS1	3	126"	35% Fiberglass, 65% Vinyl on Fiberglass	B	YES	YES	YES	YES	YES	YES	YES	All	YES	YES	YES
5% Sheerweave 2705	P2705	4	126"	36% Fiberglass, 64% Vinyl on Fiberglass	B	YES	YES	YES	NO	NO	YES	NO	Heat sealed only	YES	NO	YES
5% Sheerweave 4000	R09	3	126"	25% Polyester, 75% Vinyl on Polyester	B	YES	YES	YES	YES	YES	YES	YES	All except flat deco	YES	YES	YES
5% Sheerweave 4500	P4500	4	126"	17% Polyester, 83% Vinyl on Polyester	B	YES	YES	YES	YES	YES	YES	YES	All	YES	NO	YES
5% Sheerweave 5000	R10	4	98"	Varies	B	YES	YES	YES	NO	NO	YES	YES	All* except flat deco	YES	NO	YES
7% Global Screen	RS14	2	118"	30% Polyester, 70%PVC	B	YES	YES	YES	YES	YES	YES	YES	All	YES	YES	NO
7% Sheerweave 5000	R34	4	98"	Varies	B	YES	YES	YES	NO	NO	YES	YES	All except flat deco	YES	NO	YES
10% E Screen	R19	3	122"	36% Fiberglass, 64% Vinyl	A	YES	YES	YES	YES	YES	YES	YES	All	YES	YES	YES
10% Sheerweave 2360	P2360	3	126"	35% Fiberglass, 65% Vinyl on Fiberglass	A	YES	YES	YES	NO	NO	YES	YES	All	YES	NO	YES
10% Sheerweave 4100	P4100	3	98"	25% Polyester, 75% Vinyl on Polyester	A	YES	YES	YES	YES	YES	YES	YES	All except flat deco	YES	NO	YES
10% Sheerweave 5000	R26	4	98"	28% Polyester, 72% Vinyl on Polyester	A	YES	YES	YES	NO	NO	YES	YES	All except flat deco	YES	NO	YES

* Heat sealed hem bar strongly recommended for R1015, R1019 & R1020
**Flat deco bottom rail (effective 5/20/2019)
Note: heat sealed hem bar is highly recommended with large shades for best shade appearance.

A. Glare Reducing
Softly filters light and reduces glare. Images, shapes and people can be seen clearly. Provides the least amount of light and shape screening.

B. Filtering
Filters strong light. Images, shapes and people can be seen with some clarity. Provides a modest degree of light and shape screening.

C. Shading
Significantly reduces light. Images, shapes and people cannot be seen clearly. Provides a moderate to strong degree of light and shape screening.

D. Blocking
Dramatically reduces light. Images, shapes and people are not distinguishable. Provides privacy against most all direct light and shape screening (except minimal light that may seep through closed or overlapping opaque/blackout vanes).

E. Blackout
Blocks out virtually all light (except light that may enter on the sides of the shade) for maximum privacy and darkness.

Openess cross over reference: *(Most colors cross over)*
- E Screen (1%, 3%, 5%, 7% & 10%), all colors cross over.
- Sheerweave (SW) - 1% SW2500, 3% SW2410, 5% SW2390 & 10% SW2360
  - 3% SW4400, 5% SW4000 & 10% SW4100
  - 1% SW2701, 3% SW2703 & 5% SW2705
  - 3% SW4600 & 5% SW4500
  - 1% SW4901 & 3% SW4903

COLLECTION INFORMATION

Material Name	Color Family	Price Group	Material Width	Fabric Content	Opacity	Flame Retardant	Greenguard Certified	Bacterial & Fungal Resistant	Railroad Option	Splice/ Seam	Deluxe Valance	Fabric Valance	Bottom Rail Styles Fabric Wrapped/Deluxe/ Heat Sealed/Flat Deco**	Panel Track	Roller Roman Shades	Exterior Shade
Alexandria	RD4	7	78"	100% Polyester	B	NO	NO	N/A	NO	NO	YES	YES	All	YES	YES	NO
Astaire	RF42	5	94"	100% Polyester	B	NO	NO	NO	NO	NO	NO	NO	All except flat deco	NO	NO	NO
Avila R Blackout	RB7	4	118"	37.5% Polyester, 62.5% Acrylic	E	YES	YES	YES	YES	YES	YES	YES	Heat sealed only	YES	NO	NO
Baroque	RD5	6	78"	65% Cotton, 35% Polyester	C	NO	NO	NO	NO	NO	YES	YES	All	YES	YES	NO
Blackout - Solid	R40	1	72"	100% PVC Coated Fiberglass	E	YES	YES	YES	YES	YES	YES	NO	All	YES	NO	NO
Brilliance	RD8	5	118"	100% Polyester	B	NO	NO	Yes	NO	NO	YES	YES	All	YES	YES	NO
Brilliance Blackout	RB6	6	118"	100% Polyester	E	NO	NO	YES	NO	NO	YES	YES	All	YES	NO	NO
Cararra	RD6	2	110"	100% Polyester with Acrylic Coating	C	NO	NO	N/A	NO	NO	YES	YES	All	YES	YES	NO
Cararra Blackout	RB4	2	110"	100% Polyester with Acrylic Coating	E	NO	NO	N/A	NO	NO	YES	YES	All	NO	NO	NO
Claudio	RD7	5	110"	90% Polyester, 10% Cationic Polyester	C	NO	NO	NO	NO	NO	YES	YES	All	YES	YES	NO
Claudio Blackout	RB5	5	110"	90% Polyester, 10% Cationic Polyester	E	NO	NO	NO	NO	NO	YES	YES	All	YES	NO	NO
Cusco	RF6	7	110"	100% Polyester	E	NO	NO	N/A	YES	YES	YES	YES	All	YES	YES	NO
Darien	RD1	5	90"	100% Polyester	B	NO	NO	N/A	NO	NO	YES	YES	All	YES	YES	NO
Drizzle	RD2	5	94"	89% Polyester, 11% Linen	B	NO	NO	N/A	YES	YES	YES	YES	All	YES	YES	NO
Fiona	RD3	6	78"	100% Polyester	C	NO	NO	YES	NO	NO	YES	YES	All	YES	YES	NO
Flocke Blackout	R92	8	94"	42% Fiberglass, 51% Acrylic, 7% Cotton Flocked Backing	E	YES	NO	NO	YES	YES	YES	YES	All	YES	NO	NO
Hayworth	RF32	2	98"	100% Polyester	B	NO	NO	NO	YES	YES	YES	YES	All	YES	YES	NO
Illusion	RF34	4	72"	100%Polyester	B	NO	NO	YES	YES	NO	YES	YES	All	YES	YES	NO
Jasper	RF5	8	110"	100% Polyester	C	NO	NO	N/A	YES	YES	YES	YES	All	YES	YES	NO
Linview	R56	3	122"	100% Polyester	B	NO	NO	N/A	YES	YES	YES	YES	All	YES	YES	NO
Linview Blackout	RB3	4	94"	100% Polyester	E	NO	NO	N/A	NO	NO	YES	YES	Heat sealed only	YES	NO	NO
Montero	RF4	3	94"	100% Polyester with Acrylic Coating	D	NO	NO	N/A	NO	NO	YES	YES	All	YES	YES	NO
Moravia	RF8	7	96"	100% Polyester	B	NO	NO	N/A	NO	NO	YES	YES	All	YES	YES	NO
Santa Cruz	RF3	3	94"	100% Polyester	D	NO	NO	N/A	NO	NO	YES	YES	All	YES	YES	NO
Santa Cruz Blackout	RB1	3	94"	100% Polyester	E	NO	NO	N/A	NO	NO	YES	YES	All	YES	NO	NO
Scala Blackout	R100	2	110"	100% Polyester	E	NO	NO	N/A	YES	YES	YES	NO	Heat sealed only	YES	NO	NO
Sheerweave 7200R *(Blackout)*	P7200R	4	118"	100% Polyester with Acrylic Foamed Backing	E	NO	YES	NO	NO	NO	YES	YES	Heat sealed only	YES	NO	NO
Sheerweave 7250R *(Light Filtering)*	P7250R	3	118"	100% Polyester with Acrylic Coating	C	NO	YES	NO	NO	NO	YES	YES	Heat sealed only	YES	NO	NO
Sheerweave 7400 *(Blackout)*	P7400	6	118"	100% Polyester with Acrylic Foamed Backing	E	YES	YES	NO	NO	NO	YES	YES	All	YES	NO	NO
Sheerweave 7450 *(Light Filtering)*	P7450	5	118"	100% Polyester with Acylic Coating	B	NO	YES	NO	NO	NO	YES	YES	All	YES	NO	NO
Sheerweave 7500R *(Blackout)*	P7500R	2	118"	100% Polyester with Acylic Coating	E	NO	YES	NO	NO	NO	YES	NO	Heat sealed only	YES	NO	NO
Sheerweave 7500 *(Blackout)*	P7500	3	118"	100% Polyester with Acylic Coating	E	YES	YES	NO	NO	NO	YES	NO	Heat sealed only	YES	NO	NO
Sheerweave 7600 *(Blackout)*	P7600	6	118"	45% Polyester/55% Acrylic Foamed Backing	E	YES	YES	NO	NO	NO	YES	YES	All	YES	NO	NO
Sheerweave 7650 *(Light Filtering)*	P7650	5	118"	100% Polyester	B	YES	YES	NO	NO	NO	YES	YES	All	YES	NO	NO
Sheerweave 7700R *(Blackout)*	P7700R	3	118"	100% Polyester with Acyrylic Foamed Backing	E	NO	YES	NO	NO	NO	YES	YES	All	YES	NO	NO
Sheerweave 7750R *(Light Filtering)*	P7750R	3	118"	100% Polyester with Acrylic Coating	C	NO	YES	NO	YES	YES	YES	YES	Heat sealed only	YES	NO	NO
Sorrento	RF35	2	108"	85.9% Polyester, 8.3% Cotton, 5.8% Flax	B	NO	NO	YES	NO	NO	YES	YES	All	YES	YES	NO
Sunscreen (SW) 7000	R11	7	118"	100% Polyester with Acrylic Foamed Backing	E	YES	YES	YES	YES	YES	YES	YES	All	YES	NO	NO
Tundra	RD9	2	94"	100% Polyester	B	NO	NO	NO	NO	NO	YES	YES	Heat sealed only	YES	NO	NO
Tundra Blackout	RB8	2	94"	100% Polyester	E	NO	NO	NO	NO	NO	YES	YES	Heat sealed only	YES	NO	NO
Uptown	R79	8	78"	66% Cotton, 34% Polyester	C	NO	NO	NO	YES	NO	YES	YES	All except heat sealed	YES	YES	NO
Uptown Room Darkening	R79	8	78"	66% Cotton, 34% Polyester	E	NO	NO	NO	YES	NO	YES	YES	All except heat sealed	YES	NO	NO
World Textures 1	R48	5	78"	80% Cotton, 20% Flax	C	NO	NO	NO	YES	YES	YES	YES	All	YES	NO	NO
World Textures 1 Blackout	R50	6	78"	100% Cotton	E	NO	NO	NO	YES	YES	YES	YES	All	YES	NO	NO
World Textures 2	R49	7	80"	40% Viscose, 23% PES, 20% Cotton, 17% Flax	C	NO	NO	NO	YES	YES	YES	YES	All except flat deco	YES	NO	NO
World Textures 2 Blackout	R50	7	80"	40% Viscose, 23% PES, 20% Cotton, 17% Flax	E	NO	NO	NO	YES	YES	YES	YES	All	YES	NO	NO

**Flat deco bottom rail (effective 5/20/2019)
Note: heat sealed hem bar is highly recommended with large shades for best shade appearance.

A. Glare Reducing
Softly filters light and reduces glare. Images, shapes and people can be seen clearly. Provides the least amount of light and shape screening.

B. Filtering
Filters strong light. Images, shapes and people can be seen with some clarity. Provides a modest degree of light and shape screening.

C. Shading
Significantly reduces light. Images, shapes and people cannot be seen clearly. Provides a moderate to strong degree of light and shape screening.

D. Blocking
Dramatically reduces light. Images, shapes and people are not distinguishable. Provides privacy against most all direct light and shape screening (except minimal light that may seep through closed or overlapping opaque/blackout vanes).

E. Blackout
Blocks out virtually all light (except light that may enter on the sides of the shade) for maximum privacy and darkness.

Complementary Collections: *(Most colors cross over)*

- Brilliance & Brilliance Blackout
- Cararra & Cararra Blackout
- Claudio & Claudio Blackout
- Linview & Linview Blackout
- Santa Cruz & Santa Cruz Blackout
- Sheerweave 72050R (LF) & 7200R (BO)
- Sheerweave 7450 (LF) & 7400 (BO)
- Sheerweave 7500R (BO) & 7500 (BO)
- Sheerweave 7650 (LF) & 7600 (BO)
- Sheerweave 7750R (LF) & 7700R (BO)
- Uptown & Uptown Blackout
- World Texture 2 & World Texture 2 Blackout

COLOR CHART

(Standard lead-time)

Material Name	Color Name	Color #
1% E Screen	Charcoal/Charcoal	R8009
1% E Screen	Charcoal/Cocoa	R8007
1% E Screen	Charcoal/Grey	R8008
1% E Screen	White	R8004
1% E Screen	White/Linen	R8005
1% E Screen	White/Pearl	R8003
1% Sheerweave 2500	Charcoal	R0103
1% Sheerweave 2500	Charcoal/Alpaca	R0109
1% Sheerweave 2500	Charcoal/Chestnut	R0104
1% Sheerweave 2500	Oyster	R0105
1% Sheerweave 2500	Oyster/Beige	R0106
1% Sheerweave 2500	Oyster/Pearl Gray	R0107
1% Sheerweave 2701	Oyster	RS2101
1% Sheerweave 2701	Oyster/Beige	RS2102
1% Sheerweave 2701	Oyster/Charcoal	RS2106
1% Sheerweave 2701	Oyster/Chestnut	RS2105
1% Sheerweave 2701	Oyster/Pearl Gray	RS2103
1% Sheerweave 2701	Oyster/Pewter	RS2104
1% Sheerweave 5000	Jute/Coffee	P5001 R88
1% Sheerweave 5000	Jute/Flax	P5001 R86
1% Toka	Bone	RS11002
1% Toka	Platinum	RS11003
1% Toka	White	RS11001
3% E Screen	Charcoal/Charcoal	R8102
3% E Screen	Charcoal/Cocoa	R8107
3% E Screen	Charcoal/Grey	R8108
3% E Screen	White/Linen	R8104
3% E Screen	White/Pearl	R8105
3% E Screen	White/White	R8106
3% M Screen	Charcoal/Apricot	R5803
3% M Screen	Charcoal/Charcoal	R5805
3% M Screen	Charcoal/Sable	R5808
3% M Screen	White Linen	R5807
3% M Screen	White/White	R5801
3% Sheerweave 2410	Charcoal	R0603
3% Sheerweave 2410	Charcoal/Alpaca	R0609
3% Sheerweave 2410	Charcoal/Chestnut	R0604
3% Sheerweave 2410	Oyster	R0605
3% Sheerweave 2410	Oyster/Beige	R0606
3% Sheerweave 2410	Oyster/Pearl Gray	R0607
3% Sheerweave 2703	Oyster	P2703 P12
3% Sheerweave 2703	Oyster/Beige	P2703 P13
3% Sheerweave 2703	Oyster/Charcoal	P2703 P28
3% Sheerweave 2703	Oyster/Chestnut	P2703 P92
3% Sheerweave 2703	Oyster/Pearl Gray	P2703 P14
3% Sheerweave 2703	Oyster/Pewter	P2703 P91

Material Name	Color Name	Color #
3% Sheerweave 4400	Alabaster	RS2200
3% Sheerweave 4400	Chalk	RS2202
3% Sheerweave 4400	Greystone	RS2201
3% Sheerweave 4400	Pewter	RS2203
3% Sheerweave 5000	Bark/Sienna	R0710
3% Sheerweave 5000	Chenille/Honey	R0707
3% Sheerweave 5000	Linen/Cinnamon	R0702
3% Sheerweave 5000	Linen/Cream	R0704
3% Sheerweave 5000	Linen/Fig	R0705
3% T Screen	Charcoal/Charcoal	RS16005
3% T Screen	Charcoal/Grey	RS16006
3% T Screen	Sable/Charcoal	RS16003
3% T Screen	White/Pearl	RS16004
3% T Screen	White/Sable-Straw	RS16002
3% T Screen	White/White	RS16001
4% S Screen	Ginger	RS15006
4% S Screen	Granite	RS15004
4% S Screen	Papyrus	RS15003
4% S Screen	Porcelain	RS15001
4% S Screen	Sesame	RS15007
4% Silver Screen	Beige	RS6501
4% Silver Screen	Black	RS6504
4% Silver Screen	Bronze	RS6503
4% Silver Screen	Light Grey	RS6500
4% Silver Screen	White	RS6502
5% E Screen	Charcoal/Charcoal	R5105
5% E Screen	Charcoal/Cocoa	R5104
5% E Screen	Charcoal/Grey	R5110
5% E Screen	Pure White	R5101
5% E Screen	White/Linen	R5108
5% E Screen	White/Pearl	R5109
5% M Screen Deco	Flagstone	R6107
5% M Screen Deco	Harvest Wheat	R6104
5% M Screen Deco	Hazelnut	R6105
5% M Screen Deco	Parchment	R6106
5% M Screen Deco	River Rock	R6102
5% M Screen Deco	Tumbleweed	R6103

Material Name	Color Name	Color #
5% Sheerweave 2390	Charcoal	RS1105
5% Sheerweave 2390	Charcoal/Alpaca	RS1106
5% Sheerweave 2390	Charcoal/Chestnut	RS1104
5% Sheerweave 2390	Charcoal/Gray	RS1102
5% Sheerweave 2390	Oyster	RS1100
5% Sheerweave 2390	Oyster/Beige	RS1101
5% Sheerweave 2390	Oyster/Pearl Gray	RS1103
5% Sheerweave 4000	Alabaster	R0901
5% Sheerweave 4000	Chalk	R0902
5% Sheerweave 4000	Granite	R0906
5% Sheerweave 4000	Greystone	R0904
5% Sheerweave 5000	Aura Sable	R1021
5% Sheerweave 5000	Bark/Ash	R1009
5% Sheerweave 5000	Bark/Pewter	R1010
5% Sheerweave 5000	Bark/Tiger Oak	R1001
5% Sheerweave 5000	Chenille/Driftwood	R1007
5% Sheerweave 5000	Contour Essence	R1017
5% Sheerweave 5000	Contour Natural	R1016
5% Sheerweave 5000	Contour Smoke	R1018
5% Sheerweave 5000	Linen/Pearl	R1014
5% Sheerweave 5000	Linen/Taupe	R1015
5% Sheerweave 5000	Metro /Platinum	R1019
5% Sheerweave 5000	Pavestone	R1020
5% Sheerweave 5000	Tweed/Buckeye	R1003
5% Sheerweave 5000	Tweed/Oatmeal	R1006
5% Sheerweave 5000	Twine/Flagstone	R1012
5% Sheerweave 5000	Twine/Metal	R1013
5% Sheerweave 5000	Twine/Oatmeal	R1011
7% Global Screen	Barley	RS14002
7% Global Screen	Canvas	RS14001
7% Global Screen	Platinum	RS14003
7% Sheerweave 5000	Bamboo/Wheat	R34 Q46
7% Sheerweave 5000	Bamboo White/Wheat	R3409
7% Sheerweave 5000	Linen/Clay	R3408
10% E Screen	Charcoal/Charcoal	R1902
10% E Screen	Charcoal/Cocoa	R1907
10% E Screen	White Pearl	R1908
10% E Screen	White/Linen	R1905
10% E Screen	White/White	R1906
10% Sheerweave 5000	Bamboo/Birch	R2603

COLOR CHART

(Standard lead-time)

Material Name	Color Name	Color #
Alexandria	Charcoal	RD403
Alexandria	Duck Egg	RD402
Alexandria	Oatmeal	RD401
Astaire	Grey	RF42004
Astaire	Ivory	RF42002
Astaire	White	RF42001
Avila R Blackout	Canvas	RB703
Avila R Blackout	Chalk	RB702
Avila R Blackout	Charcoal	RB708
Avila R Blackout	Khaki	RB705
Avila R Blackout	Linen	RB704
Avila R Blackout	Marine	RB706
Avila R Blackout	Onyx	RB709
Avila R Blackout	Pewter	RB707
Avila R Blackout	White	RB701
Baroque	Champagne	RD501
Baroque	Cyan	RD502
Baroque	Ebony	RD504
Baroque	Ruby	RD503
Blackout - Solid	Alabaster	R4011
Blackout - Solid	Bone	R4005
Blackout - Solid	Buff	R4008
Blackout - Solid	Oyster	R4006
Blackout - Solid	White	R4001
Brilliance	Birch	RD802
Brilliance	Dove Gray	RD804
Brilliance	Pearl	RD801
Brilliance	Putty	RD803
Brilliance	Pyrite	RD805
Brilliance	Steel	RD806
Brilliance Blackout	Birch	RB602
Brilliance Blackout	Dove Gray	RB604
Brilliance Blackout	Pearl	RB601
Brilliance Blackout	Putty	RB603
Brilliance Blackout	Pyrite	RB605
Brilliance Blackout	Steel	RB606
Carrara	Coal	RD606
Carrara	Saddle	RD604
Carrara	Silver	RD603
Carrara	Storm	RD605
Carrara	Tusk	RD602
Carrara	White	RD601
Carrara Blackout	Coal	RB406
Carrara Blackout	Storm	RB405
Carrara Blackout	Saddle	RB404
Carrara Blackout	Silver	RB403
Carrara Blackout	Tusk	RB402
Carrara Blackout	White	RB401
Claudio	Ash	RD706
Claudio	Cloud	RD701
Claudio	Cream	RD702
Claudio	Gray Matters	RD708
Claudio	Mink	RD704
Claudio	Mist	RD703
Claudio	Reef	RD705
Claudio	Sailcloth	RD707

Material Name	Color Name	Color #
Claudio Blackout	Ash	RB506
Claudio Blackout	Cloud	RB501
Claudio Blackout	Cream	RB502
Claudio Blackout	Mink	RB504
Claudio Blackout	Mist	RB503
Claudio Blackout	Reef	RB505
Cusco	Chateau	RF6400
Cusco	Coconut Husk	RF6401
Cusco	Shadow Ridge	RF6402
Darien	Bark	RD106
Darien	Beige	RD101
Darien	Charcoal	RD107
Darien	Driftwood	RD103
Darien	Mocha	RD104
Darien	Sand	RD102
Darien	Sea Mist	RD105
Drizzle	Flax	RD201
Drizzle	Graphite	RD205
Drizzle	Hessian	RD202
Drizzle	Iron	RD204
Drizzle	Tweed	RD203
Fiona	Grey	RD303
Fiona	Sand	RD301
Fiona	Smokey Blue	RD302
Flocke Blackout	Chartreux	R9205
Flocke Blackout	Crystal	R9204
Flocke Blackout	Sea Cliff	R9202
Flocke Blackout	Spun Silk	R9203
Hayworth	Linen	RF32001
Hayworth	White	RF32000
Illusion	Dove	RF34003
Illusion	Flannel	RF34004
Illusion	Ivory	RF34002
Illusion	Snow	RF34001
Jasper	Country Linen	RF5303
Jasper	Heather	RF5302
Jasper	Storm Cloud	RF5300
Jasper	Tweed	RF5301
Linview	Ash	R5613
Linview	Cabana Wood	R5603
Linview	Fog	R5611
Linview	Macadamia	R5606
Linview	Midnight Black	R5615
Linview	Morning Light	R5602
Linview	Navy	R5610
Linview	New York Grey	R5614
Linview	Pale Lapis	R5609
Linview	Pale Oak	R5617
Linview	Porpoise	R5612
Linview	Rural Green	R5607
Linview	Sea Smoke	R5616
Linview	Skyward	R5608
Linview	Slate	R5605
Linview	Soft Linen	R5618
Linview	Summer White	R5601
Linview	Weathered Walnut	R5604

Material Name	Color Name	Color #
Linview Blackout	Alabaster	RB302
Linview Blackout	Café Crème	RB303
Linview Blackout	Collonade Gray	RB306
Linview Blackout	Gauntlet Gray	RB309
Linview Blackout	Pale Gray	RB307
Linview Blackout	Pale Oak	RB311
Linview Blackout	Pure White	RB301
Linview Blackout	Sea Smoke	RB310
Linview Blackout	Soft Linen	RB312
Linview Blackout	Stone	RB304
Linview Blackout	Tranquility	RB305
Linview Blackout	Whale	RB308
Montero	Dark Walnut	RF4200
Montero	Java Coast	RF4201
Montero	Wicker Basket	RF4202
Moravia	Coastal	RF8602
Moravia	Countryside	RF8600
Moravia	Seabreeze	RF8601
Santa Cruz	Bunglehouse Blue	RF3101
Santa Cruz	Manchester	RF3100
Santa Cruz	Night Sky	RF3106
Santa Cruz	Rainforest	RF3107
Santa Cruz Blackout	Bunglehouse Blue	RB102
Santa Cruz Blackout	Manchester	RB101
Santa Cruz Blackout	Night Sky	RB104
Santa Cruz Blackout	Rainforest	RB103
Scala Blackout	Gray	R10005
Scala Blackout	Off White	R10002
Scala Blackout	Silver	R10004
Scala Blackout	White	R10001
Sorrento	Bisque	RF35002
Sorrento	Linen	RF35001
Sorrento	Stucco	RF35003
Sunscreen 7000	Birch	R1101
Sunscreen 7000	Graphite	R1107
Sunscreen 7000	Mushroom	R1102
Sunscreen 7000	Onyx	R1103
Sunscreen 7000	Sand	R1104
Sunscreen 7000	White	R1106
Tundra	Antique White	RD9 02
Tundra	Dark Gray	RD9 05
Tundra	Ice White	RD9 01
Tundra	Oxford Jean	RD9 06
Tundra	Sand	RD9 03
Tundra	Whale	RD9 04
Tundra Blackout	Dark Gray	RB8 05
Tundra Blackout	Ivory	RB8 02
Tundra Blackout	Oxford Jean	RB8 06
Tundra Blackout	Sand	RB8 03
Tundra Blackout	Whale	RB8 04
Tundra Blackout	White	RB8 01
Uptown	Sterling	R7902
Uptown	Sterling Room Darkening	R7901
World Textures 1	Cyprus Coast	R4802
World Textures 1	Medina Mirage	R4803
World Textures 1	Medina Vision	R4806
World Textures 1 Blackout	Cypress Formal	R5001
World Textures 2	Oslo Blend	R4902
World Textures 2 Blackout	Oslo Terrain	R5004

COLOR CHART

(Lead-time: 12 business day)

Decorative (Light Filtering)		
Material Name	**Color Name**	**Color #**
Sheerweave 7250R	Blazer	P7250R RL7
Sheerweave 7250R	Chiffon	P7250R RL4
Sheerweave 7250R	Chrome	P7250R RL5
Sheerweave 7250R	Earl Grey	P7250R RL6
Sheerweave 7250R	Oyster	P7250R RL2
Sheerweave 7250R	Raven	P7250R RL8
Sheerweave 7250R	Sail	P7250R RL3
Sheerweave 7250R	Swan	P7250R RL1
Sheerweave 7450	Cotton	P7450 U80
Sheerweave 7450	Flint	P7450 U87
Sheerweave 7450	Parchment	P7450 U81
Sheerweave 7450	Pebble	P7450 U83
Sheerweave 7450	Seagrass	P7450 U84
Sheerweave 7450	Sesame	P7450 U82
Sheerweave 7450	Shale	P7450 U85
Sheerweave 7450	Spice	P7450 U86
Sheerweave 7650	Bright White	P7650 U90
Sheerweave 7650	Coal	P7650 U97
Sheerweave 7650	Coffee	P7650 U96
Sheerweave 7650	Dove Grey	P7650 U93
Sheerweave 7650	Ivory	P7650 U99
Sheerweave 7650	Khaki	P7650 U92
Sheerweave 7650	Shell	P7650 U91
Sheerweave 7650	Taupe	P7650 U94
Sheerweave 7650	Thunder	P7650 U95
Sheerweave 7750R	Chalk	P7750R TL4
Sheerweave 7750R	Concrete	P7750R TL3
Sheerweave 7750R	Crystal	P7750R TL1
Sheerweave 7750R	Graphite	P7750R TL5
Sheerweave 7750R	Onyx	P7750R TL7
Sheerweave 7750R	Pewter	P7750R TL6
Sheerweave 7750R	Sand	P7750R TL2

Blackout		
Material Name	**Color Name**	**Color #**
Sunscreen (SW) 7000	Canvas	R11 U67
Sunscreen (SW) 7000	Canyon	R11 V41
Sunscreen (SW) 7000	Cocoa	R11 U69
Sunscreen (SW) 7000	Wheat	R11 Q57
Sheerweave 7200R	Blazer	P7200R RB7
Sheerweave 7200R	Chiffon	P7200R RB4
Sheerweave 7200R	Chrome	P7200R RB5
Sheerweave 7200R	Earl Grey	P7200R RB6
Sheerweave 7200R	Oyster	P7200R RB2
Sheerweave 7200R	Raven	P7200R RB8
Sheerweave 7200R	Sail	P7200R RB3
Sheerweave 7200R	Swan	P7200R RB1
Sheerweave 7400	Cotton	P7400 U80
Sheerweave 7400	Flint	P7400 U87
Sheerweave 7400	Parchment	P7400 U81
Sheerweave 7400	Pebble	P7400 U83
Sheerweave 7400	Seagrass	P7400 U84
Sheerweave 7400	Sesame	P7400 U82
Sheerweave 7400	Shale	P7400 U85
Sheerweave 7400	Spice	P7400 U86
Sheerweave 7500	Cloud	P7500 R39
Sheerweave 7500	Dune	P7500 R17
Sheerweave 7500	Ice	P7500 R13
Sheerweave 7500	Limestone	P7500 R41
Sheerweave 7500	Midnight	P7500 R22
Sheerweave 7500	Midnightx2	P7500 R99
Sheerweave 7500	Mist	P7500 R97
Sheerweave 7500	Nimbus	P7500 R42
Sheerweave 7500	Odyssey	P7500 R20
Sheerweave 7500	Orient	P7500 R21
Sheerweave 7500	Orientx2	P7500 S97
Sheerweave 7500	Porcelain	P7500 R40
Sheerweave 7500	Stone	P7500 R19
Sheerweave 7500	Tundra	P7500 R43

Blackout		
Material Name	**Color Name**	**Color #**
Sheerweave 7500R	Cloud	P7500R R45
Sheerweave 7500R	Dune	P7500R R51
Sheerweave 7500R	Ice	P7500R R44
Sheerweave 7500R	Limestone	P7500R R47
Sheerweave 7500R	Midnight	P7500R R55
Sheerweave 7500R	Mist	P7500R R48
Sheerweave 7500R	Nimbus	P7500R R49
Sheerweave 7500R	Odyssey	P7500R R53
Sheerweave 7500R	Orient	P7500R R54
Sheerweave 7500R	Porcelain	P7500R R46
Sheerweave 7500R	Stone	P7500R R52
Sheerweave 7500R	Tundra	P7500R R50
Sheerweave 7600	Bright White	P7600 U90
Sheerweave 7600	Coal	P7600 U97
Sheerweave 7600	Coffee	P7600 U96
Sheerweave 7600	Dove Grey	P7600 U93
Sheerweave 7600	Ivory	P7600 U99
Sheerweave 7600	Khaki	P7600 U92
Sheerweave 7600	Shell	P7600 U91
Sheerweave 7600	Taupe	P7600 U94
Sheerweave 7600	Thunder	P7600 U95
Sheerweave 7700R	Chalk	P7700R TB4
Sheerweave 7700R	Concrete	P7700R TB3
Sheerweave 7700R	Crystal	P7700R TB1
Sheerweave 7700R	Graphite	P7700R TB5
Sheerweave 7700R	Onyx	P7700R TB7
Sheerweave 7700R	Pewter	P7700R TB6
Sheerweave 7700R	Sand	P7700R TB2

COLOR CHART

(Lead-time: 12 business day)

Screen		
Material Name	**Color Name**	**Color #**
1% Sheerweave 2500	Beige	R01 Q20
1% Sheerweave 2500	Beige/Pearl Gray	R01 Q21
1% Sheerweave 2500	Charcoal/Gray	R01 V22
1% Sheerweave 2500	Pearl Gray	R01 V20
1% Sheerweave 2701	Charcoal	RS21 V21
1% Sheerweave 2701	Charcoal/Brown	RS21 V66
1% Sheerweave 2701	Charcoal/Gray	RS21 V22
1% Sheerweave 2701	Charcoal/Slate	RS21 V64
1% Sheerweave 2701	Charcoal/Taupe	RS21 V65
1% Sheerweave 4901	Birch	P4901 Q25
1% Sheerweave 4901	Chalk	P4901 P06
1% Sheerweave 4901	Chalk/Black	P4901 P25
1% Sheerweave 4901	Chalk/Wheat	P4901 P26
1% Sheerweave 4901	Cobblestone	P4901 Q26
1% Sheerweave 4901	Ebony	P4901 V10
1% Sheerweave 4901	Flaxen	P4901 Q22
1% Sheerweave 4901	Kettal Grey	P4901 Q07
1% Sheerweave 4901	Pewter/Chalk	P4901 V03
1% Sheerweave 4901	Slate	P4901 V28
1% Sheerweave 4901	Soft Grey	P4901 Q27
1% Sheerweave 4901	Tobacco	P4901 Q16
1% Sheerweave 4901	Whitesands	P4901 Q23
1% Sheerweave 5000	Jute/Latte	P5001 R87
1% Sheerweave 5000	Jute/Parchment	P5001 R85
3% Sheerweave 2410	Beige	R06 Q20
3% Sheerweave 2410	Beige/Pearl Gray	R06 Q21
3% Sheerweave 2410	Charcoal/Gray	R06 V22
3% Sheerweave 2410	Pearl Gray	R06 V20
3% Sheerweave 2703	Charcoal	P2703 V21
3% Sheerweave 2703	Charcoal/Brown	P2703 V66
3% Sheerweave 2703	Charcoal/Gray	P2703 V22
3% Sheerweave 2703	Charcoal/Slate	P2703 V64
3% Sheerweave 2703	Charcoal/Taupe	P2703 V65
3% Sheerweave 4400	Ash	RS2 U64
3% Sheerweave 4400	Ebony	RS2 U65
3% Sheerweave 4400	Granite	RS2 U62
3% Sheerweave 4400	Pebblestone	RS2 U60
3% Sheerweave 4400	Tobacco	RS2 U66
3% Sheerweave 4600	Cappuccino	P4600 V95
3% Sheerweave 4600	Chalk	P4600 P06
3% Sheerweave 4600	Dark Bronze	P4600 V96
3% Sheerweave 4600	Ebony	P4600 V10
3% Sheerweave 4600	Ecru	P4600 Q59
3% Sheerweave 4600	Golden Sand	P4600 Q60
3% Sheerweave 4600	Granite	P4600 P10
3% Sheerweave 4600	Linen	P4600 U32
3% Sheerweave 4600	Pewter	P4600 V07
3% Sheerweave 4600	Sandstone	P4600 V44

Screen		
Material Name	**Color Name**	**Color #**
3% Sheerweave 4903	Birch	P4903 Q25
3% Sheerweave 4903	Chalk	P4903 P06
3% Sheerweave 4903	Chalk/Black	P4903 P25
3% Sheerweave 4903	Chalk/Wheat	P4903 P26
3% Sheerweave 4903	Cobblestone	P4903 Q26
3% Sheerweave 4903	Ebony	P4903 V10
3% Sheerweave 4903	Flaxen	P4903 Q22
3% Sheerweave 4903	Kettal Grey	P4903 Q07
3% Sheerweave 4903	Pewter/Chalk	P4903 V03
3% Sheerweave 4903	Slate	P4903 V28
3% Sheerweave 4903	Soft Grey	P4903 Q27
3% Sheerweave 4903	Tobacco	P4903 Q16
3% Sheerweave 4903	Whitesands	P4903 Q23
3% Sheerweave 5000	Chenille/Marshmallow	R07 R89
3% Sheerweave 5000	Chenille/Pearl	R07 R90
3% Sheerweave 5000	Linen/Burlap	R07 U11
3% Sheerweave 5000	Linen/Cranberry	R07 R11
3% Sheerweave 5000	Linen/Topaz	R07 U10
3% Sheerweave 5000	Wicker/Straw	R07 R93
5% Sheerweave 2000	Bone	P2000 Q05
5% Sheerweave 2000	Bone/Platinum	P2000 Q06
5% Sheerweave 2000	Bronze	P2000 Q10
5% Sheerweave 2000	Charcoal	P2000 V21
5% Sheerweave 2000	Charcoal/Chestnut	P2000 V24
5% Sheerweave 2000	Charcoal/Gray	P2000 V22
5% Sheerweave 2000	Platinum	P2000 V04
5% Sheerweave 2000	White	P2000 P02
5% Sheerweave 2000	White/Bone	P2000 P04
5% Sheerweave 2000	White/Platinum	P2000 P05
5% Sheerweave 2390	Beige	RS1 Q20
5% Sheerweave 2390	Beige/Pearl Gray	RS1 Q21
5% Sheerweave 2390	Pearl Gray	RS1 V20
5% Sheerweave 2705	Charcoal	P2705 V21
5% Sheerweave 2705	Charcoal/Brown	P2705 V66
5% Sheerweave 2705	Charcoal/Gray	P2705 V22
5% Sheerweave 2705	Charcoal/Slate	P2705 V64
5% Sheerweave 2705	Charcoal/Taupe	P2705 V65
5% Sheerweave 2705	Oyster	P2705 P12
5% Sheerweave 2705	Oyster/Beige	P2705 P13
5% Sheerweave 2705	Oyster/Charcoal	P2705 P28
5% Sheerweave 2705	Oyster/Chestnut	P2705 P92
5% Sheerweave 2705	Oyster/Pearl Gray	P2705 P14
5% Sheerweave 2705	Oyster/Pewter	P2705 P91
5% Sheerweave 4000	Ash	R09 U64
5% Sheerweave 4000	Ebony	R09 U65
5% Sheerweave 4000	Pebblestone	R09 U60
5% Sheerweave 4000	Pewter	R09 U63
5% Sheerweave 4000	Tobacco	R09 U66

Screen		
Material Name	**Color Name**	**Color #**
5% Sheerweave 4500	Cappuccino	P4500 V95
5% Sheerweave 4500	Chalk	P4500 P06
5% Sheerweave 4500	Dark Bronze	P4500 V96
5% Sheerweave 4500	Ebony	P4500 V10
5% Sheerweave 4500	Ecru	P4500 Q59
5% Sheerweave 4500	Golden Sand	P4500 Q60
5% Sheerweave 4500	Granite	P4500 P10
5% Sheerweave 4500	Linen	P4500 U32
5% Sheerweave 4500	Pewter	P4500 V07
5% Sheerweave 4500	Sandstone	P4500 V44
5% Sheerweave 5000	Aura/Poetry	R10 S84
5% Sheerweave 5000	Coffee	R10 S82
5% Sheerweave 5000	Contour/Smudge	R10 S77
5% Sheerweave 5000	Marble/Sand	R10 Q43
5% Sheerweave 5000	Wicker/Mushroom	R10 Q51
7% Sheerweave 5000	Twine/Jewel	R34 S73
10% Sheerweave 2360	Beige	P2360 Q20
10% Sheerweave 2360	Beige/Pearl Gray	P2360 Q21
10% Sheerweave 2360	Charcoal	P2360 V21
10% Sheerweave 2360	Charcoal/Alpaca	P2360 V32
10% Sheerweave 2360	Charcoal/Chestnut	P2360 V24
10% Sheerweave 2360	Charcoal/Gray	P2360 V22
10% Sheerweave 2360	Oyster	P2360 P12
10% Sheerweave 2360	Oyster/Beige	P2360 P13
10% Sheerweave 2360	Oyster/Pearl Gray	P2360 P14
10% Sheerweave 2360	Pearl Gray	P2360 V20
10% Sheerweave 4100	Alabaster	P4100 U59
10% Sheerweave 4100	Ash	P4100 U64
10% Sheerweave 4100	Chalk	P4100 U58
10% Sheerweave 4100	Ebony	P4100 U65
10% Sheerweave 4100	Granite	P4100 U62
10% Sheerweave 4100	Greystone	P4100 U61
10% Sheerweave 4100	Pebblestone	P4100 U60
10% Sheerweave 4100	Pewter	P4100 U63
10% Sheerweave 4100	Tobacco	P4100 U66
10% Sheerweave 5000	Crepe/Toasted Coconut	R26 U16
10% Sheerweave 5000	Seaglass/Chardonnay	R26 U28
10% Sheerweave 5000	Seaglass/Crystal	R26 U29
10% Sheerweave 5000	Seaglass/Silver	R26 U24

Group 1 – Clutch Roller with Beaded Chain

• Blackout Solid (72")

WIDTH TO:	24"	30"	36"	48"	60"	72"	84"	96"	108"	120"	132"	144"
HEIGHT TO:												
36"	$93	95	97	115	129	149	177	208	221	240	251	268
48"	98	100	101	118	136	159	190	222	240	259	274	290
61"	109	112	114	125	145	169	202	237	258	278	297	316
72"	118	120	123	142	166	180	218	252	273	297	317	338
84"	121	125	127	151	176	192	231	268	293	316	339	360
96"	127	131	134	156	185	203	243	284	316	335	360	381
108"	134	136	139	166	195	214	255	301	327	356	380	410
120"	138	143	145	173	204	226	268	317	345	375	401	434
132"	144	149	151	182	215	236	281	331	360	394	423	455
144"	151	155	158	189	224	249	293	346	378	414	444	477

2-on-1 Shades Option: A Two-on-One shade is two shades under one continuous cassette valance. To price a 2-on-1, determine the price of each individual shade then add in the price of two individual cassette valances using the width of each shade. The total sum for the 2-on-1 shade is the sum of both shades and both cassettes. Clutch position only available on the outside of each shade (left shade - left side, right shade - right side).

NOTE: There is a 1/2" gap between the two shades. Please refer to the Product Size Specifications for individual shade sizes. Available with the Beaded Chain Clutch System & RemoteLift Motorization only.

Metal bead chain & Heat sealed hem are strongly recommended on shade size equal, wider than 108" or longer than 90", to improve the operation, and appearance of the shade, minimizing waviness, twisting, cupping & curling, especially on shades with railroaded material.

Spring assist clutch system (2-1/2" tube only) aids in raising heavy shades by reducing the pull force by up to 40%. Highly recommend on large shades greater than 44.4 SQ.FT. with shade width greater than 60". Please note Spring Assist is not available with cassettes or 3" fascia.

TouchLift Cordless Option Surcharge – $81

Small Cassette Valance Option Surcharge (with fabric insert) – White, Vanilla, Bronze, and Black

WIDTH TO:	24"	30"	36"	48"	60"	72"	84"	96"	108"	120"	132"	144"
	$54	60	67	78	89	101	112	125	140	155	166	175

Medium Cassette Valance Option Surcharge (with fabric insert) – White, Vanilla, Silver, Bronze, and Black

WIDTH TO:	24"	30"	36"	48"	60"	72"	84"	96"	108"	120"	132"	144"
	$59	67	76	91	103	114	121	134	146	159	172	185

Large Cassette Valance Option Surcharge (with fabric insert) – White, Vanilla, Silver, Bronze, and Black

WIDTH TO:	24"	30"	36"	48"	60"	72"	84"	96"	108"	120"	132"	144"
	$63	69	80	97	112	121	132	144	155	166	179	187

NOTE: Maximum overall width for 2-on-1 is 144" on all 3 cassette sizes.

Fascia Option Surcharge – White, Vanilla, Silver, Bronze, Black

WIDTH TO:	24"	30"	36"	48"	60"	72"	84"	96"	108"	120"	132"	144"
3" Flat	$53	56	61	70	78	89	99	111	122	135	148	163
4" Flat	57	61	67	74	87	101	114	126	139	151	164	179

Deluxe Valance Surcharge (standard height 3-5/8") Direction of fabric insert follows shade installed below. If valance is wider than material width, and shade below is not railroaded; valance will be made with a center seamed fabric insert. See deluxe valance section for more details.

WIDTH TO:	24"	30"	36"	48"	60"	72"	84"	96"	108"	120"	132"	144"
Fabric Insert	$29	32	35	41	48	51	53	59	64	65	71	76

Fabric Valance (standard height 6") For valances wider than material width, material will be railroaded. Includes all Roller Shade materials. (Non-railroaded with center seam available upon request.) See fabric valance section for more details.

WIDTH TO:	24"	30"	36"	48"	60"	72"	84"	96"	108"	120"	132"	144"
IB 4" & 6"	$83	89	98	109	121	141	161	185	205	225	245	265
IB 8" & 12"	91	101	109	143	162	177	201	226	248	274	297	323
OB 4" & 6"	$113	124	134	151	170	185	210	233	257	286	312	340
OB 8" & 12"	126	137	151	172	195	215	243	272	301	337	369	403

Tube Size Upgrade Surcharge – applies only if upgraded to a larger tube. This option only available for shades without top treatment.

TUBE SIZE:	1-1/2"	2"	2-1/2"	3-1/4"
	$36	69	108	120

See page 18 for motorization surcharges

Group 2 – Clutch Roller with Beaded Chain

- 7% Global Screen (118")
- Cararra (110")
- Cararra Blackout (110")*
- Hayworth (98")
- Scala Blackout (110")
- Sorrento (108")
- Sheerweave 7500R (118")
- Tundra (94")
- Tundra Blackout (94")

WIDTH TO:	24"	30"	36"	48"	60"	72"	84"	96"	108"	120"	132"	144"
HEIGHT TO:												
36"	$109	113	115	143	162	186	218	258	278	300	324	344
48"	119	123	126	157	177	207	244	287	315	340	368	389
61"	133	136	139	167	195	229	268	321	346	377	409	438
72"	148	151	154	194	230	251	296	352	385	419	450	487
84"	160	164	168	210	248	274	323	380	419	459	494	536
96"	170	174	177	227	267	297	348	413	452	495	534	580
108"	180	185	189	243	287	318	371	440	486	538	581	625
120"	191	195	200	259	307	337	399	472	524	576	623	674
132"	201	205	210	274	326	360	423	503	559	609	665	719
144"	212	218	222	288	342	383	446	532	593	649	710	759

2-on-1 Shades Option: A Two-on-One shade is two shades under one continuous cassette valance. To price a 2-on-1, determine the price of each individual shade then add in the price of two individual cassette valances using the width of each shade. The total sum for the 2-on-1 shade is the sum of both shades and both cassettes. Clutch position only available on the outside of each shade (left shade - left side, right shade - right side).

NOTE: There is a 1/2" gap between the two shades. Please refer to the Product Size Specifications for individual shade sizes. Available with the Beaded Chain Clutch System & RemoteLift Motorization only.

* Stainless steel bead chain is **REQUIRED** under skyline clutch when shade size is 108" x 90" and greater on patterns with *.

Heat sealed hem is strongly recommended on shade size equal, wider than 108" or longer than 90", to improve the appearance of the shade, minimizing waviness, twisting, cupping & curling, especially on shades with railroaded material.

Spring assist clutch system (2-1/2" tube only) aids in raising heavy shades by reducing the pull force by up to 40%. Highly recommend on large shades greater than 44.4 SQ.FT. with shade width greater than 60". Please note Spring Assist is not available with cassettes or 3" fascia.

TouchLift Cordless Option Surcharge – $81

Small Cassette Valance Option Surcharge (with fabric insert) – White, Vanilla, Bronze, and Black

WIDTH TO:	24"	30"	36"	48"	60"	72"	84"	96"	108"	120"	132"	144"
	$54	60	67	78	89	101	112	125	140	155	166	175

Medium Cassette Valance Option Surcharge (with fabric insert) – White, Vanilla, Silver, Bronze, and Black

WIDTH TO:	24"	30"	36"	48"	60"	72"	84"	96"	108"	120"	132"	144"
	$59	67	76	91	103	114	121	134	146	159	172	185

Large Cassette Valance Option Surcharge (with fabric insert) – White, Vanilla, Silver, Bronze, and Black

WIDTH TO:	24"	30"	36"	48"	60"	72"	84"	96"	108"	120"	132"	144"
	$63	69	80	97	112	121	132	144	155	166	179	187

NOTE: Maximum overall width for 2-on-1 is 144" on all 3 cassette sizes.

Fascia Option Surcharge – White, Vanilla, Silver, Bronze, Black

WIDTH TO:	24"	30"	36"	48"	60"	72"	84"	96"	108"	120"	132"	144"
3" Flat	$53	56	61	70	78	89	99	111	122	135	148	163
4" Flat	57	61	67	74	87	101	114	126	139	151	164	179

Deluxe Valance Surcharge (standard height 3-5/8") Direction of fabric insert follows shade installed below. If valance is wider than material width, and shade below is not railroaded; valance will be made with a center seamed fabric insert. See deluxe valance section for more details.

WIDTH TO:	24"	30"	36"	48"	60"	72"	84"	96"	108"	120"	132"	144"
Fabric Insert	$29	32	35	41	48	51	53	59	64	65	71	76

Fabric Valance (standard height 6") For valances wider than material width, material will be railroaded. Includes all Roller Shade materials. (Non-railroaded with center seam available upon request.) See fabric valance section for more details.

WIDTH TO:	24"	30"	36"	48"	60"	72"	84"	96"	108"	120"	132"	144"
IB 4" & 6"	$83	89	98	109	121	141	161	185	205	225	245	265
IB 8" & 12"	91	101	109	143	162	177	201	226	248	274	297	323
OB 4" & 6"	$113	124	134	151	170	185	210	233	257	286	312	340
OB 8" & 12"	126	137	151	172	195	215	243	272	301	337	369	403

Tube Size Upgrade Surcharge – applies only if upgraded to a larger tube. This option only available for shades without top treatment.

TUBE SIZE:	1-1/2"	2"	2-1/2"	3-1/4"
	$36	69	108	120

See page 18 for motorization surcharges

Group 3 – Clutch Roller with Beaded Chain

- 1% Toka (118")*
- 3% E Screen (122")
- 5% E Screen (122")
- 5% Sheerweave 2390 (126")
- 5% Sheerweave 4000 (126")*
- 10% E Screen (122")
- 10% Sheerweave 2360 (126")
- 10% Sheerweave 4100 (98")*
- Linview (122")**
- Montero (94")
- Santa Cruz (94")
- Santa Cruz Blackout (94")*
- Sheerweave 7250R (118")
- Sheerweave 7500 (118")
- Sheerweave 7750R (118")
- Sheerweave 7700R (118")*

WIDTH TO:	24"	30"	36"	48"	60"	72"	84"	96"	108"	120"	132"	144"
HEIGHT TO:												
36"	$118	120	123	158	173	207	241	286	310	338	362	387
48"	130	133	136	166	193	234	275	324	355	383	416	447
61"	144	148	151	181	210	260	304	363	397	436	468	505
72"	169	173	176	221	262	287	338	401	440	480	523	566
84"	177	183	187	242	287	317	369	437	486	530	575	623
96"	193	199	202	259	309	344	399	478	527	578	630	678
108"	205	210	215	277	334	371	437	512	568	624	684	740
120"	219	225	229	296	358	399	463	558	612	675	740	792
132"	231	238	243	315	380	428	502	595	655	724	792	852
144"	244	250	256	335	406	456	532	634	700	771	839	904

2-on-1 Shades Option: A Two-on-One shade is two shades under one continuous cassette valance. To price a 2-on-1, determine the price of each individual shade then add in the price of two individual cassette valances using the width of each shade. The total sum for the 2-on-1 shade is the sum of both shades and both cassettes. Clutch position only available on the outside of each shade (left shade - left side, right shade - right side).

NOTE: There is a 1/2" gap between the two shades. Please refer to the Product Size Specifications for individual shade sizes. Available with the Beaded Chain Clutch System & RemoteLift Motorization only.

***** Stainless steel bead chain is **REQUIRED** under skyline clutch when shade size is 108" x 90" and greater on patterns with *****.

Heat sealed hem is strongly recommended on shade size equal, wider than 108" or longer than 90", to improve the appearance of the shade, minimizing waviness, twisting, cupping & curling, especially on shades with railroaded material.

**Heat sealed hem is required beyond 120" x 120".

Spring assist clutch system (2-1/2" tube only) aids in raising heavy shades by reducing the pull force by up to 40%. Highly recommend on large shades greater than 44.4 SQ.FT. with shade width greater than 60". Please note Spring Assist is not available with cassettes or 3" fascia.

TouchLift Cordless Option Surcharge – $81

Small Cassette Valance Option Surcharge (with fabric insert) – White, Vanilla, Bronze, and Black

WIDTH TO:	24"	30"	36"	48"	60"	72"	84"	96"	108"	120"	132"	144"
	$54	60	67	78	89	101	112	125	140	155	166	175

Medium Cassette Valance Option Surcharge (with fabric insert) – White, Vanilla, Silver, Bronze, and Black

WIDTH TO:	24"	30"	36"	48"	60"	72"	84"	96"	108"	120"	132"	144"
	$59	67	76	91	103	114	121	134	146	159	172	185

Large Cassette Valance Option Surcharge (with fabric insert) – White, Vanilla, Silver, Bronze, and Black

WIDTH TO:	24"	30"	36"	48"	60"	72"	84"	96"	108"	120"	132"	144"
	$63	69	80	97	112	121	132	144	155	166	179	187

NOTE: Maximum overall width for 2-on-1 is 144" on all 3 cassette sizes.

Fascia Option Surcharge – White, Vanilla, Silver, Bronze, Black

WIDTH TO:	24"	30"	36"	48"	60"	72"	84"	96"	108"	120"	132"	144"
3" Flat	$53	56	61	70	78	89	99	111	122	135	148	163
4" Flat	57	61	67	74	87	101	114	126	139	151	164	179

Deluxe Valance Surcharge (standard height 3-5/8") Direction of fabric insert follows shade installed below. If valance is wider than material width, and shade below is not railroaded; valance will be made with a center seamed fabric insert. See deluxe valance section for more details.

WIDTH TO:	24"	30"	36"	48"	60"	72"	84"	96"	108"	120"	132"	144"
Fabric Insert	$29	32	35	41	48	51	53	59	64	65	71	76

Fabric Valance (standard height 6") For valances wider than material width, material will be railroaded. Includes all Roller Shade materials. (Non-railroaded with center seam available upon request.) See fabric valance section for more details.

WIDTH TO:	24"	30"	36"	48"	60"	72"	84"	96"	108"	120"	132"	144"
IB 4" & 6"	$83	89	98	109	121	141	161	185	205	225	245	265
IB 8" & 12"	91	101	109	143	162	177	201	226	248	274	297	323
OB 4" & 6"	$113	124	134	151	170	185	210	233	257	286	312	340
OB 8" & 12"	126	137	151	172	195	215	243	272	301	337	369	403

Tube Size Upgrade Surcharge – applies only if upgraded to a larger tube. This option only available for shades without top treatment.

TUBE SIZE:	1-1/2"	2"	2-1/2"	3-1/4"
	$36	69	108	120

See page 18 for motorization surcharges

Group 4 – Clutch Roller with Beaded Chain

- 1% E Screen (122")
- 1% Sheerweave 5000 (98")*
- 3% M Screen (122")
- 3% Sheerweave 2410 (126")*
- 3% Sheerweave 2703 (126")*
- 3% Sheerweave 4400 (126")*
- 3% Sheerweave 4903 (98")*
- 3% Sheerweave 5000 (98")*
- 3% T Screen (98")
- 5% M Screen Deco (98")
- 5% Sheerweave 2000 (126")
- 5% Sheerweave 2705 (126")*
- 5% Sheerweave 4500 (126")*
- 5% Sheerweave 5000 (98")*
- 7% Sheerweave 5000 (98")*
- 10% Sheerweave 5000 (98")*
- Avila R Blackout (118")
- Illusion (72")
- Linview Blackout (94")
- Sheerweave 7200R (118")

WIDTH TO:	24"	30"	36"	48"	60"	72"	84"	96"	108"	120"	132"	144"
HEIGHT TO:												
36"	$121	125	127	162	189	222	260	308	335	367	391	418
48"	134	136	139	171	210	252	298	352	386	415	452	513
61"	147	151	154	189	218	283	332	397	435	476	512	553
72"	173	176	181	237	285	315	370	440	481	530	574	625
84"	186	192	195	262	314	348	407	482	534	583	642	690
96"	201	205	210	281	339	380	440	528	587	649	695	757
108"	218	222	227	304	368	411	486	569	642	702	772	826
120"	231	237	242	326	395	442	521	615	690	751	826	892
132"	243	250	256	348	420	474	562	659	742	812	888	961
144"	257	263	269	370	450	507	597	703	785	863	955	1031

2-on-1 Shades Option: A Two-on-One shade is two shades under one continuous cassette valance. To price a 2-on-1, determine the price of each individual shade then add in the price of two individual cassette valances using the width of each shade. The total sum for the 2-on-1 shade is the sum of both shades and both cassettes. Clutch position only available on the outside of each shade (left shade - left side, right shade - right side).

NOTE: There is a 1/2" gap between the two shades. Please refer to the Product Size Specifications for individual shade sizes. Available with the Beaded Chain Clutch System & RemoteLift Motorization only.

***** Stainless steel bead chain is **REQUIRED** under skyline clutch when shade size is 108" x 90" and greater on patterns with *****.

Heat sealed hem is strongly recommended on shade size equal, wider than 108" or longer than 90", to improve the appearance of the shade, minimizing waviness, twisting, cupping & curling, especially on shades with railroaded material.

STRONGLY RECOMMEND Heat Sealed Hem as the Bottomrail option for R1015, R1019, R1020 under 5% Sheerweave 5000 to improve appearance of the shade, and minimizing waviness.

Spring assist clutch system (2-1/2" tube only) aids in raising heavy shades by reducing the pull force by up to 40%. Highly recommend on large shades greater than 44.4 SQ.FT. with shade width greater than 60". Please note Spring Assist is not available with cassettes or 3" fascia.

TouchLift Cordless Option Surcharge – $81

Small Cassette Valance Option Surcharge (with fabric insert) – White, Vanilla, Bronze, and Black

WIDTH TO:	24"	30"	36"	48"	60"	72"	84"	96"	108"	120"	132"	144"
	$54	60	67	78	89	101	112	125	140	155	166	175

Medium Cassette Valance Option Surcharge (with fabric insert) – White, Vanilla, Silver, Bronze, and Black

WIDTH TO:	24"	30"	36"	48"	60"	72"	84"	96"	108"	120"	132"	144"
	$59	67	76	91	103	114	121	134	146	159	172	185

Large Cassette Valance Option Surcharge (with fabric insert) – White, Vanilla, Silver, Bronze, and Black

WIDTH TO:	24"	30"	36"	48"	60"	72"	84"	96"	108"	120"	132"	144"
	$63	69	80	97	112	121	132	144	155	166	179	187

NOTE: Maximum overall width for 2-on-1 is 144" on all 3 cassette sizes.

Fascia Option Surcharge – White, Vanilla, Silver, Bronze, Black

WIDTH TO:	24"	30"	36"	48"	60"	72"	84"	96"	108"	120"	132"	144"
3" Flat	$53	56	61	70	78	89	99	111	122	135	148	163
4" Flat	57	61	67	74	87	101	114	126	139	151	164	179

Deluxe Valance Surcharge (standard height 3-5/8") Direction of fabric insert follows shade installed below. If valance is wider than material width, and shade below is not railroaded; valance will be made with a center seamed fabric insert. See deluxe valance section for more details.

WIDTH TO:	24"	30"	36"	48"	60"	72"	84"	96"	108"	120"	132"	144"
Fabric Insert	$29	32	35	41	48	51	53	59	64	65	71	76

Fabric Valance (standard height 6") For valances wider than material width, material will be railroaded. Includes all Roller Shade materials. (Non-railroaded with center seam available upon request.) See fabric valance section for more details.

WIDTH TO:	24"	30"	36"	48"	60"	72"	84"	96"	108"	120"	132"	144"
IB 4" & 6"	$83	89	98	109	121	141	161	185	205	225	245	265
IB 8" & 12"	91	101	109	143	162	177	201	226	248	274	297	323
OB 4" & 6"	$113	124	134	151	170	185	210	233	257	286	312	340
OB 8" & 12"	126	137	151	172	195	215	243	272	301	337	369	403

Tube Size Upgrade Surcharge – applies only if upgraded to a larger tube. This option only available for shades without top treatment.

TUBE SIZE:	1-1/2"	2"	2-1/2"	3-1/4"
	$36	69	108	120

See page 18 for motorization surcharges

Group 5 – Clutch Roller with Beaded Chain

- 1% Sheerweave 2701 (126")*
- 1% Sheerweave 4901 (98")*
- 3% Sheerweave 4600 (126")*
- 4% S Screen (122")*
- Astaire (94")
- Brilliance (118")
- Claudio (110")
- Claudio Blackout (110")
- Darien (90")
- Drizzle (94")
- Sheerweave 7450R (118")
- Sheerweave 7650R (118")
- World Textures 1 (78")

WIDTH TO:	24"	30"	36"	48"	60"	72"	84"	96"	108"	120"	132"	144"
HEIGHT TO:												
36"	$126	129	132	172	198	224	262	308	337	369	398	424
48"	142	145	148	182	223	252	299	357	389	427	463	495
61"	154	158	162	203	245	285	337	402	439	485	527	565
72"	172	176	180	236	285	317	377	448	492	542	588	634
84"	187	192	195	259	315	352	415	494	545	596	656	702
96"	202	207	212	283	342	385	454	539	599	662	714	777
108"	218	223	227	303	370	419	493	585	655	719	780	846
120"	233	239	243	327	399	450	533	636	704	772	845	908
132"	249	255	261	352	428	485	577	683	756	832	902	980
144"	264	270	277	374	457	519	609	727	812	886	970	1047

2-on-1 Shades Option: A Two-on-One shade is two shades under one continuous cassette valance. To price a 2-on-1, determine the price of each individual shade then add in the price of two individual cassette valances using the width of each shade. The total sum for the 2-on-1 shade is the sum of both shades and both cassettes. Clutch position only available on the outside of each shade (left shade - left side, right shade - right side).

NOTE: There is a 1/2" gap between the two shades. Please refer to the Product Size Specifications for individual shade sizes. Available with the Beaded Chain Clutch System & RemoteLift Motorization only.

***** Stainless steel bead chain is **REQUIRED** under skyline clutch when shade size is 108" x 90" and greater on patterns with *****.

Heat sealed hem is strongly recommended on shade size equal, wider than 108" or longer than 90", to improve the appearance of the shade, minimizing waviness, twisting, cupping & curling, especially on shades with railroaded material.

Spring assist clutch system (2-1/2" tube only) aids in raising heavy shades by reducing the pull force by up to 40%. Highly recommend on large shades greater than 44.4 SQ.FT. with shade width greater than 60". Please note Spring Assist is not available with cassettes or 3" fascia.

TouchLift Cordless Option Surcharge – $81

Small Cassette Valance Option Surcharge (with fabric insert) – White, Vanilla, Bronze, and Black

WIDTH TO:	24"	30"	36"	48"	60"	72"	84"	96"	108"	120"	132"	144"
	$54	60	67	78	89	101	112	125	140	155	166	175

Medium Cassette Valance Option Surcharge (with fabric insert) – White, Vanilla, Silver, Bronze, and Black

WIDTH TO:	24"	30"	36"	48"	60"	72"	84"	96"	108"	120"	132"	144"
	$59	67	76	91	103	114	121	134	146	159	172	185

Large Cassette Valance Option Surcharge (with fabric insert) – White, Vanilla, Silver, Bronze, and Black

WIDTH TO:	24"	30"	36"	48"	60"	72"	84"	96"	108"	120"	132"	144"
	$63	69	80	97	112	121	132	144	155	166	179	187

NOTE: Maximum overall width for 2-on-1 is 144" on all 3 cassette sizes.

Fascia Option Surcharge – White, Vanilla, Silver, Bronze, Black

WIDTH TO:	24"	30"	36"	48"	60"	72"	84"	96"	108"	120"	132"	144"
3" Flat	$53	56	61	70	78	89	99	111	122	135	148	163
4" Flat	57	61	67	74	87	101	114	126	139	151	164	179

Deluxe Valance Surcharge (standard height 3-5/8") Direction of fabric insert follows shade installed below. If valance is wider than material width, and shade below is not railroaded; valance will be made with a center seamed fabric insert. See deluxe valance section for more details.

WIDTH TO:	24"	30"	36"	48"	60"	72"	84"	96"	108"	120"	132"	144"
Fabric Insert	$29	32	35	41	48	51	53	59	64	65	71	76

Fabric Valance (standard height 6") For valances wider than material width, material will be railroaded. Includes all Roller Shade materials. (Non-railroaded with center seam available upon request.) See fabric valance section for more details.

WIDTH TO:	24"	30"	36"	48"	60"	72"	84"	96"	108"	120"	132"	144"
IB 4" & 6"	$83	89	98	109	121	141	161	185	205	225	245	265
IB 8" & 12"	91	101	109	143	162	177	201	226	248	274	297	323
OB 4" & 6"	$113	124	134	151	170	185	210	233	257	286	312	340
OB 8" & 12"	126	137	151	172	195	215	243	272	301	337	369	403

Tube Size Upgrade Surcharge – applies only if upgraded to a larger tube. This option only available for shades without top treatment.

TUBE SIZE:	1-1/2"	2"	2-1/2"	3-1/4"
	$36	69	108	120

See page 18 for motorization surcharges

Group 6 – Clutch Roller with Beaded Chain

- 1% Sheerweave 2500 (126")*
- Baroque (78")
- Brilliance Blackout (118")
- Fiona (78")
- Sheerweave 7400 (118")*
- Sheerweave 7600 (118")
- World Textures 1 Blackout (78")

WIDTH TO:	24"	30"	36"	48"	60"	72"	84"	96"	108"	120"	132"	144"
HEIGHT TO:												
36"	$132	134	137	179	209	244	293	346	379	413	448	480
48"	151	155	158	202	241	287	340	400	447	485	528	569
61"	165	169	173	223	269	327	385	462	511	556	604	653
72"	194	200	203	268	327	370	434	520	578	628	683	740
84"	215	220	225	298	362	408	484	580	633	698	769	827
96"	234	240	244	324	398	450	530	632	705	780	842	913
108"	254	260	265	353	436	489	578	689	771	847	920	993
120"	270	277	283	385	471	537	625	750	836	920	1005	1080
132"	290	297	303	411	504	573	673	808	889	990	1084	1178
144"	307	315	321	443	534	614	725	864	967	1064	1164	1267

2-on-1 Shades Option: A Two-on-One shade is two shades under one continuous cassette valance. To price a 2-on-1, determine the price of each individual shade then add in the price of two individual cassette valances using the width of each shade. The total sum for the 2-on-1 shade is the sum of both shades and both cassettes. Clutch position only available on the outside of each shade (left shade - left side, right shade - right side).

NOTE: There is a 1/2" gap between the two shades. Please refer to the Product Size Specifications for individual shade sizes. Available with the Beaded Chain Clutch System & RemoteLift Motorization only.

***** Stainless steel bead chain is **REQUIRED** under skyline clutch when shade size is 108" x 90" and greater on patterns with *****.

Heat sealed hem is strongly recommended on shade size equal, wider than 108" or longer than 90", to improve the appearance of the shade, minimizing waviness, twisting, cupping & curling, especially on shades with railroaded material.

Spring assist clutch system (2-1/2" tube only) aids in raising heavy shades by reducing the pull force by up to 40%. Highly recommend on large shades greater than 44.4 SQ.FT. with shade width greater than 60". Please note Spring Assist is not available with cassettes or 3" fascia.

TouchLift Cordless Option Surcharge – $81

Small Cassette Valance Option Surcharge (with fabric insert) – White, Vanilla, Bronze, and Black

WIDTH TO:	24"	30"	36"	48"	60"	72"	84"	96"	108"	120"	132"	144"
	$54	60	67	78	89	101	112	125	140	155	166	175

Medium Cassette Valance Option Surcharge (with fabric insert) – White, Vanilla, Silver, Bronze, and Black

WIDTH TO:	24"	30"	36"	48"	60"	72"	84"	96"	108"	120"	132"	144"
	$59	67	76	91	103	114	121	134	146	159	172	185

Large Cassette Valance Option Surcharge (with fabric insert) – White, Vanilla, Silver, Bronze, and Black

WIDTH TO:	24"	30"	36"	48"	60"	72"	84"	96"	108"	120"	132"	144"
	$63	69	80	97	112	121	132	144	155	166	179	187

NOTE: Maximum overall width for 2-on-1 is 144" on all 3 cassette sizes.

Fascia Option Surcharge – White, Vanilla, Silver, Bronze, Black

WIDTH TO:	24"	30"	36"	48"	60"	72"	84"	96"	108"	120"	132"	144"
3" Flat	$53	56	61	70	78	89	99	111	122	135	148	163
4" Flat	57	61	67	74	87	101	114	126	139	151	164	179

Deluxe Valance Surcharge (standard height 3-5/8") Direction of fabric insert follows shade installed below. If valance is wider than material width, and shade below is not railroaded; valance will be made with a center seamed fabric insert. See deluxe valance section for more details.

WIDTH TO:	24"	30"	36"	48"	60"	72"	84"	96"	108"	120"	132"	144"
Fabric Insert	$29	32	35	41	48	51	53	59	64	65	71	76

Fabric Valance (standard height 6") For valances wider than material width, material will be railroaded. Includes all Roller Shade materials. (Non-railroaded with center seam available upon request.) See fabric valance section for more details.

WIDTH TO:	24"	30"	36"	48"	60"	72"	84"	96"	108"	120"	132"	144"
IB 4" & 6"	$83	89	98	109	121	141	161	185	205	225	245	265
IB 8" & 12"	91	101	109	143	162	177	201	226	248	274	297	323
OB 4" & 6"	$113	124	134	151	170	185	210	233	257	286	312	340
OB 8" & 12"	126	137	151	172	195	215	243	272	301	337	369	403

Tube Size Upgrade Surcharge – applies only if upgraded to a larger tube. This option only available for shades without top treatment.

TUBE SIZE:	1-1/2"	2"	2-1/2"	3-1/4"
	$36	69	108	120

See page 18 for motorization surcharges

Group 7 – Clutch Roller with Beaded Chain

- Alexandria (78")
- Cusco (110")
- Moravia (96")
- Sunscreen (SW) 7000 (118")*
- World Textures 2 (80")
- World Textures 2 Blackout (80")

WIDTH TO:	24"	30"	36"	48"	60"	72"	84"	96"	108"	120"	132"	144"
HEIGHT TO:												
36"	$160	164	168	218	256	309	369	435	478	521	566	608
48"	185	191	194	247	298	361	430	506	564	613	669	720
61"	212	218	222	282	340	415	487	586	646	706	768	830
72"	249	255	260	339	413	469	552	659	733	800	870	943
84"	277	283	289	377	459	519	614	736	805	889	979	1055
96"	301	309	316	411	505	573	676	804	897	993	1072	1164
108"	326	334	341	448	553	623	735	878	983	1080	1173	1267
120"	349	357	365	488	598	686	799	956	1065	1173	1283	1381
132"	375	383	393	524	642	730	861	1030	1137	1264	1385	1503
144"	397	408	417	561	682	785	924	1104	1234	1358	1486	1619

2-on-1 Shades Option: A Two-on-One shade is two shades under one continuous cassette valance. To price a 2-on-1, determine the price of each individual shade then add in the price of two individual cassette valances using the width of each shade. The total sum for the 2-on-1 shade is the sum of both shades and both cassettes. Clutch position only available on the outside of each shade (left shade - left side, right shade - right side).

NOTE: There is a 1/2" gap between the two shades. Please refer to the Product Size Specifications for individual shade sizes. Available with the Beaded Chain Clutch System & RemoteLift Motorization only.

Heat sealed hem is strongly recommended on shade size equal, wider than 108" or longer than 90", to improve the appearance of the shade, minimizing waviness, twisting, cupping & curling, especially on shades with railroaded material.

* Stainless steel bead chain is **requlred** under skyline clutch when shade size is 108" x 90" and greater on patterns with *.

Spring assist clutch system (2-1/2" tube only) aids in raising heavy shades by reducing the pull force by up to 40%. Highly recommend on large shades greater than 44.4 SQ.FT. with shade width greater than 60". Please note Spring Assist is not available with cassettes or 3" fascia.

TouchLift Cordless Option Surcharge – $81

Small Cassette Valance Option Surcharge (with fabric insert) – White, Vanilla, Bronze, and Black

WIDTH TO:	24"	30"	36"	48"	60"	72"	84"	96"	108"	120"	132"	144"
	$54	60	67	78	89	101	112	125	140	155	166	175

Medium Cassette Valance Option Surcharge (with fabric insert) – White, Vanilla, Silver, Bronze, and Black

WIDTH TO:	24"	30"	36"	48"	60"	72"	84"	96"	108"	120"	132"	144"
	$59	67	76	91	103	114	121	134	146	159	172	185

Large Cassette Valance Option Surcharge (with fabric insert) – White, Vanilla, Silver, Bronze, and Black

WIDTH TO:	24"	30"	36"	48"	60"	72"	84"	96"	108"	120"	132"	144"
	$63	69	80	97	112	121	132	144	155	166	179	187

NOTE: Maximum overall width for 2-on-1 is 144" on all 3 cassette sizes.

Fascia Option Surcharge – White, Vanilla, Silver, Bronze, Black

WIDTH TO:	24"	30"	36"	48"	60"	72"	84"	96"	108"	120"	132"	144"
3" Flat	$53	56	61	70	78	89	99	111	122	135	148	163
4" Flat	57	61	67	74	87	101	114	126	139	151	164	179

Deluxe Valance Surcharge (standard height 3-5/8") Direction of fabric insert follows shade installed below. If valance is wider than material width, and shade below is not railroaded; valance will be made with a center seamed fabric insert. See deluxe valance section for more details.

WIDTH TO:	24"	30"	36"	48"	60"	72"	84"	96"	108"	120"	132"	144"
Fabric Insert	$29	32	35	41	48	51	53	59	64	65	71	76

Fabric Valance (standard height 6") For valances wider than material width, material will be railroaded. Includes all Roller Shade materials. (Non-railroaded with center seam available upon request.) See fabric valance section for more details.

WIDTH TO:	24"	30"	36"	48"	60"	72"	84"	96"	108"	120"	132"	144"
IB 4" & 6"	$83	89	98	109	121	141	161	185	205	225	245	265
IB 8" & 12"	91	101	109	143	162	177	201	226	248	274	297	323
OB 4" & 6"	$113	124	134	151	170	185	210	233	257	286	312	340
OB 8" & 12"	126	137	151	172	195	215	243	272	301	337	369	403

Tube Size Upgrade Surcharge – applies only if upgraded to a larger tube. This option only available for shades without top treatment.

TUBE SIZE:	1-1/2"	2"	2-1/2"	3-1/4"
	$36	69	108	120

See page 18 for motorization surcharges

Group 8 – Clutch Roller with Beaded Chain

- 4% Silver Screen (94")
- Flocke Blackout (94")*
- Jasper (110")
- Uptown (78")
- Uptown Room Darkening (78")

WIDTH TO:	24"	30"	36"	48"	60"	72"	84"	96"	108"	120"	132"	144"
HEIGHT TO:												
36"	$210	214	219	292	342	413	493	583	639	696	754	810
48"	241	247	252	330	397	482	574	675	752	815	888	958
61"	275	281	287	376	453	552	648	779	861	938	1019	1102
72"	322	331	338	452	550	624	733	878	973	1059	1155	1248
84"	356	365	374	502	612	687	813	978	1067	1179	1297	1395
96"	390	399	409	546	671	759	896	1064	1188	1315	1420	1541
108"	419	431	440	595	733	823	973	1162	1301	1430	1550	1674
120"	449	459	470	649	794	905	1055	1264	1409	1550	1695	1823
132"	482	494	506	695	849	964	1137	1362	1501	1670	1831	1985
144"	511	525	536	745	902	1035	1221	1459	1631	1794	1964	2138

2-on-1 Shades Option: A Two-on-One shade is two shades under one continuous cassette valance. To price a 2-on-1, determine the price of each individual shade then add in the price of two individual cassette valances using the width of each shade. The total sum for the 2-on-1 shade is the sum of both shades and both cassettes. Clutch position only available on the outside of each shade (left shade - left side, right shade - right side).

NOTE: There is a 1/2" gap between the two shades. Please refer to the Product Size Specifications for individual shade sizes. Available with the Beaded Chain Clutch System & RemoteLift Motorization only.

***** Stainless steel bead chain is **REQUIRED** under skyline clutch when shade size is 108" x 90" and greater on patterns with *****.

Heat sealed hem is strongly recommended on shade size equal to or greater than 108" x 90", to improve the appearance of the shade, minimizing waviness, twisting, cupping & curling, etc.

Spring assist clutch system (2-1/2" tube only) aids in raising heavy shades by reducing the pull force by up to 40%. Highly recommend on large shades greater than 44.4 SQ.FT. with shade width greater than 60". Please note Spring Assist is not available with cassettes or 3" fascia.

TouchLift Cordless Option Surcharge – $81

Small Cassette Valance Option Surcharge (with fabric insert) – White, Vanilla, Bronze, and Black

WIDTH TO:	24"	30"	36"	48"	60"	72"	84"	96"	108"	120"	132"	144"
	$54	60	67	78	89	101	112	125	140	155	166	175

Medium Cassette Valance Option Surcharge (with fabric insert) – White, Vanilla, Silver, Bronze, and Black

WIDTH TO:	24"	30"	36"	48"	60"	72"	84"	96"	108"	120"	132"	144"
	$59	67	76	91	103	114	121	134	146	159	172	185

Large Cassette Valance Option Surcharge (with fabric insert) – White, Vanilla, Silver, Bronze, and Black

WIDTH TO:	24"	30"	36"	48"	60"	72"	84"	96"	108"	120"	132"	144"
	$63	69	80	97	112	121	132	144	155	166	179	187

NOTE: Maximum overall width for 2-on-1 is 144" on all 3 cassette sizes.

Fascia Option Surcharge – White, Vanilla, Silver, Bronze, Black

WIDTH TO:	24"	30"	36"	48"	60"	72"	84"	96"	108"	120"	132"	144"
3" Flat	$53	56	61	70	78	89	99	111	122	135	148	163
4" Flat	57	61	67	74	87	101	114	126	139	151	164	179

Deluxe Valance Surcharge (standard height 3-5/8") Direction of fabric insert follows shade installed below. If valance is wider than material width, and shade below is not railroaded; valance will be made with a center seamed fabric insert. See deluxe valance section for more details.

WIDTH TO:	24"	30"	36"	48"	60"	72"	84"	96"	108"	120"	132"	144"
Fabric Insert	$29	32	35	41	48	51	53	59	64	65	71	76

Fabric Valance (standard height 6") For valances wider than material width, material will be railroaded. Includes all Roller Shade materials. (Non-railroaded with center seam available upon request.) See fabric valance section for more details.

WIDTH TO:	24"	30"	36"	48"	60"	72"	84"	96"	108"	120"	132"	144"
IB 4" & 6"	$83	89	98	109	121	141	161	185	205	225	245	265
IB 8" & 12"	91	101	109	143	162	177	201	226	248	274	297	323
OB 4" & 6"	$113	124	134	151	170	185	210	233	257	286	312	340
OB 8" & 12"	126	137	151	172	195	215	243	272	301	337	369	403

Tube Size Upgrade Surcharge – applies only if upgraded to a larger tube. This option only available for shades without top treatment.

TUBE SIZE:	1-1/2"	2"	2-1/2"	3-1/4"
	$36	69	108	120

See page 18 for motorization surcharges

LARGE DECORATIVE PATTERN FABRICS

- Fabric Repeat

Fiona:
Approximate Repeat Size: 8.4" x 8.4"

Baroque:
Approximate Repeat Size: 12.6" x 25.4"

Alexandria:
Approximate Repeat Size: 12.6" x 25.4"

- These patterns will not be matched on shades ordered together, or with side by side shades. Pattern will not be symmetrically centered on the shade. The way the material comes off the roll is the way the shade will be made.

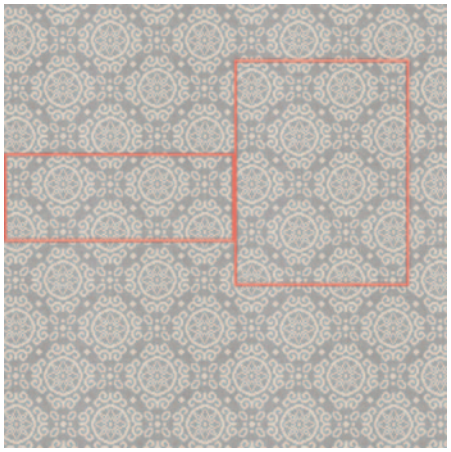

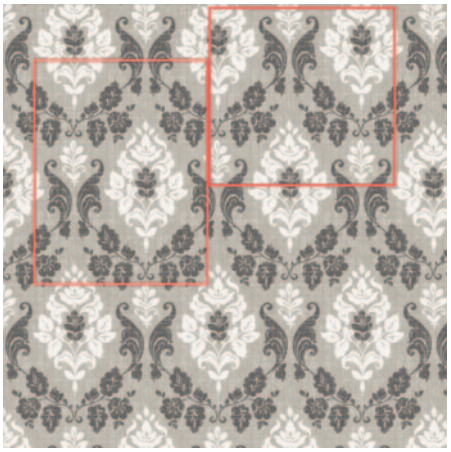

TUBE SIZE UPGRADE

Tube upgrade to larger size is available for shades without top treatment to best match the overall appearance for side by side shades or varying shade size in one room. Based on the shade size and properties of the overall shade, tube size is determined and defaulted. Please note, upgrade can only be upgrade to larger tube size available under each operating system. Determine the tube size on the largest shade, base on that select the upgrade tube size for the rest of the side by side shade(s).

		Available Tube Sizes				
Operating System		**1-1/8"**	**1-1/2"**	**2"**	**2-1/2"**	**3-1/4"**
Clutch Lift	**Skyline**	X	X	X	X	-
	R Series	X	X	X	-	-
TouchLift		-	X	-	-	-
PowerWand, Simplicity & RemoteLift Motorization		-	X	-	-	-
Hardwired Motorization	**Sonesse 30 (ST30)**	-	X	-	-	-
	Sonesse 50 (ST50)	-	-	X	X	X
	Sonesse 50 Ultra Quiet (ST50R)	-	-	X	X	X

SIMPLICITY RECHARGEABLE AND POWERWAND OPTIONS: EXTRA CHARGE – SPECIFY ON ORDER

USE APPROPRIATE CLUTCH ROLLER GRID FOR SHADE PRICE, THEN ADD EXTRA CHARGE(S) BELOW.

- Simplicity Rechargeable Motor ..... **add $237 per motor**
  - – 5 Channel Remote Control (Black Part #CS5138 or White Part #CS5138W) ..... **add $36 each**
  - – Solar Panel (Part #CS52096 Solar Panel & mounting brackets) (Part #02-70-9021 Mounting bracket screws) ..... **add $131 each**
- PowerWand™ ..... **add $99 per shade**
  - – PowerWand™ Options (must be specified):
    1) Control Side (Left or Right)
    2) Wand Color (Black or White)
    3) Wand Length: 1 foot (12"), 2 feet (24"), 3 feet (36"), 4 feet (48"), 5 feet (60")
- Plug-in Charger (Can be used for both Simplicity Rechargeable and PowerWand) ..... Part #CS5199 ..... **add $27 each**

REMOTELIFT OPTIONS: EXTRA CHARGE – SPECIFY ON ORDER (Must select RemoteLift power source* when ordering)

USE APPROPRIATE CLUTCH ROLLER GRID FOR SHADE PRICE, THEN ADD REMOTELIFT EXTRA CHARGE(S) BELOW.

- Radio Frequency (RF) RemoteLift Rollup 28 Wirefree (R28WF) Motorization Upgrade ..... **add $268 per shade**
- Radio Frequency (RF) RemoteLift Sonesse Ultra 30 Wirefree (ST30WF) Li-ion Motorization Upgrade ..... **add $291 per shade**

- Radio Frequency (RF) Remote Control – 1 Channel ..... Part #RC445069 ..... **add $84 each**
- Radio Frequency (RF) Remote Control – 5 Channel ..... Part #RC445079 ..... **add $108 each**
- Radio Frequency (RF) Remote Control – 16 Channel (available as a separate part order only) ..... Part #1811081 ..... **add $390 each**
- Radio Frequency (RF) Wireless Wall Switch – 1 Channel ..... Part #RC445135 ..... **add $212 each**
- Radio Frequency (RF) Wireless Wall Switch – 5 Channel ..... Part #RC445136 ..... **add $212 each**
- Radio Frequency (RF) Programmable Timer – 1 Channel ..... Part #1805237A ..... **add $342 each**
- RTS – Smoove 1 RTS ..... Part #1811533 ..... **add $111 each**
- RTS – myLink RTS interface ..... Part #1811403 ..... **add $319 each**

Rollup 28 Wirefree (R28WF)*

- Radio Frequency (RF) Reloadable Single Battery Wand** ..... Part #KITRWR ..... **add $116 each**
- Radio Frequency (RF) Reloadable Dual Battery Wand** ..... Part #KITRDWR ..... **add $233 each**
- Dual Wand Y harness (required) ..... Part #9018625 ..... **add $9 each**
- Radio Frequency (RF) Transformer ..... Part #1822445 ..... **add $117 each**
- Radio Frequency (RF) Battery Wand Extension Wire – 10" ..... Part #9018623 ..... **add $9 each**
- Radio Frequency (RF) Battery Wand Extension Wire – 48" ..... Part #9016736 ..... **add $12 each**
- Radio Frequency (RF) Battery Wand Extension Wire – 96" ..... Part #9018624 ..... **add $17 each**
- Radio Frequency (RF) Lithium Batteries (Reloadable Wand – 8 each) ..... Part #9014834 ..... **add $38 each**

- Solar Recharge Kit ..... Part #9019034 ..... **add $209 each**
  (**batteries are included if option is selected under a shade, not included if ordered as a kit alone.**)
  (Includes solar panel, 10" Y harness, 12v reloadable battery tube, tube mounting clips, glass mount adhesive tape, solar panel mounting brackets – 4 qty.)
- NiMh Rechargeable Batteries (quantity of 10) ..... Part #9018621 ..... **add $59 each**
- Plug-in AC Battery Rapid Charger (for solar recharge kit only) (includes 12" cable) ..... Part #9018620 ..... **add $205 each**
- 48" Extension Cable for Y Harness ..... Part #9016736 ..... **add $14 each**

Sonesse Ultra 30 Wirefree (ST30WF) RTS Li-ion

- Plug-in Charger ..... Part #9025166 ..... **add $33 each**
- 94.5" Extension Cable ..... Part #9021016 ..... **add $11 each**
- 7.87" Extension Cable ..... Part #9021131 ..... **add $8 each**

HARDWIRED MOTORIZATION

Hardwired Motorization is available with a variety of lifting capacities, “quietness", power options and control options. Please see separate Hardwired Motorization Price List & Product Info Guide for complete details.

MOTOR READY

Dealer’s Own Motorization
The factory will provide roller shade materials ready for Dealer or Automation Companies to motorize. These shades styles are also known to some as Motor Ready.

These shade materials are produced as follows:

Motor Ready Shades. Motor Ready shades are **PRICED** and **MANUFACTURED** to the “**net width**" specified by dealer. (Dealer is required to make all necessary width deductions to allow for motor and brackets being used, and order under **Mount Type: Exact End to End Mount.**)

- Factory automatically adds extra material length required for tube wrap at no additional charge.
- Dealer specifies tube size. (1-1/2" extruded ribbed, and 2" smooth at no additional charge. 2-1/2" extruded ribbed and 3-1/4" extruded ribbed tubes are available with applicable surcharge. (Contact customer service for surcharge information.)
- Motor Ready shades do not include notch on the tube, clutch, idler end, crown/drive, and brackets.
- Motor Ready comes with only tube, fabric and bottom rail with end caps.

Clutch Lift Continuous Control
Features continuous bead chain. When chain is pulled, the clutch rotates the roller tube lifting and lowering the shade. Chain bead stops set at upper and lower shade limits.

Defaulted Beaded Loop Length

SHADE HEIGHT	LOOP DROP
12" to 15 7/8"	2/3 of shade height
16" to 29 7/8"	3/4 of shade height
30" - 35 7/8"	24" loop
36" - 41 7/8"	30" loop
42" - 47 7/8"	36" loop
48" - 53 7/8"	42" loop
54" - 59 7/8"	48" loop
60" - 65 7/8"	54" loop
66" - 71 7/8"	60" loop
72" - 77 7/8"	66" loop
78" - 89 7/8"	72" loop
90" - 101 7/8"	84" loop
102" - 113 7/8"	96" loop
114 - above	3/4 of shade height

Note: Custom beaded loop lengths may be ordered, but they must be LONGER than the standard loop size for a given shade height (as indicated above). Loop lengths cannot be made shorter than the standard size because the shade will not fully operate through the entire range.

Plastic bead chains are available in the following colors:
• Black • Bronze • Vanilla • White

Metal bead chain available at no additional charge in the following colors/finishes:
• Antique Brass • Oil Rubbed Bronze • Stainless Steel
• Nickel • White • Black

NOTE: We strongly recommend that all shades over 108" x 90" be ordered with a metal or stainless steel chain.

Stainless steel chain is REQUIRED on some heavy materials with shade size equal or greater than 108" x 90" under skyline clutch, please refer to price pages for detail.

TouchLift Cordless
- Shade lowers manually by hand
- Shade slowly raises automatically with slight pull on the bottom hem
- Shade comes pre-assembled on a mounting bar/rail. The rail and mounting brackets are available in white or black.
- Minimum shade width – 18"
- Minimum shade height – 24"
- Maximum shade size – **see Product Size Specifications – TouchLift** section for detail.

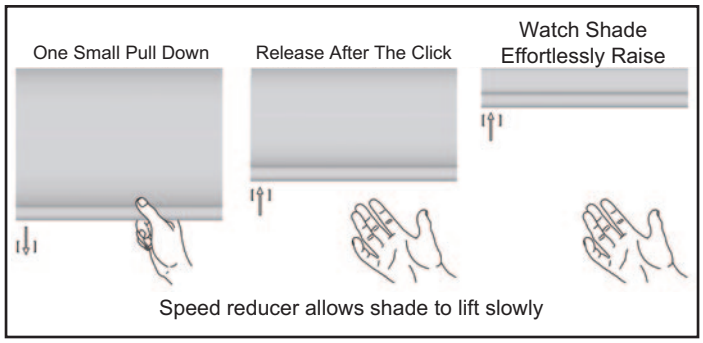

Inside/Ceiling Mount **Outside Mount**

NOTE: TouchLift Handle only available with Fabric Wrapped Rail

PowerWand™ Motorization

- PowerWand™ Rechargeable option is an easy, cord free motorized operation for the budget savvy homeowner.

PowerWand™ Rechargeable Shades Operation

- Press the up or down button on the pendant to raise or lower the shading to your desired position. No programming is required with PowerWand™ as upper and lower limits are set at the factory. If desired, upper and lower limits can be adjusted in the field.
- Please refer to the installation instructions for instructions on resetting the upper and lower limits and setting a favorites position can be programmed on-site.

PowerWand™ Appearance

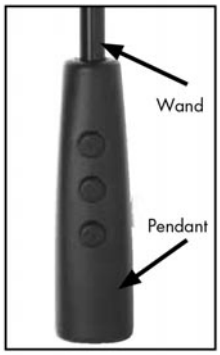

- The PowerWand™ Rechargeable wand and pendant is attached to the head rail and requires no additional mounting.
- The wand and pendant hangs down the front of the shades from the head rail.
- Pendant is 2-1/2” long.
- The pendant does not need to be mounted to the wall to operate the shade.

PowerWand™ Options

- Wand is available in Black or White (there is no default)
- Wand is available in 1 foot increments from 1 to 5 feet (there is no default)
- Wand is available on either the right or left side of the shade (there is no default)

White

Black Shown with Plug-In Charger

PowerWand™ Battery Life

- The battery life will vary based on the type of window covering selected, the size and weight of the window covering and the number of times you operate the blind on a daily basis.

Battery Charger

- 8.4 Volt charger requires a standard power outlet to recharge the battery. The charger must be specified when ordering the PowerWand motorization option. The charger plugs into the charger port on the side of the pendant. The charger is black and comes with a 156” wire. The dimensions are 1” wide x 2-1/2” length x 1-3⁄4” deep.

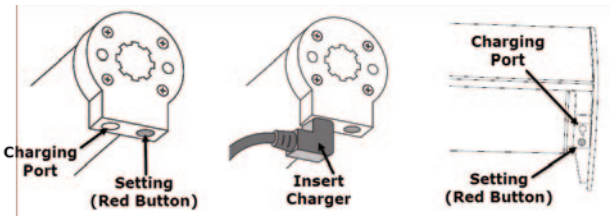

Simplicity Rechargeable

- The Rechargeable Simplicity motor program features an integrated rechargeable lithium ion battery in the motor casing and is fully concealed by the inner tube.
- Rechargeable battery is included with the motor. The average battery charge will last 6-12 months based on an average sized shade raised and lowered once per day. The life of the battery charge will vary based on the type of window covering selected, the size and weight of the window covering and the number of times the shade is operated on a daily basis. The battery can be recharged up to 500 times. It takes approximately 5 hours to recharge the motor when fully depleted.

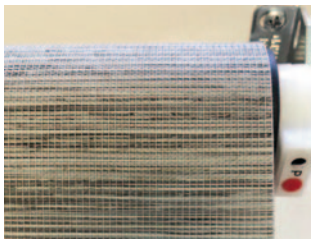

Battery Charger

- An 8.4 Volt charger requires a standard power outlet to recharge the battery. The charger must be specified when ordering Simplicity Rechargeable Motorized shade option. The charger plugs into the charging port of the motor. The charger is black and comes with a 156” wire. The dimensions are 1” wide x 2-1/2” length x 1-3/4" deep. Sold separately.

Solar Panel Recharge Option

- Plugs in to any Simplicity Rechargeable motorized shading (does not work with PowerWand). Provides constant trickle charge to 7.4v Li-ION Rechargeable battery packs. Does not require direct sunlight, but performs best in regular direct sunlight applications. Will prolong the life of the charge of the 7.4v rechargeable battery packs, and in some applications will maintain charge indefinitely.

- Life of charge is subject to application variables such as, size and weight of shade, frequency of use, amount of direct sunlight exposure, etc.

5 Channel Remote

- The remote can operate up to five shadings simultaneously, individually or in groups. Remotes and holders are available in white or black. The remote comes with a holder which can be mounted to a wall for easy storage. The range of the remote is approximately 80 feet.

White
(Part #CS5138W)

Black
(Part #CS5138)

Please Note:

- Not all motors run at the same rate of speed.
- Simplicity motors have a “Favorites” position setting. To set a “Favorites” position, follow instructions provided in the installation instructions.
- For best reception, it is highly recommended to keep the antenna of the motor exposed without come into contact with the metal to reduce interference of the reception.

REMOTELIFT™ MOTORIZATION: OVERVIEW

With RemoteLift™ motorized shades, enjoy a better quality of life and have more time to enjoy life's daily pleasures. At the touch of a button, window coverings can be instantly adjusted to changing activities or the varying sun conditions.

An ideal solution is to manage glare with a RemoteLift hand-held remote control. At the simple touch of a button, shades will open or close to adjust to the changing sunlight in a room.

RemoteLift Radio Frequency (RF) motorized shades provide ultra-quiet operation. The system can operate shades from virtually anywhere in the house without direct line of sight. Similar to how a garage door opener operates, radio signals travel through walls and make it possible to control multiple coverings throughout the home alone or as a group. The RF system is also available in a 5 or 16 channel version. The multi-channel RF system allows for independent control of individual shades and/or group control.

RemoteLift motorization systems provide many benefits, such as improving energy efficiency, providing easily controllable privacy and also enhancing home security.

The RemoteLift RF timer allows users to program specific times of the day to automatically adjust shades in different areas of the house, protecting interiors from the fading effects of direct sunlight. This feature provides added security to an unoccupied home by creating a lived in look even while homeowners are away on vacation.

The battery powered RemoteLift RF wireless wall switch allows shades to be controlled when entering or exiting a room, just like the lights. The switch may be seamlessly installed without wiring next to any light switch or stand alone, and is never misplaced. This one touch privacy helps create the ideal environment whether preparing for a bath, relaxing in bed or enjoying time with the family at home.

The Smoove® 1 RTS surface-mounted wall switch avoids cutting into drywall. This single channel, battery-operated solution is easy to install, and doesn't require an electrician. It's an intuitive, surface mount control.

The myLink™ RTS Smartphone and Tablet Interface is a WiFi to Radio Technology Somfy® (RTS) bridge that can control up to 5 channels of RTS motorized products using the Somfy myLink apps for iOS and Android devices. Through the app, users can send immediate RTS commands, create scenes (a group of motorized products working together) and schedules (timed events). Users may access their myLinks from anywhere with the app's remote access feature. Though the myLink is a single-zone controller, multiple myLinks can be joined within the same system for multi-zone control.

RemoteLift motorized shades are powered by Somfy, an industry leader in automated window coverings. All motorized products are backed by a 5 year warranty.

REMOTELIFT™ MOTORIZATION: FEATURES & OPTIONS

REMOTELIFT™ MOTORIZATION FEATURES:

- Advanced motor
- Quiet operation
- Motor is fully enclosed within the headrail
- Installs with standard installation hardware
- RF motor is programmable

Please Note:

- The power source must be selected when ordering. Available under Skyline, not R series
- For best reception, it is highly recommended to keep the antenna of the motor exposed without come into contact with the metal to reduce interference of the reception.

Rollup 28 Wirefree (R28WF)

Note: The power source must be selected when ordering. The options are: reloadable single or dual battery wand, and the plug-in transformer.

Radio Frequency (RF) RemoteLift Motor Motor (Part #1240292) Crown (Part #9018475) Drive (Part #9018477)	• Fully concealed motor unit • Flexible and programmable operation • 12 Volt System • Capable of lifting shades up to 8 LBS
Single Battery Wand (reloadable) and Installation Clips Wand (Part #RC445268) Clips (Part #9013263) 8 AA Lithium Batteries (not shown) (Part #9014834) Note: Battery wand length with the tip of the cord is 17 3/4". Length of the cord is 6".	• On initial shade orders, the reloadable wand comes with 8 AA lithium batteries • Comes with mounting installation clips • For parts ordering the reloadable wand INCLUDING 8 AA lithium batteries, order both part #s • Replacement 8 AA lithium batteries may also be ordered separately
Optional, Dual Battery Wand (reloadable) and Installation Clips (Kit: Part #KITRDW) (Clips: Part #9013263) (Y-Harness: Part #9018625) (Y-Harness Ext. Cable: Part #9016736)	• On initial shade orders, the reloadable wands come with 16 AA lithium batteries • Combines (reloadable) Single Battery Wands for added lifting capacity and/or extended life • Comes with mounting installation clips
Transformer 10' Cable (Part #1822445)	• Plug-in operation, no batteries required • Works in standard wall outlet (10' wire length)
Battery Wand Extension Cables Color: White (10" Cable: Part #9018623) (48" Cable: Part #9016736) (96" Cable: Part #9018624)	• Available in 10", 48" and 96" • Allows battery wand installation away from headrail
WireFree™ Solar Pack Kit – Batteries NOT included (Part #9019034) Photovoltaic Panel "Y" Harness Battery + Battery Tube (Part #9018621) **Accessories** Plug-in AC battery (Part #9018620) rapid charger (required for charging battery prior to installation)	• Uses sunlight to power a motorized shade. • Easy to install. Low profile, easy to conceal. • Solar Recharge Kit (**batteries NOT included if ordered as stand alone kit**) (Part #9019034) – Includes solar panel, 10" Y harness, 12v reloadable battery tube, tube mounting clips, glass mount adhesive tape, solar panel mounting brackets – 4 qty.) • NiMh Rechargeable Batteries (quantity of 10) (Part #9018621) • Plug-in AC Battery Rapid Charger (for solar recharge kit only) (includes 12" cable) (Part #9015781) • 48" Extension Cable for Y Harness (Part #9016736)

Sonesse Ultra 30 Wirefree RTS Li-ion (ST30WF)

Note: Charger is required to charge the shade.

Motor (Part #:1003310SMFY) Crown & Drive (Part #: 9020674)	• Li-ion Battery, no external batteries, no electrical wires nor cords. • Ultra Quiet 37dBA (designed for silence) • Soft Start and Soft Stop • Battery power indicator • Adjustable Speed (10 to 28rpm) • 2 Nm, 12V 2600mAh, 433.42 MHz • 5 year warranty (2-year limited warranty on battery)
13Vdc -purchased separately Plug- in Charger (Part #9025166)	• Easy recharging • Charging time <4, 5 hours
Extension Cable for charging (94.5" Cable: Part #9021016) (7.87" Cable: Part #9021131)	• Available in 7.84" and 94.5"

Somfy RTS Compatible Accessories

Radio Frequency (RF) Remote Control (must order separately) Color: 2 tone white and gray 2 Types: programmable 1-channel and programmable 5-channel (1-Channel: Part #RC445069) (5-Channel: Part #RC445079) (16-Channel: Part #1811081 – available as a separate part order only)	• Controls shade operation • Programmable features • Easy shade positioning up to 90 feet away • 5-channel remote allows for multiple and independent shade operation 5-channel remote programming can be done by special request prior to shipping. Contact customer service with your programming instructions otherwise all shades will be programmed on channel 1.
Wireless Wall Switch Color: white 2 Types: programmable 1-channel and 5-channel (1 Channel: Part #RC445135) (5 Channel: Part #RC445136)	• Control wireless operation from the wall up to 90 feet away • Works like turning a light on/off
Programmable Timer 1 Type: programmable 1-channel (Part #1805237A)	• Program operation based on pre-set times • Excellent home security feature
Smoove 1 RTS – single channel surface mount control Color: Pure (Part #1811533)	• Battery operated • Tactile buttons for UP/DOWN/MY/STOP control • LED for visual feedback
myLink Interface Color: White (Part #1811403)	• Smartphone and Tablet Interface 120V AC • App Control • Remote Access • Compatible and controls all Radio Technology Somfy RTS products. • Can control up to 5 channels of RTS motorized products using myLink apps for iOS and android devices.

CASSETTES

Large Cassette Valance
- Available with Clutch Control, TouchLift Cordless and Motorization
- Features a shade fabric insert. Insert fabric will run the same direction as the shade fabric.
- Dimensions – 3-7/8" high x 3-7/8" deep
- Colors – White, Vanilla, Silver, Bronze, Black

Medium Cassette Valance
- Available with Clutch Control, TouchLift Cordless, and Motorization
- Features a shade fabric insert. Insert fabric will run the same direction as the shade fabric.
- Dimensions – 3-1/8" high x 3-3/4" deep
- Colors – White, Vanilla, Silver, Bronze, Black

Small Cassette Valance
- Available with Clutch Control
- Features a shade fabric insert. Insert fabric will run the same direction as the shade fabric.
- Dimensions – 2-1/2" high x 2-1/2" deep
- Colors – White, Vanilla, Bronze, Black

FASCIAS

3" and 4" Fascia
- Available with Clutch Control and Motorization
- Flat Style Only
- RemoteLift battery wands must be externally mounted to window sill or wall
- Colors – White, Vanilla, Silver, Bronze, Black

Dimensions –
<u>Skyline</u>
3" – 3-3/8" high x 3-1/8" deep
4" – 3-7/8" high x 4-1/8" deep

<u>R-Series</u>
3" – 3" high x 3-1/16" deep
4" – 4" high x 4-1/16" deep

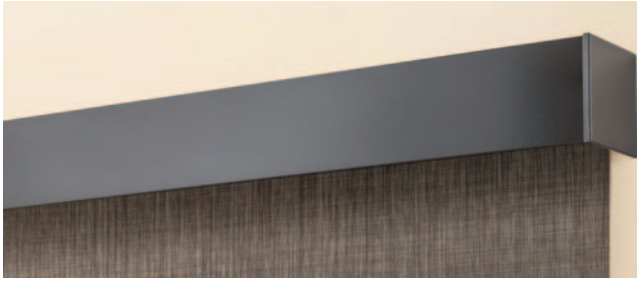

Flat Style (3" and 4") painted finish

3" Fascia

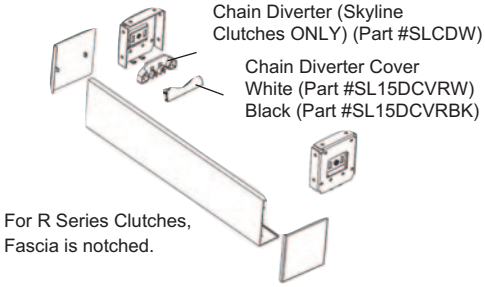

4" Fascia

Fascia clip is required under Skyline.

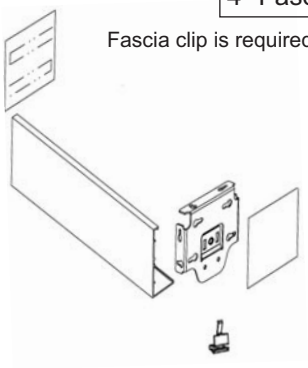

DELUXE VALANCE

Optional Deluxe Valance has clear edge groovers to hold the coordinating fabric in place.

- For inside mount no returns, the factory deducts 1/8"
- For inside mount with returns, the factory adds 1-1/4"
- For outside mount no returns, the factory adds 1"
- For outside mount with returns, the factory adds 2-3/8"

Outside Mount:
Returns length only available in 3-1/2"

Inside Mount:
Default No returns

Custom size returns available:
Minimum return length 2-1/4"
Maximum return length 3-1/2"

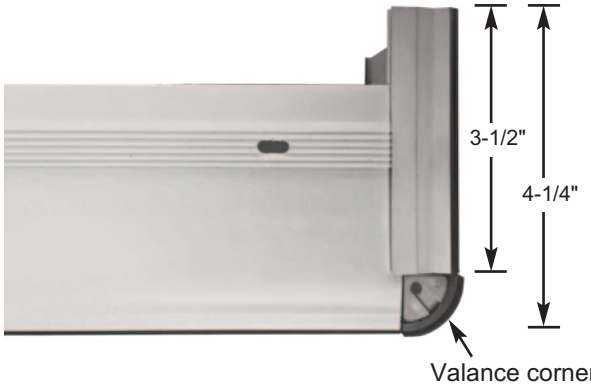

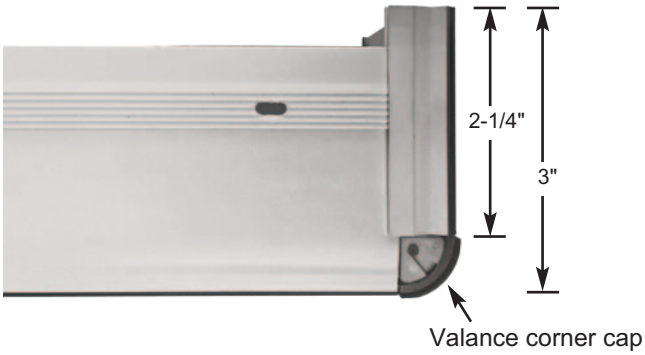

Note: When ordering returns, valance corner cap adds 3/4" to the valance return depth.

Deluxe Valance Insert fabric will run the same direction as the shade fabric. If valance is wider than material width, and shade fabric is not railroaded; insert fabric will have a center seam.

WIDTH TO:	24"	30"	36"	48"	60"	72"	84"	96"	108"	120"	132"	144"
Fabric Insert	$29	32	35	41	48	51	53	59	64	65	71	76

FINISHED DIMENSIONS

Valance Drop Size	3-5/8"
Valance Return Size (Outside Mount)	3-1/2"

Spec:	
Minimum Width	12"
Maximum Width	144"

Inside (IB/IS) Mount	
Valance with no returns	Ordered width - 1/8”
Valance with returns	Ordered width + 1-1/4”
Outside (OB/OS)	
Valance with no returns	Ordered width + 1"
Valance with returns	Ordered width + 2 3/8"
End to End (Net Size) Mount	
Valance with no returns	Ordered width
Valance with returns	Ordered width

FABRIC VALANCE

- Please refer to **Collection Information** section for detail.
- Minimum Width – 12"
- Standard Valance Height – 6"
- Optional Valance Height – 4", 8" & 12"
- One standard return size for Outside Mount – 3 3/4"
- No returns under Inside Mount
- Not all patterns are available. Refer to **Collection Information** section for availability.

Inside Mount

- 3/4" Dust Cap Depth. Mounting depth requirement: 3/4" plus inside mount shade clearance.

Outside Mount with returns

Same specifications as noted to the left

- Outside mount Dust Cap Depth – 3 3/4"
- Outside Mount Fabric Valance (without shades) – finished size measures 1 1/2" wider than ordered width.

Fabric Valance – For valances wider than material width, material will be railroaded. Includes all Roller Shade materials. (Non-railroaded with center seam available upon request.)

WIDTH TO:	24"	30"	36"	48"	60"	72"	84"	96"	108"	120"	132"	144"
IB 4" & 6"	$83	89	98	109	121	141	161	185	205	225	245	265
IB 8" & 12"	91	101	109	143	162	177	201	226	248	274	297	323
OB 4" & 6"	$113	124	134	151	170	185	210	233	257	286	312	340
OB 8" & 12"	126	137	151	172	195	215	243	272	301	337	369	403

DUAL MOUNT SHADE

Brackets
(Part #SLB660DBVW – white)
(Part #SLB660DBVBK – black)

Vertical Mount

- Recommended Inside Mount Only
- Approx. 3" minimum mounting depth for flush mount
- 2" minimum mounting depth for Ceiling Mount
- 5-3/4" Bracket height
- Roll Configuration: Reverse (top) / regular (bottom)
  – When combining a Sheer material and a Room Darkening/Blackout, we recommend the Room Darkening/ Blackout as the regular roll on the bottom closest to the window for better light control.
- Available with Clutch Lift, RF R28 RemoteLift, ST-30 Motorized
- Available as side-by-side (butting shades) with pin-end to clutch end
- Fabric Valances are available and create a beautifully finished treatment – see Fabric Valance section for detail
- Cassette, Fascia, Pocket, and Deluxe Valance are not available
- **Maximum size 84" x 96"**

POCKET HEADRAIL, SIDE AND BOTTOM CHANNELS

Pocket Headrail

The aluminum pocket headrail (4-1/8" high x 4-1/2" deep) with closure and end plates conceals and protects the shade mechanism. Available in white and anodized aluminum finishes.

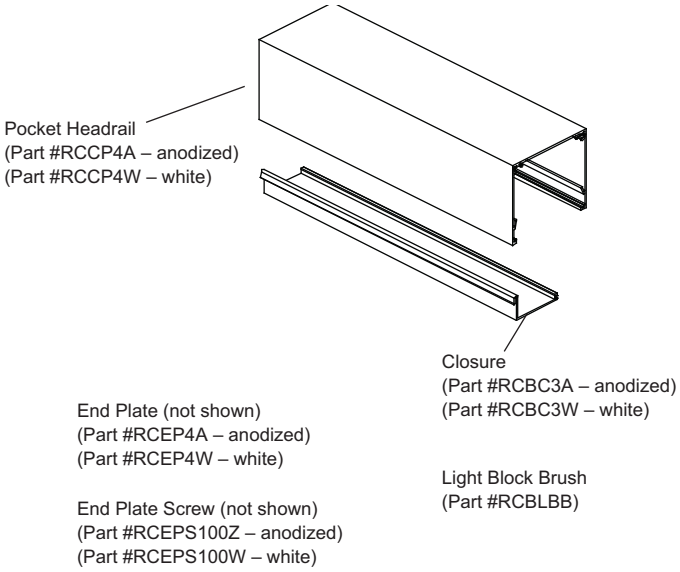

FINISHED DIMENSIONS	
Inside Mount	Ordered Width – 1/8"
Outside Mount	Ordered Width + 1/4"
Exact End to End Mount	Ordered Width

Side and Bottom Channels

Aluminum side and bottom channels prevent light leaks around the edges and bottom of shades. Ideal for room-darkening. Available in white and anodized aluminum finishes. (Side channels feature light-blocking wool pile)

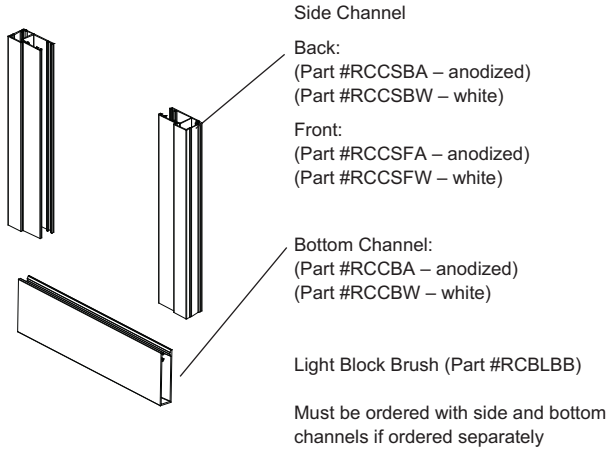

CHANNELS – FLAT SURCHARGES
• Side Channels .....**add $110**
• Bottom Channel.....**add $78**

Note: Side Channels are available with the Pocket Headrail, 4" Fascia, and **R-Series Clutches** only.

Fabric deduction with side channels is 2-3/4" for the headrail cut width.

Pocket Headrail Option Surcharge

WIDTH TO:	24"	30"	36"	48"	60"	72"	84"	96"	108"	120"	132"	144"
	$71	100	117	144	172	201	226	256	284	312	340	368

DECORATIVE PULL TASSELS

Overview
- Optional for TouchLift Cordless shades only.
- Available on fabric-wrapped and Deluxe bottomrails only.
- Available in three styles and multiple color choices.

Style	Color	Color Number
Barrel	Birch	253
	Black	267
	Bone/Ivory	265
	Carob	260
	Snowberry	251
	Walnut	266

NOTE: Pull tassel hanging cord are approximate 6" in length measuring from edge of the bottom bar to the lower edge of the tassel.

Barrel Pull Tassel - specify color .....**add $4**

SPRING ASSIST

Spring Assist <u>Skyline Clutch</u> Control

- Highly recommended for shades between 80" x 80" and 144" x 144"
- Minimum shade size – 44.4 SQ. FT. with shade width greater than 60"
- Geared spring assist clutch system aids in raising heavy shades by reducing the pull force by up to 40%.
- Spring assist is only available with 2 1/2" tube.

SPRING ASSIST UPGRADE SURCHARGE
• Spring Assist Clutch – price shades off Clutch Roller price grid then add surcharge .....**add $105** Note: Spring Assist NOT AVAILABLE with cassettes or 3" Fascia

RAILROADING/MATERIAL SPLICING/SEAM PLACEMENT

Railroaded Material
The fabric is turned on its side, using width for length, to increase the maximum width available. Some fabrics cannot be railroaded due to pattern or construction.

For multiple shade orders, if one shade on the order is railroaded the factory will automatically railroad all other shades. This is done to ensure the pattern direction will be the same on all shades.

Splicing (Seam Placement)
Custom Splicing (Seam Placement) is available with up to 2 seams per shade at a **15% surcharge**. Splice locations are figured from the bottom hem/rail of the shade up. A 1/4" tolerance per seam in either direction is considered acceptable. This is due to the difficulty in handling the material while setting the seam.

The maximum height for custom seams is equal to the material roll width less 3". Example – 98" wide material railroaded and seamed has a maximum seam placement of 95".

Seams may be visible when the shade is fully extended. Seams will be placed as close to the tube as possible, location may varied depending upon roll width and shade height.

Although we maintain the highest quality standards, we cannot guarantee an exact pattern match at the seam on individual shades. We do not guarantee pattern matches shade to shade horizontally or vertically on multiple shade orders.

BOTTOMRAIL OPTIONS

Bottomrail/Hems
Each roller shade fabric comes standard with the fabric-wrapped rail. Alternative bottomrail styles and colors may be selected at no extra charge. Those selections must be noted on your order.

Heat sealed hem bar is highly recommended when shade is ordered with railroaded material or when shade is equal, wider than 108"or longer than 90".

Fabric Wrapped Rail (1")
Front face of rail is wrapped with shade fabric. The back face of the rail is a visible painted finish.
Colors – White, Black

Front face of rail wrapped with shade fabric; back face of rail is a visible painted finish without any fabric wrap. Includes frosted end caps.

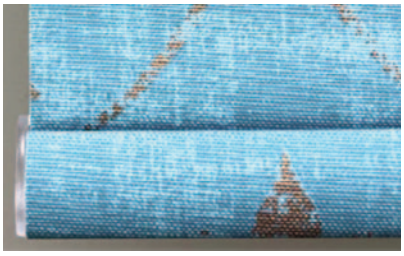

**Fabric wrapped bottomrail comes with clear handle(s) when ordered as TouchLift Shade. Shades greater than 42" will have 2 handles.

Deluxe Rail (1")
Painted metal rail with color-matched end caps.
Colors – White, Vanilla, Silver, Bronze, and Black

Includes color-matched end caps

Heat Sealed Aluminum Bar (1-1/4")
Aluminum bar heat sealed into a hem pocket. Pocket edges are also sealed. Heat Seal Hem bar is highly recommended on bigger dimension and when shade is request to be made with railroaded material or heavier material to improve appearance of the shades; will help reduce waviness, twisting, cupping & curling.

Not available on all styles. Please refer to the **Collection Information** section.

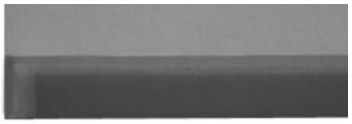

Heat sealed hem to back pocket edges come sealed

Flat Deco Rail (1-1/4") – effective 5/20/2019
Flat aluminum rail for simple clean look. Fabric wrapped not available.

Colors – White, Vanilla, Silver, Bronze, and Black.

Comes with clear end caps only.

EXTERIOR SHADES

Overview
- Designed to provide added sun blockage and privacy outdoors
- Not intended to serve as a wind block; in windy conditions, shade should be completely rolled up
- Available with clutch control only

Exterior Shade Fabric Selections

Exterior rated materials. Need only an occasional cleaning with mild soap and water

Pattern Name	Fabric Code	Warranty
1% E Screen	R80	5 years
1% Sheerweave 2500	R01	5 years
1% Sheerweave 2701	RS21	5 years
1% Sheerweave 4901	P4901	5 years
1% Sheerweave 5000	P5001	5 years
3% E Screen	R81	5 years
3% M Screen	R58	5 years
3% Sheerweave 2410	R06	5 years
3% Sheerweave 2703	P2703	5 years
3% Sheerweave 4400	RS2	5 years
3% Sheerweave 4600	P4600	5 years
3% Sheerweave 4903	P4903	5 years
3% Sheerweave 5000	R07	5 years
3% T Screen	RS16	5 years
4% S Screen	RS15	5 years
5% E Screen	R51	5 years
5% M Screen Deco	R61	5 years
5% Sheerweave 2000	P2000	5 years
5% Sheerweave 2390	RS1	5 years
5% Sheerweave 2705	P2705	5 years
5% Sheerweave 4000	R09	5 years
5% Sheerweave 4500	P4500	5 years
5% Sheerweave 5000	R10	5 years
7% Sheerweave 5000	R34	5 years
10% E Screen	R19	5 years
10% Sheerweave 2360	P2360	5 years
10% Sheerweave 4100	P4100	5 years
10% Sheerweave 5000	R26	5 years

Clutch Lift Continuous Loop Control
- Designed for exterior use
- Constructed of nylon casing and stainless steel interior components for smooth performance and added strength and durability

Stainless Steel Beaded Chain Loop
- Standard length is approximately 2/3 the length of the shade
- Longer lengths available upon request at no additional charge

Bottom Hem – Standard Exterior Shades
- Sealed hem pocket with aluminum bar insert
- Finished with stainless steel grommets to securely anchor the shade (inside diameter – 3/8")

Bottom Bar – Exterior Shades with Cable Guide System
- Round profile aluminum bottom bar
- Cable guide threads through endcaps
- Colors – White, Vanilla, and Bronze

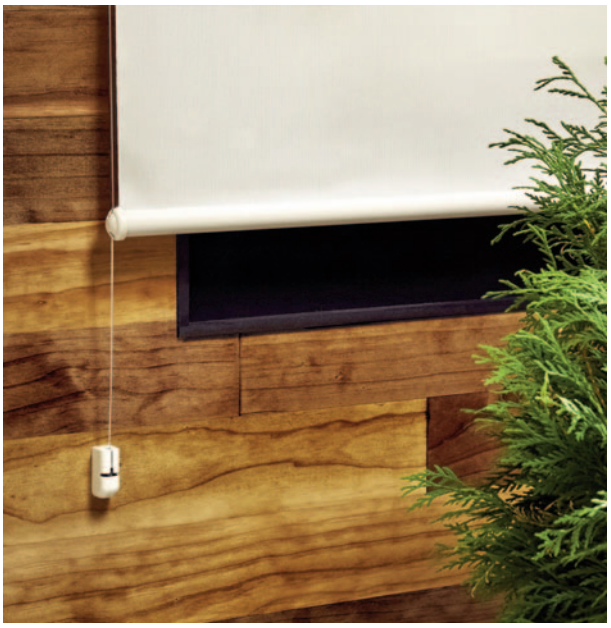

Mounting Brackets
- Dacramet coated rust resistant metal (ASTM rated)

Large Cassette Option – Standard Exterior Shades
- Same large cassette as standard shades
- Available for an added surcharge (refer to grids on price group pages)
- No fabric insert
- Colors – White, Vanilla, Bronze, Silver, and Black

Cassette Option – Exterior Shades with Cable Guide System
- Specially designed large cassette and bracket system
- Available for an added surcharge (refer to **Large Cassette Valance Option Surcharge** on price group pages)
- No fabric insert
- Colors – White, Vanilla, and Bronze

4" Pocket Headrail Option – Standard Exterior Shades
- Available for an added surcharge (refer to **Pocket Headrail, Side and Bottom Channels** section)
- Colors – White, Anodized (not available with cable guide system)

Exterior Shade Surcharge .....**add $34** to the price of the Clutch Roller Shade
Exterior Shade with Cable Guide System Surcharge .....**add $77** to the price of the Clutch Roller Shade
(to add a cassette valance, refer to grid on price group pages)

EXTERIOR SHADES SIZE SPECIFICATIONS

- All Exterior Shades
  Minimum Width: 12", Minimum Height: 12"
- Maximum Sizes – Standard Exterior Shades (EX – Skyline clutch) – refer to the **Product Size Specifications – Clutch Lift section** for detail.
- Maximum Sizes – Exterior Shades with Cable Guide (EXCG – R Series clutch) – refer to **With Cable Guide System (Without Cassette)** chart below.
- Maximum Sizes – Exterior Shades with Cable Guide & Cassette (EXCG – R Series Clutch) – refer to **With Cable Guide System (Cassette)** chart below.

See Product Component diagrams at the back of the guide.

			With Cable Guide System (Without Cassette) - (EXCG)			
			Non-Railroaded		Railroaded	
Material Name	**FABRIC CODE**	**ROLL WIDTH**	**Maximum Width**	**Maximum Height**	**Maximum Width**	**Maximum Height**
1% E Screen	R80	122"	120"	144"	120"	144"
1% Sheerweave 2500	R01	126"	96"	144"	96"	144"
1% Sheerweave 2701	RS21	126"	96"	144"	96"	144"
1% Sheerweave 4901	P4901	98"	96"	144"	N/A	N/A
1% Sheerweave 5000	P5001	98"	96"	120"	N/A	N/A
10% E Screen	R19	122"	120"	144"	120"	N/A
10% Sheerweave 2360	P2360	126"	120"	144"	N/A	N/A
10% Sheerweave 4100	P4100	98"	96"	144"	96"	120"
10% Sheerweave 5000	R26	98"	96"	144"	N/A	N/A
3% E Screen	R81	122"	120"	144"	120"	144"
3% M Screen	R58	122"	120"	144"	120"	144"
3% Sheerweave 2410	R06	126"	96"	144"	96"	144"
3% Sheerweave 2703	P2703	126"	96"	144"	96"	144"
3% Sheerweave 4400	RS2	126"	96"	144"	96"	144"
3% Sheerweave 4600	P4600	126"	96"	120"	96"	120"
3% Sheerweave 4903	P4903	98"	96"	144"	N/A	N/A
3% Sheerweave 5000	R07	98"	96"	110"	N/A	N/A
3% T Screen	RS16	98"	98"	144"	120"	144"
4% S Screen	RS15	122"	96"	144"	N/A	N/A
5% E Screen	R51	122"	120"	144"	120"	144"
5% M Screen Deco	R61	98"	98"	144"	120"	144"
5% Sheerweave 2000	P2000	126"	96"	144"	96"	120"
5% Sheerweave 2390	RS1	126"	120"	144"	120"	144"
5% Sheerweave 2705	P2705	126"	98"	120"	N/A	N/A
5% Sheerweave 4000	R09	126"	96"	144"	96"	144"
5% Sheerweave 4500	P4500	126"	96"	144"	96"	144"
5% Sheerweave 5000	R10	98"	96"	130"	N/A	N/A
7% Sheerweave 5000	R34	98"	96"	135"	N/A	N/A

			With Cable Guide System (with Cassette) - (EXCG)			
			Non-Railroaded		Railroaded	
Material Name	**FABRIC CODE**	**ROLL WIDTH**	**Maximum Width**	**Maximum Height**	**Maximum Width**	**Maximum Height**
1% E Screen	R80	122"	120"	144"	120"	144"
1% Sheerweave 2500	R01	126"	96"	120"	96"	120"
1% Sheerweave 2701	RS21	126"	96"	144"	96"	144"
1% Sheerweave 4901	P4901	98"	96"	96"	N/A	N/A
1% Sheerweave 5000	P5001	98"	96"	78"	N/A	N/A
10% E Screen	R19	122"	120"	144"	120"	144"
10% Sheerweave 2360	P2360	126"	120"	144"	N/A	N/A
10% Sheerweave 4100	P4100	98"	96"	78"	96"	78"
10% Sheerweave 5000	R26	98"	96"	78"	N/A	N/A
3% E Screen	R81	122"	120"	144"	120"	144"
3% M Screen	R58	122"	120"	144"	120"	144"
3% Sheerweave 2410	R06	126"	96"	144"	96"	144"
3% Sheerweave 2703	P2703	126"	96"	96"	96"	96"
3% Sheerweave 4400	RS2	126"	96"	78"	96"	78"
3% Sheerweave 4600	P4600	126"	96"	84"	96"	84"
3% Sheerweave 4903	P4903	98"	96"	90"	N/A	N/A
3% Sheerweave 5000	R07	98"	96"	78"	N/A	N/A
3% T Screen	RS16	98"	98"	120"	120"	120"
4% S Screen	RS15	122"	96"	80"	N/A	N/A
5% E Screen	R51	122"	120"	144"	120"	144"
5% M Screen Deco	R61	98"	98"	120"	120"	120"
5% Sheerweave 2000	P2000	126"	96"	132"	96"	120"
5% Sheerweave 2390	RS1	126"	120"	144"	120"	144"
5% Sheerweave 2705	P2705	126"	98"	102"	N/A	N/A
5% Sheerweave 4000	R09	126"	96"	100"	96"	100"
5% Sheerweave 4500	P4500	126"	96"	108"	96"	108"
5% Sheerweave 5000	R10	98"	96"	78"	N/A	N/A
7% Sheerweave 5000	R34	98"	96"	78"	N/A	N/A

ORDERING NOTES

When ordering, please be sure to specify **DIRECTION OF ROLL**.

- Direction of Roll:
- Extended Projection Bracket (not available with Cassette Valance, Fascia, or Pocket Headrail options)

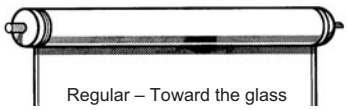

Regular – Toward the glass

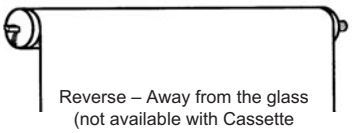

Reverse – Away from the glass (not available with Cassette Valance, Fascias or Pocket Headrail)

2-ON-1 OPTIONS – SPECIFY ON ORDER

- 2-on-1 headrail is only available with the Cassette Valance option for CLUTCH Beaded Chain roller shades or RemoteLift Roll-Up 28 Wirefree RTS (R28WF) motorized shades.
- Price as 2 separate shades and add together. Refer to product specification chart for size limits (based on individual shades)

FEATURES AND OPTIONS

FEATURES AND OPTIONS	
Operating Systems	Clutch, TouchLift Cordless, and Motorization
Clutch - Beaded Chain System	Skyline (standard) R Series (optional)
Plastic Bead Chain	White, Black (standard), Vanilla, Bronze (optional)
Metal Bead Chain** (Optional)	Antique Brass, Oil Rubbed Bronze, Stainless Steel, Nickel, Black and White
TouchLift Cordless	Yes - available in White & Black Bar/Rail
PowerWand™	Yes - available in 1 ft, 2ft, 3ft, 4ft & 5 ft in White or Black
Motorized Roller System	Yes - Radio Frequency (RF) - Simplicity Motorization and RemoteLift (Rollup 28 Wirefree & Sonesse Ultra 30 Wirefree Li-ion)
Hardwired Motorization	Yes - ST30, ST50, and ST50R
Cassette Valance Styles/Sizes	Small = 2-1/2" x 2-1/2", Medium = 3-1/8" x 3-3/4", Large = 3-7/8" x 3-7/8"
Cassette Valance Colors	White, Vanilla, Silver, Bronze & Black (Silver available in medium & large cassette only)
Fascias	Yes - 3" and 4" Profiles, Fascia not available with Simplicity and Powerwand
Fascia Colors	White, Vanilla, Silver, Bronze, Black
Deluxe Valance	Yes - available in most fabrics
Fabric Valance	Yes - available in most fabrics
Pocket Headrail - Colors	Yes - 4" Profile - White and Anodized Aluminum, Pocket not available with Simplicity and Powerwand
Side and Bottom Channels	Yes - White and Anodized Aluminum (side channels feature light-blocking wool pile)
Two-on-One Shade Option	Yes - Clutch or RemoteLift Roll-Up 28 Wirefree RTS (R28WF) with Cassette Valance ONLY *
Exterior Shades	Yes - select patterns
Bottomrail Options	Yes - Fabric Wrapped (standard), Deluxe, Heat-Sealed Aluminum Bar **, and Flat Deco
Bottomrail Colors	Fabric Wrapped - White or Black; Deluxe & Flat Deco - White, Vanilla, Silver, Bronze, or Black
Decorative Shade Pulls	Yes - TouchLift Cordless System Only
Control Positions	R or L - Beaded Chain Clutch System Only
Extension Brackets	No - not available
Hold-Down Brackets	Yes - Fabric-Wrapped and Deluxe Bottomrails Only
Spacer Block	Yes - available with Standard Clutch, TouchLift, Outside Mount (OB) Deluxe Valance, Small/Medium/Large Cassette
Railroad Material Option	Yes - available in most fabrics
Seam/Splicing Fabric	Yes - available in most fabrics
Reverse Roll Option	Yes - not available with Cassette Valance, Fascia, or Pocket Headrail options
Custom Cord Length	Yes - Beaded Chain Clutch System Only
Warranty	Limited Lifetime (5 years for motorization)

* Note: **2 on 1 Headrail Shades** must be ordered as either **Clutch-Beaded Chain** or **RemoteLift** and with the **Cassette Valance** option.

2 on 1 Headrail with R28WF must be ordered with **multi-channel remote control** to allow for independent shade operation.

** Highly recommended for shade size equal, wider or longer than 108" x 90", especially on shades with railroaded material. Heat sealed aluminum bar is **REQUIRED** on several materials, refer to **Collection Information** section for detail.

PRODUCT NOTES

- **Tip to Tip Facts:**
  - On an outside mount Beaded Chain Roller, the material will cover 1" less than the tip to tip width.
  - See Finished Dimension charts for additional information

- **Additional Notes:**
  - Minor telescoping of product is possible if shade is not installed exactly level and is considered acceptable.
  - On orders with multiple shades, if one shade requires railroading, we will railroad all shades for a consistent look.
  - To assure color consistency and avoid dye lot variation, please order all shades at the same time. The availability of colors is subject to change without notice.

- **To Straighten Shade:**
  If your shade does not roll straight, correct as follows:
  Figure A - Shade veers toward right, or left. Correct by lowering shade completely exposing the roller tube and wrapping a 1-1/2" long piece of masking tape, as shown in Figure B, on the shorter side (opposite of where it's veering). This increases the diameter of the roller slightly, acting as a straightener. Then raise and lower the shade.

If shade does not still roll straight, add a second layer of tape and repeat process. Continue to add tape until shade rolls straight.

FIGURE A

FIGURE B

FLAME-RETARDANT FABRICS

The following patterns are flame retardant and suitable for many commercial applictions. They will pass the following F.R. tests:

Material Name	CCC-C-521E	NFPA #101 and/or #701	FTM 191A #5903
1% E Screen		X	
1% Sheerweave 2500		X	
1% Sheerweave 2701		X	
1% Sheerweave 4901		X	
1% Sheerweave 5000		X	
1% Toka		X	
3% E Screen		X	
3% M Screen		X	
3% Sheerweave 2410		X	
3% Sheerweave 2703		X	
3% Sheerweave 4400		X	
3% Sheerweave 4600		X	
3% Sheerweave 4903		X	
3% Sheerweave 5000		X	
3% T Screen		X	
4% S Screen		X	
4% Silver Screen		X	

Material Name	CCC-C-521E	NFPA #101 and/or #701	FTM 191A #5903
5% E Screen		X	
5% M Screen Deco		X	
5% Sheerweave 2000		X	
5% Sheerweave 2390		X	
5% Sheerweave 2705		X	
5% Sheerweave 4000		X	
5% Sheerweave 4500		X	
5% Sheerweave 5000		X	
7% Global Screen		X	
7% Sheerweave 5000		X	
10% E Screen		X	
10% Sheerweave 2360		X	
10% Sheerweave 4100		X	
10% Sheerweave 5000		X	
Blackout - Solid	X	X	X
Flocke Blackout		X	
Sheerweave 7400		X	
Sheerweave 7500		X	
Sheerweave 7600		X	
Sheerweave 7650		X	
Sunscreen (SW) 7000		X	

** **Avila R Blackout** is classified under ASTM E84 (Class B), fire rated for residential applications only.

PRODUCT SIZE SPECIFICATIONS – CLUTCH LIFT

Minimum and Maximum Standards
For shades 12" wide, maximum length is 60"
All Patterns – Minimum Width: 12" Minimum Height: 12".
Spring Assist strongly recommended on shade sizes over 80" x 80".
For TouchLift Cordless specifications, please refer to Product Specifications – Touch Lift section.

Please Note: Shade sizes that are wider than the fabric roll width indicated will be made with the fabric turned width for length (railroaded). The maximum width for non-railroaded shades is the roll width unless otherwise noted.

Fabrics turned width for length will have a visible seam when fabricated longer than their maximum roll width less 10". Fabrics turned width for length may have an edge curl. This is not considered a defect in the product.

Material Name	Roll Width	Railroad Option	Splice/ Seam		Standard Clutch	Fabric Valance	Deluxe Valance	Small Cassette	Medium Cassette	Large Cassette	3" Fascia	4" Fascia	Pocket Headrail	Spring Assist Clutch Standard Shade	Spring Assist Clutch 4" Fascia	Spring Assist Clutch Pocket
1% E Screen	122"	YES	YES	Non-Railroaded												
				Maximum Width	122"**	102"	102"	72"	102"	102"	102"	122"**	122"**	122"**	122"**	122"**
				**R Series clutch - max width - 120"	Maximum Height									Maximum Height		
				For Shade Widths to 84"	144"	144"	144"	74"*	138"	144"	144"	144"	144"	144"	144"	144"
				For Shade Widths to 90"	144"	138"	138"	NA	138"	138"	138"	144"	144"	144"	144"	144"
				For Shade Widths to 96"	144"	108"	108"	NA	108"	108"	108"	144"	144"	144"	144"	144"
				For Shade Widths over 96"	144"	84"	84"	NA	84"	84"	84"	144"	144"	144"	144"	144"
					*Small cassette - max shade size is 72" x 74"											
				Railroaded												
				Maximum Width	144"**	102"	102"	72"	102"	102"	102"	144"**	144"**	144"**	144"**	144"**
				**R Series clutch - max width - 120"	Maximum Height									Maximum Height		
				For Shade Widths to 84"	144"	144"	144"	74"*	138"	144"	144"	144"	144"	144"	144"	144"
				For Shade Widths to 90"	144"	138"	138"	NA	138"	138"	138"	144"	144"	144"	144"	144"
				For Shade Widths to 96"	144"	108"	108"	NA	108"	108"	108"	144"	144"	144"	144"	144"
				For Shade Widths to 102"	144"	84"	84"	NA	84"	84"	84"	144"	144"	144"	144"	144"
				For Shade Widths over 102"	144"	NA	NA	NA	NA	NA	NA	144"	144"	144"	144"	144"
					*Small cassette - max shade size is 72" x 74"											
1% Sheerweave 2500	126"	YES	YES	Non-Railroaded												
				Maximum Width	126"**	102"**	102"**	65"	102"**	102"**	102"**	126"**	126"**	126"**	126"**	126"**
				**R Series clutch - max width - 96"	Maximum Height											
				For Shade Widths to 78"	144"	144"	144"	60"*	114"	144"	144"	144"	144"	NA	NA	NA
				For Shade Widths to 84"	144"	126"	126"	NA	114"	126"	126"	144"	144"	144"	144"	114"
				For Shade Widths to 90"	144"	114"	114"	NA	96"	114"	96"	144"	144"	144"	144"	114"
				For Shade Widths to 96"	144"	114"	114"	NA	78"	114"	90"	144"	144"	144"	144"	114"
				For Shade Widths to 102"	144"	60"	60"	NA	60"	60"	60"	144"	144"	144"	144"	114"
				For Shade Width over 102"	144"	NA	NA	NA	NA	NA	NA	144"	114"	144"	144"	114"
					*Small cassette - max shade size is 65" x 60"											
				Railroaded												
				Maximum Width	144"**	102"**	102"**	65"	102"**	102"**	102"**	144"**	144"**	144"**	144"**	144"**
				**R Series clutch - max width - 96"	Maximum Height									Maximum Height		
				For Shade Widths to 78"	144"	144"	144"	60"*	114"	144"	144"	144"	144"	NA	NA	NA
				For Shade Widths to 84"	144"	126"	126"	NA	114"	126"	126"	144"	144"	144"	144"	114"
				For Shade Widths to 90"	144"	114"	114"	NA	96"	114"	96"	144"	144"	144"	144"	114"
				For Shade Widths to 96"	144"	114"	114"	NA	78"	114"	90"	144"	144"	144"	144"	114"
				For Shade Widths to 102"	144"	60"	60"	NA	60"	60"	60"	144"	144"	144"	144"	114"
				For Shade Widths to 108"	144"	NA	NA	NA	NA	NA	NA	144"	144"	144"	144"	114"
				For Shade Widths over 108"	144"	NA	NA	NA	NA	NA	NA	144"	114"	144"	144"	114"
					*Small cassette - max shade size is 65" x 60"											
1% Sheerweave 2701	126"	YES	YES	Non-Railroaded												
				Maximum Width	126"**	108"**	108"**	84"	108"**	108"**	108"**	126"**	126"**	126"**	126"**	126"**
				**R Series clutch - max width - 96"	Maximum Height									Maximum Height		
				For Shade Widths to 72"	144"	144"	144"	72"	138"	144"	144"	144"	144"	NA	NA	NA
				For Shade Widths to 84"	144"	144"	144"	42"	126"	144"	126"	144"	144"	144"	144"	144"
				For Shade Widths to 90"	144"	144"	144"	NA	96"	144"	114"	144"	144"	144"	144"	144"
				For Shade Widths to 96"	144"	144"	144"	NA	78"	144"	114"	144"	144"	144"	144"	144"
				For Shade Widths to 102"	144"	60"	60"	NA	60"	60"	60"	144"	144"	144"	144"	144"
				For Shade Widths over 102"	144"	48"	48"	NA	48"	48"	48"	144"	144"	144"	144"	144"
				Railroaded												
				Maximum Width	144"**	108"**	108"**	84"	108"**	108"**	108"**	144"**	144"**	144"**	144"**	144"**
				**R Series clutch - max width - 96"	Maximum Height									Maximum Height		
				For Shade Widths to 72"	144"	144"	144"	72"	138"	144"	144"	144"	144"	NA	NA	NA
				For Shade Widths to 84"	144"	144"	144"	42"	126"	144"	126"	144"	144"	144"	144"	144"
				For Shade Widths to 90"	144"	144"	144"	NA	96"	144"	114"	144"	144"	144"	144"	144"
				For Shade Widths to 96"	144"	144"	144"	NA	78"	144"	114"	144"	144"	144"	144"	144"
				For Shade Widths to 102"	144"	60"	60"	NA	60"	60"	60"	144"	144"	144"	144"	144"
				For Shade Widths to 126"	144"	48"	48"	NA	48"	48"	48"	144"	144"	144"	144"	144"
				For Shade Widths over 126"	144"	NA	NA	NA	NA	NA	NA	144"	144"	144"	144"	144"
1% Sheerweave 4901	98"	NO	NO	Non-Railroaded												
				Maximum Width	98"**	88"	88"	84"	98"**	98"**	98"**	98"**	98"**	98"**	98"**	98"**
				**R Series clutch - max width - 96"	Maximum Height									Maximum Height		
				For Shade Widths to 60"	144"	144"	144"	48"	120"	144"	144"	144"	144"	NA	NA	NA
				For Shade Widths to 66"	144"	144"	144"	48"	114"	144"	126"	144"	144"	NA	NA	NA
				For Shade Widths to 78"	144"	144"	144"	48"	96"	144"	126"	144"	144"	NA	NA	NA
				For Shade Widths to 84"	144"	126"	126"	42"	96"	126"	126"	144"	144"	144"	144"	96"
				For Shade Widths to 90"	144"	NA	NA	NA	96"	96"	96"	144"	144"	144"	144"	96"
				For Shade Widths to 96"	144"	NA	NA	NA	78"	96"	78"	144"	144"	144"	144"	96"
				For Shade Widths over 96"	144"	NA	NA	NA	60"	60"	78"	144"	144"	144"	144"	96"
1% Sheerweave 5000	98"	NO	NO	Non-Railroaded												
				Maximum Width	98"**	90"	90"	NA	96"	96"	96"	98"**	98"**	98"**	98"**	98"**
				**R Series clutch - max width - 96"	Maximum Height									Maximum Height		
				For Shade Widths to 60"	144"	102"	102"	NA	66"	102"	102"	120"	120"	NA	NA	NA
				For Shade Widths over 60"	144"	78"	78"	NA	54"	78"	78"	120"	90"	144"	90"	90"

PRODUCT SIZE SPECIFICATIONS – CLUTCH LIFT

Minimum and Maximum Standards
For shades 12" wide, maximum length is 60"
All Patterns – Minimum Width: 12" Minimum Height: 12".
Spring Assist strongly recommended on shade sizes over 80" x 80".
For TouchLift Cordless specifications, please refer to Product Specifications – Touch Lift section.

Please Note: Shade sizes that are wider than the fabric roll width indicated will be made with the fabric turned width for length (railroaded). The maximum width for non-railroaded shades is the roll width unless otherwise noted.

Fabrics turned width for length will have a visible seam when fabricated longer than their maximum roll width less 10". Fabrics turned width for length may have an edge curl. This is not considered a defect in the product.

Material Name	Roll Width	Railroad Option	Splice/ Seam		Standard Clutch	Fabric Valance	Deluxe Valance	Small Cassette	Medium Cassette	Large Cassette	3" Fascia	4" Fascia	Pocket Headrail	Spring Assist Clutch Standard Shade	Spring Assist Clutch 4" Fascia	Spring Assist Clutch Pocket
1% Toka	118"	YES	YES	**Non-Railroaded**												
				Maximum Width	118"**	108"**	108"**	84"	108"**	108"**	108"**	118"**	118"**	118"**	118"**	118"**
				**R Series clutch - max width - 96"	Maximum Height									Maximum Height		
				For Shade Widths to 66"	144"	144"	144"	48"	114"	144"	132"	144"	144"	NA	NA	NA
				For Shade Widths to 72"	144"	144"	144"	48"	96"	144"	132"	144"	144"	NA	NA	NA
				For Shade Widths to 84"	144"	126"	126"	42"	96"	126"	126"	144"	144"	144"	144"	102"
				For Shade Widths to 90"	144"	102"	102"	NA	96"	102"	96"	144"	144"	144"	144"	102"
				For Shade Widths to 96"	144"	102"	102"	NA	78"	102"	82"	144"	144"	144"	144"	102"
				For Shade Widths to 102"	144"	60"	60"	NA	60"	60"	60"	144"	144"	144"	144"	102"
				For Shade Widths over 102"	144"	48"	48"	NA	48"	48"	48"	144"	114"	144"	144"	102"
				Railroaded												
					144"**	108"**	108"**	84"	108"**	108"**	108"**	144"**	144"**	144"**	144"**	144"**
				**R Series clutch - max width -96 "	Maximum Height									Maximum Height		
				For Shade Widths to 66"	144"	144"	144"	48"	114"	144"	132"	144"	144"	NA	NA	NA
				For Shade Widths to 72"	144"	144"	144"	48"	96"	144"	132"	144"	144"	NA	NA	NA
				For Shade Widths to 84"	144"	126"	126"	42"	96"	126"	126"	144"	144"	144"	144"	102"
				For Shade Widths to 90"	144"	102"	102"	NA	96"	102"	96"	144"	144"	144"	144"	102"
				For Shade Widths to 96"	144"	102"	102"	NA	78"	102"	82"	144"	144"	144"	144"	102"
				For Shade Widths to 102"	144"	60"	60"	NA	60"	60"	60"	144"	144"	144"	144"	102"
				For Shade Widths to 108"	144"	48"	48"	NA	48"	48"	48"	144"	144"	144"	144"	102"
				For Shade Widths over 108"	144"	NA	NA	NA	NA	NA	NA	144"	114"	144"	144"	102"
3% E Screen	122"	YES	YES	**Non-Railroaded**												
				Maximum Width	122"**	110"	110"	72"	102"	120"	120"	122"**	122"**	122"**	122"**	122"**
				**R Series clutch - max width - 120"	Maximum Height									Maximum Height		
				For Shade Widths to 84"	144"	144"	144"	84"*	144"	144"	144"	144"	144"	144"	144"	144"
				For Shade Widths to 90"	144"	144"	144"	NA	138"	144"	144"	144"	144"	144"	144"	144"
				For Shade Widths to 96"	144"	144"	144"	NA	108"	144"	144"	144"	144"	144"	144"	144"
				For Shade Widths over 96"	144"	144"	144"	NA	84"	144"	144"	144"	144"	144"	144"	144"
					*Small cassette - max shade size is 72" x 84"											
				Railroaded												
				Maximum Width	144"**	110"	110"	72"	102"	120"	120"	144"**	144"**	144"**	144"**	144"**
				**R Series clutch - max width - 120"	Maximum Height									Maximum Height		
				For Shade Widths to 84"	144"	144"	144"	84"*	144"	144"	144"	144"	144"	144"	144"	144"
				For Shade Widths to 90"	144"	144"	144"	NA	138"	144"	144"	144"	144"	144"	144"	144"
				For Shade Widths to 96"	144"	144"	144"	NA	108"	144"	144"	144"	144"	144"	144"	144"
				For Shade Widths to 102"	144"	144"	144"	NA	84"	144"	144"	144"	144"	144"	144"	144"
				For Shade Widths to 110"	144"	144"	144"	NA	NA	144"	144"	144"	144"	144"	144"	144"
				For Shade Widths to 120"	144"	NA	NA	NA	NA	144"	144"	144"	144"	144"	144"	144"
				For Shade Widths over 120"	144"	NA	NA	NA	NA	NA	NA	144"	144"	144"	144"	144"
					*Small cassette - max shade width is 72"											
3% M Screen	122"	YES	YES	**Non-Railroaded**												
				Maximum Width	122"**	112"	112"	84"	108"	120"	120"	122"**	122"**	122"**	122"**	122"**
				**R Series clutch - max width - 120"	Maximum Height									Maximum Height		
				For Shade Widths to 78"	144"	144"	144"	75"	144"	144"	144"	144"	144"	NA	NA	NA
				For Shade Widths to 84"	144"	144"	144"	60"	144"	144"	144"	144"	144"	144"	144"	144"
				For Shade Widths to 90"	144"	144"	144"	NA	138"	144"	138"	144"	144"	144"	144"	144"
				For Shade Widths over 90"	144"	144"	144"	NA	66"	144"	120"	144"	144"	144"	144"	144"
				Railroaded												
				Maximum Width	144"**	120"	120"	84"	108"	120"	120"	144"**	144"**	144"**	144"**	144"**
				**R Series clutch - max width - 120"	Maximum Height									Maximum Height		
				For Shade Widths to 78"	144"	144"	144"	75"	144"	144"	144"	144"	144"	NA	NA	NA
				For Shade Widths to 84"	144"	144"	144"	60"	144"	144"	144"	144"	144"	144"	144"	144"
				For Shade Widths to 90"	144"	144"	144"	NA	138"	144"	138"	144"	144"	144"	144"	144"
				For Shade Widths to 108"	144"	144"	144"	NA	66"	144"	118"	144"	144"	144"	144"	144"
				For Shade Widths to 120"	144"	144"	144"	NA	NA	144"	118"	144"	144"	144"	144"	144"
				For Shade Widths over 120"	144"	NA	NA	NA	NA	NA	NA	144"	144"	144"	144"	144"
3% Sheerweave 2410	126"	YES	YES	**Non-Railroaded**												
				Maximum Width	126"**	102"**	102"**	78"	96"	102"**	102"**	126"**	126"**	126"**	126"**	126"**
				**R Series clutch - max width - 96"	Maximum Height									Maximum Height		
				For Shade Widths to 78"	144"	144"	144"	60"	144"	144"	144"	144"	144"	NA	NA	NA
				For Shade Widths to 84"	144"	144"	144"	NA	126"	144"	126"	144"	144"	144"	144"	144"
				For Shade Widths to 90"	144"	144"	144"	NA	96"	144"	120"	144"	144"	144"	144"	144"
				For Shade Widths to 96"	144"	144"	144"	NA	78"	144"	120"	144"	144"	144"	144"	144"
				For Shade Widths over 96"	144"	60"	60"	NA	NA	60"	60"	144"	144"	144"	144"	144"
				Railroaded												
				Maximum Width	144"**	102"**	102"**	78"	96"	102"**	102"**	144"**	144"**	144"**	144"**	144"**
				**R Series clutch - max width - 96"	Maximum Height									Maximum Height		
				For Shade Widths to 78"	144"	144"	144"	60"	144"	144"	144"	144"	144"	NA	NA	NA
				For Shade Widths to 84"	144"	144"	144"	NA	126"	144"	126"	144"	144"	144"	144"	144"
				For Shade Widths to 90"	144"	144"	144"	NA	96"	144"	120"	144"	144"	144"	144"	144"
				For Shade Widths to 96"	144"	144"	144"	NA	78"	144"	120"	144"	144"	144"	144"	144"
				For Shade Widths to 102"	144"	60"	60"	NA	NA	60"	60"	144"	144"	144"	144"	144"
				For Shade Widths over 102"	144"	NA	NA	NA	NA	NA	NA	144"	144"	144"	144"	144"

PRODUCT SIZE SPECIFICATIONS – CLUTCH LIFT

Minimum and Maximum Standards
For shades 12" wide, maximum length is 60"
All Patterns – Minimum Width: 12" Minimum Height: 12".
Spring Assist strongly recommended on shade sizes over 80" x 80".
For TouchLift Cordless specifications, please refer to Product Specifications – Touch Lift section.

Please Note: Shade sizes that are wider than the fabric roll width indicated will be made with the fabric turned width for length (railroaded). The maximum width for non-railroaded shades is the roll width unless otherwise noted.

Fabrics turned width for length will have a visible seam when fabricated longer than their maximum roll width less 10".
Fabrics turned width for length may have an edge curl. This is not considered a defect in the product.

Material Name	Roll Width	Railroad Option	Splice/ Seam		Standard Clutch	Fabric Valance	Deluxe Valance	Small Cassette	Medium Cassette	Large Cassette	3" Fascia	4" Fascia	Pocket Headrail	Spring Assist Clutch Standard Shade	Spring Assist Clutch 4" Fascia	Spring Assist Clutch Pocket
3% Sheerweave 2703	126"	YES	YES	**Non-Railroaded**												
				Maximum Width	124"**	108"**	108"**	84"	108"**	108"**	124"**	124"**	124"**	124"**	124"**	124"**
				**R Series clutch - max width - 96"	Maximum Height									Maximum Height		
				For Shade Widths to 66"	144"	144"	144"	48"	114"	144"	126"	144"	144"	NA	NA	NA
				For Shade Widths to 72"	144"	144"	144"	48"	96"	144"	126"	144"	144"	NA	NA	NA
				For Shade Widths to 84"	144"	126"	126"	42"	96"	126"	126"	144"	144"	144"	144"	96"
				For Shade Widths to 90"	144"	96"	96"	NA	96"	96"	96"	144"	144"	144"	144"	96"
				For Shade Widths to 96"	144"	96"	96"	NA	78"	96"	78"	144"	144"	144"	144"	96"
				For Shade Widths to 102"	144"	60"	60"	NA	60"	60"	78"	144"	144"	144"	144"	96"
				For Shade Widths over 102"	144"	48"	48"	NA	48"	48"	78"	144"	96"	144"	144"	96"
				Railroaded												
				Maximum Width	144"**	108"**	108"**	84"	108"**	108"**	124"**	144"**	144"**	144"**	144"**	144"**
				**R Series clutch - max width - 96"	Maximum Height									Maximum Height		
				For Shade Widths to 66"	144"	144"	144"	48"	114"	144"	126"	144"	144"	NA	NA	NA
				For Shade Widths to 72"	144"	144"	144"	48"	96"	144"	126"	144"	144"	NA	NA	NA
				For Shade Widths to 84"	144"	126"	126"	42"	96"	126"	126"	144"	144"	144"	144"	96"
				For Shade Widths to 90"	144"	96"	96"	NA	96"	96"	96"	144"	144"	144"	144"	96"
				For Shade Widths to 96"	144"	96"	96"	NA	78"	96"	78"	144"	144"	144"	144"	96"
				For Shade Widths to 102"	144"	60"	60"	NA	60"	60"	78"	144"	144"	144"	144"	96"
				For Shade Widths over 102"	144"	48"	48"	NA	48"	48"	78"	144"	96"	144"	144"	96"
3% Sheerweave 4400	126"	YES	YES	**Non-Railroaded**												
				Maximum Width	124"**	108"**	108"**	84"	108"**	108"**	108"**	124"**	124"**	124"**	124"**	124"**
				**R Series clutch - max width - 96"	Maximum Height									Maximum Height		
				For Shade Widths to 66"	144"	126"	126"	40"	100"	126"	114"	144"	144"	NA	NA	NA
				For Shade Widths to 72"	144"	126"	126"	40"	84"	126"	108"	144"	144"	NA	NA	NA
				For Shade Widths to 84"	144"	126"	126"	40"	78"	126"	108"	144"	132"	144"	144"	80"
				For Shade Widths to 90"	144"	96"	96"	NA	78"	96"	96"	144"	132"	144"	144"	80"
				For Shade Widths to 96"	144"	78"	78"	NA	78"	78"	78"	144"	132"	144"	144"	80"
				For Shade Widths to 102"	144"	60"	60"	NA	60"	60"	60"	144"	132"	144"	144"	80"
				For Shade Widths over 102"	144"	48"	48"	NA	48"	48"	48"	144"	90"	144"	144"	80"
				Railroaded												
				Maximum Width	144"**	108"**	108"**	84"	108"**	108"**	124"**	144"**	144"**	144"**	144"**	144"**
				**R Series clutch - max width - 96"	Maximum Height									Maximum Height		
				For Shade Widths to 66"	144"	126"	126"	40"	102"	126"	114"	144"	144"	NA	NA	NA
				For Shade Widths to 72"	144"	126"	126"	40"	84"	126"	108"	144"	144"	NA	NA	NA
				For Shade Widths to 84"	144"	126"	126"	40"	78"	126"	108"	144"	132"	144"	144"	78"
				For Shade Widths to 90"	144"	96"	96"	NA	78"	96"	96"	144"	132"	144"	144"	78"
				For Shade Widths to 96"	144"	78"	78"	NA	78"	78"	78"	144"	132"	144"	144"	78"
				For Shade Widths to 102"	144"	60"	60"	NA	60"	60"	60"	144"	132"	144"	144"	78"
				For Shade Widths to 108"	144"	48"	48"	NA	48"	48"	60"	144"	132"	144"	144"	78"
				For Shade Widths over 108"	144"	NA	NA	NA	NA	NA	60"	144"	78"	144"	144"	78"
3% Sheerweave 4600	126"	YES	YES	**Non-Railroaded**												
				Maximum Width	98"**	98"**	98"**	84"	98"**	98"**	98"**	98"**	98"**	98"**	98"**	98"**
				**R Series clutch - max width - 96"	Maximum Height									Maximum Height		
				For Shade Widths to 60"	120"	120"	120"	42"	108"	120"	120"	120"	120"	NA	NA	NA
				For Shade Widths to 66"	120"	120"	120"	42"	108"	120"	114"	120"	120"	NA	NA	NA
				For Shade Widths to 78"	120"	120"	120"	42"	84"	120"	114"	120"	120"	NA	NA	NA
				For Shade Widths to 84"	120"	120"	120"	42"	84"	120"	114"	120"	120"	120"	120"	84"
				For Shade Widths to 90"	120"	96"	96"	NA	84"	96"	96"	120"	120"	120"	120"	84"
				For Shade Widths to 96"	120"	84"	84"	NA	78"	84"	78"	120"	120"	120"	120"	84"
				For Shade Widths over 96"	120"	60"	60"	NA	60"	60"	66"	120"	120"	120"	120"	84"
				Railroaded												
				Maximum Width	120"**	108"**	108"**	84"	108"**	108"**	120"**	120"**	120"**	120"**	120"**	120"**
				**R Series clutch - max width - 96"	Maximum Height									Maximum Height		
				For Shade Widths to 66"	120"	120"	120"	42"	108"	120"	114"	120"	120"	NA	NA	NA
				For Shade Widths to 72"	120"	120"	120"	42"	84"	120"	114"	120"	120"	NA	NA	NA
				For Shade Widths to 84"	120"	120"	120"	42"	84"	120"	114"	120"	120"	120"	120"	84"
				For Shade Widths to 90"	120"	96"	96"	NA	84"	96"	96"	120"	120"	120"	120"	84"
				For Shade Widths to 96"	120"	84"	84"	NA	78"	84"	78"	120"	120"	120"	120"	84"
				For Shade Widths to 102"	120"	60"	60"	NA	60"	60"	66"	120"	120"	120"	120"	84"
				For Shade Widths over 102"	120"	48"	48"	NA	48"	48"	66"	120"	114"	120"	120"	84"
3% Sheerweave 4903	98"	NO	NO	**Non-Railroaded**												
				Maximum Width	98"**	88"	88"	84"	98"**	98"**	98"**	98"**	98"**	98"**	98"**	98"**
				**R Series clutch - max width - 96"	Maximum Height									Maximum Height		
				For Shade Widths to 60"	144"	144"	144"	48"	120"	144"	144"	144"	144"	NA	NA	NA
				For Shade Widths to 66"	144"	144"	144"	48"	114"	144"	126"	144"	144"	NA	NA	NA
				For Shade Widths to 78"	144"	144"	144"	48"	90"	144"	126"	144"	144"	NA	NA	NA
				For Shade Widths to 84"	144"	126"	126"	42"	90"	126"	126"	144"	144"	144"	144"	96"
				For Shade Widths to 88"	144"	96"	96"	NA	90"	96"	96"	144"	144"	144"	144"	96"
				For Shade Widths to 90"	144"	NA	NA	NA	90"	96"	96"	144"	144"	144"	144"	96"
				For Shade Widths to 96"	144"	NA	NA	NA	78"	90"	78"	144"	144"	144"	144"	96"
				For Shade Widths over 96"	144"	NA	NA	NA	60"	60"	78"	144"	144"	144"	144"	96"

PRODUCT SIZE SPECIFICATIONS – CLUTCH LIFT

Minimum and Maximum Standards
For shades 12" wide, maximum length is 60"
All Patterns – Minimum Width: 12" Minimum Height: 12".
Spring Assist strongly recommended on shade sizes over 80" x 80".
For TouchLift Cordless specifications, please refer to Product Specifications – Touch Lift section.

Please Note: Shade sizes that are wider than the fabric roll width indicated will be made with the fabric turned width for length (railroaded). The maximum width for non-railroaded shades is the roll width unless otherwise noted.

Fabrics turned width for length will have a visible seam when fabricated longer than their maximum roll width less 10". Fabrics turned width for length may have an edge curl. This is not considered a defect in the product.

Material Name	Roll Width	Railroad Option	Splice/ Seam		Standard Clutch	Fabric Valance	Deluxe Valance	Small Cassette	Medium Cassette	Large Cassette	3" Fascia	4" Fascia	Pocket Headrail	Spring Assist Clutch Standard Shade	Spring Assist Clutch 4" Fascia	Spring Assist Clutch Pocket
3% Sheerweave 5000	98"	NO	NO	Non-Railroaded												
(R07_02, 04, 05, 07, 10)				**Maximum Width**	**98"****	**90"**	**90"**	**NA**	**84"**	**96"**	**96"**	**98"****	**98"****	**98"****	**98"****	**98"****
				**R Series clutch - max width -96"	Maximum Height									Maximum Height		
				For Shade Widths to 60"	144"	90"	90"	NA	60"	90"	90"	120"	102"	NA	NA	NA
				For Shade Widths over 60"	144"	72"	72"	NA	42"	72"	60"	120"	78"	144"	90"	NA
3% Sheerweave 5000	98"	NO	NO	Non-Railroaded												
(R07_R11, R89, R90, R93, U10, U11)				**Maximum Width**	**98"****	**88"**	**88"**	**NA**	**96"**	**96"**	**96"**	**98"****	**98"****	**98"****	**98"****	**98"****
				**R Series clutch - max width -96"	Maximum Height									Maximum Height		
				For Shade Widths to 60"	144"	96"	96"	NA	66"	96"	84"	144"	134"	NA	NA	NA
				For Shade Widths over 60"	144"	78"	78"	NA	48"	78"	72"	138"	84"	144"	102"	NA
3% T Screen	98"	YES	YES	Non-Railroaded												
				Maximum Width	**98"**	**90"**	**90"**	**84"**	**96"**	**96"**	**96"**	**98"**	**98"**	**98"**	**98"**	**98"**
					Maximum Height									Maximum Height		
				For Shade Widths to 84"	144"	144"	144"	54"	114"	144"	144"	144"	144"	144"	144"	114"
				For Shade Widths to 90"	144"	138"	138"	NA	114"	138"	138"	144"	144"	144"	144"	114"
				For Shade Widths over 90"	144"	NA	NA	NA	108"	108"	108"	144"	144"	144"	144"	114"
				Railroaded												
				Maximum Width	**120"**	**108"**	**108"**	**84"**	**108"**	**108"**	**108"**	**120"**	**120"**	**120"**	**120"**	**120"**
					Maximum Height									Maximum Height		
				For Shade Widths to 84"	144"	144"	144"	54"	114"	144"	144"	144"	144"	144"	144"	114"
				For Shade Widths to 90"	144"	138"	138"	NA	114"	138"	138"	144"	144"	144"	144"	114"
				For Shade Widths to 98"	144"	108"	108"	NA	108"	108"	108"	144"	144"	144"	144"	114"
				For Shade Widths over 98"	120"	66"	66"	NA	66"	66"	66"	120"	120"	120"	120"	114"
4% S Screen	122"	NO	NO	Non-Railroaded												
				Maximum Width	**122"****	**108"****	**108"****	**84"**	**108"****	**108"****	**108"****	**122"****	**122"****	**122"****	**122"****	**122"****
				**R Series clutch - max width - 96"	Maximum Height									Maximum Height		
				For Shade Widths to 66"	144"	120"	120"	40"	96"	120"	114"	144"	144"	NA	NA	NA
				For Shade Widths to 72"	144"	120"	120"	40"	84"	120"	102"	144"	144"	NA	NA	NA
				For Shade Widths to 84"	144"	120"	120"	40"	72"	120"	102"	144"	126"	144"	144"	80"
				For Shade Widths to 90"	144"	96"	96"	NA	72"	96"	96"	144"	126"	144"	144"	80"
				For Shade Widths to 96"	144"	78"	78"	NA	72"	78"	78"	144"	126"	144"	144"	80"
				For Shade Widths to 102"	144"	60"	60"	NA	60"	60"	60"	144"	126"	144"	144"	80"
				For Shade Widths over 102"	144"	48"	48"	NA	48"	48"	48"	144"	90"	144"	144"	80"
4% Silver Screen	94"	YES	YES	Non-Railroaded												
				Maximum Width	**94"**	**84"**	**84"**	**90"**	**94"**	**94"**	**94"**	**94"**	**94"**	**94"**	**94"**	**94"**
					Maximum Height									Maximum Height		
				For Shade Widths to 78"	144"	144"	144"	78"	144"	144"	144"	144"	144"	NA	NA	NA
				For Shade Widths to 84"	144"	144"	144"	60"	144"	144"	144"	144"	144"	144"	144"	144"
				For Shade Widths to 90"	144"	NA	NA	42"	138"	144"	138"	144"	144"	144"	144"	144"
				For Shade Widths over 90"	144"	NA	NA	NA	108"	144"	132"	144"	144"	144"	144"	144"
				Railroaded												
				Maximum Width	**144"****	**120"**	**120"**	**90"**	**120"**	**120"**	**120"**	**144"****	**144"****	**144"****	**144"****	**144"****
				**R Series clutch - max width - 120"	Maximum Height									Maximum Height		
				For Shade Widths to 78"	144"	144"	144"	78"	144"	144"	144"	144"	144"	NA	NA	NA
				For Shade Widths to 84"	144"	144"	144"	60"	144"	144"	144"	144"	144"	144"	144"	144"
				For Shade Widths to 90"	144"	144"	144"	42"	138"	144"	138"	144"	144"	144"	144"	144"
				For Shade Widths to 94"	144"	144"	144"	NA	108"	144"	132"	144"	144"	144"	144"	144"
				For Shade Widths over 94"	144"	144"	144"	NA	72"	144"	132"	144"	144"	144"	144"	144"
5% E Screen	122"	YES	YES	Non-Railroaded												
				Maximum Width	**122"****	**112"**	**112"**	**90"**	**120"**	**120"**	**120"**	**122"****	**122"****	**122"****	**122"****	**122"****
				**R Series clutch - max width - 120"	Maximum Height									Maximum Height		
				For Shade Widths to 72"	144"	144"	144"	90"	144"	144"	144"	144"	144"	NA	NA	NA
				For Shade Widths to 78"	144"	144"	144"	84"	144"	144"	144"	144"	144"	NA	NA	NA
				For Shade Widths to 84"	144"	144"	144"	60"	144"	144"	144"	144"	144"	144"	144"	144"
				For Shade Widths to 90"	144"	144"	144"	42"	138"	144"	144"	144"	144"	144"	144"	144"
				For Shade Widths over 90"	144"	144"	144"	NA	84"	144"	144"	144"	144"	144"	144"	144"
				Railroaded												
				Maximum Width	**144"****	**120"**	**120"**	**90"**	**120"**	**120"**	**120"**	**144"****	**144"****	**144"****	**144"****	**144"****
				**R Series clutch - max width - 120"	Maximum Height									Maximum Height		
				For Shade Widths to 72"	144"	144"	144"	90"	144"	144"	144"	144"	144"	NA	NA	NA
				For Shade Widths to 78"	144"	144"	144"	84"	144"	144"	144"	144"	144"	NA	NA	NA
				For Shade Widths to 84"	144"	144"	144"	60"	144"	144"	144"	144"	144"	144"	144"	144"
				For Shade Widths to 90"	144"	144"	144"	42"	138"	144"	144"	144"	144"	144"	144"	144"
				For Shade Widths to 120"	144"	144"	144"	NA	84"	144"	144"	144"	144"	144"	144"	144"
				For Shade Widths over 120"	144"	NA	NA	NA	NA	NA	NA	144"	144"	144"	144"	144"

PRODUCT SIZE SPECIFICATIONS – CLUTCH LIFT

Minimum and Maximum Standards
For shades 12" wide, maximum length is 60"
All Patterns – Minimum Width: 12" Minimum Height: 12".
Spring Assist strongly recommended on shade sizes over 80" x 80".
For TouchLift Cordless specifications, please refer to Product Specifications – Touch Lift section.

Please Note: Shade sizes that are wider than the fabric roll width indicated will be made with the fabric turned width for length (railroaded). The maximum width for non-railroaded shades is the roll width unless otherwise noted.

Fabrics turned width for length will have a visible seam when fabricated longer than their maximum roll width less 10".
Fabrics turned width for length may have an edge curl. This is not considered a defect in the product.

Material Name	Roll Width	Railroad Option	Splice/ Seam		Standard Clutch	Fabric Valance	Deluxe Valance	Small Cassette	Medium Cassette	Large Cassette	3" Fascia	4" Fascia	Pocket Headrail	Spring Assist Clutch Standard Shade	Spring Assist Clutch 4" Fascia	Spring Assist Clutch Pocket
5% M Screen Deco	98"	YES	YES	Non-Railroaded												
				Maximum Width	98"	90"	90"	90"	98"	98"	98"	98"	98"	98"	98"	98"
					Maximum Height									Maximum Height		
				For Shade Widths to 78"	144"	144"	144"	60"	120"	144"	144"	144"	144"	NA	NA	NA
				For Shade Widths to 84"	144"	144"	144"	60"	120"	144"	144"	144"	144"	144"	144"	130"
				For Shade Widths to 90"	144"	138"	138"	48"	120"	138"	138"	144"	144"	144"	144"	130"
				For Shade Widths over 90"	144"	NA	NA	NA	84"	126"	102"	144"	144"	144"	144"	130"
				Railroaded												
				Maximum Width	144"**	120"	120"	90"	120"	120"	120"	144"**	144"**	144"**	144"**	144"**
				**R Series clutch - max width - 120"	Maximum Height									Maximum Height		
				For Shade Widths to 78"	144"	144"	144"	60"	120"	144"	144"	144"	144"	NA	NA	NA
				For Shade Widths to 84"	144"	144"	144"	60"	120"	144"	144"	144"	144"	144"	144"	130"
				For Shade Widths to 90"	144"	138"	138"	48"	120"	138"	138"	144"	144"	144"	144"	130"
				For Shade Widths to 98"	144"	126"	126"	NA	84"	126"	102"	144"	144"	144"	144"	130"
				For Shade Widths over 98"	144"	126"	126"	NA	60"	126"	102"	144"	126"	144"	144"	130"
5% Sheerweave 2000	126"	YES	YES	Non-Railroaded												
				Maximum Width	126"**	108"**	108"**	84"	108"**	108"**	108"**	126"**	126"**	126"**	126"**	126"**
				**R Series clutch - max width - 96"	Maximum Height									Maximum Height		
				For Shade Widths to 66"	144"	144"	144"	66"	132"	144"	144"	144"	144"	NA	NA	NA
				For Shade Widths to 72"	144"	144"	144"	66"	132"	144"	144"	144"	144"	NA	NA	NA
				For Shade Widths to 84"	144"	132"	132"	42"	126"	132"	126"	144"	144"	144"	144"	138"
				For Shade Widths to 90"	144"	132"	132"	NA	96"	132"	108"	144"	144"	144"	144"	138"
				For Shade Widths to 96"	144"	132"	132"	NA	78"	132"	108"	144"	144"	144"	144"	138"
				For Shade Widths to 102"	144"	60"	60"	NA	60"	60"	108"	144"	144"	144"	144"	138"
				For Shade Widths over 102"	144"	48"	48"	NA	48"	48"	108"	144"	138"	144"	144"	138"
				Railroaded												
				Maximum Width	120"**	108"**	108"**	84"	108"**	108"**	108"**	120"**	120"**	120"**	120"**	120"**
				**R Series clutch - max width - 96"	Maximum Height									Maximum Height		
				For Shade Widths to 66"	120"	120"	120"	66"	120"	120"	120"	120"	120"	NA	NA	NA
				For Shade Widths to 72"	120"	120"	120"	66"	120"	120"	120"	120"	120"	NA	NA	NA
				For Shade Widths to 84"	120"	120"	120"	42"	120"	120"	120"	120"	120"	120"	120"	120"
				For Shade Widths to 90"	120"	120"	120"	NA	96"	120"	102"	120"	120"	120"	120"	120"
				For Shade Widths to 96"	120"	120"	120"	NA	78"	120"	102"	120"	120"	120"	120"	120"
				For Shade Widths to 102"	120"	60"	60"	NA	60"	60"	102"	120"	120"	120"	120"	120"
				For Shade Widths over 102"	120"	48"	48"	NA	48"	48"	102"	120"	120"	120"	120"	120"
5% Sheerweave 2390	126"	YES	YES	Non-Railroaded												
				Maximum Width	126"**	116"	116"	102"	102"	120"	120"	126"**	126"**	126"**	126"**	126"**
				**R Series clutch - max width - 120"	Maximum Height									Maximum Height		
				For Shade Widths to 72"	144"	144"	144"	90"	144"	144"	144"	144"	144"	NA	NA	NA
				For Shade Widths to 78"	144"	144"	144"	84"	144"	144"	144"	144"	144"	NA	NA	NA
				For Shade Widths to 84"	144"	144"	144"	60"	144"	144"	144"	144"	144"	144"	144"	144"
				For Shade Widths to 90"	144"	144"	144"	42"	132"	144"	144"	144"	144"	144"	144"	144"
				For Shade Widths over 90"	144"	144"	144"	42"	84"	144"	144"	144"	144"	144"	144"	144"
				Railroaded												
				Maximum Width	144"**	120"	120"	102"	102"	120"	120"	144"**	144"**	144"**	144"**	144"**
				**R Series clutch - max width - 120"	Maximum Height									Maximum Height		
				For Shade Widths to 72"	144"	144"	144"	90"	144"	144"	144"	144"	144"	NA	NA	NA
				For Shade Widths to 78"	144"	144"	144"	84"	144"	144"	144"	144"	144"	NA	NA	NA
				For Shade Widths to 84"	144"	144"	144"	60"	144"	144"	144"	144"	144"	144"	144"	144"
				For Shade Widths to 90"	144"	144"	144"	42"	132"	144"	144"	144"	144"	144"	144"	144"
				For Shade Widths to 126"	144"	144"	144"	42"	84"	144"	144"	144"	144"	144"	144"	144"
				For Shade Widths over 126"	144"	NA	NA	NA	NA	NA	NA	144"	144"	144"	144"	144"
5% Sheerweave 2705	126"	NO	NO	Non-Railroaded												
				Maximum Width	98"	NA	98"	90"	98"	98"	98"	98"	98"	98"	98"	98"
				**R Series clutch - max width - 98"	Maximum Height									Maximum Height		
				For Shade Widths to 66"	120"	NA	120"	48"	120"	120"	120"	120"	120"	N/A	NA	NA
				For Shade Widths to 72"	120"	NA	120"	48"	114"	120"	120"	120"	120"	NA	NA	NA
				For Shade Widths to 78"	120"	NA	120"	48"	102"	120"	120"	120"	120"	NA	NA	NA
				For Shade Widths to 84"	120"	NA	120"	48"	102"	120"	120"	120"	120"	120"	120"	102"
				For Shade Widths to 90"	120"	NA	120"	42"	102"	120"	120"	120"	120"	120"	120"	102"
				For Shade Widths over 90"	120"	NA	102"	NA	84"	102"	84"	120"	120"	120"	120"	102"

PRODUCT SIZE SPECIFICATIONS – CLUTCH LIFT

Minimum and Maximum Standards
For shades 12" wide, maximum length is 60"
All Patterns – Minimum Width: 12" Minimum Height: 12".
Spring Assist strongly recommended on shade sizes over 80" x 80".
For TouchLift Cordless specifications, please refer to Product Specifications – Touch Lift section.

Please Note: Shade sizes that are wider than the fabric roll width indicated will be made with the fabric turned width for length (railroaded). The maximum width for non-railroaded shades is the roll width unless otherwise noted.

Fabrics turned width for length will have a visible seam when fabricated longer than their maximum roll width less 10".
Fabrics turned width for length may have an edge curl. This is not considered a defect in the product.

Material Name	Roll Width	Railroad Option	Splice/ Seam		Standard Clutch	Fabric Valance	Deluxe Valance	Small Cassette	Medium Cassette	Large Cassette	3" Fascia	4" Fascia	Pocket Headrail	Spring Assist Clutch Standard Shade	Spring Assist Clutch 4" Fascia	Spring Assist Clutch Pocket
5% Sheerweave 4000	**126"**	**YES**	**YES**	**Non-Railroaded**												
				Maximum Width	**126"****	**102"****	**102"****	**84"**	**102"****	**102"****	**102"****	**126"****	**126"****	**126"****	**126"****	**126"****
				**R Series clutch - max width - 96"	**Maximum Height**									**Maximum Height**		
				For Shade Widths to 66"	144"	138"	138"	42"	114"	138"	120"	144"	144"	NA	NA	NA
				For Shade Widths to 72"	144"	138"	138"	42"	90"	138"	120"	144"	144"	NA	NA	NA
				For Shade Widths to 84"	144"	126"	126"	42"	90"	126"	120"	144"	144"	144"	144"	90"
				For Shade Widths to 90"	144"	96"	96"	NA	90"	96"	96"	144"	144"	144"	144"	90"
				For Shade Widths to 96"	144"	90"	90"	NA	78"	90"	78"	144"	144"	144"	144"	90"
				For Shade Widths to 102"	144"	60"	60"	NA	60"	60"	60"	144"	144"	144"	144"	90"
				For Shade Widths over 102"	144"	NA	NA	NA	NA	NA	NA	144"	90"	144"	144"	90"
				Railroaded												
				Maximum Width	**144"****	**102"****	**102"****	**84"**	**102"****	**102"****	**102"****	**144"****	**144"****	**144"****	**144"****	**144"****
				**R Series clutch - max width - 96"	**Maximum Height**									**Maximum Height**		
				For Shade Widths to 66"	144"	138"	138"	42"	114"	138"	120"	144"	144"	NA	NA	NA
				For Shade Widths to 72"	144"	138"	138"	42"	90"	138"	120"	144"	144"	NA	NA	NA
				For Shade Widths to 84"	144"	126"	126"	42"	90"	126"	120"	144"	144"	144"	144"	90"
				For Shade Widths to 90"	144"	96"	96"	NA	90"	96"	96"	144"	144"	144"	144"	90"
				For Shade Widths to 96"	144"	90"	90"	NA	78"	90"	78"	144"	144"	144"	144"	90"
				For Shade Widths to 102"	144"	60"	60"	NA	60"	60"	60"	144"	144"	144"	144"	90"
				For Shade Widths over 102"	144"	NA	NA	NA	NA	NA	NA	144"	90"	144"	144"	90"
5% Sheerweave 4500	**126"**	YES	YES	**Non-Railroaded**												
				Maximum Width	**126"****	**108"****	**108"****	**84"**	**108"****	**108"****	**126"****	**126"****	**126"****	**126"****	**126"****	**126"****
				**R Series clutch - max width - 96"	**Maximum Height**									**Maximum Height**		
				For Shade Widths to 66"	144"	144"	144"	54"	114"	144"	144"	144"	144"	NA	NA	NA
				For Shade Widths to 72"	144"	144"	144"	54"	108"	144"	144"	144"	144"	NA	NA	NA
				For Shade Widths to 84"	144"	126"	126"	42"	108"	126"	126"	144"	144"	144"	144"	108"
				For Shade Widths to 90"	144"	108"	108"	NA	96"	108"	96"	144"	144"	144"	144"	108"
				For Shade Widths to 96"	144"	108"	108"	NA	78"	108"	90"	144"	144"	144"	144"	108"
				For Shade Widths to 102"	144"	60"	60"	NA	60"	60"	90"	144"	144"	144"	144"	108"
				For Shade Widths over 102"	144"	48"	48"	NA	48"	48"	90"	144"	108"	144"	144"	108"
				Railroaded												
				Maximum Width	**120"****	**108"****	**108"****	**84"**	**108"****	**108"****	**120"****	**120"****	**120"****	**120"****	**120"****	**120"****
				**R Series clutch - max width - 96"	**Maximum Height**									**Maximum Height**		
				For Shade Widths to 66"	144"	144"	144"	54"	114"	144"	144"	144"	144"	NA	NA	NA
				For Shade Widths to 72"	144"	144"	144"	54"	108"	144"	144"	144"	144"	NA	NA	NA
				For Shade Widths to 84"	144"	126"	126"	42"	108"	126"	126"	144"	144"	144"	144"	108"
				For Shade Widths to 90"	144"	108"	108"	NA	96"	108"	96"	144"	144"	144"	144"	108"
				For Shade Widths to 96"	144"	108"	108"	NA	78"	108"	90"	144"	144"	144"	144"	108"
				For Shade Widths to 102"	144"	60"	60"	NA	60"	60"	90"	144"	144"	144"	144"	108"
				For Shade Widths over 102"	144"	48"	48"	NA	48"	48"	90"	144"	108"	144"	144"	108"
5% Sheerweave 5000	**98"**	**NO**	**NO**	**Non-Railroaded**												
(R10_01, 03, 06, 07, 09, 10, 11, 12, 13,14, 15, 16, 17, 18, 19, 20, 21)				**Maximum Width**	**98"****	**88"**	**88"**	**NA**	**96"**	**96"**	**96"**	**98"****	**98"****	**98"****	**98"****	**98"****
				**R Series clutch - max width - 96"	**Maximum Height**									**Maximum Height**		
				For Shade Widths to 60"	144"	102"	102"	NA	72"	102"	96"	144"	144"	NA	NA	NA
				For Shade Widths to 66"	144"	102"	102"	NA	72"	102"	96"	144"	126"	NA	NA	NA
				For Shade Widths to 72"	144"	90"	90"	NA	72"	90"	84"	144"	126"	NA	NA	NA
				For Shade Widths to 78"	144"	90"	90"	NA	60"	90"	78"	144"	126"	NA	NA	NA
				For Shade Widths to 84"	144"	90"	90"	NA	54"	90"	78"	144"	126"	144"	114"	NA
				For Shade Widths to 88"	144"	90"	90"	NA	54"	90"	78"	144"	96"	144"	114"	NA
				For Shade Widths to 90"	144"	N/A	N/A	NA	54"	90"	78"	144"	96"	144"	114"	NA
				For Shade Widths to 96"	144"	N/A	N/A	NA	54"	78"	78"	144"	96"	144"	114"	NA
				For Shade Widths over 96"	144"	N/A	N/A	NA	NA	N/A	NA	144"	96"	144"	114"	NA
5% Sheerweave 5000	**98"**	**NO**	**NO**	**Non-Railroaded**												
(R10_Q51, S77, S84)				**Maximum Width**	**98"****	**88"**	**88"**	**NA**	**98"****	**98"****	**98"****	**98"****	**98"****	**98"****	**98"****	**98"****
				**R Series clutch - max width - 96"	**Maximum Height**									**Maximum Height**		
				For Shade Widths to 60"	144"	108"	108"	NA	72"	108"	96"	144"	144"	NA	NA	NA
				For Shade Widths to 66"	144"	108"	108"	NA	72"	108"	96"	144"	126"	NA	NA	NA
				For Shade Widths to 72"	144"	90"	90"	NA	72"	90"	84"	144"	126"	NA	NA	NA
				For Shade Widths to 78"	144"	90"	90"	NA	60"	90"	78"	144"	126"	NA	NA	NA
				For Shade Widths to 84"	144"	90"	90"	NA	54"	90"	78"	144"	126"	144"	114"	NA
				For Shade Widths to 88"	144"	90"	90"	NA	54"	90"	78"	144"	96"	144"	114"	NA
				For Shade Widths to 90"	144"	N/A	N/A	NA	54"	90"	78"	144"	96"	144"	114"	NA
				For Shade Widths to 96"	144"	N/A	N/A	NA	54"	78"	78"	144"	96"	144"	114"	NA
				For Shade Widths over 96"	144"	N/A	N/A	NA	54"	60"	60"	144"	96"	144"	114"	NA
5% Sheerweave 5000	**98"**	**NO**	**NO**	**Non-Railroaded**												
(R10_Q43, S82)				**Maximum Width**	**98"****	**88"**	**88"**	**NA**	**98"****	**98"****	**98"****	**98"****	**98"****	**98"****	**98"****	**98"****
				**R Series clutch - max width - 96"	**Maximum Height**									**Maximum Height**		
				For Shade Widths to 60"	144"	126"	126"	NA	84"	126"	108"	144"	144"	NA	NA	NA
				For Shade Widths to 66"	144"	114"	114"	NA	84"	114"	108"	144"	144"	NA	NA	NA
				For Shade Widths to 72"	144"	102"	102"	NA	84"	102"	90"	144"	144"	NA	NA	NA
				For Shade Widths to 78"	144"	102"	102"	NA	66"	102"	90"	144"	144"	NA	NA	NA
				For Shade Widths to 84"	144"	102"	102"	NA	66"	102"	90"	144"	126"	144"	138"	NA
				For Shade Widths to 88"	144"	96"	96"	NA	66"	96"	90"	144"	114"	144"	138"	NA
				For Shade Widths to 90"	144"	N/A	N/A	NA	66"	96"	90"	144"	114"	144"	138"	NA
				For Shade Widths to 96"	144"	N/A	N/A	NA	66"	78"	78"	144"	114"	144"	138"	66"
				For Shade Widths over 96"	144"	N/A	N/A	NA	60"	60"	60"	144"	114"	144"	138"	66"

PRODUCT SIZE SPECIFICATIONS – CLUTCH LIFT

Minimum and Maximum Standards
For shades 12" wide, maximum length is 60"
All Patterns – Minimum Width: 12" Minimum Height: 12".
Spring Assist strongly recommended on shade sizes over 80" x 80".
For TouchLift Cordless specifications, please refer to Product Specifications – Touch Lift section.

Please Note: Shade sizes that are wider than the fabric roll width indicated will be made with the fabric turned width for length (railroaded). The maximum width for non-railroaded shades is the roll width unless otherwise noted.

Fabrics turned width for length will have a visible seam when fabricated longer than their maximum roll width less 10".
Fabrics turned width for length may have an edge curl. This is not considered a defect in the product.

Material Name	Roll Width	Railroad Option	Splice/ Seam		Standard Clutch	Fabric Valance	Deluxe Valance	Small Cassette	Medium Cassette	Large Cassette	3" Fascia	4" Fascia	Pocket Headrail	Spring Assist Clutch Standard Shade	Spring Assist Clutch 4" Fascia	Spring Assist Clutch Pocket
7% Global Screen	118"	YES	YES	Non-Railroaded												
				Maximum Width	118"	108"	108"	90"	118"	118"	118"	118"	118"	118"	118"	118"
					Maximum Height									Maximum Height		
				For Shade Widths to 78"	144"	144"	144"	66"	126"	144	144	144"	144"	NA	NA	NA
				For Shade Widths to 84"	144"	144"	144"	60"	126"	144	144	144"	144"	144"	144"	132"
				For Shade Widths to 90"	144"	138"	138"	42"	126"	138"	138"	144"	144"	144"	144"	132"
				For Shade Widths over 90"	144"	132"	132"	NA	60"	132"	108"	144"	144"	144"	144"	132"
				Railroaded												
				Maximum Width	144"**	120"	120"	90"	120"	120"	120"	144"**	144"**	144"**	144"**	144"**
				**R Series clutch - max width - 120"	Maximum Height									Maximum Height		
				For Shade Widths to 78"	144"	144"	144"	66"	126"	144	144	144"	144"	NA	NA	NA
				For Shade Widths to 84"	144"	144"	144"	60"	126"	144	144	144"	144"	144"	144"	132"
				For Shade Widths to 90"	144"	138"	138"	42"	126"	138"	138"	144"	144"	144"	144"	132"
				For Shade Widths to 118"	144"	132"	132"	NA	60"	132"	108"	144"	144"	144"	144"	132"
				For Shade Widths over 118"	144"	132"	132"	NA	60"	132"	108"	144"	132"	144"	144"	132"
7% Sheerweave 5000 *(R34_Q46)*	98"	NO	NO	Non-Railroaded												
				Maximum Width	98"**	90"	90"	NA	96"	96"	96"	98"**	98"**	98"**	98"**	98"**
				**R Series clutch - max width - 96"	Maximum Height									Maximum Height		
				For Shade Widths to 60"	144"	102"	102"	NA	66"	102"	102"	120"	120"	NA	NA	NA
				For Shade Widths over 60"	144"	78"	78"	NA	54"	78"	78"	120"	90"	144"	120"	90"
7% Sheerweave 5000 *(R34_08, 09)*	98"	NO	NO	Non-Railroaded												
				Maximum Width	98"**	88"	88"	84"	98"**	98"**	98"**	98"**	98"**	98"**	98"**	98"**
				**R Series clutch - max width - 96"	Maximum Height									Maximum Height		
				For Shade Widths to 60"	144"	144"	144"	42"	102"	144"	132"	144"	144"	NA	NA	NA
				For Shade Widths to 66"	144"	126"	126"	42"	102"	126"	114"	144"	144"	NA	NA	NA
				For Shade Widths to 78"	144"	126"	126"	42"	84"	126"	108"	144"	144"	NA	NA	NA
				For Shade Widths to 84"	144"	126"	126"	42"	84"	126"	108"	144"	138"	144"	144"	84"
				For Shade Widths to 88"	144"	96"	96"	NA	84"	96"	96"	144"	138"	144"	144"	84"
				For Shade Widths to 90"	144"	NA	NA	NA	84"	96"	96"	144"	138"	144"	144"	84"
				For Shade Widths to 96"	144"	NA	N/A	NA	78"	78"	78"	144"	138"	144"	144"	84"
				For Shade Widths over 96"	144"	NA	N/A	NA	60"	60"	60"	144"	138"	144"	144"	84"
7% Sheerweave 5000 *(R34_S73)*	98"	NO	NO	Non-Railroaded												
				Maximum Width	98"**	88"	88"	NA	98"**	98"**	98"**	98"**	98"**	98"**	98"**	98"**
				**R Series clutch - max width - 96"	Maximum Height									Maximum Height		
				For Shade Widths to 60"	144"	114"	114"	NA	78"	114"	102"	144"	144"	NA	NA	NA
				For Shade Widths to 66"	144"	114"	114"	NA	78"	114"	102"	144"	138"	NA	NA	NA
				For Shade Widths to 78"	144"	96"	96"	NA	60"	96"	84"	144"	138"	NA	NA	NA
				For Shade Widths to 84"	144"	96"	96"	NA	60"	96"	84"	144"	126"	144"	144"	NA
				For Shade Widths to 88"	144"	96"	96"	NA	60"	96"	84"	144"	102"	144"	126"	NA
				For Shade Widths to 90"	144"	96"	96"	NA	60"	96"	84"	144"	102"	144"	126"	NA
				For Shade Widths to 96"	144"	NA	N/A	NA	60"	78"	78"	144"	102"	144"	126"	NA
				For Shade Widths over 96"	144"	NA	N/A	NA	60"	60"	60"	144"	102"	144"	126"	NA
10% E Screen	122"	YES	YES	Non-Railroaded												
				Maximum Width	122"**	112"	112"	84"	108"	120"	120"	122"**	122"**	122"**	122"**	122"**
					Maximum Height									Maximum Height		
				For Shade Widths to 78"	144"	144"	144"	72"	138"	144"	144"	144"	144"	NA	NA	NA
				For Shade Widths to 84"	144"	144"	144"	60"	138"	144"	144"	144"	144"	144"	144"	144"
				For Shade Widths to 90"	144"	138"	138"	NA	138"	138"	138"	144"	144"	144"	144"	144"
				For Shade Widths to 96"	144"	138"	138"	NA	108"	138"	115"	144"	144"	144"	144"	144"
				For Shade Widths over 96"	144"	138"	138"	NA	60"	138"	115"	144"	144"	144"	144"	144"
				Railroaded												
				Maximum Width	144"**	120"	120"	84"	108"	120"	120"	144"**	144"**	144"**	144"**	144"**
				**R Series clutch - max width - 120"	Maximum Height									Maximum Height		
				For Shade Widths to 78"	144"	144"	144"	72"	138"	144"	144"	144"	144"	NA	NA	NA
				For Shade Widths to 84"	144"	144"	144"	60"	138"	144"	144"	144"	144"	144"	144"	144"
				For Shade Widths to 90"	144"	138"	138"	NA	138"	138"	138"	144"	144"	144"	144"	144"
				For Shade Widths to 96"	144"	138"	138"	NA	108"	138"	115"	144"	144"	144"	144"	144"
				For Shade Widths to 108"	144"	138"	138"	NA	66"	138"	115"	144"	144"	144"	144"	144"
				For Shade Widths to 120"	144"	138"	138"	NA	NA	138"	115"	144"	144"	144"	144"	144"
				For Shade Widths over 120"	144"	NA	NA	NA	NA	NA	NA	144"	144"	144"	144"	144"
10% Sheerweave 2360	126"	NO	NO	Non-Railroaded												
				Maximum Width	126"**	116"	116"	90"	102"	120"	120"	126"**	126"**	126"**	126"**	126"**
				**R Series clutch - max width - 120"	Maximum Height									Maximum Height		
				For Shade Widths to 66"	144"	144"	144"	72"	144"	144"	144"	144"	144"	N/A	N/A	N/A
				For Shade Widths to 72"	144"	144"	144"	72"	138"	144"	144"	144"	144"	NA	NA	NA
				For Shade Widths to 78"	144"	144"	144"	72"	138"	144"	144"	144"	144"	NA	NA	NA
				For Shade Widths to 84"	144"	144"	144"	60"	138"	144"	144"	144"	144"	144"	144"	144"
				For Shade Widths to 90"	144"	144"	144"	42"	138"	144"	138"	144"	144"	144"	144"	144"
				For Shade Widths over 90"	144"	144"	144"	N/A	84"	144"	114"	144"	144"	144"	144"	144"

PRODUCT SIZE SPECIFICATIONS – CLUTCH LIFT

Minimum and Maximum Standards
For shades 12" wide, maximum length is 60"
All Patterns – Minimum Width: 12" Minimum Height: 12".
Spring Assist strongly recommended on shade sizes over 80" x 80".
For TouchLift Cordless specifications, please refer to Product Specifications – Touch Lift section.

Please Note: Shade sizes that are wider than the fabric roll width indicated will be made with the fabric turned width for length (railroaded). The maximum width for non-railroaded shades is the roll width unless otherwise noted.

Fabrics turned width for length will have a visible seam when fabricated longer than their maximum roll width less 10".
Fabrics turned width for length may have an edge curl. This is not considered a defect in the product.

Material Name	Roll Width	Railroad Option	Splice/ Seam		Standard Clutch	Fabric Valance	Deluxe Valance	Small Cassette	Medium Cassette	Large Cassette	3" Fascia	4" Fascia	Pocket Headrail	Spring Assist Clutch Standard Shade	Spring Assist Clutch 4" Fascia	Spring Assist Clutch Pocket
10% Sheerweave 4100	**98"**	YES	YES	**Non-Railroaded**												
				Maximum Width	**98"****	**88"**	**88"**	**84"**	**96"**	**96"**	**98"****	**98"****	**98"****	**98"****	**98"****	**98"****
				**R Series clutch - max width - 96"	**Maximum Height**									**Maximum Height**		
				For Shade Widths to 60"	144"	144"	144"	36"	96"	144"	126"	144"	144"	NA	NA	NA
				For Shade Widths to 66"	144"	120"	120"	36"	96"	120"	114"	144"	144"	NA	NA	NA
				For Shade Widths to 78"	144"	120"	120"	36"	78"	120"	108"	144"	144"	NA	NA	NA
				For Shade Widths to 84"	144"	120"	120"	36"	78"	120"	108"	144"	126"	144"	144"	78"
				For Shade Widths to 90"	144"	NA	NA	NA	78"	96"	96"	144"	126"	144"	144"	78"
				For Shade Widths to 96"	144"	NA	NA	NA	78"	78"	78"	144"	126"	144"	144"	78"
				For Shade Widths over 96"	144"	NA	NA	NA	NA	NA	60"	144"	126"	144"	144"	78"
				Railroaded												
				Maximum Width	**120"****	**102"****	**102"****	**84"**	**102"****	**102"****	**114"****	**120"****	**120"****	**120"****	**120"****	**120"****
				**R Series clutch - max width - 96"	**Maximum Height**									**Maximum Height**		
				For Shade Widths to 60"	120"	120"	120"	36"	96"	120"	126"	120"	120"	NA	NA	NA
				For Shade Widths to 78"	120"	120"	120"	36"	78"	120"	108"	120"	120"	NA	NA	NA
				For Shade Widths to 84"	120"	120"	120"	36"	78"	120"	108"	120"	120"	120"	120"	78"
				For Shade Widths to 90"	120"	96"	96"	NA	78"	96"	96"	120"	120"	120"	120"	78"
				For Shade Widths to 96"	120"	78"	78"	NA	78"	78"	78"	120"	120"	120"	120"	78"
				For Shade Widths over 96"	120"	60"	60"	NA	60"	60"	60"	120"	114"	120"	120"	78"
								*Small cassette - max shade size is 72" x 36"								
10% Sheerweave 5000 *(R26_03)*	**98"**	**NO**	**NO**	**Non-Railroaded**												
				Maximum Width	**98"****	**88"**	**88"**	**NA**	**96"**	**96"**	**96"**	**98"****	**98"****	**98"****	**98"****	**98"****
				**R Series clutch - max width - 96"	**Maximum Height**									**Maximum Height**		
				For Shade Widths to 60"	144"	102"	102"	NA	72"	102"	96"	144"	144"	NA	NA	NA
				For Shade Widths to 66"	144"	102"	102"	NA	72"	102"	96"	144"	126"	NA	NA	NA
				For Shade Widths to 72"	144"	90"	90"	NA	72"	90"	84"	144"	126"	NA	NA	NA
				For Shade Widths to 78"	144"	90"	90"	NA	60"	90"	78"	144"	126"	NA	NA	NA
				For Shade Widths to 84"	144"	90"	90"	NA	54"	90"	78"	144"	126"	144"	114"	NA
				For Shade Widths to 88"	144"	90"	90"	NA	54"	90"	78"	144"	96"	144"	114"	NA
				For Shade Widths to 90"	144"	N/A	N/A	NA	54"	90"	78"	144"	96"	144"	114"	NA
				For Shade Widths to 96"	144"	N/A	N/A	NA	54"	78"	78"	144"	96"	144"	114"	NA
				For Shade Widths over 96"	144"	N/A	N/A	NA	NA	N/A	NA	144"	96"	144"	114"	NA
10% Sheerweave 5000 *(R26_U16, U24, U28, U29)*	**98"**	**NO**	**NO**	**Non-Railroaded**												
				Maximum Width	**98"****	**88"**	**88"**	**NA**	**98"****	**98"****	**98"****	**98"****	**98"****	**98"****	**98"****	**98"****
				**R Series clutch - max width - 96"	**Maximum Height**									**Maximum Height**		
				For Shade Widths to 60"	144"	120"	120"	NA	84"	120"	108"	144"	144"	NA	NA	NA
				For Shade Widths to 66"	144"	114"	114"	NA	84"	114"	108"	144"	144"	NA	NA	NA
				For Shade Widths to 72"	144"	102"	102"	NA	84"	102"	90"	144"	144"	NA	NA	NA
				For Shade Widths to 78"	144"	102"	102"	NA	66"	102"	90"	144"	144"	NA	NA	NA
				For Shade Widths to 84"	144"	102"	102"	NA	66"	102"	90"	144"	126"	144"	132"	NA
				For Shade Widths to 88"	144"	96"	96"	NA	66"	96"	90"	144"	108"	144"	132"	NA
				For Shade Widths to 90"	144"	NA	NA	NA	66"	96"	90"	144"	108"	144"	132"	NA
				For Shade Widths to 96"	144"	NA	NA	NA	66"	78"	78"	144"	108"	144"	132"	NA
				For Shade Widths over 96"	144"	NA	NA	NA	60"	60"	60"	144"	108"	144"	132"	66"

PRODUCT SIZE SPECIFICATIONS – CLUTCH LIFT

Minimum and Maximum Standards
For shades 12" wide, maximum length is 60"
All Patterns – Minimum Width: 12" Minimum Height: 12".
Spring Assist strongly recommended on shade sizes over 80" x 80".
For TouchLift Cordless specifications, please refer to Product Specifications – Touch Lift section.

Please Note: Shade sizes that are wider than the fabric roll width indicated will be made with the fabric turned width for length (railroaded). The maximum width for non-railroaded shades is the roll width unless otherwise noted.

Fabrics turned width for length will have a visible seam when fabricated longer than their maximum roll width less 10".
Fabrics turned width for length may have an edge curl. This is not considered a defect in the product.

Material Name	Roll Width	Railroad Option	Splice/ Seam		Standard Clutch	Fabric Valance	Deluxe Valance	Small Cassette	Medium Cassette	Large Cassette	3" Fascia	4" Fascia	Pocket Headrail	Spring Assist Clutch Standard Shade	Spring Assist Clutch 4" Fascia	Spring Assist Clutch Pocket
Alexandria	78"	NO	NO	Non-Railroaded												
				Maximum Width	78"	70"	70"	78"	78"	78"	78"	78"	78"	NA	NA	NA
					Maximum Height									Maximum Height		
				For Shade Widths to 72"	144"	144"*	144"*	108"	144"	144"	144"	144"	144"	NA	NA	NA
				For Shade Widths to 78"	144"	NA	NA	108"	144"	144"	144"	144"	144"	NA	NA	NA
					*Fabric & Deluxe Valances - max shade size is 70" x 144"											
Astaire	94"	NO	NO	Non-Railroaded												
				Maximum Width	94"	NA	NA	NA	94"	94"	94"	94"	94"	94"	94"	94"
					Maximum Height									Maximum Height		
				For Shade Widths to 78"	144"	NA	NA	NA	96"	144"	126"	144"	144"	NA	NA	NA
				For Shade Widths to 84"	144"	NA	NA	NA	96"	120"	108"	144"	144"	144"	144"	80"
				For Shade Widths over 84"	144"	NA	NA	NA	78"	120"	108"	144"	144"	144"	144"	80"
Avila R Blackout	118"	YES	YES	Non-Railroaded												
				Maximum Width	118"	108"	108"	96"	118"	118"	118"	118"	118"	118"	118"	118"
					Maximum Height									Maximum Height		
				For Shade Widths to 78"	144"	144"	144"	84"	144"	144"	144"	144"	144"	NA	NA	NA
				For Shade Widths to 84"	144"	144"	144"	60"	144"	144"	144"	144"	144"	144"	144"	144"
				For Shade Widths to 90"	144"	144"	144"	42"	138"	144"	138"	144"	144"	144"	144"	144"
				For Shade Widths to 96"	144"	144"	144"	42"	108"	144"	132"	144"	144"	144"	144"	144"
				For Shade Widths over 96"	144"	144"	144"	NA	80"	144"	132"	144"	144"	144"	144"	144"
				Railroaded												
				Maximum Width	120"	120"	120"	96"	120"	120"	120"	120"	120"	120"	120"	120"
					Maximum Height									Maximum Height		
				For Shade Widths to 78"	144"	144"	144"	84"	144"	144"	144"	144"	144"	NA	NA	NA
				For Shade Widths to 84"	144"	144"	144"	60"	144"	144"	144"	144"	144"	144"	144"	144"
				For Shade Widths to 90"	144"	144"	144"	42"	138"	144"	138"	144"	144"	144"	144"	144"
				For Shade Widths to 96"	144"	144"	144"	42"	108"	144"	132"	144"	144"	144"	144"	144"
				For Shade Widths to 118"	144"	144"	144"	NA	80"	144"	132"	144"	144"	144"	144"	144"
				For Shade Widths over 118"	120"	120"	120"	NA	78"	120"	120"	120"	120"	120"	120"	120"
Baroque	78"	NO	NO	Non-Railroaded												
				Maximum Width	78"	66"	66"	78"	78"	78"	78"	78"	78"	NA	NA	NA
					Maximum Height									Maximum Height		
				For Shade Widths to 66"	144"	144"	144"	84"	144"	144"	144"	144"	144"	NA	NA	NA
				For Shade Widths over 66"	144"	NA	NA	84"	144"	144"	144"	144"	144"	NA	NA	NA
Blackout - Solid	72"	YES	YES	Non-Railroaded												
				Maximum Width	72"	60"	60"	72"	72"	72"	72"	72"	72"	NA	NA	NA
					Maximum Height									Maximum Height		
				For Shade Widths to 60"	144"	NA	144"	126"	144"	144"	144"	144"	144"	NA	NA	NA
				For Shade Widths to 66"	144"	NA	NA	126"	144"	144"	144"	144"	144"	NA	NA	NA
				For Shade Widths over 66"	144"	NA	NA	114"	144"	144"	144"	144"	144"	NA	NA	NA
				Railroaded												
				Maximum Width	144"**	120"	120"	114"**	120"	120"	120"	144"**	144"**	144"**	144"**	144"**
				**R Series clutch - max width - 120"	Maximum Height									Maximum Height		
				For Shade Widths to 66"	130"	NA	130"	126"	130"	130"	130"	130"	130"	NA	NA	NA
				For Shade Widths to 72"	130"	NA	130"	114"	130"	130"	130"	130"	130"	NA	NA	NA
				For Shade Widths over 72"	130"	NA	130"	48"	120"	130"	130"	130"	130"	130"	130"	130"
Brilliance	118"	NO	NO	Non-Railroaded												
				Maximum Width	118"	108"	108"	96"	118"	118"	118"	118"	118"	118"	118"	118"
					Maximum Height									Maximum Height		
				For Shade Widths to 78"	144"	144"	144"	80"	144"	144"	144"	144"	144"	NA	NA	NA
				For Shade Widths to 84"	144"	144"	144"	80"	144"	144"	144"	144"	144"	144"	144"	144"
				For Shade Widths to 90"	144"	144"	144"	72"	144"	144"	144"	144"	144"	144"	144"	144"
				For Shade Widths over 90"	144"	144"	144"	48"	72	144"	126"	144"	144"	144"	144"	144"
Brilliance Blackout	118"	NO	NO	Non-Railroaded												
				Maximum Width	118"	108"	108"	90"	108"	118"	118"	118"	118"	118"	118"	118"
					Maximum Height									Maximum Height		
				For Shade Widths to 78"	144"	144"	144"	60"	114"	144"	144"	144"	144"	NA	NA	NA
				For Shade Widths to 84"	144"	144"	144"	60"	114"	144"	144"	144"	144"	144"	144"	120"
				For Shade Widths to 90"	144"	138"	138"	42"	114"	138"	138"	144"	144"	144"	144"	120"
				For Shade Widths over 90"	144"	114"	114"	NA	66"	114"	96"	144"	144"	144"	144"	120"

PRODUCT SIZE SPECIFICATIONS – CLUTCH LIFT

Minimum and Maximum Standards
For shades 12" wide, maximum length is 60"
All Patterns – Minimum Width: 12" Minimum Height: 12".
Spring Assist strongly recommended on shade sizes over 80" x 80".
For TouchLift Cordless specifications, please refer to Product Specifications – Touch Lift section.

Please Note: Shade sizes that are wider than the fabric roll width indicated will be made with the fabric turned width for length (railroaded). The maximum width for non-railroaded shades is the roll width unless otherwise noted.

Fabrics turned width for length will have a visible seam when fabricated longer than their maximum roll width less 10".
Fabrics turned width for length may have an edge curl. This is not considered a defect in the product.

Material Name	Roll Width	Railroad Option	Splice/ Seam		Standard Clutch	Fabric Valance	Deluxe Valance	Small Cassette	Medium Cassette	Large Cassette	3" Fascia	4" Fascia	Pocket Headrail	Spring Assist Clutch Standard Shade	Spring Assist Clutch 4" Fascia	Spring Assist Clutch Pocket
Carrara	110"	NO	NO	Non-Railroaded												
				Maximum Width	110"	100"	100"	96"	110"	110"	110"	110"	110"	110"	110"	110"
					Maximum Height									Maximum Height		
				For Shade Widths to 78"	144"	144"	144"	84"	144"	144"	144"	144"	144"	NA	NA	NA
				For Shade Widths to 84"	144"	144"	144"	60"	144"	144"	144"	144"	144"	144"	144"	144"
				For Shade Widths to 90"	144"	144"	144"	42"	138"	144"	138"	144"	144"	144"	144"	144"
				For Shade Widths to 96"	144"	144"	144"	NA	108"	144"	138"	144"	144"	144"	144"	144"
				For Shade Widths over 90"	144"	144"	144"	NA	66"	144"	138"	144"	144"	144"	144"	144"
Carrara Blackout	110"	NO	NO	Non-Railroaded												
				Maximum Width	110"**	96"	96"	84"	108"**	108"**	108"**	110"**	110"**	110"**	110"**	110"**
				**R Series clutch - max width - 96"	Maximum Height									Maximum Height		
				For Shade Widths to 66"	144"	144"	144"	48"	114"	144"	132"	144"	144"	NA	NA	NA
				For Shade Widths to 72"	144"	144"	144"	48"	96"	144"	132"	144"	144"	NA	NA	NA
				For Shade Widths to 84"	144"	126"	126"	42"	96"	126"	126"	144"	144"	144"	144"	102"
				For Shade Widths to 90"	144"	96"	96"	NA	96"	96"	96"	144"	144"	144"	144"	102"
				For Shade Widths to 96"	144"	96"	96"	NA	78"	96"	78"	144"	144"	144"	144"	102"
				For Shade Widths to 102"	144"	NA	NA	NA	60"	60"	60"	144"	144"	144"	144"	102"
				For Shade Widths over 102"	144"	NA	NA	NA	48"	48"	48"	144"	138"	144"	144"	102"
Claudio	110"	NO	NO	Non-Railroaded												
				Maximum Width	110"	100"	100"	96"	110"	110"	110"	110"	110"	110"	110"	110"
					Maximum Height									Maximum Height		
				For Shade Widths to 78"	144"	144"	144"	96"	144"	144"	144"	144"	144"	NA	NA	NA
				For Shade Widths to 84"	144"	144"	144"	96"	144"	144"	144"	144"	144"	144"	144"	144"
				For Shade Widths to 90"	144"	144"	144"	72"	144"	144"	144"	144"	144"	144"	144"	144"
				For Shade Widths over 90"	144"	144"	144"	48"	90"	144"	144"	144"	144"	144"	144"	144"
Claudio Blackout	110"	NO	NO	Non-Railroaded												
				Maximum Width	110"	100"	100"	90"	108"	110"	110"	110"	110"	110"	110"	110"
					Maximum Height									Maximum Height		
				For Shade Widths to 78"	144"	144"	144"	60"	114"	144"	144"	144"	144"	NA	NA	NA
				For Shade Widths to 84"	144"	144"	144"	60"	114"	144"	144"	144"	144"	144"	144"	120"
				For Shade Widths to 90"	144"	138"	138"	42"	114"	138"	138"	144"	144"	144"	144"	120"
				For Shade Widths over 90"	144"	120"	120"	NA	66"	120"	96"	144"	144"	144"	144"	120"
Cusco	110"	YES	YES	Non-Railroaded												
				Maximum Width	110"	100"	100"	90"	110"	110"	110"	110"	110"	110"	110"	110"
					Maximum Height									Maximum Height		
				For Shade Widths to 78"	144"	144"	144"	66"	126"	144"	144"	144"	144"	NA	NA	NA
				For Shade Widths to 84"	144"	144"	144"	60"	126"	144"	144"	144"	144"	144"	144"	132"
				For Shade Widths to 90"	144"	138"	138"	42"	126"	138"	138"	144"	144"	144"	144"	132"
				For Shade Widths to 96"	144"	132"	132"	NA	108"	132"	108"	144"	144"	144"	144"	132"
				For Shade Widths to 100"	144"	132"	132"	NA	84"	132"	108"	144"	144"	144"	144"	132"
				For Shade Widths to 102"	144"	NA	NA	NA	84"	132"	108"	144"	144"	144"	144"	132"
				For Shade Widths over 102"	144"	NA	NA	NA	60"	132"	108"	144"	144"	144"	144"	132"
				Railroaded												
				Maximum Width	144"**	120"	120"	90"	120"	120"	120"	144"**	144"**	144"**	144"**	144"**
				**R Series clutch - max width - 120"	Maximum Height									Maximum Height		
				For Shade Widths to 78"	144"	144"	144"	66"	126"	144"	144"	144"	144"	NA	NA	NA
				For Shade Widths to 84"	144"	144"	144"	60"	126"	144"	144"	144"	144"	144"	144"	132"
				For Shade Widths to 90"	144"	138"	138"	42"	126"	138"	138"	144"	144"	144"	144"	132"
				For Shade Widths to 96"	144"	132"	132"	NA	108"	132"	108"	144"	144"	144"	144"	132"
				For Shade Widths to 102"	144"	132"	132"	NA	84"	132"	108"	144"	144"	144"	144"	132"
				For Shade Widths to 110"	144"	132"	132"	NA	60"	132"	108"	144"	144"	144"	144"	132"
				For Shade Widths over 110"	144"	132"	132"	NA	60"	132"	108"	144"	132"	144"	144"	132"
Darien	90"	NO	NO	Non-Railroaded												
				Maximum Width	90"	80"	80"	90"	90"	90"	90"	90"	90"	90"	90"	90"
					Maximum Height									Maximum Height		
				For Shade Widths to 78"	144"	144"	144"	114"	144"	144"	144"	144"	144"	NA	NA	NA
				For Shade Widths to 80"	144"	144"	144"	102"	144"	144"	144"	144"	144"	144"	144"	144"
				For Shade Widths to 84"	144"	NA	NA	102"	144"	144"	144"	144"	144"	144"	144"	144"
				For Shade Widths over 84"	144"	NA	NA	72"	144"	144"	144"	144"	144"	144"	144"	144"

PRODUCT SIZE SPECIFICATIONS – CLUTCH LIFT

Minimum and Maximum Standards
For shades 12" wide, maximum length is 60"
All Patterns – Minimum Width: 12" Minimum Height: 12".
Spring Assist strongly recommended on shade sizes over 80" x 80".
For TouchLift Cordless specifications, please refer to Product Specifications – Touch Lift section.

Please Note: Shade sizes that are wider than the fabric roll width indicated will be made with the fabric turned width for length (railroaded). The maximum width for non-railroaded shades is the roll width unless otherwise noted.

Fabrics turned width for length will have a visible seam when fabricated longer than their maximum roll width less 10".
Fabrics turned width for length may have an edge curl. This is not considered a defect in the product.

Material Name	Roll Width	Railroad Option	Splice/ Seam		Standard Clutch	Fabric Valance	Deluxe Valance	Small Cassette	Medium Cassette	Large Cassette	3" Fascia	4" Fascia	Pocket Headrail	Spring Assist Clutch Standard Shade	Spring Assist Clutch 4" Fascia	Spring Assist Clutch Pocket
Drizzle	94"	YES	YES	Non-Railroaded												
				Maximum Width	94"	84"	84"	94"	94"	94"	94"	94"	94"	94"	94"	94"
					Maximum Height									Maximum Height		
				For Shade Widths to 72"	144"	144"*	144"*	90"	144"	144"	144"	144"	144"	NA	NA	NA
				For Shade Widths to 78"	144"	144"	NA	90"	144"	144"	144"	144"	144"	NA	NA	NA
				For Shade Widths to 84"	144"	144"	144"	90"	144"	144"	144"	144"	144"	144"	144"	144"
				For Shade Widths to 90"	144"	NA	NA	72"	144"	144"	144"	144"	144"	144"	144"	144"
				For Shade Widths over 90"	144"	NA	NA	48"	144"	144"	144"	144"	144"	144"	144"	144"
					* Fabric & Deluxe Valances - max shade size is 84" x 144"											
				Railroaded												
				Maximum Width	120"	120"	120"	96"	120"	120"	120"	120"	120"	120"	120"	120"
					Maximum Height									Maximum Height		
				For Shade Widths to 72"	144"	144"	144"	90"	144"	144"	144"	144"	144"	NA	NA	NA
				For Shade Widths to 78"	140"	140"	140"	90"	140"	140"	140"	140"	140"	NA	NA	NA
				For Shade Widths to 84"	120"	120"	120"	90"	120"	120"	120"	120"	120"	120"	120"	120"
				For Shade Widths to 90"	120"	120"	120"	72"	120"	120"	120"	120"	120"	120"	120"	120"
				For Shade Widths to 96"	120"	120"	120"	48"	120"	120"	120"	120"	120"	120"	120"	120"
				For Shade Widths over 96"	120"	120"	120"	NA	85"	120"	120"	120"	120"	120"	120"	120"
Fiona	78"	NO	NO	Non-Railroaded												
				Maximum Width	78"	70"	70"	78"	78"	78"	78"	78"	78"	NA	NA	NA
					Maximum Height									Maximum Height		
				For Shade Widths to 70"	144"	144"	144"	90"	144"	144"	144"	144"	144"	NA	NA	NA
				For Shade Widths to 72"	144"	NA	NA	90"	144"	144"	144"	144"	144"	NA	NA	NA
				For Shade Widths over 72"	144"	NA	NA	84"	144"	144"	144"	144"	144"	NA	NA	NA
Flocke Blackout	94"	YES	YES	Non-Railroaded												
				Maximum Width	94"	84"	84"	72"	94"	94"	94"	94"	94"	94"	94"	94"
					Maximum Height									Maximum Height		
				For Shade Widths to 78"	144"	144"	144"	60"*	114"	144"	144"	144"	144"	NA	NA	NA
				For Shade Widths to 84"	144"	126"	126"	NA	114"	126"	126"	144"	144"	144"	144"	132"
				For Shade Widths to 90"	144"	NA	NA	NA	96"	96"	96"	144"	144"	144"	144"	132"
				For Shade Widths over 90"	144"	NA	NA	NA	78"	78"	78"	144"	144"	144"	144"	132"
					*Small cassette - max shade size is 72" x 60"											
				Railroaded												
				Maximum Width	144"**	96"	96"	72"	96"	96"	96"	144"**	144"**	144"**	144"**	144"**
				**R Series clutch - max width - 96"	Maximum Height									Maximum Height		
				For Shade Widths to 78"	144"	144"	144"	60"*	114"	144"	144"	144"	144"	NA	NA	NA
				For Shade Widths to 84"	144"	126"	126"	NA	114"	126"	126"	144"	144"	144"	144"	132"
				For Shade Widths to 90"	144"	96"	96"	NA	96"	96"	96"	144"	144"	144"	144"	132"
				For Shade Widths to 96"	144"	78"	78"	NA	78"	78"	78"	144"	144"	144"	144"	132"
				For Shade Widths over 96"	144"	NA	NA	NA	NA	NA	NA	144"	132"	144"	144"	132"
					*Small cassette - max shade size is 72" x 60"											
Hayworth	98"	YES	YES	Non-Railroaded												
				Maximum Width	98"	90"	90"	96"	98"	98"	98"	98"	98"	98"	98"	98"
					Maximum Height									Maximum Height		
				For Shade Widths to 84"	144"	144"	144"	102"	144"	144"	144"	144"	144"	144"	144"	144"
				For Shade Widths to 90"	144"	144"	144"	72"	144"	144"	144"	144"	144"	144"	144"	144"
				For Shade Widths over 90"	144"	NA	NA	48"	144"	144"	144"	144"	144"	144"	144"	144"
				Railroaded												
				Maximum Width	144"**	126"	126"	126"	126"	126"	126"	144"**	144"**	144"**	144"**	144"**
				**R Series clutch - max width -126 "	Maximum Height									Maximum Height		
				For Shade Widths to 84"	144"	144"	144"	102"	144"	144"	144"	144"	144"	144"	144"	144"
				For Shade Widths to 90"	144"	144"	144"	72"	144"	144"	144"	144"	144"	144"	144"	144"
				For Shade Widths to 98"	144"	144"	144"	48"	144"	144"	144"	144"	144"	144"	144"	144"
				For Shade Widths over 98"	144"	144"	144"	42"	120"	144"	144"	144"	144"	144"	144"	144"
Illusion	72"	YES	NO	Non-Railroaded												
				Maximum Width	72"	62"	62"	72"	72"	72"	72"	72"	72"	NA	NA	NA
					Maximum Height									Maximum Height		
				For Shade Widths to 62"	144"	144"	144"	78"	144"	144"	144"	144"	144"	NA	NA	NA
				For Shade Widths over 62"	144"	NA	NA	78"	144"	144"	144"	144"	144"	NA	NA	NA
				Railroaded												
				Maximum Width	120"	120"	120"	96"	120"	120"	120"	120"	120"	120"	120"	120"
					Maximum Height									Maximum Height		
				For Shade Widths to 72"	60"	60"	60"	60"	60"	60"	60"	60"	60"	NA	NA	NA
				For Shade Widths over 72"	60"	60"	60"	48"	60"	60"	60"	60"	60"	NA	NA	NA

PRODUCT SIZE SPECIFICATIONS – CLUTCH LIFT

Minimum and Maximum Standards
For shades 12" wide, maximum length is 60"
All Patterns – Minimum Width: 12" Minimum Height: 12".
Spring Assist strongly recommended on shade sizes over 80" x 80".
For TouchLift Cordless specifications, please refer to Product Specifications – Touch Lift section.

Please Note: Shade sizes that are wider than the fabric roll width indicated will be made with the fabric turned width for length (railroaded). The maximum width for non-railroaded shades is the roll width unless otherwise noted.

Fabrics turned width for length will have a visible seam when fabricated longer than their maximum roll width less 10".
Fabrics turned width for length may have an edge curl. This is not considered a defect in the product.

Material Name	Roll Width	Railroad Option	Splice/ Seam		Standard Clutch	Fabric Valance	Deluxe Valance	Small Cassette	Medium Cassette	Large Cassette	3" Fascia	4" Fascia	Pocket Headrail	Spring Assist Clutch Standard Shade	Spring Assist Clutch 4" Fascia	Spring Assist Clutch Pocket
Jasper	110"	YES	YES	Non-Railroaded												
				Maximum Width	110"	100"	100"	72"	108"	110"	110"	110"	110"	110"	110"	110"
					Maximum Height									Maximum Height		
				For Shade Widths to 84"	144"	144"	144"	60"*	144"	144"	144"	144"	144"	144"	144"	144"
				For Shade Widths to 90"	144"	138"	138"	NA	138"	144"	138"	144"	144"	144"	144"	144"
				For Shade Widths to 96"	144"	108"	108"	NA	108"	144"	120"	144"	144"	144"	144"	144"
				For Shade Widths over 96"	144"	84"	84"	NA	70"	144"	120"	144"	144"	144"	144"	144"
					*Small cassette - max shade size is 72" x 60"											
				Railroaded												
				Maximum Width	144"**	120"	120"	72"	108"	120"	120"	144"**	144"**	144"**	144"**	144"**
				**R Series clutch - max width - 120"	Maximum Height									Maximum Height		
				For Shade Widths to 84"	144"	144"	144"	60"*	144"	144"	144"	144"	144"	144"	144"	144"
				For Shade Widths to 90"	144"	144"	144"	NA	138"	144"	138"	144"	144"	144"	144"	144"
				For Shade Widths to 96"	144"	144"	144"	NA	108"	144"	120"	144"	144"	144"	144"	144"
				For Shade Widths to 102"	144"	144"	144"	NA	84"	144"	120"	144"	144"	144"	144"	144"
				For Shade Widths over 102"	144"	144"	144"	NA	70"	144"	120"	144"	144"	144"	144"	144"
					*Small cassette - max shade size is 72" x 60"											
Linview	122"	YES	YES	Non-Railroaded												
Note: Heat sealed is requried beyond 120"x120".				Maximum Width	122"	112"	112"	96"	122"	122"	122"	122"	122"	122"	122"	122"
					Maximum Height									Maximum Height		
				For Shade Widths to 84"	144"	144"	144"	90"	144"	144"	144"	144"	144"	144"	144"	144"
				For Shade Widths to 90"	144"	144"	144"	72"	144"	144"	144"	144"	144"	144"	144"	144"
				For Shade Widths to 96"	144"	144"	144"	48"	144	144"	144"	144"	144"	144"	144"	144"
				For Shade Widths to 112"	144"	144"	144"	NA	84"	144"	144"	144"	144"	144"	144"	144"
				For Shade Widths over 112"	144"	NA	NA	NA	42"	144"	144"	144"	144"	144"	144"	144"
				Railroaded												
				Maximum Width	120"	120"	120"	96"	120"	120"	120"	120"	120"	120"	120"	120"
					Maximum Height									Maximum Height		
				For Shade Widths to 84"	120"	120"	120"	90"	120"	120"	120"	120"	120"	120"	120"	120"
				For Shade Widths to 90"	120"	120"	120"	72"	120"	120"	120"	120"	120"	120"	120"	120"
				For Shade Widths to 96"	120"	120"	120"	48"	120"	120"	120"	120"	120"	120"	120"	120"
				For Shade Widths over 96"	120"	120"	120"	NA	60"	120"	120"	120"	120"	120"	120"	120"
Linview Blackout	94"	NO	NO	Non-Railroaded												
				Maximum Width	94"	84"	84"	94"	94"	94"	94"	94"	94"	94"	94"	94"
					Maximum Height									Maximum Height		
				For Shade Widths to 78"	144"	144"	144"	78"	144"	144"	144"	144"	144"	NA	NA	NA
				For Shade Widths to 84"	144"	144"	144"	60"	144"	144"	144"	144"	144"	144"	144"	144"
				For Shade Widths to 90"	144"	NA	NA	42"	138"	144"	138"	144"	144"	144"	144"	144"
				For Shade Widths over 90"	144"	NA	NA	38"	108"	144"	132"	144"	144"	144"	144"	144"
Montero	94"	NO	NO	Non-Railroaded												
				Maximum Width	94"	84"	84"	72"	94"	94"	94"	94"	94"	94"	94"	94"
					Maximum Height									Maximum Height		
				For Shade Widths to 78"	144"	144"	144"	60"*	132"	144"	144"	144"	144"	NA	NA	NA
				For Shade Widths to 84"	144"	138"	138"	NA	132"	138"	138"	144"	144"	144"	144"	138"
				For Shade Widths to 90"	144"	NA	NA	NA	108"	108"	108"	144"	144"	144"	144"	138"
				For Shade Widths over 90"	144"	NA	NA	NA	84"	84"	84"	144"	138"	144"	144"	138"
					*Small cassette - max shade size is 72" x 60"											
Moravia	96"	NO	NO	Non-Railroaded												
				Maximum Width	96"	86"	86"	96"	96"	96"	96"	96"	96"	96"	96"	96"
					Maximum Height									Maximum Height		
				For Shade Widths to 78"	144"	144"	144"	74"	144"	144"	144"	144"	144"	NA	NA	NA
				For Shade Widths to 84"	144"	144"	144"	74"	138"	144"	144"	144"	144"	144"	144"	144"
				For Shade Widths to 86"	144"	144"	144"	72"	138"	144"	144"	144"	144"	144"	144"	144"
				For Shade Widths to 90"	144"	NA	NA	72"	138"	144"	144"	144"	144"	144"	144"	144"
				For Shade Widths over 90"	144"	NA	NA	48"	138"	144"	144"	144"	144"	144"	144"	144"
Santa Cruz	94"	NO	NO	Non-Railroaded												
				Maximum Width	94"	84"	84"	72"	94"	94"	94"	94"	94"	94"	94"	94"
					Maximum Height									Maximum Height		
				For Shade Widths to 78"	144"	144"	144"	60"*	132"	144"	144"	144"	144"	NA	NA	NA
				For Shade Widths to 84"	144"	138"	138"	NA	132"	138"	138"	144"	144"	144"	144"	144"
				For Shade Widths to 90"	144"	NA	NA	NA	108"	108"	108"	144"	144"	144"	144"	144"
				For Shade Widths over 90"	144"	NA	NA	NA	84"	84"	84"	144"	138"	144"	144"	138"
					*Small cassette - max shade size is 72" x 60"											
Santa Cruz Blackout	94"	NO	NO	Non-Railroaded												
				Maximum Width	94"	84"	84"	84"	94"	94"	94"	94"	94"	94"	94"	94"
					Maximum Height									Maximum Height		
				For Shade Widths to 72"	144"	144"	144"	48"	114"	144"	138"	144"	144"	NA	NA	NA
				For Shade Widths to 78"	144"	144"	144"	48"	102"	144"	138"	144"	144"	NA	NA	NA
				For Shade Widths to 84"	144"	126"	126"	42"	102"	126"	126"	144"	144"	144"	144"	102"
				For Shade Widths to 90"	144"	NA	NA	NA	96"	102"	96"	144"	144"	144"	144"	102"
				For Shade Widths over 90"	144"	NA	NA	NA	78"	102"	84"	144"	144"	144"	144"	102"

PRODUCT SIZE SPECIFICATIONS – CLUTCH LIFT

Minimum and Maximum Standards
For shades 12" wide, maximum length is 60"
All Patterns – Minimum Width: 12" Minimum Height: 12".
Spring Assist strongly recommended on shade sizes over 80" x 80".
For TouchLift Cordless specifications, please refer to Product Specifications – Touch Lift section.

Please Note: Shade sizes that are wider than the fabric roll width indicated will be made with the fabric turned width for length (railroaded). The maximum width for non-railroaded shades is the roll width unless otherwise noted.

Fabrics turned width for length will have a visible seam when fabricated longer than their maximum roll width less 10".
Fabrics turned width for length may have an edge curl. This is not considered a defect in the product.

Material Name	Roll Width	Railroad Option	Splice/ Seam		Standard Clutch	Fabric Valance	Deluxe Valance	Small Cassette	Medium Cassette	Large Cassette	3" Fascia	4" Fascia	Pocket Headrail	Spring Assist Clutch Standard Shade	Spring Assist Clutch 4" Fascia	Spring Assist Clutch Pocket
Scala Blackout	110"	YES	YES	Non-Railroaded												
				Maximum Width	110"	100"	100"	72"	110"	110"	110"	110"	110"	110"	110"	110"
					Maximum Height									Maximum Height		
				For Shade Widths to 84"	144"	NA	144"	74"*	144"	144"	144"	144"	144"	144"	144"	144"
				For Shade Widths to 90"	144"	NA	144"	NA	138"	144"	138"	144"	144"	144"	144"	144"
				For Shade Widths to 96"	144"	NA	144"	NA	108"	144"	132"	144"	144"	144"	144"	144"
				For Shade Widths over 96"	144"	NA	144"	NA	72"	144"	132"	144"	144"	144"	144"	144"
					*Small cassette - max shade width is 72" x 74"											
				Railroaded												
				Maximum Width	144"**	120"	120"	72"	114"	120"	120"	144"**	144"**	144"**	144"**	144"**
				**R Series clutch - max width - 120"	Maximum Height									Maximum Height		
				For Shade Widths to 84"	144"	NA	144"	74"*	144"	144"	144"	144"	144"	144"	144"	144"
				For Shade Widths to 90"	144"	NA	144"	NA	138"	144"	138"	144"	144"	144"	144"	144"
				For Shade Widths to 96"	144"	NA	144"	NA	108"	144"	132"	144"	144"	144"	144"	144"
				For Shade Widths to 102"	144"	NA	144"	NA	84"	144"	132"	144"	144"	144"	144"	144"
				For Shade Widths over 102"	144"	NA	144"	NA	72"	144"	132"	144"	144"	144"	144"	144"
					*Small cassette - max shade width is 72" x 74"											
Sheerweave 7200R	118"	NO	NO	Non-Railroaded												
				Maximum Width	118"	108"	108"	90"	114"	118"	118"	118"	118"	118"	118"	118"
					Maximum Height									Maximum Height		
				For Shade Widths to 66"	144"	144"	144"	60"	144"	144"	144"	144"	144"	NA	NA	NA
				For Shade Widths to 72"	144"	144"	144"	60"	114"	144"	144"	144"	144"	NA	NA	NA
				For Shade Widths to 78"	144"	144"	144"	60"	114"	144"	144"	144"	144"	NA	NA	NA
				For Shade Widths to 84"	144"	144"	144"	60"	114"	144"	144"	144"	144"	144"	144"	120"
				For Shade Widths to 90"	144"	138"	138"	42"	114"	138"	138"	144"	144"	144"	144"	120"
				For Shade Widths to 108"	144"	114"	114"	NA	66"	114"	96"	144"	144"	144"	144"	120"
				For Shade Widths over 108"	144"	NA	NA	NA	48"	114"	96"	144"	144"	144"	144"	120"
Sheerweave 7250R	118"	NO	NO	Non-Railroaded												
				Maximum Width	96"	96"	96"	96"	96"	96"	96"	96"	96"	96"	96"	96"
					Maximum Height									Maximum Height		
				For Shade Widths to 78"	120"	120"	120"	78"	120"	120"	120"	120"	120"	NA	NA	NA
				For Shade Widths to 84"	120"	120"	120"	78"	120"	120"	120"	120"	120"	120"	120"	120"
				For Shade Widths to 90"	120"	120"	120"	72"	120"	120"	120"	120"	120"	120"	120"	120"
				For Shade Widths over 90"	120"	120"	120"	48"	120"	120"	120"	120"	120"	120"	120"	120"
Sheerweave 7400	118"	NO	NO	Non-Railroaded												
				Maximum Width	116"	108"	108"	84"	108"	108"	116"	116"	116"	116"	116"	116"
					Maximum Height									Maximum Height		
				For Shade Widths to 66"	144"	132"	132"	42"	108"	132"	114"	144"	144"	NA	NA	NA
				For Shade Widths to 72"	144"	132"	132"	42"	84"	132"	114"	144"	144"	NA	NA	NA
				For Shade Widths to 84"	144"	126"	126"	42"	84"	126"	114"	144"	144"	144"	144"	90"
				For Shade Widths to 90"	144"	96"	96"	NA	84"	96"	96"	144"	144"	144"	144"	90"
				For Shade Widths to 96"	144"	84"	84"	NA	78"	84"	78"	144"	144"	144"	144"	90"
				For Shade Widths to 102"	144"	60"	60"	NA	60"	60"	66"	144"	144"	144"	144"	90"
				For Shade Widths over 102"	144"	48"	48"	NA	48"	48"	66"	144"	114"	144"	144"	90"
Sheerweave 7450	118"	NO	NO	Non-Railroaded												
				Maximum Width	118"	108"	108"	96"	118"	118"	118"	118"	118"	118"	118"	118"
					Maximum Height									Maximum Height		
				For Shade Widths to 78"	144"	144"	144"	66"	144"	144"	144"	144"	144"	NA	NA	NA
				For Shade Widths to 84"	144"	144"	144"	66"	132"	144"	144"	144"	144"	144"	144"	138"
				For Shade Widths to 90"	144"	144"	144"	66"	132"	144"	144"	144"	144"	144"	144"	138"
				For Shade Widths to 96"	144"	144"	144"	48"	132"	144"	144"	144"	144"	144"	144"	138"
				For Shade Widths to 108"	144"	138"	138"	NA	108"	138"	108"	144"	144"	144"	144"	138"
				For Shade Widths over 108"	144"	138"	138"	NA	60"	138"	60"	144"	144"	144"	144"	138"
Sheerweave 7500	118"	NO	NO	Non-Railroaded												
				Maximum Width	96"	NA	96"	90"	96"	96"	96"	96"	96"	96"	96"	96"
					Maximum Height									Maximum Height		
				For Shade Widths to 66"	120"	NA	120"	108"	120"	120"	120"	120"	120"	N/A	NA	NA
				For Shade Widths to 72"	120"	NA	120"	108"	120"	120"	120"	120"	120"	NA	NA	NA
				For Shade Widths to 78"	120"	NA	120"	84"	120"	120"	120"	120"	120"	NA	NA	NA
				For Shade Widths to 84"	120"	NA	120"	60"	120"	120"	120"	120"	120"	120"	120"	120"
				For Shade Widths to 90"	120"	NA	120"	42"	120"	120"	120"	120"	120"	120"	120"	120"
				For Shade Widths over 90"	120"	NA	120"	NA	108"	120"	120"	120"	120"	120"	120"	120"
Sheerweave 7500R	118"	NO	NO	Non-Railroaded												
				Maximum Width	118"	NA	108"	90"	114"	118"	118"	118"	118"	118"	118"	118"
					Maximum Height									Maximum Height		
				For Shade Widths to 66"	144"	NA	144"	108"	144"	144"	144"	144"	144"	NA	NA	NA
				For Shade Widths to 72"	144"	NA	144"	108"	144"	144"	144"	144"	144"	NA	NA	NA
				For Shade Widths to 78"	144"	NA	144"	84"	144"	144"	144"	144"	144"	NA	NA	NA
				For Shade Widths to 84"	144"	NA	144"	60"	144"	144"	144"	144"	144"	144"	144"	144"
				For Shade Widths to 90"	144"	NA	144"	42"	138"	144"	144"	144"	144"	144"	144"	144"
				For Shade Widths to 108"	144"	NA	144"	NA	66"	144"	144"	144"	144"	144"	144"	144"
				For Shade Widths over 108"	144"	NA	NA	NA	48"	144"	144"	144"	144"	144"	144"	144"

PRODUCT SIZE SPECIFICATIONS – CLUTCH LIFT

Minimum and Maximum Standards
For shades 12" wide, maximum length is 60"
All Patterns – Minimum Width: 12" Minimum Height: 12".
Spring Assist strongly recommended on shade sizes over 80" x 80".
For TouchLift Cordless specifications, please refer to Product Specifications – Touch Lift section.

Please Note: Shade sizes that are wider than the fabric roll width indicated will be made with the fabric turned width for length (railroaded). The maximum width for non-railroaded shades is the roll width unless otherwise noted.

Fabrics turned width for length will have a visible seam when fabricated longer than their maximum roll width less 10".
Fabrics turned width for length may have an edge curl. This is not considered a defect in the product.

Material Name	Roll Width	Railroad Option	Splice/ Seam		Standard Clutch	Fabric Valance	Deluxe Valance	Small Cassette	Medium Cassette	Large Cassette	3" Fascia	4" Fascia	Pocket Headrail	Spring Assist Clutch Standard Shade	Spring Assist Clutch 4" Fascia	Spring Assist Clutch Pocket
Sheerweave 7600	**118"**	NO	NO	**Non-Railroaded**												
				Maximum Width	**118"**	**108"**	**108"**	**90"**	**114"**	**118"**	**118"**	**118"**	**118"**	**118"**	**118"**	**118"**
					Maximum Height									**Maximum Height**		
				For Shade Widths to 66"	144"	144"	144"	66"	144"	144"	144"	144"	144"	NA	NA	NA
				For Shade Widths to 72"	144"	144"	144"	66"	126"	144"	144"	144"	144"	NA	NA	NA
				For Shade Widths to 78"	144"	144"	144"	66"	126"	144"	144"	144"	144"	NA	NA	NA
				For Shade Widths to 84"	144"	144"	144"	60"	126"	144"	144"	144"	144"	144"	144"	132"
				For Shade Widths to 90"	144"	138"	138"	42"	126"	138"	138"	144"	144"	144"	144"	132"
				For Shade Widths to 108"	144"	132"	132"	NA	66"	132"	108"	144"	144"	144"	144"	132"
				For Shade Widths over 108"	144"	NA	NA	NA	48"	132"	108"	144"	144"	144"	144"	132"
Sheerweave 7650	**118"**	NO	NO	**Non-Railroaded**												
				Maximum Width	**116"**	**106"**	**106"**	**96"**	**116"**	**116"**	**116"**	**116"**	**116"**	**116"**	**116"**	**116"**
					Maximum Height									**Maximum Height**		
				For Shade Widths to 78"	144"	144"	144"	108"	144"	144"	144"	144"	144"	NA	NA	NA
				For Shade Widths to 84"	144"	144"	144"	102"	144"	144"	144"	144"	144"	144"	144"	144"
				For Shade Widths to 90"	144"	144"	144"	72"	144"	144"	144"	144"	144"	144"	144"	144"
				For Shade Widths to 96"	144"	144"	144"	48"	144"	144"	144"	144"	144"	144"	144"	144"
				For Shade Widths to 106"	144"	108"	108"	NA	108"	108"	144"	144"	144"	144"	144"	144"
				For Shade Widths over 106"	144"	N/A	N/A	NA	60"	96"	144"	144"	144"	144"	144"	144"
Sheerweave 7700R	**118"**	NO	NO	**Non-Railroaded**												
				Maximum Width	**118"**	**108"**	**108"**	**84"**	**108"**	**108"**	**118"**	**118"**	**118"**	**118"**	**118"**	**118"**
					Maximum Height									**Maximum Height**		
				For Shade Widths to 66"	144"	144"	144"	48"	114"	144"	132"	144"	144"	NA	NA	NA
				For Shade Widths to 72"	144"	144"	144"	48"	96"	144"	132"	144"	144"	NA	NA	NA
				For Shade Widths to 84"	144"	126"	126"	42"	96"	126"	126"	144"	144"	144"	144"	102"
				For Shade Widths to 90"	144"	102"	102"	NA	96"	102"	96"	144"	144"	144"	144"	102"
				For Shade Widths to 96"	144"	102"	102"	NA	78"	102"	78"	144"	144"	144"	144"	102"
				For Shade Widths to 102"	144"	60"	60"	NA	60"	60"	78"	144"	144"	144"	144"	102"
				For Shade Widths over 102"	144"	48"	48"	NA	48"	48"	78"	144"	114"	144"	144"	102"
Sheerweave 7750R	**118"**	NO	NO	**Non-Railroaded**												
				Maximum Width	**98"**	**98"**	**98"**	**90"**	**98"**	**98"**	**98"**	**98"**	**98"**	**98"**	**98"**	**98"**
					Maximum Height									**Maximum Height**		
				For Shade Widths to 66"	120"	120"	120"	72"	120"	120"	120"	120"	120"	N/A	NA	NA
				For Shade Widths to 72"	120"	120"	120"	72"	120"	120"	120"	120"	120"	NA	NA	NA
				For Shade Widths to 78"	120"	120"	120"	72"	120"	120"	120"	120"	120"	NA	NA	NA
				For Shade Widths to 84"	120"	120"	120"	60"	120"	120"	120"	120"	120"	120"	120"	120"
				For Shade Widths to 90"	120"	120"	120"	42"	120"	120"	120"	120"	120"	120"	120"	120"
				For Shade Widths over 90"	120"	120"	120"	NA	84"	120"	114"	120"	120"	120"	120"	120"
Sorrento	**108"**	**NO**	**NO**	**Non-Railroaded**												
				Maximum Width	**108"**	**100"**	**100"**	**96"**	**108"**	**108"**	**108"**	**108"**	**108"**	**108"**	**108"**	**108"**
					Maximum Height									**Maximum Height**		
				For Shade Widths to 90 "	144"	144"	144"	54"	108"	144"	144"	144"	144"	144"	144"	114"
				For Shade Widths to 96 "	144"	144"	144"	48"	108"	144"	144"	144"	144"	144"	144"	114"
				For Shade Widths over 96"	144"	108"	108"	NA	108"	108"	90"	144"	144"	144"	144"	114"
Sunscreen (SW) 7000	**118"**	**YES**	**YES**	**Non-Railroaded**												
				Maximum Width	**118"****	**108"****	**108"****	**84"**	**108"****	**108"****	**108"****	**118"****	**118"****	**118"****	**118"****	**118"****
				**R Series clutch - max width - 96"					**Maximum Height**						**Maximum Height**	
				For Shade Widths to 66"	144"	144"	144"	48"	114"	144"	132	144"	144"	NA	NA	NA
				For Shade Widths to 72"	144"	144"	144"	48"	96"	144"	132	144"	144"	NA	NA	NA
				For Shade Widths to 84"	144"	126"	126"	42"	96"	126"	126"	144"	144"	144"	144"	102"
				For Shade Widths to 90"	144"	96"	96"	NA	96"	96"	96"	144"	144"	144"	144"	102"
				For Shade Widths to 96"	144"	96"	96"	NA	78"	96"	78"	144"	144"	144"	144"	102"
				For Shade Widths to 102"	144"	60"	60"	NA	60"	60"	60"	144"	144"	144"	144"	102"
				For Shade Widths over 102"	144"	48"	48"	NA	48"	48"	48"	144"	144"	144"	144"	102"
				Railroaded												
				Maximum Width	**144"****	**108"****	**108"****	**84"**	**108"****	**108"****	**108"****	**144"****	**144"****	**144"****	**144"****	**144"****
				**R Series clutch - max width - 96"					**Maximum Height**						**Maximum Height**	
				For Shade Widths to 66"	144"	144"	144"	48"	114"	144"	132	144"	144"	NA	NA	NA
				For Shade Widths to 72"	144"	144"	144"	48"	96"	144"	132	144"	144"	NA	NA	NA
				For Shade Widths to 84"	144"	126"	126"	42"	96"	126"	126"	144"	144"	144"	144"	102"
				For Shade Widths to 90"	144"	96"	96"	NA	96"	96"	96"	144"	144"	144"	144"	102"
				For Shade Widths to 96"	144"	96"	96"	NA	78"	96"	78"	144"	144"	144"	144"	102"
				For Shade Widths to 102"	144"	60"	60"	NA	60"	60"	60"	144"	144"	144"	144"	102"
				For Shade Widths to 108"	144"	48"	48"	NA	48"	48"	48"	144"	144"	144"	144"	102"
				For Shade Widths to 118"	144"	NA	NA	NA	NA	NA	NA	144"	114"	144"	144"	102"
				For Shade Widths over 118"	144	NA	NA	NA	NA	NA	NA	144"	102"	144"	144"	102"

PRODUCT SIZE SPECIFICATIONS – CLUTCH LIFT

Minimum and Maximum Standards
For shades 12" wide, maximum length is 60"
All Patterns – Minimum Width: 12" Minimum Height: 12".
Spring Assist strongly recommended on shade sizes over 80" x 80".
For TouchLift Cordless specifications, please refer to Product Specifications – Touch Lift section.

Please Note: Shade sizes that are wider than the fabric roll width indicated will be made with the fabric turned width for length (railroaded). The maximum width for non-railroaded shades is the roll width unless otherwise noted.

Fabrics turned width for length will have a visible seam when fabricated longer than their maximum roll width less 10".
Fabrics turned width for length may have an edge curl. This is not considered a defect in the product.

Material Name	Roll Width	Railroad Option	Splice/ Seam		Standard Clutch	Fabric Valance	Deluxe Valance	Small Cassette	Medium Cassette	Large Cassette	3" Fascia	4" Fascia	Pocket Headrail	Spring Assist Clutch Standard Shade	Spring Assist Clutch 4" Fascia	Spring Assist Clutch Pocket
Tundra	94"	NO	NO	Non-Railroaded												
				Maximum Width	94"	84"	84"	94"	94"	94"	94"	94"	94"	94"	94"	94"
					Maximum Height									Maximum Height		
				For Shade Widths to 78"	144"	144"	144"	108"	144"	144"	144"	144"	144"	NA	NA	NA
				For Shade Widths to 84"	144"	144"	144"	102"	144"	144"	144"	144"	144"	144"	144"	144"
				For Shade Widths over 84"	144"	NA	NA	48"	144"	144"	144"	144"	144"	144"	144"	144"
Tundra Blackout	94"	NO	NO	Non-Railroaded												
				Maximum Width	94"	84"	84"	90"	94"	94"	94"	94"	94"	94"	94"	94"
					Maximum Height									Maximum Height		
				For Shade Widths to 66"	120"	120"	120"	78"	120"	120"	120"	120"	120"	N/A	NA	NA
				For Shade Widths to 72"	120"	120"	120"	78"	120"	120"	120"	120"	120"	NA	NA	NA
				For Shade Widths to 78"	120"	120"	120"	78"	120"	120"	120"	120"	120"	NA	NA	NA
				For Shade Widths to 84"	120"	120"	120"	60"	120"	120"	120"	120"	120"	120"	120"	120"
				For Shade Widths to 90"	120"	NA	NA	42"	120"	120"	120"	120"	120"	120"	120"	120"
				For Shade Widths over 90"	120"	NA	NA	NA	108"	120"	120"	120"	120"	120"	120"	120"
Uptown (R79_02)	78"	YES	NO	Non-Railroaded												
				Maximum Width	78"	66"	66"	78"	78"	78"	78"	78"	78"	NA	NA	NA
					Maximum Height									Maximum Height		
				For Shade Widths to 66"	144"	144"	144"	126"	144"	144"	144"	144"	144"	NA	NA	NA
				For Shade Widths over 66"	144"	NA	NA	126"	144"	144"	144"	144"	144"	NA	NA	NA
				Railroaded												
				Maximum Width	144"**	126"	126"	120"	126"	126"	126"	144"**	144"**	NA	NA	NA
				**R Series clutch - max width - 126"	Maximum Height									Maximum Height		
				For Shade Widths to 96"	68"	68"	68"	66"	68"	68"	68"	68"	68"	NA	NA	NA
				For Shade Widths over 96"	66"	66"	66"	66"	66"	66"	66"	66"	66"	NA	NA	NA
Uptown Room Darkening (R79_01)	78"	YES	NO	Non-Railroaded												
				Maximum Width	78"	66"	66"	78"	78"	78"	78"	78"	78"	NA	NA	NA
					Maximum Height									Maximum Height		
				For Shade Widths to 66"	144"	144"	144"	96"	144"	144"	144"	144"	144"	NA	NA	NA
				For Shade Widths to 72"	144"	NA	NA	96"	144"	144"	144"	144"	144"	NA	NA	NA
				For Shade Widths over 72"	144"	NA	NA	84"	144"	144"	144"	144"	144"	NA	NA	NA
				Railroaded												
				Maximum Width	144"***	120"	120"	114"	120"	120"	120"	144"**	144"**	144"**	144"**	144"**
				**R Series clutch - max width - 120"	Maximum Height									Maximum Height		
				For Shade Widths to 72"	68"	68"	68"	68"	68"	68"	68"	68"	68"	NA	NA	NA
				For Shade Widths to 84"	68"	68"	68"	60"	68"	68"	68"	68"	68"	NA	NA	NA
				For Shade Widths to 96"	68"	68"	68"	48"	68"	68"	68"	68"	68"	NA	NA	NA
				For Shade Widths over 96"	66"	66"	66"	48"	66"	66"	66"	66"	66"	NA	NA	NA
World Textures 1	78"	YES	YES	Non-Railroaded												
				Maximum Width	78"	66"	66"	78"	78"	78"	78"	78"	78"	NA	NA	NA
					Maximum Height									Maximum Height		
				For Shade Widths to 66"	144"	144"	144"	66"	144"	144"	144"	144"	144"	NA	NA	NA
				For Shade Widths over 66"	144"	NA	NA	66"	126"	144"	144"	144"	144"	NA	NA	NA
				Railroaded												
				Maximum Width	144"***	120"	120"	90"	120"	120"	120"	144"**	144"**	144"**	144"**	144"**
				**R Series clutch - max width - 120"	Maximum Height									Maximum Height		
				For Shade Widths to 66"	144"	144"	144"	66"	144"	144"	144"	144"	144"	NA	NA	NA
				For Shade Widths to 78"	144"	144"	144"	66"	126"	144"	144"	144"	144"	NA	NA	NA
				For Shade Widths over 78"	144"	132"	132"	42"	60"	132"	108"	144"	132"	144"	144"	132"
World Textures 1 Blackout	78"	YES	YES	Non-Railroaded												
				Maximum Width	78"	66"	66"	78"	78"	78"	78"	78"	78"	NA	NA	NA
					Maximum Height									Maximum Height		
				For Shade Widths to 66"	144"	144"	144"	60"	144"	144"	144"	144"	144"	NA	NA	NA
				For Shade Widths over 66"	144"	NA	NA	60"	114"	144"	144"	144"	144"	NA	NA	NA
				Railroaded												
				Maximum Width	144"***	120"	120"	90"	120"	120"	120	144"**	144"**	144"**	144"**	144"**
				**R Series clutch - max width - 120"	Maximum Height									Maximum Height		
				For Shade Widths to 66"	144"	144"	144"	60"	144"	144"	144"	144"	144"	NA	NA	NA
				For Shade Widths to 78"	144"	144"	144"	60"	114"	144"	144"	144"	144"	NA	NA	NA
				For Shade Widths over 78"	144"	120"	120"	42"	54"	120"	96"	144"	120"	144"	144"	120"

PRODUCT SIZE SPECIFICATIONS – CLUTCH LIFT

Minimum and Maximum Standards
For shades 12" wide, maximum length is 60"
All Patterns – Minimum Width: 12" Minimum Height: 12".
Spring Assist strongly recommended on shade sizes over 80" x 80".
For TouchLift Cordless specifications, please refer to Product Specifications – Touch Lift section.

Please Note: Shade sizes that are wider than the fabric roll width indicated will be made with the fabric turned width for length (railroaded). The maximum width for non-railroaded shades is the roll width unless otherwise noted.

Fabrics turned width for length will have a visible seam when fabricated longer than their maximum roll width less 10".
Fabrics turned width for length may have an edge curl. This is not considered a defect in the product.

Material Name	Roll Width	Railroad Option	Splice/ Seam		Standard Clutch	Fabric Valance	Deluxe Valance	Small Cassette	Medium Cassette	Large Cassette	3" Fascia	4" Fascia	Pocket Headrail	Spring Assist Clutch		
														Standard Shade	4" Fascia	Pocket
World Textures 2	80"	YES	YES	Non-Railroaded												
				Maximum Width	80"	70"	70	80"	80"	80"	80"	80"	80"	80"	80"	80"
					Maximum Height									Maximum Height		
				For Shade Widths to 70"	144"	132"	132"	42"	108"	132"	120"	144"	144"	NA	NA	NA
				For Shade Widths to 72"	144"	NA	NA	42"	108"	132"	120"	144"	144"	NA	NA	NA
				For Shade Widths to 78"	144"	NA	NA	42"	84"	132"	120"	144"	144"	NA	NA	NA
				For Shade Widths over 78"	144"	NA	NA	42"	84"	132"	120"	144"	144"	144"	144"	90"
				Railroaded												
				Maximum Width	144"**	120"	120"	90"	114"	120"	120"	144"**	144"**	144"**	144"**	144"**
				**R Series clutch - max width - 120"	Maximum Height									Maximum Height		
				For Shade Widths to 72"	144"	132"	132"	42"	108"	132"	120"	144"	144"	NA	NA	NA
				For Shade Widths to 78"	144"	132"	132"	42"	84"	132"	120"	144"	144"	NA	NA	NA
				For Shade Widths to 80"	144"	132"	132"	42"	84"	132"	120"	144"	144"	144"	144"	90"
				For Shade Widths over 80"	144	84"	84"	42"	48"	84"	72"	144"	90"	144"	144"	90"
World Textures 2 Blackout	80"	YES	YES	Non-Railroaded												
				Maximum Width	80"	70"	70"	80"	80"	80"	80"	80"	80"	80"	80"	80"
					Maximum Height									Maximum Height		
				For Shade Widths to 70"	144"	144"	144"	60"	114"	144"	144"	144"	144"	NA	NA	NA
				For Shade Widths to 78"	144"	NA	NA	60"	114"	144"	144"	144"	144"	NA	NA	NA
				For Shade Widths over 78"	144"	NA	NA	60"	114"	144"	144"	144"	144"	144"	144"	120"
				Railroaded												
				Maximum Width	144"**	120"	120"	90"	120"	120"	120	144"**	144"**	144"**	144"**	144"**
				**R Series clutch - max width - 120"	Maximum Height									Maximum Height		
				For Shade Widths to 78"	144"	144"	144"	60"	114"	144"	144"	144"	144"	NA	NA	NA
				For Shade Widths to 80"	144"	144"	144"	60"	114"	144"	144"	144"	144"	144"	144"	120"
				For Shade Widths over 80"	144"	120"	120"	42"	54"	120"	96"	144"	120"	144"	144"	120"

PRODUCT SIZE SPECIFICATIONS – TOUCHLIFT

Minimum shade width – 18" Minimum shade height – 24" Fabric Wrapped Bottomrail Shades over 42" will have 2 handles				No Top Treatment				Deluxe Valance				Fabric Valance			
				Non-Railroaded		Railroaded		Non-Railroaded		Railroaded		Non-Railroaded		Railroaded	
Material Name	Roll Width	RailRoad Option	Splice/ Seam	MAX WIDTH	MAX HEIGHT	MAX WIDTH	MAX HEIGHT	MAX WIDTH	MAX HEIGHT	MAX WIDTH	MAX HEIGHT	MAX WIDTH	MAX HEIGHT	MAX WIDTH	MAX HEIGHT
1% E Screen	122"	YES	YES	84"	84"	84"	84"	84"	84"	84"	84"	84"	84"	84"	84"
1% Sheerweave 2500	126"	YES	YES	84"	84"	84"	84"	84"	84"	84"	84"	84"	84"	84"	84"
1% Sheerweave 2701	126"	YES	YES	84"	84"	84"	84"	84"	84"	84"	84"	84"	84"	84"	84"
1% Sheerweave 4901	98"	NO	NO	84"	84"	N/A	N/A	84"	84"	N/A	N/A	84"	84"	N/A	N/A
1% Sheerweave 5000	98"	NO	NO	84"	84"	N/A	N/A	84"	84"	N/A	N/A	84"	84"	N/A	N/A
1% Toka	118"	YES	YES	84"	84"	84"	84"	84"	84"	84"	84"	84"	84"	84"	84"
3% E Screen	122"	YES	YES	84"	84"	84"	84"	84"	84"	84"	84"	84"	84"	84"	84"
3% M Screen	122"	YES	YES	84"	84"	84"	84"	84"	84"	84"	84"	84"	84"	84"	84"
3% Sheerweave 2410	126"	YES	YES	84"	84"	84"	84"	84"	84"	84"	84"	84"	84"	84"	84"
3% Sheerweave 2703	126"	YES	YES	84"	84"	84"	84"	84"	84"	84"	84"	84"	84"	84"	84"
3% Sheerweave 4400	126"	YES	YES	84"	84"	84"	84"	84"	84"	84"	84"	84"	84"	84"	84"
3% Sheerweave 4600	126"	YES	YES	84"	84"	84"	84"	84"	84"	84"	84"	84"	84"	84"	84"
3% Sheerweave 4903	98"	NO	NO	84"	84"	N/A	N/A	84"	84"	N/A	N/A	84"	84"	N/A	N/A
3% Sheerweave 5000 *(R07_02, 04, 05, 07, 10)*	98"	NO	NO	84"	84"	N/A	N/A	84"	84"	N/A	N/A	84"	84"	N/A	N/A
3% Sheerweave 5000 *(R07_R11, R89, R90, R93, U10, U11)*	98"	NO	NO	84"	84"	N/A	N/A	84"	84"	N/A	N/A	84"	84"	N/A	N/A
3% T Screen	98"	YES	NO	84"	84"	84"	84"	84"	84"	84"	84"	84"	84"	84"	84"
4% S Screen	122"	NO	NO	84"	84"	N/A	N/A	84"	84"	N/A	N/A	84"	84"	N/A	N/A
4% Silver Screen	94"	YES	YES	84"	84"	84"	84"	84"	84"	84"	84"	84"	84"	84"	84"
5% E Screen	122"	YES	YES	84"	84"	84"	84"	84"	84"	84"	84"	84"	84"	84"	84"
5% M Screen Deco	98"	YES	YES	84"	84"	84"	84"	84"	84"	84"	84"	84"	84"	84"	84"
5% Sheerweave 2000	126"	YES	YES	84"	84"	84"	84"	84"	84"	84"	84"	84"	84"	84"	84"
5% Sheerweave 2390	126"	YES	YES	84"	84"	84"	84"	84"	84"	84"	84"	84"	84"	84"	84"
5% Sheerweave 2705	126"	NO	NO	84"	84"	N/A	N/A	84"	84"	N/A	N/A	84"	84"	N/A	N/A
5% Sheerweave 4000	126"	YES	YES	84"	84"	84"	84"	84"	84"	84"	84"	84"	84"	84"	84"
5% Sheerweave 4500	126"	YES	YES	84"	84"	84"	84"	84"	84"	84"	84"	84"	84"	84"	84"
5% Sheerweave 5000 *(R10_01, 03, 06, 07, 09, 10, 11, 12, 13,14, 15, 16, 17, 18, 19, 20, 21)*	98"	NO	NO	84"	84"	N/A	N/A	84"	84"	N/A	N/A	84"	84"	N/A	N/A
5% Sheerweave 5000 (R10_Q51, S77, S84)	98"	NO	NO	84"	84"	N/A	N/A	84"	84"	N/A	N/A	84"	84"	N/A	N/A
5% Sheerweave 5000 *(R10_Q43, S82)*	98"	NO	NO	84"	84"	N/A	N/A	84"	84"	N/A	N/A	84"	84"	N/A	N/A
7% Global Screen	118"	YES	YES	84"	84"	84"	84"	84"	84"	84"	84"	84"	84"	84"	84"
7% Sheerweave 5000 *(R34_Q46)*	98"	NO	NO	84"	84"	N/A	N/A	84"	84"	N/A	N/A	84"	84"	N/A	N/A
7% Sheerweave 5000 *(R34_08, 09)*	98"	NO	NO	84"	84"	N/A	N/A	84"	84"	N/A	N/A	84"	84"	N/A	N/A
7% Sheerweave 5000 *(R34_S73)*	98"	NO	NO	84"	84"	N/A	N/A	84"	84"	N/A	N/A	84"	84"	N/A	N/A
10% E Screen	122"	YES	YES	84"	84"	84"	84"	84"	84"	84"	84"	84"	84"	84"	84"
10% Sheerweave 2360	126"	NO	NO	84"	84"	N/A	N/A	84"	84"	N/A	N/A	84"	84"	N/A	N/A
10% Sheerweave 4100	98"	YES	YES	84"	84"	84"	84"	84"	84"	84"	84"	84"	84"	84"	84"
10% Sheerweave 5000 *(R26_03)*	98"	NO	NO	84"	84"	N/A	N/A	84"	84"	N/A	N/A	84"	84"	N/A	N/A
10% Sheerweave 5000 *(R26_U16, U24, U28, U29)*	98"	NO	NO	84"	84"	N/A	N/A	84"	84"	N/A	N/A	84"	84"	N/A	N/A
Alexandria	78"	NO	NO	78"	84"	N/A	N/A	68"	84"	N/A	N/A	68"	84"	N/A	N/A
Astaire	94"	NO	NO	84"	84"	N/A	N/A	N/A	N/A	N/A	N/A	N/A	N/A	N/A	N/A
Avila R Blackout	118"	YES	YES	84"	84"	84"	84"	84"	84"	84"	84"	84"	84"	84"	84"
Baroque	78"	NO	NO	78"	84"	N/A	N/A	68"	84"	N/A	N/A	68"	84"	N/A	N/A
Blackout - Solid	72"	YES	YES	72"	84"	84"	84"	62"	84"	84"	84"	N/A	N/A	N/A	N/A
Brilliance	118"	NO	NO	84"	84"	N/A	N/A	84"	84"	N/A	N/A	84"	84"	N/A	N/A
Brilliance Blackout	118"	NO	NO	84"	84"	N/A	N/A	84"	84"	N/A	N/A	84"	84"	N/A	N/A
Carrara	110"	NO	NO	84"	84"	N/A	N/A	84"	84"	N/A	N/A	84"	84"	N/A	N/A
Carrara Blackout	110"	NO	NO	84"	84"	N/A	N/A	84"	84"	N/A	N/A	84"	84"	N/A	N/A
Claudio	110"	NO	NO	84"	84"	N/A	N/A	84"	84"	N/A	N/A	84"	84"	N/A	N/A
Claudio Blackout	110"	NO	NO	84"	84"	N/A	N/A	84"	84"	N/A	N/A	84"	84"	N/A	N/A
Cusco	110"	YES	YES	84"	84"	84"	84"	84"	84"	84"	84"	84"	84"	84"	84"
Darien	90"	NO	NO	84"	84"	N/A	N/A	80"	84"	N/A	N/A	80"	84"	N/A	N/A
Drizzle	94"	YES	YES	78"	84"	84"	84"	68"	84"	84"	84"	68"	84"	84"	84"
Fiona	78"	NO	NO	78"	84"	N/A	N/A	68"	84"	N/A	N/A	68"	84"	N/A	N/A
Flocke Blackout	94"	YES	YES	84"	84"	84"	84"	84"	84"	84"	84"	84"	84"	84"	84"
Hayworth	98"	YES	YES	84"	84"	84"	84"	84"	84"	84"	84	84"	84"	84"	84
Illusion	72"	YES	NO	72"	84"	84"	60"	62"	84"	84"	60"	62"	84"	84"	60"
Jasper	110"	YES	YES	84"	84"	84"	84"	84"	84"	84"	84"	84"	84"	84"	84"
Linview	122"	YES	YES	84"	84"	84"	84"	84"	84"	84"	84"	84"	84"	84"	84"
Linview Blackout	94"	NO	NO	84"	84"	N/A	N/A	84"	84"	N/A	N/A	84"	84"	N/A	N/A
Montero	94"	NO	NO	84"	84"	N/A	N/A	84"	84"	N/A	N/A	84"	84"	N/A	N/A
Moravia	96"	NO	NO	84"	84"	N/A	N/A	84"	84"	N/A	N/A	84"	84"	N/A	N/A
Santa Cruz	94"	NO	NO	84"	84"	N/A	N/A	84"	84"	N/A	N/A	84"	84"	N/A	N/A
Santa Cruz Blackout	94"	NO	NO	84"	84"	N/A	N/A	84"	84"	N/A	N/A	84"	84"	N/A	N/A
Scala Blackout	110"	YES	YES	84"	84"	84"	84"	84"	84"	84"	84"	N/A	N/A	N/A	N/A
Sheerweave 7200R	118"	NO	NO	84"	84"	N/A	N/A	84"	84"	N/A	N/A	84"	84"	N/A	N/A
Sheerweave 7250R	118"	NO	NO	84"	84"	N/A	N/A	84"	84"	N/A	N/A	84"	84"	N/A	N/A
Sheerweave 7400	118"	NO	NO	84"	84"	N/A	N/A	84"	84"	N/A	N/A	84"	84"	N/A	N/A
Sheerweave 7450	118"	NO	NO	84"	84"	N/A	N/A	84"	84"	N/A	N/A	84"	84"	N/A	N/A
Sheerweave 7500	118"	NO	NO	84"	84"	N/A	N/A	84"	84"	N/A	N/A	N/A	N/A	N/A	N/A
Sheerweave 7500R	118"	NO	NO	84"	84"	N/A	N/A	84"	84"	N/A	N/A	N/A	N/A	N/A	N/A
Sheerweave 7600	118"	NO	NO	84"	84"	N/A	N/A	84"	84"	N/A	N/A	84"	84"	N/A	N/A
Sheerweave 7650	118"	NO	NO	84"	84"	N/A	N/A	84"	84"	N/A	N/A	84"	84"	N/A	N/A
Sheerweave 7700R	118"	NO	NO	84"	84"	N/A	N/A	84"	84"	N/A	N/A	84"	84"	N/A	N/A
Sheerweave 7750R	118"	NO	NO	84"	84"	N/A	N/A	84"	84"	N/A	N/A	84"	84"	N/A	N/A
Sorrento	108"	NO	NO	84"	84"	N/A	N/A	84"	84"	N/A	N/A	84"	84"	N/A	N/A
Sunscreen (SW) 7000	118"	YES	YES	84"	84"	84"	84"	84"	84"	84"	84"	84"	84"	84"	84"
Tundra	94"	NO	NO	84"	84"	N/A	N/A	84"	84"	N/A	N/A	84"	84"	N/A	N/A
Tundra Blackout	94"	NO	NO	84"	84"	N/A	N/A	84"	84"	N/A	N/A	84"	84"	N/A	N/A
Uptown	78"	YES	NO	78"	84"	84"	66"	68"	84"	84"	66"	68"	84"	84"	66"
Uptown Room Darkening	78"	YES	NO	78"	84	84"	66"	68"	84"	84"	66"	68"	84"	84"	66"
World Textures 1	78"	YES	YES	78"	84"	84"	84"	68"	84"	84"	84"	68"	84"	84"	84"
World Textures 1 Blackout	78"	YES	YES	78"	84"	84"	84"	68"	84"	84"	84"	68"	84"	84"	84"
World Textures 2	80"	YES	YES	80"	84"	84"	84"	70"	84"	84"	84"	70"	84"	84"	84"
World Textures 2 Blackout	80"	YES	YES	80"	84"	84"	84"	70"	84"	84"	84"	70"	84"	84"	84"

PRODUCT SIZE SPECIFICATIONS – TOUCHLIFT

Minimum shade width – 18" Minimum shade height – 24" Fabric Wrapped Bottomrail Shades over 42" will have 2 handles				Medium Cassette				Large Cassette			
				Non-Railroaded		Railroaded		Non-Railroaded		Railroaded	
Material Name	Roll Width	RailRoad Option	Splice/ Seam	MAX WIDTH	MAX HEIGHT	MAX WIDTH	MAX HEIGHT	MAX WIDTH	MAX HEIGHT	MAX WIDTH	MAX HEIGHT
1% E Screen	122"	YES	YES	84"	84"	84"	84"	84"	84"	84"	84"
1% Sheerweave 2500	126"	YES	YES	84"	84"	84"	84"	84"	84"	84"	84"
1% Sheerweave 2701	126"	YES	YES	84"	84"	84"	84"	84"	84"	84"	84"
1% Sheerweave 4901	98"	NO	NO	84"	84"	N/A	N/A	84"	84"	N/A	N/A
1% Sheerweave 5000	98"	NO	NO	84"	54"	N/A	N/A	84"	84"	N/A	N/A
1% Toka	118"	YES	YES	84"	84"	84"	84"	84"	84"	84"	84"
3% E Screen	122"	YES	YES	84"	84"	84"	84"	84"	84"	84"	84"
3% M Screen	122"	YES	YES	84"	84"	84"	84"	84"	84"	84"	84"
3% Sheerweave 2410	126"	YES	YES	84"	84"	84"	84"	84"	84"	84"	84"
3% Sheerweave 2703	126"	YES	YES	84"	84"	84"	84"	84"	84"	84"	84"
3% Sheerweave 4400	126"	YES	YES	84"	81"	84"	84"	84"	84"	84"	84"
3% Sheerweave 4600	126"	YES	YES	84"	84"	84"	84"	84"	84"	84"	84"
3% Sheerweave 4903	98"	NO	NO	84"	84"	N/A	N/A	84"	84"	N/A	N/A
3% Sheerweave 5000 *(R07_02, 04, 05, 07, 10)*	98"	NO	NO	84"	47"	N/A	N/A	84"	84"	N/A	N/A
3% Sheerweave 5000 *(R07_R11, R89, R90, R93, U10, U11)*	98"	NO	NO	84"	48"	N/A	N/A	84"	84"	N/A	N/A
3% T Screen	98"	YES	NO	84"	84"	84"	84"	84"	84"	84"	84"
4% S Screen	122"	NO	NO	84"	63"	N/A	N/A	84"	84"	N/A	N/A
4% Silver Screen	94"	YES	YES	84"	84"	84"	84"	84"	84"	84"	84"
5% E Screen	122"	YES	YES	84"	84"	84"	84"	84"	84"	84"	84"
5% M Screen Deco	98"	YES	YES	84"	84"	84"	84"	84"	84"	84"	84"
5% Sheerweave 2000	126"	YES	YES	84"	84"	84"	84"	84"	84"	84"	84"
5% Sheerweave 2390	126"	YES	YES	84"	84"	84"	84"	84"	84"	84"	84"
5% Sheerweave 2705	126"	NO	NO	84"	84"	N/A	N/A	84"	84"	N/A	N/A
5% Sheerweave 4000	126"	YES	YES	84"	84"	84"	84"	84"	84"	84"	84"
5% Sheerweave 4500	126"	YES	YES	84"	84"	84"	84"	84"	84"	84"	84"
5% Sheerweave 5000 *(R10_01, 03, 06, 07, 09, 10, 11, 12, 13,14, 15, 16, 17, 18, 19, 20, 21)*	98"	NO	NO	84"	58"	N/A	N/A	84"	84"	N/A	N/A
5% Sheerweave 5000 (R10_Q51, S77, S84)	98"	NO	NO	84"	54"	N/A	N/A	84"	84"	N/A	N/A
5% Sheerweave 5000 *(R10_Q43, S82)*	98"	NO	NO	84"	66"	N/A	N/A	84"	84"	N/A	N/A
7% Global Screen	118"	YES	YES	84"	84"	84"	84"	84"	84"	84"	84"
7% Sheerweave 5000 *(R34_Q46)*	98"	NO	NO	84"	68"	N/A	N/A	84"	84"	N/A	N/A
7% Sheerweave 5000 *(R34_08, 09)*	98"	NO	NO	84"	78"	N/A	N/A	84"	84"	N/A	N/A
7% Sheerweave 5000 *(R34_S73)*	98"	NO	NO	84"	60"	N/A	N/A	84"	84"	N/A	N/A
10% E Screen	122"	YES	YES	84"	84"	84"	84"	84"	84"	84"	84"
10% Sheerweave 2360	126"	NO	NO	84"	84"	N/A	N/A	84"	84"	N/A	N/A
10% Sheerweave 4100	98"	YES	YES	84"	78"	84"	78"	84"	84"	84"	84"
10% Sheerweave 5000 *(R26_03)*	98"	NO	NO	84"	58"	N/A	N/A	84"	84"	N/A	N/A
10% Sheerweave 5000 *(R26_U16, U24, U28, U29)*	98"	NO	NO	84"	66"	N/A	N/A	84"	84"	N/A	N/A
Alexandria	78"	NO	NO	78"	84"	N/A	N/A	78"	84"	N/A	N/A
Astaire	94"	NO	NO	84"	84"	N/A	N/A	84"	84"	N/A	N/A
Avila R Blackout	118"	YES	YES	84"	84"	84"	84"	84"	84"	84"	84"
Baroque	78"	NO	NO	78"	84"	N/A	N/A	78"	84"	N/A	N/A
Blackout - Solid	72"	YES	YES	72"	84"	84"	84"	72"	84"	84"	84"
Brilliance	118"	NO	NO	84"	84"	N/A	N/A	84"	84"	N/A	N/A
Brilliance Blackout	118"	NO	NO	84"	84"	N/A	N/A	84"	84"	N/A	N/A
Carrara	110"	NO	NO	84"	84"	N/A	N/A	84"	84"	N/A	N/A
Carrara Blackout	110"	NO	NO	84"	84"	N/A	N/A	84"	84"	N/A	N/A
Claudio	110"	NO	NO	84"	84"	N/A	N/A	84"	84"	N/A	N/A
Claudio Blackout	110"	NO	NO	84"	84"	N/A	N/A	84"	84"	N/A	N/A
Cusco	110"	YES	YES	84"	84"	84"	84"	84"	84"	84"	84"
Darien	90"	NO	NO	84"	84"	N/A	N/A	84"	84"	N/A	N/A
Drizzle	78"	YES	YES	78"	84"	84"	84"	78"	84"	84"	84"
Fiona	78"	NO	NO	78"	84"	N/A	N/A	78"	84"	N/A	N/A
Flocke Blackout	94"	YES	YES	84"	84"	84"	84"	84"	84"	84"	84"
Hayworth	98"	YES	YES	84"	84"	84"	84"	84"	84"	84"	84
Illusion	72"	YES	NO	72"	84"	84"	60"	72"	84"	84"	60"
Jasper	110"	YES	YES	84"	84"	84"	84"	84"	84"	84"	84"
Linview	122"	YES	YES	84"	84"	84"	84"	84"	84"	84"	84"
Linview Blackout	94"	NO	NO	84"	84"	N/A	N/A	84"	84"	N/A	N/A
Montero	94"	NO	NO	84"	84"	N/A	N/A	84"	84"	N/A	N/A
Moravia	96"	NO	NO	84"	84"	N/A	N/A	84"	84"	N/A	N/A
Santa Cruz	94"	NO	NO	84"	84"	N/A	N/A	84"	84"	N/A	N/A
Santa Cruz Blackout	94"	NO	NO	84"	84"	N/A	N/A	84"	84"	N/A	N/A
Scala Blackout	110"	YES	YES	84"	84"	84"	84"	84"	84"	84"	84"
Sheerweave 7200R	118"	NO	NO	84"	84"	N/A	N/A	84"	84"	N/A	N/A
Sheerweave 7250R	118"	NO	NO	84"	84"	N/A	N/A	84"	84"	N/A	N/A
Sheerweave 7400	118"	NO	NO	84"	84"	N/A	N/A	84"	84"	N/A	N/A
Sheerweave 7450	118"	NO	NO	84"	84"	N/A	N/A	84"	84"	N/A	N/A
Sheerweave 7500	118"	NO	NO	84"	84"	N/A	N/A	84"	84"	N/A	N/A
Sheerweave 7500R	118"	NO	NO	84"	84"	N/A	N/A	84"	84"	N/A	N/A
Sheerweave 7600	118"	NO	NO	84"	84"	N/A	N/A	84"	84"	N/A	N/A
Sheerweave 7650	118"	NO	NO	84"	84"	N/A	N/A	84"	84"	N/A	N/A
Sheerweave 7700R	118"	NO	NO	84"	84"	N/A	N/A	84"	84"	N/A	N/A
Sheerweave 7750R	118"	NO	NO	84"	84"	N/A	N/A	84"	84"	N/A	N/A
Sorrento	108"	NO	NO	84"	84"	N/A	N/A	84"	84"	N/A	N/A
Sunscreen (SW) 7000	118"	YES	YES	84"	84"	84"	84"	84"	84"	84"	84"
Tundra	94"	NO	NO	84"	84"	N/A	N/A	84"	84"	N/A	N/A
Tundra Blackout	94"	NO	NO	84"	84"	N/A	N/A	84"	84"	N/A	N/A
Uptown	78"	YES	NO	78"	84"	84"	66"	78"	84"	84"	66"
Uptown Room Darkening	78"	YES	NO	78"	84"	84"	66"	78"	84"	84"	66"
World Textures 1	78"	YES	YES	78"	84"	84"	66"	78"	84"	84"	84"
World Textures 1 Blackout	78"	YES	YES	78"	84"	84"	66"	78"	84"	84"	84"
World Textures 2	80"	YES	YES	80"	84"	84"	68"	80"	84"	84"	84"
World Textures 2 Blackout	80"	YES	YES	80"	84"	84"	68"	80"	84"	84"	84"

PRODUCT SIZE SPECIFICATIONS – POWERWAND™

Minimum and Maximum Standards
Please Note: Shade sizes that are wider than the fabric roll width indicated will be made with the fabric turned width for length (railroaded). The maximum width for non-railroaded shades is the roll width unless otherwise noted.

Minimum:	Width	Height
PowerWand	19"	12"

Fabrics turned width for length will have a visible seam when fabricated longer than their maximum roll width less 10". Fabrics turned width for length may have an edge curl. This is not considered a defect in the product.

Material Name	Roll Width	Railroad Option	Splice/ Seam		PowerWand™ Shade Without Top Treament	PowerWand™ Shade with Deluxe	PowerWand™ Shade with Fabric	PowerWand™ Shade with Medium	PowerWand™ Shade with Large
1% E Screen	122"	YES	YES	Non-Railroaded					
				Maximum Width	102"	102"	102"	102"	102"
					Maximum Height				
				For Shade Widths to 66"	144"	144"	144"	138"	144"
				For Shade Widths to 72"	138"	138"	138"	138"	138"
				For Shade Widths to 84"	120"	120"	120"	120"	120"
				For Shade Widths to 90"	108"	108"	108"	108"	108"
				For Shade Widths to 96"	102"	102"	102"	102"	102"
				For Shade Widths to 102"	84"	84"	84"	84"	84"
				Railroaded					
				Maximum Width	102"	102"	102"	102"	102"
					Maximum Height				
				For Shade Widths to 66"	144"	144"	144"	138"	144"
				For Shade Widths to 72"	138"	138"	138"	138"	138"
				For Shade Widths to 84"	120"	120"	120"	120"	120"
				For Shade Widths to 90"	108"	108"	108"	108"	108"
				For Shade Widths to 96"	102"	102"	102"	102"	102"
				For Shade Widths to 102"	84"	84"	84"	84"	84"
1% Sheerweave 2500	126"	YES	YES	Non-Railroaded					
				Maximum Width	96"	96"	96"	96"	96"
					Maximum Height				
				For Shade Widths to 60"	126"	126"	126"	114"	126"
				For Shade Widths to 72"	102"	102"	102"	102"	102"
				For Shade Widths to 78"	90"	90"	90"	90"	90"
				For Shade Widths to 84"	84"	84"	84"	84"	84"
				For Shade Widths to 90"	78"	78"	78"	78"	78"
				For Shade Widths to 96"	72"	72"	72"	72"	72"
				Railroaded					
				Maximum Width	96"	96"	96"	96"	96"
					Maximum Height				
				For Shade Widths to 60"	126"	126"	126"	114"	126"
				For Shade Widths to 72"	102"	102"	102"	102"	102"
				For Shade Widths to 78"	90"	90"	90"	90"	90"
				For Shade Widths to 84"	84"	84"	84"	84"	84"
				For Shade Widths to 90"	78"	78"	78"	78"	78"
				For Shade Widths to 96"	72"	72"	72"	72"	72"
1% Sheerweave 2701	126"	YES	YES	Non-Railroaded					
				Maximum Width	96"	96"	96"	96"	96"
					Maximum Height				
				For Shade Widths to 60"	126"	126"	126"	126"	126"
				For Shade Widths to 72"	102"	102"	102"	102"	102"
				For Shade Widths to 78"	90"	90"	90"	90"	90"
				For Shade Widths to 84"	84"	84"	84"	84"	84"
				For Shade Widths to 90"	78"	78"	78"	78"	78"
				For Shade Widths to 96"	72"	72"	72"	72"	72"
				Railroaded					
				Maximum Width	96"	96"	96"	96"	96"
					Maximum Height				
				For Shade Widths to 60"	126"	126"	126"	126"	126"
				For Shade Widths to 72"	102"	102"	102"	102"	102"
				For Shade Widths to 78"	90"	90"	90"	90"	90"
				For Shade Widths to 84"	84"	84"	84"	84"	84"
				For Shade Widths to 90"	78"	78"	78"	78"	78"
				For Shade Widths to 96"	72"	72"	72"	72"	72"

PRODUCT SIZE SPECIFICATIONS – POWERWAND™

Minimum and Maximum Standards
Please Note: Shade sizes that are wider than the fabric roll width indicated will be made with the fabric turned width for length (railroaded). The maximum width for non-railroaded shades is the roll width unless otherwise noted.

Minimum:	Width	Height
PowerWand	19"	12"

Fabrics turned width for length will have a visible seam when fabricated longer than their maximum roll width less 10". Fabrics turned width for length may have an edge curl. This is not considered a defect in the product.

Material Name	Roll Width	Railroad Option	Splice/ Seam		PowerWand™ Shade Without Top Treament	PowerWand™ Shade with Deluxe	PowerWand™ Shade with Fabric	PowerWand™ Shade with Medium	PowerWand™ Shade with Large
1% Sheerweave 4901	98"	NO	NO	Non-Railroaded					
				Maximum Width	96"	88"	88"	96"	96"
					Maximum Height				
				For Shade Widths to 54"	138"	138"	138"	96"	138"
				For Shade Widths to 60"	126"	126"	126"	96"	126"
				For Shade Widths to 66"	108"	108"	108"	96"	108"
				For Shade Widths to 72"	102"	102"	102"	96"	102"
				For Shade Widths to 78"	90"	90"	90"	90"	90"
				For Shade Widths to 84"	84"	84"	84"	84"	84"
				For Shade Widths to 88"	78"	78"	78"	78"	78"
				For Shade Widths to 90"	78"	N/A	N/A	78"	78"
				For Shade Widths to 96"	72"	N/A	N/A	72"	72"
1% Sheerweave 5000	98"	NO	NO	Non-Railroaded					
				Maximum Width	96"	90"	90"	96"	96"
					Maximum Height				
				For Shade Widths to 60"	126"	86"	86"	54"	86"
				For Shade Widths to 72"	102"	86"	86"	54"	86"
				For Shade Widths to 78"	90"	86"	86"	54"	86"
				For Shade Widths to 84"	84"	84"	84"	54"	84"
				For Shade Widths to 90"	78"	78"	78"	54"	78"
				For Shade Widths to 96"	72"	NA	NA	54"	72"
1% Toka	118"	YES	YES	Non-Railroaded					
				Maximum Width	96"	96"	96"	96"	96"
					Maximum Height				
				For Shade Widths to 60"	126"	126"	126"	96"	126"
				For Shade Widths to 72"	102"	102"	102"	96"	102"
				For Shade Widths to 78"	90"	90"	90"	90"	90"
				For Shade Widths to 84"	84"	84"	84"	84"	84"
				For Shade Widths to 90"	78"	78"	78"	78"	78"
				For Shade Widths to 96"	72"	72"	72"	72"	72"
				Railroaded					
				Maximum Width	96"	96"	96"	96"	96"
					Maximum Height				
				For Shade Widths to 60"	126"	126"	126"	96"	126"
				For Shade Widths to 72"	102"	102"	102"	96"	102"
				For Shade Widths to 78"	90"	90"	90"	90"	90"
				For Shade Widths to 84"	84"	84"	84"	84"	84"
				For Shade Widths to 90"	78"	78"	78"	78"	78"
				For Shade Widths to 96"	72"	72"	72"	72"	72"
3% E Screen	122"	YES	YES	Non-Railroaded					
				Maximum Width	102"	102"	102"	102"	102"
					Maximum Height				
				For Shade Widths to 66"	144"	144"	144"	144"	144"
				For Shade Widths to 72"	138"	138"	138"	138"	138"
				For Shade Widths to 84"	120"	120"	120"	120"	120"
				For Shade Widths to 90"	108"	108"	108"	108"	108"
				For Shade Widths to 96"	102"	102"	102"	102"	102"
				For Shade Widths to 102"	84"	84"	84"	84"	84"
				Railroaded					
				Maximum Width	102"	102"	102"	102"	102"
					Maximum Height				
				For Shade Widths to 66"	144"	144"	144"	144"	144"
				For Shade Widths to 72"	138"	138"	138"	138"	138"
				For Shade Widths to 84"	120"	120"	120"	120"	120"
				For Shade Widths to 90"	108"	108"	108"	108"	108"
				For Shade Widths to 96"	102"	102"	102"	102"	102"
				For Shade Widths to 102"	84"	84"	84"	84"	84"

PRODUCT SIZE SPECIFICATIONS – POWERWAND™

Minimum and Maximum Standards
Please Note: Shade sizes that are wider than the fabric roll width indicated will be made with the fabric turned width for length (railroaded). The maximum width for non-railroaded shades is the roll width unless otherwise noted.

Minimum:	Width	Height
PowerWand	19"	12"

Fabrics turned width for length will have a visible seam when fabricated longer than their maximum roll width less 10". Fabrics turned width for length may have an edge curl. This is not considered a defect in the product.

Material Name	Roll Width	Railroad Option	Splice/ Seam		PowerWand™ Shade Without Top Treament	PowerWand™ Shade with Deluxe	PowerWand™ Shade with Fabric	PowerWand™ Shade with Medium	PowerWand™ Shade with Large
3% M Screen	122"	YES	YES	Non-Railroaded					
				Maximum Width	102"	102"	102"	102"	102"
					Maximum Height				
				For Shade Widths to 66"	144"	144"	144"	144"	144"
				For Shade Widths to 72"	138"	138"	138"	138"	138"
				For Shade Widths to 84"	120"	120"	120"	120"	120"
				For Shade Widths to 90"	108"	108"	108"	108"	108"
				For Shade Widths to 96"	102"	102"	102"	102"	102"
				For Shade Widths to 102"	84"	84"	84"	84"	84"
				Railroaded					
				Maximum Width	102"	102"	102"	102"	102"
					Maximum Height				
				For Shade Widths to 66"	144"	144"	144"	144"	144"
				For Shade Widths to 72"	138"	138"	138"	138"	138"
				For Shade Widths to 84"	120"	120"	120"	120"	120"
				For Shade Widths to 90"	108"	108"	108"	108"	108"
				For Shade Widths to 96"	102"	102"	102"	102"	102"
				For Shade Widths to 102"	84"	84"	84"	84"	84"
3% Sheerweave 2410	126"	YES	YES	Non-Railroaded					
				Maximum Width	102"	102"	102"	102"	102"
					Maximum Height				
				For Shade Widths to 66"	108"	108"	108"	108"	108"
				For Shade Widths to 72"	102"	102"	102"	102"	102"
				For Shade Widths to 84"	84"	84"	84"	84"	84"
				For Shade Widths to 90"	78"	78"	78"	78"	78"
				For Shade Widths to 96"	72"	72"	72"	72"	72"
				For Shade Widths to 102"	60"	60"	60"	60"	60"
				Railroaded					
				Maximum Width	102"	102"	102"	102"	102"
					Maximum Height				
				For Shade Widths to 66"	108"	108"	108"	108"	108"
				For Shade Widths to 72"	102"	102"	102"	102"	102"
				For Shade Widths to 84"	84"	84"	84"	84"	84"
				For Shade Widths to 90"	78"	78"	78"	78"	78"
				For Shade Widths to 96"	72"	72"	72"	72"	72"
				For Shade Widths to 102"	60"	60"	60"	60"	60"
3% Sheerweave 2703	126"	YES	YES	Non-Railroaded					
				Maximum Width	96"	96"	96"	96"	96"
					Maximum Height				
				For Shade Widths to 54"	138"	138"	138"	96"	138"
				For Shade Widths to 60"	126"	126"	126"	96"	126"
				For Shade Widths to 66"	108"	108"	108"	96"	108"
				For Shade Widths to 72"	102"	102"	102"	96"	102"
				For Shade Widths to 78"	90"	90"	90"	90"	90"
				For Shade Widths to 84"	84"	84"	84"	84"	84"
				For Shade Widths to 90"	78"	78"	78"	78"	78"
				For Shade Widths to 96"	72"	72"	72"	72"	72"
				Railroaded					
				Maximum Width	96"	96"	96"	96"	96"
					Maximum Height				
				For Shade Widths to 54"	138"	138"	138"	96"	138"
				For Shade Widths to 60"	126"	126"	126"	96"	126"
				For Shade Widths to 66"	108"	108"	108"	96"	108"
				For Shade Widths to 72"	102"	102"	102"	96"	102"
				For Shade Widths to 78"	90"	90"	90"	90"	90"
				For Shade Widths to 84"	84"	84"	84"	84"	84"
				For Shade Widths to 90"	78"	78"	78"	78"	78"
				For Shade Widths to 96"	72"	72"	72"	72"	72"

PRODUCT SIZE SPECIFICATIONS – POWERWAND™

Minimum and Maximum Standards
Please Note: Shade sizes that are wider than the fabric roll width indicated will be made with the fabric turned width for length (railroaded). The maximum width for non-railroaded shades is the roll width unless otherwise noted.

Minimum:	Width	Height
PowerWand	19"	12"

Fabrics turned width for length will have a visible seam when fabricated longer than their maximum roll width less 10". Fabrics turned width for length may have an edge curl. This is not considered a defect in the product.

Material Name	Roll Width	Railroad Option	Splice/ Seam		PowerWand™ Shade Without Top Treament	PowerWand™ Shade with Deluxe	PowerWand™ Shade with Fabric	PowerWand™ Shade with Medium	PowerWand™ Shade with Large
3% Sheerweave 4400	126"	YES	YES	Non-Railroaded					
				Maximum Width	96"	96"	96"	96"	96"
					Maximum Height				
				For Shade Widths to 60"	126"	120"	120"	78"	120"
				For Shade Widths to 72"	102"	102"	102"	78"	102"
				For Shade Widths to 78"	90"	90"	90"	78"	90"
				For Shade Widths to 84"	84"	84"	84"	78"	84"
				For Shade Widths to 90"	78"	78"	78"	78"	78"
				For Shade Widths to 96"	72"	72"	72"	72"	72"
				Railroaded					
				Maximum Width	96"	96"	96"	96"	96"
					Maximum Height				
				For Shade Widths to 60"	126"	120"	120"	78"	120"
				For Shade Widths to 72"	102"	102"	102"	78"	102"
				For Shade Widths to 78"	90"	90"	90"	78"	90"
				For Shade Widths to 84"	84"	84"	84"	78"	84"
				For Shade Widths to 90"	78"	78"	78"	78"	78"
				For Shade Widths to 96"	72"	72"	72"	72"	72"
3% Sheerweave 4600	126"	YES	YES	Non-Railroaded					
				Maximum Width	96"	96"	96"	96"	96"
					Maximum Height				
				For Shade Widths to 54"	120"	120"	120"	120"	120"
				For Shade Widths to 60"	120"	120"	120"	120"	120"
				For Shade Widths to 66"	108"	108"	108"	84"	108"
				For Shade Widths to 72"	102"	102"	102"	84"	102"
				For Shade Widths to 78"	90"	90"	90"	84"	90"
				For Shade Widths to 84"	84"	84"	84"	84"	84"
				For Shade Widths to 90"	78"	78"	78"	78"	78"
				For Shade Widths to 96"	72"	72"	72"	72"	72"
				Railroaded					
				Maximum Width	96"	96"	96"	96"	96"
					Maximum Height				
				For Shade Widths to 54"	120"	120"	120"	120"	120"
				For Shade Widths to 60"	120"	120"	120"	120"	120"
				For Shade Widths to 66"	108"	108"	108"	84"	108"
				For Shade Widths to 72"	102"	102"	102"	84"	102"
				For Shade Widths to 78"	90"	90"	90"	84"	90"
				For Shade Widths to 84"	84"	84"	84"	84"	84"
				For Shade Widths to 90"	78"	78"	78"	78"	78"
				For Shade Widths to 96"	72"	72"	72"	72"	72"
3% Sheerweave 4903	98"	NO	NO	Non-Railroaded					
				Maximum Width	96"	88"	88"	96"	96"
					Maximum Height				
				For Shade Widths to 54"	138"	138"	138"	90"	138"
				For Shade Widths to 60"	126"	126"	126"	90"	126"
				For Shade Widths to 66"	108"	108"	108"	90"	108"
				For Shade Widths to 72"	102"	102"	102"	90"	102"
				For Shade Widths to 78"	90"	90"	90"	90"	90"
				For Shade Widths to 84"	84"	84"	84"	84"	84"
				For Shade Widths to 88"	78"	78"	78"	78"	78"
				For Shade Widths to 90"	78"	NA	NA	78"	78"
				For Shade Widths to 96"	72"	NA	NA	72"	72"
3% Sheerweave 5000 *(R07_02, 04, 05, 07, 10)*	98"	NO	NO	Non-Railroaded					
				Maximum Width	96"	88"	88"	96"	96"
					Maximum Height				
				For Shade Widths to 60"	126"	72"	72"	42"	72"
				For Shade Widths to 72"	102"	72"	72"	42"	72"
				For Shade Widths to 78"	90"	72"	72"	42"	72"
				For Shade Widths to 84"	84"	72"	72"	42"	72"
				For Shade Widths to 88"	78"	72"	72"	42"	72"
				For Shade Widths to 90"	78"	NA	NA	42"	72"
				For Shade Widths to 96"	72"	NA	NA	42"	72"

PRODUCT SIZE SPECIFICATIONS – POWERWAND™

Minimum and Maximum Standards

Please Note: Shade sizes that are wider than the fabric roll width indicated will be made with the fabric turned width for length (railroaded). The maximum width for non-railroaded shades is the roll width unless otherwise noted.

Minimum:	Width	Height
PowerWand	19"	12"

Fabrics turned width for length will have a visible seam when fabricated longer than their maximum roll width less 10". Fabrics turned width for length may have an edge curl. This is not considered a defect in the product.

Material Name	Roll Width	Railroad Option	Splice/ Seam		PowerWand™ Shade Without Top Treament	PowerWand™ Shade with Deluxe	PowerWand™ Shade with Fabric	PowerWand™ Shade with Medium	PowerWand™ Shade with Large
3% Sheerweave 5000	**98"**	**NO**	**NO**	**Non-Railroaded**					
(R07_R11, R89, R90, R93, U10, U11)				**Maximum Width**	**96"**	**88"**	**88"**	**96"**	**96"**
					Maximum Height				
				For Shade Widths to 54"	138"	78"	78"	48"	78"
				For Shade Widths to 60"	126"	78"	78"	48"	78"
				For Shade Widths to 66"	108"	78"	78"	48"	78"
				For Shade Widths to 72"	102"	78"	78"	48"	78"
				For Shade Widths to 78"	90"	78"	78"	48"	78"
				For Shade Widths to 84"	84"	78"	78"	48"	78"
				For Shade Widths to 88"	78"	78"	78"	48"	78"
				For Shade Widths to 90"	78"	N/A	N/A	48"	78"
				For Shade Widths to 96"	72"	N/A	N/A	48"	72"
3% T Screen	**98"**	**YES**	**NO**	**Non-Railroaded**					
				Maximum Width	**98"**	**88"**	**88"**	**98"**	**98"**
					Maximum Height				
				For Shade Widths to 66"	144"	144"	144"	108"	144"
				For Shade Widths to 72"	138"	138"	138"	108"	138"
				For Shade Widths to 84"	120"	120"	120"	108"	120"
				For Shade Widths to 88"	108"	108"	108"	108"	108"
				For Shade Widths to 90"	108"	NA	NA	108"	108"
				For Shade Widths to 96"	102"	NA	NA	102"	102"
				For Shade Widths to 98"	84"	NA	NA	84"	84"
				Railroaded					
				Maximum Width	**108"**	**108"**	**108"**	**108"**	**108"**
					Maximum Height				
				For Shade Widths to 96"	86"	86"	86"	86"	86"
				For Shade Widths to 102"	84"	84"	84"	84"	84"
				For Shade Widths to 108"	66"	66"	66"	66"	66"
4% S Screen	**122"**	**NO**	**NO**	**Non-Railroaded**					
				Maximum Width	**96"**	**96"**	**96"**	**96"**	**96"**
					Maximum Height				
				For Shade Widths to 60"	126"	120"	120"	72"	120"
				For Shade Widths to 72"	102"	102"	102"	72"	102"
				For Shade Widths to 78"	90"	90"	90"	72"	90"
				For Shade Widths to 84"	84"	84"	84"	72"	84"
				For Shade Widths to 90"	78"	78"	78"	72"	78"
				For Shade Widths to 96"	72"	72"	72"	72"	72"
4% Silver Screen	**94"**	**YES**	**YES**	**Non-Railroaded**					
				Maximum Width	**94"**	**84"**	**84"**	**94"**	**94"**
					Maximum Height				
				For Shade Widths to 66"	144"	144"	144"	144"	144"
				For Shade Widths to 72"	138"	138"	138"	138"	138"
				For Shade Widths to 84"	120"	120"	120"	120"	120"
				For Shade Widths to 90"	108"	NA	NA	108"	108"
				For Shade Widths to 94"	102"	NA	NA	102"	102"
				Railroaded					
				Maximum Width	**102"**	**102"**	**102"**	**102"**	**102"**
					Maximum Height				
				For Shade Widths to 66"	144"	144"	144"	144"	144"
				For Shade Widths to 72"	138"	138"	138"	138"	138"
				For Shade Widths to 84"	120"	120"	120"	120"	120"
				For Shade Widths to 90"	108"	108"	108"	108"	108"
				For Shade Widths to 94"	102"	102"	102"	102"	102"
				For Shade Widths to 102"	84"	84"	84"	84"	84"
5% E Screen	**122"**	**YES**	**YES**	**Non-Railroaded**					
				Maximum Width	**102"**	**102"**	**102"**	**102"**	**102"**
					Maximum Height				
				For Shade Widths to 66"	144"	144"	144"	144"	144"
				For Shade Widths to 72"	138"	138"	138"	138"	138"
				For Shade Widths to 84"	120"	120"	120"	120"	120"
				For Shade Widths to 90"	108"	108"	108"	108"	108"
				For Shade Widths to 96"	102"	102"	102"	102"	102"
				For Shade Widths to 102"	84"	84"	84"	84"	84"
				Railroaded					
				Maximum Width	**102"**	**102"**	**102"**	**102"**	**102"**
					Maximum Height				
				For Shade Widths to 66"	144"	144"	144"	144"	144"
				For Shade Widths to 72"	138"	138"	138"	138"	138"
				For Shade Widths to 84"	120"	120"	120"	120"	120"
				For Shade Widths to 90"	108"	108"	108"	108"	108"
				For Shade Widths to 96"	102"	102"	102"	102"	102"
				For Shade Widths to 102"	84"	84"	84"	84"	84"

PRODUCT SIZE SPECIFICATIONS – POWERWAND™

Minimum and Maximum Standards
Please Note: Shade sizes that are wider than the fabric roll width indicated will be made with the fabric turned width for length (railroaded). The maximum width for non-railroaded shades is the roll width unless otherwise noted.

Minimum:	Width	Height
PowerWand	19"	12"

Fabrics turned width for length will have a visible seam when fabricated longer than their maximum roll width less 10". Fabrics turned width for length may have an edge curl. This is not considered a defect in the product.

Material Name	Roll Width	Railroad Option	Splice/ Seam		PowerWand™ Shade Without Top Treament	PowerWand™ Shade with Deluxe	PowerWand™ Shade with Fabric	PowerWand™ Shade with Medium	PowerWand™ Shade with Large
5% M Screen Deco	98"	YES	YES	Non-Railroaded					
				Maximum Width	96"	88"	88"	96"	96"
					Maximum Height				
				For Shade Widths to 66"	144"	144"	144"	120"	144"
				For Shade Widths to 72"	138"	138"	138"	120"	138"
				For Shade Widths to 84"	120"	120"	120"	120"	120"
				For Shade Widths to 88"	108"	108"	108"	108"	108"
				For Shade Widths to 90"	108"	NA	NA	108"	108"
				For Shade Widths to 96"	102"	NA	NA	102"	102"
				Railroaded					
				Maximum Width	102"	102"	102"	102"	102"
					Maximum Height				
				For Shade Widths to 66"	144"	144"	144"	120"	144"
				For Shade Widths to 72"	138"	138"	138"	120"	138"
				For Shade Widths to 84"	120"	120"	120"	120"	120"
				For Shade Widths to 90"	108"	108"	108"	108"	108"
				For Shade Widths to 96"	102"	102"	102"	102"	102"
				For Shade Widths to 102"	84"	84"	84"	84"	84"
5% Sheerweave 2000	126"	YES	YES	Non-Railroaded					
				Maximum Width	96"	96"	96"	96"	96"
					Maximum Height				
				For Shade Widths to 54"	138"	138"	138"	132"	138"
				For Shade Widths to 60"	126"	126"	126"	126"	126"
				For Shade Widths to 66"	108"	108"	108"	108"	108"
				For Shade Widths to 72"	102"	102"	102"	102"	102"
				For Shade Widths to 78"	90"	90"	90"	90"	90"
				For Shade Widths to 84"	84"	84"	84"	84"	84"
				For Shade Widths to 90"	78"	78"	78"	78"	78"
				For Shade Widths to 96"	72"	72"	72"	72"	72"
				Railroaded					
				Maximum Width	96"	96"	96"	96"	96"
					Maximum Height				
				For Shade Widths to 54"	120"	120"	120"	120"	120"
				For Shade Widths to 60"	120"	120"	120"	120"	120"
				For Shade Widths to 66"	108"	108"	108"	108"	108"
				For Shade Widths to 72"	102"	102"	102"	102"	102"
				For Shade Widths to 78"	90"	90"	90"	90"	90"
				For Shade Widths to 84"	84"	84"	84"	84"	84"
				For Shade Widths to 90"	78"	78"	78"	78"	78"
				For Shade Widths to 96"	72"	72"	72"	72"	72"
5% Sheerweave 2390	126"	YES	YES	Non-Railroaded					
				Maximum Width	102"	102"	102"	102"	102"
					Maximum Height				
				For Shade Widths to 66"	144"	144"	144"	144"	144"
				For Shade Widths to 72"	138"	138"	138"	138"	138"
				For Shade Widths to 84"	120"	120"	120"	120"	120"
				For Shade Widths to 90"	108"	108"	108"	108"	108"
				For Shade Widths to 96"	102"	102"	102"	102"	102"
				For Shade Widths to 102"	84"	84"	84"	84"	84"
				Railroaded					
				Maximum Width	102"	102"	102"	102"	102"
					Maximum Height				
				For Shade Widths to 66"	144"	144"	144"	144"	144"
				For Shade Widths to 72"	138"	138"	138"	138"	138"
				For Shade Widths to 84"	120"	120"	120"	120"	120"
				For Shade Widths to 90"	108"	108"	108"	108"	108"
				For Shade Widths to 96"	102"	102"	102"	102"	102"
				For Shade Widths to 102"	84"	84"	84"	84"	84"

PRODUCT SIZE SPECIFICATIONS – POWERWAND™

Minimum and Maximum Standards
Please Note: Shade sizes that are wider than the fabric roll width indicated will be made with the fabric turned width for length (railroaded). The maximum width for non-railroaded shades is the roll width unless otherwise noted.

Minimum:	Width	Height
PowerWand	19"	12"

Fabrics turned width for length will have a visible seam when fabricated longer than their maximum roll width less 10". Fabrics turned width for length may have an edge curl. This is not considered a defect in the product.

Material Name	Roll Width	Railroad Option	Splice/ Seam		PowerWand™ Shade Without Top Treament	PowerWand™ Shade with Deluxe	PowerWand™ Shade with Fabric	PowerWand™ Shade with Medium	PowerWand™ Shade with Large
5% Sheerweave 2705	**126"**	**NO**	**NO**	**Non-Railroaded**					
				Maximum Width	**98"**	**98"**	**N/A**	**98"**	**98"**
					Maximum Height				
				For Shade Widths to 66"	120"	120"	N/A	102"	120"
				For Shade Widths to 72"	120"	120"	N/A	102"	120"
				For Shade Widths to 78"	120"	120"	N/A	102"	120"
				For Shade Widths to 84"	120"	120"	N/A	102"	120"
				For Shade Widths to 90"	108"	108"	N/A	102"	108"
				For Shade Widths to 96"	102"	102"	N/A	102"	102"
				For Shade Widths to 98"	84"	84"	NA	84"	84"
5% Sheerweave 4000	**126"**	**YES**	**YES**	**Non-Railroaded**					
				Maximum Width	**96"**	**96"**	**96"**	**96"**	**96"**
					Maximum Height				
				For Shade Widths to 60"	126"	114"	114"	72"	114"
				For Shade Widths to 66"	108"	108"	108"	72"	108"
				For Shade Widths to 72"	102"	102"	102"	72"	102"
				For Shade Widths to 78"	90"	90"	90"	72"	90"
				For Shade Widths to 84"	84"	84"	84"	72"	84"
				For Shade Widths to 90"	78"	78"	78"	72"	78"
				For Shade Widths to 96"	72"	72"	72"	72"	72"
				Railroaded					
				Maximum Width	**96"**	**96"**	**96"**	**96"**	**96"**
					Maximum Height				
				For Shade Widths to 60"	126"	114"	114"	72"	114"
				For Shade Widths to 66"	108"	108"	108"	72"	108"
				For Shade Widths to 72"	102"	102"	102"	72"	102"
				For Shade Widths to 78"	90"	90"	90"	72"	90"
				For Shade Widths to 84"	84"	84"	84"	72"	84"
				For Shade Widths to 90"	78"	78"	78"	72"	78"
				For Shade Widths to 96"	72"	72"	72"	72"	72"
5% Sheerweave 4500	**126"**	**YES**	**YES**	**Non-Railroaded**					
				Maximum Width	**96"**	**96"**	**96"**	**96"**	**96"**
					Maximum Height				
				For Shade Widths to 54"	138"	138"	138"	108"	138"
				For Shade Widths to 60"	126"	126"	126"	108"	126"
				For Shade Widths to 66"	108"	108"	108"	108"	108"
				For Shade Widths to 72"	102"	102"	102"	102"	102"
				For Shade Widths to 78"	90"	90"	90"	90"	90"
				For Shade Widths to 84"	84"	84"	84"	84"	84"
				For Shade Widths to 90"	78"	78"	78"	78"	78"
				For Shade Widths to 96"	72"	72"	72"	72"	72"
				Railroaded					
				Maximum Width	**96"**	**96"**	**96"**	**96"**	**96"**
					Maximum Height				
				For Shade Widths to 54"	138"	138"	138"	108"	138"
				For Shade Widths to 60"	126"	126"	126"	108"	126"
				For Shade Widths to 66"	108"	108"	108"	108"	108"
				For Shade Widths to 72"	102"	102"	102"	102"	102"
				For Shade Widths to 78"	90"	90"	90"	90"	90"
				For Shade Widths to 84"	84"	84"	84"	84"	84"
				For Shade Widths to 90"	78"	78"	78"	78"	78"
				For Shade Widths to 96"	72"	72"	72"	72"	72"
5% Sheerweave 5000 *(R10_01, 03, 06, 07, 09, 10, 11, 12, 13,14, 15, 16, 17, 18, 19, 20, 21)*	**98"**	**NO**	**NO**	**Non-Railroaded**					
				Maximum Width	**98"**	**88"**	**88"**	**98"**	**98"**
					Maximum Height				
				For Shade Widths to 60"	126"	90"	90"	54"	90"
				For Shade Widths to 66"	108"	90"	90"	54"	90"
				For Shade Widths to 72"	102"	90"	90"	54"	90"
				For Shade Widths to 84"	84"	84"	84"	54"	84"
				For Shade Widths to 88"	78"	78"	78"	54"	78"
				For Shade Widths to 90"	78"	NA	NA	54"	78"
				For Shade Widths to 98"	60"	NA	NA	54"	60"

PRODUCT SIZE SPECIFICATIONS – POWERWAND™

Minimum and Maximum Standards
Please Note: Shade sizes that are wider than the fabric roll width indicated will be made with the fabric turned width for length (railroaded). The maximum width for non-railroaded shades is the roll width unless otherwise noted.

Minimum:	Width	Height
PowerWand	19"	12"

Fabrics turned width for length will have a visible seam when fabricated longer than their maximum roll width less 10". Fabrics turned width for length may have an edge curl. This is not considered a defect in the product.

Material Name	Roll Width	Railroad Option	Splice/ Seam		PowerWand™ Shade Without Top Treament	PowerWand™ Shade with Deluxe	PowerWand™ Shade with Fabric	PowerWand™ Shade with Medium	PowerWand™ Shade with Large
5% Sheerweave 5000 *(R10_Q51, S77, S84)*	**98"**	**NO**	**NO**	**Non-Railroaded**					
				Maximum Width	**96"**	**88"**	**88"**	**96"**	**96"**
					Maximum Height				
				For Shade Widths to 54"	138"	90"	90"	58"	90"
				For Shade Widths to 60"	126"	90"	90"	58"	90"
				For Shade Widths to 66"	108"	90"	90"	58"	90"
				For Shade Widths to 72"	102"	90"	90"	58"	90"
				For Shade Widths to 78"	90"	90"	90"	58"	90"
				For Shade Widths to 84"	84"	84"	84"	58"	84"
				For Shade Widths to 88"	78"	78"	78"	58"	78"
				For Shade Widths to 90"	78"	N/A	N/A	58"	78"
				For Shade Widths to 96"	72"	N/A	N/A	58"	72"
5% Sheerweave 5000 *(R10_Q43, S82)*	**98"**	**NO**	**NO**	**Non-Railroaded**					
				Maximum Width	**96"**	**88"**	**88"**	**96"**	**96"**
					Maximum Height				
				For Shade Widths to 54"	138"	102"	102"	66"	102"
				For Shade Widths to 60"	126"	102"	102"	66"	102"
				For Shade Widths to 66"	108"	102"	102"	66"	102"
				For Shade Widths to 72"	102"	102"	102"	66"	102"
				For Shade Widths to 78"	90"	90"	90"	66"	90"
				For Shade Widths to 84"	84"	84"	84"	66"	84"
				For Shade Widths to 88"	78"	78"	78"	66"	78"
				For Shade Widths to 90"	78"	N/A	N/A	66"	78"
				For Shade Widths to 96"	72"	N/A	N/A	66"	72"
7% Global Screen	**118"**	**YES**	**YES**	**Non-Railroaded**					
				Maximum Width	**108"**	**108"**	**108"**	**108"**	**108"**
					Maximum Height				
				For Shade Widths to 66"	144"	144"	144"	126"	144"
				For Shade Widths to 72"	138"	138"	138"	126"	138"
				For Shade Widths to 78"	126"	126"	126"	126"	126"
				For Shade Widths to 84"	120"	120"	120"	120"	120"
				For Shade Widths to 90"	108"	108"	108"	108"	108"
				For Shade Widths to 96"	102"	102"	102"	102"	102"
				For Shade Widths to 102"	84"	84"	84"	84"	84"
				For Shade Widths to 108"	66"	66"	66"	66"	66"
				Railroaded					
				Maximum Width	**108"**	**108"**	**108"**	**108"**	**108"**
					Maximum Height				
				For Shade Widths to 66"	144"	144"	144"	126"	144"
				For Shade Widths to 72"	138"	138"	138"	126"	138"
				For Shade Widths to 78"	126"	126"	126"	126"	126"
				For Shade Widths to 84"	120"	120"	120"	120"	120"
				For Shade Widths to 90"	108"	108"	108"	108"	108"
				For Shade Widths to 96"	102"	102"	102"	102"	102"
				For Shade Widths to 102"	84"	84"	84"	84"	84"
				For Shade Widths to 108"	66"	66"	66"	66"	66"
7% Sheerweave 5000 *(R34_Q46)*	**98"**	**NO**	**NO**	**Non-Railroaded**					
				Maximum Width	**96"**	**88"**	**88"**	**96"**	**96"**
					Maximum Height				
				For Shade Widths to 60"	126"	102"	102"	66"	102"
				For Shade Widths to 66"	108"	102"	102"	66"	102"
				For Shade Widths to 72"	102"	102"	102"	66"	102"
				For Shade Widths to 84"	84"	84"	84"	66"	84"
				For Shade Widths to 88"	78"	78"	78"	66"	78"
				For Shade Widths to 90"	78"	NA	NA	66"	78"
				For Shade Widths to 96"	72"	NA	NA	66"	72"
7% Sheerweave 5000 *(R34_08, 09)*	**98"**	**NO**	**NO**	**Non-Railroaded**					
				Maximum Width	**96"**	**88"**	**88"**	**96"**	**96"**
					Maximum Height				
				For Shade Widths to 60"	126"	126"	126"	78"	126"
				For Shade Widths to 66"	108"	108"	108"	78"	108"
				For Shade Widths to 72"	102"	102"	102"	78"	102"
				For Shade Widths to 84"	84"	84"	84"	78"	84"
				For Shade Widths to 88"	78"	78"	78"	78"	78"
				For Shade Widths to 90"	78"	NA	NA	78"	78"
				For Shade Widths to 96"	72"	NA	NA	72"	72"

PRODUCT SIZE SPECIFICATIONS – POWERWAND™

Minimum and Maximum Standards
Please Note: Shade sizes that are wider than the fabric roll width indicated will be made with the fabric turned width for length (railroaded). The maximum width for non-railroaded shades is the roll width unless otherwise noted.

Minimum:	Width	Height
PowerWand	19"	12"

Fabrics turned width for length will have a visible seam when fabricated longer than their maximum roll width less 10". Fabrics turned width for length may have an edge curl. This is not considered a defect in the product.

Material Name	Roll Width	Railroad Option	Splice/ Seam		PowerWand™ Shade Without Top Treament	PowerWand™ Shade with Deluxe	PowerWand™ Shade with Fabric	PowerWand™ Shade with Medium	PowerWand™ Shade with Large
7% Sheerweave 5000 *(R34_S73)*	**98"**	**NO**	**NO**	**Non-Railroaded**					
				Maximum Width	**96"**	**88"**	**88"**	**96"**	**96"**
					Maximum Height				
				For Shade Widths to 54"	138"	96"	96"	60"	96"
				For Shade Widths to 60"	126"	96"	96"	60"	96"
				For Shade Widths to 66"	108"	96"	96"	60"	96"
				For Shade Widths to 72"	102"	96"	96"	60"	96"
				For Shade Widths to 78"	90"	90"	90"	60"	90"
				For Shade Widths to 84"	84"	84"	84"	60"	84"
				For Shade Widths to 88"	78"	78"	78"	60"	78"
				For Shade Widths to 90"	78"	N/A	N/A	60"	78"
				For Shade Widths to 96"	72"	N/A	N/A	60"	72"
10% E Screen	**122"**	**YES**	**YES**	**Non-Railroaded**					
				Maximum Width	**102"**	**102"**	**102"**	**102"**	**102"**
					Maximum Height				
				For Shade Widths to 66"	144"	144"	144"	138"	144"
				For Shade Widths to 72"	138"	138"	138"	138"	138"
				For Shade Widths to 84"	120"	120"	120"	120"	120"
				For Shade Widths to 90"	108"	108"	108"	108"	108"
				For Shade Widths to 96"	102"	102"	102"	102"	102"
				For Shade Widths to 102"	84"	84"	84"	84"	84"
				Railroaded					
				Maximum Width	**102"**	**102"**	**102"**	**102"**	**102"**
					Maximum Height				
				For Shade Widths to 66"	144"	144"	144"	138"	144"
				For Shade Widths to 72"	138"	138"	138"	138"	138"
				For Shade Widths to 84"	120"	120"	120"	120"	120"
				For Shade Widths to 90"	108"	108"	108"	108"	108"
				For Shade Widths to 96"	102"	102"	102"	102"	102"
				For Shade Widths to 102"	84"	84"	84"	84"	84"
10% Sheerweave 2360	**126"**	**NO**	**NO**	**Non-Railroaded**					
				Maximum Width	**102"**	**102"**	**102"**	**102"**	**102"**
					Maximum Height				
				For Shade Widths to 66"	144"	144"	144"	138"	144"
				For Shade Widths to 72"	138"	138"	138"	138"	138"
				For Shade Widths to 78"	126"	126"	126"	126"	126"
				For Shade Widths to 84"	120"	120"	120"	120"	120"
				For Shade Widths to 90"	108"	108"	108"	108"	108"
				For Shade Widths to 96"	102"	102"	102"	102"	102"
				For Shade Widths to 102"	84"	84"	84"	84"	84"
10% Sheerweave 4100	**98"**	**YES**	**YES**	**Non-Railroaded**					
				Maximum Width	**96"**	**88"**	**88"**	**96"**	**96"**
					Maximum Height				
				For Shade Widths to 54"	138"	120"	120"	78"	120"
				For Shade Widths to 60"	126"	120"	120"	78"	120"
				For Shade Widths to 66"	108"	108"	108"	78"	108"
				For Shade Widths to 72"	102"	102"	102"	78"	102"
				For Shade Widths to 78"	90"	90"	90"	78"	90"
				For Shade Widths to 84"	84"	84"	84"	78"	84"
				For Shade Widths to 88"	78"	78"	78"	78"	78"
				For Shade Widths to 90"	78"	N/A	N/A	78"	78"
				For Shade Widths to 96"	72"	N/A	N/A	72"	72"
				Railroaded					
				Maximum Width	**96"**	**96"**	**96"**	**96"**	**96"**
					Maximum Height				
				For Shade Widths to 54"	120"	120"	120"	78"	120"
				For Shade Widths to 60"	120"	120"	120"	78"	120"
				For Shade Widths to 66"	108"	108"	108"	78"	108"
				For Shade Widths to 72"	102"	102"	102"	78"	102"
				For Shade Widths to 78"	90"	90"	90"	78"	90"
				For Shade Widths to 84"	84"	84"	84"	78"	84"
				For Shade Widths to 90"	78"	78"	78"	78"	78"
				For Shade Widths to 96"	72"	72"	72"	72"	72"

PRODUCT SIZE SPECIFICATIONS – POWERWAND™

Minimum and Maximum Standards
Please Note: Shade sizes that are wider than the fabric roll width indicated will be made with the fabric turned width for length (railroaded). The maximum width for non-railroaded shades is the roll width unless otherwise noted.

Minimum:	Width	Height
PowerWand	19"	12"

Fabrics turned width for length will have a visible seam when fabricated longer than their maximum roll width less 10". Fabrics turned width for length may have an edge curl. This is not considered a defect in the product.

Material Name	Roll Width	Railroad Option	Splice/ Seam		PowerWand™ Shade Without Top Treament	PowerWand™ Shade with Deluxe	PowerWand™ Shade with Fabric	PowerWand™ Shade with Medium	PowerWand™ Shade with Large
10% Sheerweave 5000 *(R26_03)*	**98"**	**NO**	**NO**	**Non-Railroaded**					
				Maximum Width	**98"**	**88"**	**88"**	**98"**	**98"**
					Maximum Height				
				For Shade Widths to 60"	126"	90"	90"	54"	90"
				For Shade Widths to 66"	108"	90"	90"	54"	90"
				For Shade Widths to 72"	102"	90"	90"	54"	90"
				For Shade Widths to 84"	84"	84"	84"	54"	84"
				For Shade Widths to 88"	78"	78"	78"	54"	78"
				For Shade Widths to 90"	78"	NA	NA	54"	78"
				For Shade Widths to 98"	60"	NA	NA	54"	60"
10% Sheerweave 5000 *(R26_U16, U24, U28, U29)*	**98"**	**NO**	**NO**	**Non-Railroaded**					
				Maximum Width	**96"**	**88"**	**88"**	**96"**	**96"**
					Maximum Height				
				For Shade Widths to 54"	138"	102"	102"	66"	102"
				For Shade Widths to 60"	126"	102"	102"	66"	102"
				For Shade Widths to 66"	108"	102"	102"	66"	102"
				For Shade Widths to 72"	102"	102"	102"	66"	102"
				For Shade Widths to 78"	90"	90"	90"	66"	90"
				For Shade Widths to 84"	84"	84"	84"	66"	84"
				For Shade Widths to 88"	78"	78"	78"	66"	78"
				For Shade Widths to 90"	78"	N/A	N/A	66"	78"
				For Shade Widths to 96"	72"	N/A	N/A	66"	72"

PRODUCT SIZE SPECIFICATIONS – POWERWAND™

Minimum and Maximum Standards
Please Note: Shade sizes that are wider than the fabric roll width indicated will be made with the fabric turned width for length (railroaded). The maximum width for non-railroaded shades is the roll width unless otherwise noted.

Minimum:	Width	Height
PowerWand	19"	12"

Fabrics turned width for length will have a visible seam when fabricated longer than their maximum roll width less 10". Fabrics turned width for length may have an edge curl. This is not considered a defect in the product.

Material Name	Roll Width	Railroad Option	Splice/ Seam		PowerWand™ Shade Without Top Treament	PowerWand™ Shade with Deluxe	PowerWand™ Shade with Fabric	PowerWand™ Shade with Medium	PowerWand™ Shade with Large
Alexandria	**78"**	**NO**	**NO**	**Non-Railroaded**					
				Maximum Width	**78"**	**66"**	**66"**	**78"**	**78"**
					Maximum Height				
				For Shade Widths to 66"	144"	144"	144"	144"	144"
				For Shade Widths to 78"	144"	NA	NA	144"	144"
Astaire	**94"**	**NO**	**NO**	**Non-Railroaded**					
				Maximum Width	**94"**	**NA**	**NA**	**94"**	**94"**
					Maximum Height				
				For Shade Widths to 94"	144"	NA	NA	72"	120"
Avila R Blackout	**118"**	**YES**	**YES**	**Non-Railroaded**					
				Maximum Width	**102"**	**102"**	**102"**	**102"**	**102"**
					Maximum Height				
				For Shade Widths to 66"	144"	144"	144"	144"	144"
				For Shade Widths to 72"	138"	138"	138"	138"	138"
				For Shade Widths to 84"	120"	120"	120"	120"	120"
				For Shade Widths to 90"	108"	108"	108"	108"	108"
				For Shade Widths to 96"	102"	102"	102"	102"	102"
				For Shade Widths to 102"	84"	84"	84"	84"	84"
				Railroaded					
				Maximum Width	**102"**	**102"**	**102"**	**102"**	**102"**
					Maximum Height				
				For Shade Widths to 84"	120"	120"	120"	120"	120"
				For Shade Widths to 90"	108"	108"	108"	108"	108"
				For Shade Widths to 96"	102"	102"	102"	102"	102"
				For Shade Widths to 102"	84"	84"	84"	84"	84"
Baroque	**78"**	**NO**	**NO**	**Non-Railroaded**					
				Maximum Width	**78"**	**66"**	**66"**	**78"**	**78"**
					Maximum Height				
				For Shade Widths to 66"	144"	144"	144"	144"	144"
				For Shade Widths to 72"	138"	NA	NA	138"	138"
				For Shade Widths to 78"	126"	NA	NA	126"	126"
Blackout - Solid	**72"**	**YES**	**YES**	**Non-Railroaded**					
				Maximum Width	**72"**	**60"**	**N/A**	**72"**	**72"**
					Maximum Height				
				For Shade Widths to 60"	144"	144"	N/A	144"	144"
				For Shade Widths to 66"	144"	NA	NA	144"	144"
				For Shade Widths to 72"	138"	NA	NA	138"	138"
				Railroaded					
				Maximum Width	**108"**	**108"**	**N/A**	**108"**	**108"**
					Maximum Height				
				For Shade Widths to 66"	144"	144"	N/A	144"	144"
				For Shade Widths to 72"	138"	138"	N/A	138"	138"
				For Shade Widths to 84"	120"	120"	N/A	120"	120"
				For Shade Widths to 90"	108"	108"	N/A	108"	108"
				For Shade Widths to 96"	102"	102"	N/A	102"	102"
				For Shade Widths to 102"	84"	84"	N/A	84"	84"
				For Shade Widths to 108"	66"	66"	N/A	66"	66"

PRODUCT SIZE SPECIFICATIONS – POWERWAND™

Minimum and Maximum Standards
Please Note: Shade sizes that are wider than the fabric roll width indicated will be made with the fabric turned width for length (railroaded). The maximum width for non-railroaded shades is the roll width unless otherwise noted.

Minimum:	Width	Height
PowerWand	19"	12"

Fabrics turned width for length will have a visible seam when fabricated longer than their maximum roll width less 10". Fabrics turned width for length may have an edge curl. This is not considered a defect in the product.

Material Name	Roll Width	Railroad Option	Splice/ Seam		PowerWand™ Shade Without Top Treament	PowerWand™ Shade with Deluxe	PowerWand™ Shade with Fabric	PowerWand™ Shade with Medium	PowerWand™ Shade with Large
Brilliance	**118"**	**NO**	**NO**	**Non-Railroaded**					
				Maximum Width	**114"**	**108¨**	**108"**	**114"**	**114"**
					Maximum Height				
				For Shade Widths to 102"	144"	144"	144"	144"	144"
				For Shade Widths to 108"	108"	108"	108"	108"	108"
				For Shade Widths to 114"	84"	NA	NA	84"	84"
Brilliance Blackout	**118"**	**NO**	**NO**	**Non-Railroaded**					
				Maximum Width	**102"**	**102"**	**102"**	**102"**	**102"**
					Maximum Height				
				For Shade Widths to 66"	144"	144"	144"	114"	144"
				For Shade Widths to 72"	138"	138"	138"	114"	138"
				For Shade Widths to 84"	120"	120"	120"	114"	120"
				For Shade Widths to 90"	108"	108"	108"	108"	108"
				For Shade Widths to 96"	102"	102"	102"	102"	102"
				For Shade Widths to 102"	84"	84"	84"	84"	84"
Carrara	**110"**	**NO**	**NO**	**Non-Railroaded**					
				Maximum Width	**110"**	**100"**	**100"**	**110"**	**110"**
					Maximum Height				
				For Shade Widths to 66"	144"	144"	144"	144"	144"
				For Shade Widths to 78"	126"	126"	126"	126"	126"
				For Shade Widths to 90"	108"	108"	108"	108"	108"
				For Shade Widths to 100"	84"	84"	84"	84"	84"
				For Shade Widths to 102"	84"	NA	NA	84"	84"
				For Shade Widths to 108"	66"	NA	NA	66"	66"
				For Shade Widths to 110"	48"	NA	NA	48"	48"
Carrara Blackout	**110"**	**NO**	**NO**	**Non-Railroaded**					
				Maximum Width	**96"**	**96"**	**96"**	**96"**	**96"**
					Maximum Height				
				For Shade Widths to 60"	126"	126"	126"	96"	126"
				For Shade Widths to 72"	102"	102"	102"	96"	102"
				For Shade Widths to 78"	90"	90"	90"	90"	90"
				For Shade Widths to 84"	84"	84"	84"	84"	84"
				For Shade Widths to 90"	78"	78"	78"	78"	78"
				For Shade Widths to 96"	72"	72"	72"	72"	72"
Claudio	**110"**	**NO**	**NO**	**Non-Railroaded**					
				Maximum Width	**110"**	**100"**	**100"**	**110"**	**110"**
					Maximum Height				
				For Shade Widths to 100"	144"	144"	144"	144"	144"
				For Shade Widths to 102"	144"	NA	NA	144"	144"
				For Shade Widths to 110"	84"	NA	NA	84"	84"
Claudio Blackout	**110"**	**NO**	**NO**	**Non-Railroaded**					
				Maximum Width	**102"**	**100"**	**100"**	**102"**	**102"**
					Maximum Height				
				For Shade Widths to 66"	144"	144"	144"	114"	144"
				For Shade Widths to 72"	138"	138"	138"	114"	138"
				For Shade Widths to 78"	126"	126"	126"	114"	126"
				For Shade Widths to 84"	120"	120"	120"	114"	120"
				For Shade Widths to 90"	108"	108"	108"	108"	108"
				For Shade Widths to 96"	102"	102"	102"	102"	102"
				For Shade Widths to 100"	84"	84"	84"	84"	84"
				For Shade Widths to 102"	84"	NA	NA	84"	84"

PRODUCT SIZE SPECIFICATIONS – POWERWAND™

Minimum and Maximum Standards
Please Note: Shade sizes that are wider than the fabric roll width indicated will be made with the fabric turned width for length (railroaded). The maximum width for non-railroaded shades is the roll width unless otherwise noted.

Minimum:	Width	Height
PowerWand	19"	12"

Fabrics turned width for length will have a visible seam when fabricated longer than their maximum roll width less 10". Fabrics turned width for length may have an edge curl. This is not considered a defect in the product.

Material Name	Roll Width	Railroad Option	Splice/ Seam		PowerWand™ Shade Without Top Treament	PowerWand™ Shade with Deluxe	PowerWand™ Shade with Fabric	PowerWand™ Shade with Medium	PowerWand™ Shade with Large
Cusco	110"	YES	YES	Non-Railroaded					
				Maximum Width	102"	100"	100"	102"	102"
					Maximum Height				
				For Shade Widths to 66"	144"	144"	144"	130"	144"
				For Shade Widths to 72"	138"	138"	138"	130"	138"
				For Shade Widths to 84"	120"	120"	120"	120"	120"
				For Shade Widths to 90"	108"	108"	108"	108"	108"
				For Shade Widths to 96"	102"	102"	102"	102"	102"
				For Shade Widths to 100"	84"	84"	84"	84"	84"
				For Shade Widths to 102"	84"	NA	NA	84"	84"
				Railroaded					
				Maximum Width	102"	102"	102"	102"	102"
					Maximum Height				
				For Shade Widths to 66"	144"	144"	144"	130"	144"
				For Shade Widths to 72"	138"	138"	138"	130"	138"
				For Shade Widths to 84"	120"	120"	120"	120"	120"
				For Shade Widths to 90"	108"	108"	108"	108"	108"
				For Shade Widths to 96"	102"	102"	102"	102"	102"
				For Shade Widths to 102"	84"	84"	84"	84"	84"
Darien	90"	NO	NO	Non-Railroaded					
				Maximum Width	90"	80"	80"	90"	90"
					Maximum Height				
				For Shade Widths to 80"	144"	144"	144"	144"	144"
				For Shade Widths to 90"	144"	NA	NA	144"	144"
Drizzle	94"	YES	YES	Non-Railroaded					
				Maximum Width	94"	84"	84"	94"	94"
					Maximum Height				
				For Shade Widths to 66"	144"	144"	144"	144"	144"
				For Shade Widths to 78"	144"	144"	144"	144"	144"
				For Shade Widths to 84"	144"	144"	144"	144"	144"
				For Shade Widths to 90"	144"	NA	NA	144"	144"
				For Shade Widths over 90"	144"	NA	NA	144"	144"
				Railroaded					
				Maximum Width	114"	114"	114"	114"	114"
					Maximum Height				
				For Shade Widths to 102"	120"	120"	120"	120"	120"
				For Shade Widths to 108"	108"	108"	108"	108"	108"
				For Shade Widths to 114"	84"	84"	84"	84"	84"
Fiona	78"	NO	NO	Non-Railroaded					
				Maximum Width	78"	70"	70"	78"	78"
					Maximum Height				
				For Shade Widths to 66"	144"	144"	144"	144"	144"
				For Shade Widths to 70"	138"	138"	138"	138"	138"
				For Shade Widths to 72"	138"	NA	NA	138"	138"
				For Shade Widths to 78"	126"	NA	NA	126"	126"
Flocke Blackout	94"	YES	YES	Non-Railroaded					
				Maximum Width	94"	84"	84"	94"	94"
					Maximum Height				
				For Shade Widths to 66"	108"	108"	108"	108"	108"
				For Shade Widths to 72"	102"	102"	102"	102"	102"
				For Shade Widths to 84"	84"	84"	84"	84"	84"
				For Shade Widths to 90"	78"	NA	NA	78"	78"
				For Shade Widths to 94"	72"	NA	NA	72"	72"
				Railroaded					
				Maximum Width	102"	102"	102"	102"	102"
					Maximum Height				
				For Shade Widths to 66"	108"	108"	108"	108"	108"
				For Shade Widths to 72"	102"	102"	102"	102"	102"
				For Shade Widths to 84"	84"	84"	84"	84"	84"
				For Shade Widths to 90"	78"	78"	78"	78"	78"
				For Shade Widths to 96"	72"	72"	72"	72"	72"
				For Shade Widths to 102"	60"	60"	60"	60"	60"

PRODUCT SIZE SPECIFICATIONS – POWERWAND™

Minimum and Maximum Standards
Please Note: Shade sizes that are wider than the fabric roll width indicated will be made with the fabric turned width for length (railroaded). The maximum width for non-railroaded shades is the roll width unless otherwise noted.

Minimum:	Width	Height
PowerWand	19"	12"

Fabrics turned width for length will have a visible seam when fabricated longer than their maximum roll width less 10". Fabrics turned width for length may have an edge curl. This is not considered a defect in the product.

Material Name	Roll Width	Railroad Option	Splice/ Seam		PowerWand™ Shade Without Top Treament	PowerWand™ Shade with Deluxe	PowerWand™ Shade with Fabric	PowerWand™ Shade with Medium	PowerWand™ Shade with Large
Hayworth	94"	YES	YES	Non-Railroaded					
				Maximum Width	94"	84"	84"	94"	94"
					Maximum Height				
				For Shade Widths to 84"	144"	144"	144"	144"	144"
				For Shade Widths to 94"	144"	NA	NA	144"	144"
				Railroaded					
				Maximum Width	114"	114"	114"	114"	114"
					Maximum Height				
				For Shade Widths to 102"	144"	144"	144"	144"	144"
				For Shade Widths to 108"	108"	108"	108"	108"	108"
				For Shade Widths to 114"	84"	84"	84"	84"	84"
Illusion	72"	YES	NO	Non-Railroaded					
				Maximum Width	72"	60"	60"	72"	72"
					Maximum Height				
				For Shade Widths to 60"	144"	144"	144"	144"	144"
				For Shade Widths to 72"	144"	NA	NA	144"	144"
				Railroaded					
				Maximum Width	114"	114"	114"	114"	114"
					Maximum Height				
				For Shade Widths to 114"	60"	60"	60"	60"	60"
Jasper	110"	YES	YES	Non-Railroaded					
				Maximum Width	108"	100"	100"	108"	108"
					Maximum Height				
				For Shade Widths to 66"	144"	144"	144"	144"	144"
				For Shade Widths to 72"	138"	138"	138"	138"	138"
				For Shade Widths to 84"	120"	120"	120"	120"	120"
				For Shade Widths to 90"	108"	108"	108"	108"	108"
				For Shade Widths to 96"	102"	102"	102"	102"	102"
				For Shade Widths to 100"	84"	84"	84"	84"	84"
				For Shade Widths to 102"	84"	NA	NA	84"	84"
				For Shade Widths to 108"	66"	NA	NA	66"	66"
				Railroaded					
				Maximum Width	114"	114"	114"	114"	114"
					Maximum Height				
				For Shade Widths to 66"	144"	144"	144"	144"	144"
				For Shade Widths to 72"	138"	138"	138"	138"	138"
				For Shade Widths to 84"	120"	120"	120"	120"	120"
				For Shade Widths to 90"	108"	108"	108"	108"	108"
				For Shade Widths to 96"	102"	102"	102"	102"	102"
				For Shade Widths to 102"	84"	84"	84"	84"	84"
				For Shade Widths to 108"	66"	66"	66"	66"	66"
				For Shade Widths to 114"	48"	48"	48"	48"	48"
Linview	122"	YES	YES	Non-Railroaded					
				Maximum Width	108"	108"	108"	108"	108"
					Maximum Height				
				For Shade Widths to 96"	144"	144"	144"	144"	144"
				For Shade Widths to 102"	144"	144"	144"	144"	144"
				For Shade Widths to 108"	108"	108"	108"	108"	108"
				Railroaded					
				Maximum Width	108"	108"	108"	108"	108"
					Maximum Height				
				For Shade Widths to 96"	120"	120"	120"	120"	120"
				For Shade Widths to 102"	120"	120"	120"	120"	120"
				For Shade Widths to 108"	108"	108"	108"	108"	108"

PRODUCT SIZE SPECIFICATIONS – POWERWAND™

Minimum and Maximum Standards
Please Note: Shade sizes that are wider than the fabric roll width indicated will be made with the fabric turned width for length (railroaded). The maximum width for non-railroaded shades is the roll width unless otherwise noted.

Minimum:	Width	Height
PowerWand	19"	12"

Fabrics turned width for length will have a visible seam when fabricated longer than their maximum roll width less 10". Fabrics turned width for length may have an edge curl. This is not considered a defect in the product.

Material Name	Roll Width	Railroad Option	Splice/ Seam		PowerWand™ Shade Without Top Treament	PowerWand™ Shade with Deluxe	PowerWand™ Shade with Fabric	PowerWand™ Shade with Medium	PowerWand™ Shade with Large
Linview Blackout	**94"**	**NO**	**NO**	**Non-Railroaded**					
				Maximum Width	**94"**	**84"**	**84"**	**94"**	**94"**
					Maximum Height				
				For Shade Widths to 66"	144"	144"	144"	144"	144"
				For Shade Widths to 72"	138"	138"	138"	138"	138"
				For Shade Widths to 84"	120"	120"	120"	120"	120"
				For Shade Widths to 90"	108"	NA	NA	108"	108"
				For Shade Widths to 94"	102"	NA	NA	102"	102"
Montero	**94"**	**NO**	**NO**	**Non-Railroaded**					
				Maximum Width	**94"**	**84"**	**84"**	**94"**	**94"**
					Maximum Height				
				For Shade Widths to 72"	138"	138"	138"	132"	138"
				For Shade Widths to 84"	120"	120"	120"	120"	120"
				For Shade Widths to 90"	108"	NA	NA	108"	108"
				For Shade Widths to 94"	102"	NA	NA	102"	102"
Moravia	**96"**	**NO**	**NO**	**Non-Railroaded**					
				Maximum Width	**96"**	**84"**	**84"**	**96"**	**96"**
					Maximum Height				
				For Shade Widths to 84"	144"	144"	144"	138"	144"
				For Shade Widths to 96"	144"	NA	NA	138"	144"
Santa Cruz	**94"**	**NO**	**NO**	**Non-Railroaded**					
				Maximum Width	**94"**	**84"**	**84"**	**94"**	**94"**
					Maximum Height				
				For Shade Widths to 72"	138"	138"	138"	138"	138"
				For Shade Widths to 84"	120"	120"	120"	120"	120"
				For Shade Widths to 90"	108"	NA	NA	108"	108"
				For Shade Widths to 94"	102"	NA	NA	102"	102"
Santa Cruz Blackout	**94"**	**NO**	**NO**	**Non-Railroaded**					
				Maximum Width	**94"**	**84"**	**84"**	**94"**	**94"**
					Maximum Height				
				For Shade Widths to 60"	126"	126"	126"	102"	126"
				For Shade Widths to 72"	102"	102"	102"	102"	102"
				For Shade Widths to 78"	90"	90"	90"	90"	90"
				For Shade Widths to 84"	84"	84"	84"	84"	84"
				For Shade Widths to 90"	78"	NA	NA	78"	78"
				For Shade Widths to 94"	72"	NA	NA	72"	72"
Scala Blackout	**110"**	**YES**	**YES**	**Non-Railroaded**					
				Maximum Width	**102"**	**96"**	**N/A**	**102"**	**102"**
					Maximum Height				
				For Shade Widths to 66"	144"	144"	N/A	144"	144"
				For Shade Widths to 72"	138"	138"	N/A	138"	138"
				For Shade Widths to 84"	120"	120"	N/A	120"	120"
				For Shade Widths to 90"	108"	108"	N/A	108"	108"
				For Shade Widths to 96"	102"	102"	N/A	102"	102"
				For Shade Widths to 102"	84"	NA	NA	84"	84"
				Railroaded					
				Maximum Width	**102"**	**102"**	**N/A**	**102"**	**102"**
					Maximum Height				
				For Shade Widths to 66"	144"	144"	N/A	144"	144"
				For Shade Widths to 72"	138"	138"	N/A	138"	138"
				For Shade Widths to 84"	120"	120"	N/A	120"	120"
				For Shade Widths to 90"	108"	108"	N/A	108"	108"
				For Shade Widths to 96"	102"	102"	N/A	102"	102"
				For Shade Widths to 102"	84"	84"	N/A	84"	84"

PRODUCT SIZE SPECIFICATIONS – POWERWAND™

Minimum and Maximum Standards
Please Note: Shade sizes that are wider than the fabric roll width indicated will be made with the fabric turned width for length (railroaded). The maximum width for non-railroaded shades is the roll width unless otherwise noted.

Minimum:	Width	Height
PowerWand	19"	12"

Fabrics turned width for length will have a visible seam when fabricated longer than their maximum roll width less 10". Fabrics turned width for length may have an edge curl. This is not considered a defect in the product.

Material Name	Roll Width	Railroad Option	Splice/ Seam		PowerWand™ Shade Without Top Treament	PowerWand™ Shade with Deluxe	PowerWand™ Shade with Fabric	PowerWand™ Shade with Medium	PowerWand™ Shade with Large
Sheerweave 7200R	**118"**	**NO**	**NO**	**Non-Railroaded**					
				Maximum Width	**102"**	**102"**	**102"**	**102"**	**102"**
					Maximum Height				
				For Shade Widths to 66"	144"	144"	144"	114"	144"
				For Shade Widths to 72"	138"	138"	138"	114"	138"
				For Shade Widths to 78"	126"	126"	126"	114"	126"
				For Shade Widths to 84"	120"	120"	120"	114"	120"
				For Shade Widths to 90"	108"	108"	108"	108"	108"
				For Shade Widths to 96"	102"	102"	102"	102"	102"
				For Shade Widths to 102"	84"	84"	84"	84"	84"
Sheerweave 7250R	**118"**	**NO**	**NO**	**Non-Railroaded**					
				Maximum Width	**96"**	**96"**	**96"**	**96"**	**96"**
					Maximum Height				
				For Shade Widths to 96"	120"	120"	120"	120"	120"
Sheerweave 7400	**118"**	**NO**	**NO**	**Non-Railroaded**					
				Maximum Width	**96"**	**96"**	**96"**	**96"**	**96"**
					Maximum Height				
				For Shade Widths to 54"	138"	132"	132"	84"	132"
				For Shade Widths to 60"	126"	126"	126"	84"	126"
				For Shade Widths to 66"	108"	108"	108"	84"	108"
				For Shade Widths to 72"	102"	102"	102"	84"	102"
				For Shade Widths to 78"	90"	90"	90"	84"	90"
				For Shade Widths to 84"	84"	84"	84"	84"	84"
				For Shade Widths to 90"	78"	78"	78"	78"	78"
				For Shade Widths to 96"	72"	72"	72"	72"	72"
Sheerweave 7450	**118"**	**NO**	**NO**	**Non-Railroaded**					
				Maximum Width	**108"**	**108"**	**108"**	**108"**	**108"**
					Maximum Height				
				For Shade Widths to 96"	144"	144"	144"	132"	144"
				For Shade Widths to 102"	144"	144"	144"	132"	144"
				For Shade Widths to 108"	108"	108"	108"	108"	108"
Sheerweave 7500	**118"**	**NO**	**NO**	**Non-Railroaded**					
				Maximum Width	**96"**	**96"**	**N/A**	**96"**	**96"**
					Maximum Height				
				For Shade Widths to 66"	120"	120"	NA	120"	120"
				For Shade Widths to 72"	120"	120"	N/A	120"	120"
				For Shade Widths to 78"	120"	120"	N/A	120"	120"
				For Shade Widths to 84"	120"	120"	N/A	120"	120"
				For Shade Widths to 90"	108"	108"	N/A	108"	108"
				For Shade Widths to 96"	102"	102"	N/A	102"	102"
Sheerweave 7500R	**118"**	**NO**	**NO**	**Non-Railroaded**					
				Maximum Width	**102"**	**102"**	**N/A**	**102"**	**102"**
					Maximum Height				
				For Shade Widths to 66"	144"	144"	NA	144"	144"
				For Shade Widths to 72"	138"	138"	N/A	138"	138"
				For Shade Widths to 78"	126"	126"	N/A	126"	126"
				For Shade Widths to 84"	120"	120"	N/A	120"	120"
				For Shade Widths to 90"	108"	108"	N/A	108"	108"
				For Shade Widths to 96"	102"	102"	N/A	102"	102"
				For Shade Widths to 102"	84"	84"	N/A	84"	84"

PRODUCT SIZE SPECIFICATIONS – POWERWAND™

Minimum and Maximum Standards
Please Note: Shade sizes that are wider than the fabric roll width indicated will be made with the fabric turned width for length (railroaded). The maximum width for non-railroaded shades is the roll width unless otherwise noted.

Minimum:	Width	Height
PowerWand	19"	12"

Fabrics turned width for length will have a visible seam when fabricated longer than their maximum roll width less 10". Fabrics turned width for length may have an edge curl. This is not considered a defect in the product.

Material Name	Roll Width	Railroad Option	Splice/ Seam		PowerWand™ Shade Without Top Treament	PowerWand™ Shade with Deluxe	PowerWand™ Shade with Fabric	PowerWand™ Shade with Medium	PowerWand™ Shade with Large
Sheerweave 7600	118"	NO	NO	Non-Railroaded					
				Maximum Width	102"	102"	102"	102"	102"
					Maximum Height				
				For Shade Widths to 66"	144"	144"	144"	126"	144"
				For Shade Widths to 72"	138"	138"	138"	126"	138"
				For Shade Widths to 78"	126"	126"	126"	126"	126"
				For Shade Widths to 84"	120"	120"	120"	120"	120"
				For Shade Widths to 90"	108"	108"	108"	108"	108"
				For Shade Widths to 96"	102"	102"	102"	102"	102"
				For Shade Widths to 102"	84"	84"	84"	84"	84"
Sheerweave 7650	118"	NO	NO	Non-Railroaded					
				Maximum Width	108"	108"	108"	108"	108"
					Maximum Height				
				For Shade Widths to 96"	144"	144"	144"	144"	144"
				For Shade Widths to 102"	144"	144"	144"	144"	144"
				For Shade Widths to 108"	108"	108"	108"	108"	108"
Sheerweave 7700R	118"	NO	NO	Non-Railroaded					
				Maximum Width	96"	96"	96"	96"	96"
					Maximum Height				
				For Shade Widths to 54"	138"	138"	138"	96"	138"
				For Shade Widths to 60"	126"	126"	126"	96"	126"
				For Shade Widths to 66"	108"	108"	108"	96"	108"
				For Shade Widths to 72"	102"	102"	102"	96"	102"
				For Shade Widths to 78"	90"	90"	90"	90"	90"
				For Shade Widths to 84"	84"	84"	84"	84"	84"
				For Shade Widths to 90"	78"	78"	78"	78"	78"
				For Shade Widths to 96"	72"	72"	72"	72"	72"
Sheerweave 7750R	118"	NO	NO	Non-Railroaded					
				Maximum Width	98"	98"	98"	98"	98"
					Maximum Height				
				For Shade Widths to 66"	120"	120"	120"	120"	120"
				For Shade Widths to 72"	120"	120"	120"	120"	120"
				For Shade Widths to 78"	120"	120"	120"	120"	120"
				For Shade Widths to 84"	120"	120"	120"	120"	120"
				For Shade Widths to 90"	108"	108"	108"	108"	108"
				For Shade Widths to 96"	102"	102"	102"	102"	102"
				For Shade Widths to 98"	84"	84"	84"	84"	84"
Sorrento	108"	NO	NO	Non-Railroaded					
				Maximum Width	108"	96"	96"	108"	108"
					Maximum Height				
				For Shade Widths to 96"	144"	144"	144"	108"	144"
				For Shade Widths to 102"	144"	NA	NA	108"	144"
				For Shade Widths to 108"	108"	NA	NA	108"	108"
Sunscreen (SW) 7000	118"	YES	YES	Non-Railroaded					
				Maximum Width	96"	96"	96"	96"	96"
					Maximum Height				
				For Shade Widths to 60"	126"	126"	126"	96"	126"
				For Shade Widths to 72"	102"	102"	102"	96"	102"
				For Shade Widths to 78"	90"	90"	90"	90"	90"
				For Shade Widths to 84"	84"	84"	84"	84"	84"
				For Shade Widths to 90"	78"	78"	78"	78"	78"
				For Shade Widths to 96"	72"	72"	72"	72"	72"
				Railroaded					
				Maximum Width	96"	96"	96"	96"	96"
					Maximum Height				
				For Shade Widths to 60"	126"	126"	126"	96"	126"
				For Shade Widths to 72"	102"	102"	102"	96"	102"
				For Shade Widths to 78"	90"	90"	90"	90"	90"
				For Shade Widths to 84"	84"	84"	84"	84"	84"
				For Shade Widths to 90"	78"	78"	78"	78"	78"
				For Shade Widths to 96"	72"	72"	72"	72"	72"

PRODUCT SIZE SPECIFICATIONS – POWERWAND™

Minimum and Maximum Standards

Please Note: Shade sizes that are wider than the fabric roll width indicated will be made with the fabric turned width for length (railroaded). The maximum width for non-railroaded shades is the roll width unless otherwise noted.

Minimum:	Width	Height
PowerWand	19"	12"

Fabrics turned width for length will have a visible seam when fabricated longer than their maximum roll width less 10". Fabrics turned width for length may have an edge curl. This is not considered a defect in the product.

Material Name	Roll Width	Railroad Option	Splice/ Seam		PowerWand™ Shade Without Top Treament	PowerWand™ Shade with Deluxe	PowerWand™ Shade with Fabric	PowerWand™ Shade with Medium	PowerWand™ Shade with Large
Tundra	**94"**	**NO**	**NO**	**Non-Railroaded**					
				Maximum Width	**94"**	**84"**	**84"**	**94"**	**94"**
					Maximum Height				
				For Shade Widths to 84"	144"	144"	144"	144"	144"
				For Shade Widths to 90"	144"	N/A	N/A	144"	144"
				For Shade Widths to 94"	144"	N/A	N/A	144"	144"
Tundra Blackout	**94"**	**NO**	**NO**	**Non-Railroaded**					
				Maximum Width	**94"**	**84"**	**84"**	**94"**	**94"**
					Maximum Height				
				For Shade Widths to 66"	120"	120"	120"	120"	120"
				For Shade Widths to 72"	120"	120"	120"	120"	120"
				For Shade Widths to 78"	120"	120"	120"	120"	120"
				For Shade Widths to 84"	120"	120"	120"	120"	120"
				For Shade Widths to 90"	108"	N/A	N/A	108"	108"
				For Shade Widths to 94"	102"	N/A	N/A	102"	102"
Uptown *(R79_02)*	**78"**	**YES**	**NO**	**Non-Railroaded**					
				Maximum Width	**78"**	**66¨**	**66"**	**78"**	**78"**
					Maximum Height				
				For Shade Widths to 66"	144"	144"	144"	144"	144"
				For Shade Widths to 78"	144"	NA	NA	144"	144"
				Railroaded					
				Maximum Width	**114"**	**114¨**	**114"**	**114"**	**114"**
					Maximum Height				
				For Shade Widths to 114"	66"	66"	66"	66"	66"
Uptown Room Darkening *(R79_01)*	**78"**	**YES**	**NO**	**Non-Railroaded**					
				Maximum Width	**78"**	**66¨**	**66"**	**78"**	**78"**
					Maximum Height				
				For Shade Widths to 66"	144"	144"	144"	144"	144"
				For Shade Widths to 72"	138"	NA	NA	138"	138"
				For Shade Widths to 78"	126"	NA	NA	126"	126"
				Railroaded					
				Maximum Width	**108"**	**108¨**	**108"**	**108"**	**108"**
					Maximum Height				
				For Shade Widths to 108"	66"	66"	66"	66"	66"
World Textures 1	**78"**	**YES**	**YES**	**Non-Railroaded**					
				Maximum Width	**78"**	**66"**	**66"**	**78"**	**78"**
					Maximum Height				
				For Shade Widths to 66"	144"	144"	144"	126"	144"
				For Shade Widths to 72"	138"	NA	NA	126"	138"
				For Shade Widths to 78"	126"	NA	NA	126"	126"
				Railroaded					
				Maximum Width	**102"**	**102"**	**102"**	**102"**	**102"**
					Maximum Height				
				For Shade Widths to 66"	144"	144"	144"	126"	144"
				For Shade Widths to 72"	138"	138"	138"	126"	138"
				For Shade Widths to 78"	126"	126"	126"	126"	126"
				For Shade Widths to 84"	120"	120"	120"	108"	120"
				For Shade Widths to 90"	108"	108"	108"	108"	108"
				For Shade Widths to 96"	102"	102"	102"	102"	102"
				For Shade Widths to 102"	84"	84"	84"	84"	84"
World Textures 1 Blackout	**78"**	**YES**	**YES**	**Non-Railroaded**					
				Maximum Width	**78"**	**66"**	**66"**	**78"**	**78"**
					Maximum Height				
				For Shade Widths to 66"	144"	138"	138"	108"	144"
				For Shade Widths to 72"	138"	NA	NA	108"	138"
				For Shade Widths to 78"	126"	NA	NA	108"	126"
				Railroaded					
				Maximum Width	**102"**	**102"**	**102"**	**102"**	**102"**
					Maximum Height				
				For Shade Widths to 66"	144"	144"	144"	108"	144"
				For Shade Widths to 72"	138"	138"	138"	108"	138"
				For Shade Widths to 78"	126"	126"	126"	108"	126"
				For Shade Widths to 84"	120"	120"	120"	108"	120"
				For Shade Widths to 90"	108"	108"	108"	108"	108"
				For Shade Widths to 96"	102"	102"	102"	102"	102"
				For Shade Widths to 102"	84"	84"	84"	84"	84"

PRODUCT SIZE SPECIFICATIONS – POWERWAND™

Minimum and Maximum Standards
Please Note: Shade sizes that are wider than the fabric roll width indicated will be made with the fabric turned width for length (railroaded). The maximum width for non-railroaded shades is the roll width unless otherwise noted.

Minimum:	Width	Height
PowerWand	19"	12"

Fabrics turned width for length will have a visible seam when fabricated longer than their maximum roll width less 10". Fabrics turned width for length may have an edge curl. This is not considered a defect in the product.

Material Name	Roll Width	Railroad Option	Splice/ Seam		PowerWand™ Shade Without Top Treament	PowerWand™ Shade with Deluxe	PowerWand™ Shade with Fabric	PowerWand™ Shade with Medium	PowerWand™ Shade with Large
World Textures 2	80"	YES	YES	Non-Railroaded					
				Maximum Width	80"	70"	70"	80"	80"
					Maximum Height				
				For Shade Widths to 70"	138"	138"	138"	84"	138"
				For Shade Widths to 72"	138"	NA	NA	84"	138"
				For Shade Widths to 80"	120"	NA	NA	84"	120"
				Railroaded					
				Maximum Width	102"	102"	102"	102"	102"
					Maximum Height				
				For Shade Widths to 66"	144"	138"	138"	84"	138"
				For Shade Widths to 72"	138"	138"	138"	84"	138"
				For Shade Widths to 84"	120"	120"	120"	84"	120"
				For Shade Widths to 90"	108"	108"	108"	84"	108"
				For Shade Widths to 96"	102"	102"	102"	84"	102"
				For Shade Widths to 102"	84"	84"	84"	84"	84"
World Textures 2 Blackout	80"	YES	YES	Non-Railroaded					
				Maximum Width	80"	70"	70"	80"	80"
					Maximum Height				
				For Shade Widths to 66"	144"	144"	144"	144"	144"
				For Shade Widths to 70"	138"	138"	138"	138"	138"
				For Shade Widths to 72"	138"	NA	NA	138"	138"
				For Shade Widths to 80"	120"	NA	NA	120"	120"
				Railroaded					
				Maximum Width	102"	102"	102"	102"	102"
					Maximum Height				
				For Shade Widths to 66"	144"	144"	144"	144"	144"
				For Shade Widths to 72"	138"	138"	138"	138"	138"
				For Shade Widths to 84"	120"	120"	120"	120"	120"
				For Shade Widths to 90"	108"	108"	108"	108"	108"
				For Shade Widths to 96"	102"	102"	102"	102"	102"
				For Shade Widths to 102"	84"	84"	84"	84"	84"

PRODUCT SIZE SPECIFICATIONS – SIMPLICITY

Minimum and Maximum Standards
Please Note: Shade sizes that are wider than the fabric roll width indicated will be made with the fabric turned width for length (railroaded). The maximum width for non-railroaded shades is the roll width unless otherwise noted.

Minimum:	Width	Height
Simplicity	19"	12"

Fabrics turned width for length will have a visible seam when fabricated longer than their maximum roll width less 10". Fabrics turned width for length may have an edge curl. This is not considered a defect in the product.

Material Name	Roll Width	Railroad Option	Splice/ Seam		Motorized Shade Without Top Treament	Motorized Shade with Deluxe Valance	Motorized Shade with Fabric Valance	Motorized Shade with Medium Cassette	Motorized Shade with Large Cassette
1% E Screen	122"	YES	YES	Non-Railroaded					
				Maximum Width	108"	108"	108"	108"	108"
					Maximum Height				
				For Shade Widths to 84"	144"	144"	144"	138"	144"
				For Shade Widths to 90"	138"	138"	138"	138"	138"
				For Shade Widths to 96"	108"	108"	108"	108"	108"
				For Shade Widths to 102"	84"	84"	84"	84"	84"
				For Shade Widths over 102"	66"	66"	66"	66"	66"
				Railroaded					
				Maximum Width	108"	108"	108"	108"	108"
					Maximum Height				
				For Shade Widths to 84"	144"	144"	144"	138"	144"
				For Shade Widths to 90"	138"	138"	138"	138"	138"
				For Shade Widths to 96"	108"	108"	108"	108"	108"
				For Shade Widths to 102"	84"	84"	84"	84"	84"
				For Shade Widths over 102"	66"	66"	66"	66"	66"
1% Sheerweave 2500	126"	YES	YES	Non-Railroaded					
				Maximum Width	102"	102"	102"	102"	102"
					Maximum Height				
				For Shade Width to 78"	144"	144"	144"	114"	144"
				For Shade Width to 84"	126"	126"	126"	114"	126"
				For Shade Width to 90"	96"	96"	96"	96"	96"
				For Shade Width to 96"	78"	78"	78"	78"	78"
				For Shade Widths over 96"	60"	60"	60"	60"	60"
				Railroaded					
				Maximum Width	102"	102"	102"	102"	102"
					Maximum Height				
				For Shade Width to 78"	144"	144"	144"	114"	144"
				For Shade Width to 84"	126"	126"	126"	114"	126"
				For Shade Width to 90"	96"	96"	96"	96"	96"
				For Shade Width to 96"	78"	78"	78"	78"	78"
				For Shade Widths over 96"	60"	60"	60"	60"	60"
1% Sheerweave 2701	126"	YES	YES	Non-Railroaded					
				Maximum Width	102"	102"	102"	102"	102"
					Maximum Height				
				For Shade Width to 72"	144"	144"	144"	138"	144"
				For Shade Width to 84"	126"	126"	126"	126"	126"
				For Shade Width to 90"	96"	96"	96"	96"	96"
				For Shade Width to 96"	78"	78"	78"	78"	78"
				For Shade Widths over 96"	60"	60"	60"	60"	60"
				Railroaded					
				Maximum Width	102"	102"	102"	102"	102"
					Maximum Height				
				For Shade Width to 72"	144"	144"	144"	138"	144"
				For Shade Width to 84"	126"	126"	126"	126"	126"
				For Shade Width to 90"	96"	96"	96"	96"	96"
				For Shade Width to 96"	78"	78"	78"	78"	78"
				For Shade Widths over 96"	60"	60"	60"	60"	60"
1% Sheerweave 4901	98"	NO	NO	Non-Railroaded					
				Maximum Width	96"	88"	88"	96"	96"
					Maximum Height				
				For Shade Widths to 54"	144"	144"	144"	96"	144"
				For Shade Widths to 60"	144"	144"	144"	96"	144"
				For Shade Widths to 66"	144"	144"	144"	96"	144"
				For Shade Widths to 72"	144"	144"	144"	96"	144"
				For Shade Widths to 78"	144"	144"	144"	96"	144"
				For Shade Widths to 84"	126"	126"	126"	96"	126"
				For Shade Widths to 88"	96"	96"	96"	96"	96"
				For Shade Widths to 90"	96"	N/A	N/A	96"	96"
				For Shade Widths to 96"	78"	N/A	N/A	78"	78"
1% Sheerweave 5000	98"	NO	NO	Non-Railroaded					
				Maximum Width	96"	88"	88"	96"	96"
					Maximum Height				
				For Shade Widths to 78"	144"	78"	78"	48"	78"
				For Shade Widths to 84"	126"	78"	78"	48"	78"
				For Shade Widths to 88"	96"	78"	78"	48"	78"
				For Shade Widths to 90"	96"	N/A	N/A	48"	78"
				For Shade Widths to 96"	78"	N/A	N/A	48"	78"

PRODUCT SIZE SPECIFICATIONS – SIMPLICITY

Minimum and Maximum Standards
Please Note: Shade sizes that are wider than the fabric roll width indicated will be made with the fabric turned width for length (railroaded). The maximum width for non-railroaded shades is the roll width unless otherwise noted.

Minimum:	Width	Height
Simplicity	19"	12"

Fabrics turned width for length will have a visible seam when fabricated longer than their maximum roll width less 10". Fabrics turned width for length may have an edge curl. This is not considered a defect in the product.

Material Name	Roll Width	Railroad Option	Splice/ Seam		Motorized Shade Without Top Treament	Motorized Shade with Deluxe Valance	Motorized Shade with Fabric Valance	Motorized Shade with Medium Cassette	Motorized Shade with Large Cassette
1% Toka	118"	YES	YES	Non-Railroaded					
				Maximum Width	102"	102"	102"	102"	102"
					Maximum Height				
				For Shade Width to 72"	144"	144"	144"	96"	144"
				For Shade Width to 84"	126"	126"	126"	96"	126"
				For Shade Width to 90"	96¨	96¨	96¨	96"	96¨
				For Shade Width to 96"	78¨	78¨	78¨	78¨	78¨
				For Shade Widths over 96"	60¨	60¨	60¨	60¨	60¨
				Railroaded					
				Maximum Width	102"	102"	102"	102"	102"
					Maximum Height				
				For Shade Width to 72"	144"	144"	144"	96"	144"
				For Shade Width to 84"	126"	126"	126"	96"	126"
				For Shade Width to 90"	96¨	96¨	96¨	96"	96¨
				For Shade Width to 96"	78¨	78¨	78¨	78¨	78¨
				For Shade Widths over 96"	60¨	60¨	60¨	60¨	60¨
3% E Screen	122"	YES	YES	Non-Railroaded					
				108"	108"	108"	108"	108"	108"
					Maximum Height				
				For Shade Widths to 84"	144"	144"	144"	144"	144"
				For Shade Widths to 90"	138"	138"	138"	138"	138"
				For Shade Widths to 96"	108"	108"	108"	108"	108"
				For Shade Widths to 102"	84"	84"	84"	84"	84"
				For Shade Widths over 102"	66"	66"	66"	66"	66"
				Railroaded					
				Maximum Width	108"	108"	108"	108"	108"
					Maximum Height				
				For Shade Widths to 84"	144"	144"	144"	144"	144"
				For Shade Widths to 90"	138"	138"	138"	138"	138"
				For Shade Widths to 96"	108"	108"	108"	108"	108"
				For Shade Widths to 102"	84"	84"	84"	84"	84"
				For Shade Widths over 102"	66"	66"	66"	66"	66"
3% M Screen	122"	YES	YES	Non-Railroaded					
				Maximum Width	108"	108"	108"	108"	108"
					Maximum Height				
				For Shade Widths to 84"	144"	144"	144"	126"	144"
				For Shade Widths to 90"	138"	138"	138"	126"	138"
				For Shade Widths to 96"	108"	108"	108"	108"	108"
				For Shade Widths over 96"	66"	66"	66"	66"	66"
				Railroaded					
				Maximum Width	108"	108"	108"	108"	108"
					Maximum Height				
				For Shade Widths to 84"	144"	144"	144"	126"	144"
				For Shade Widths to 90"	138"	138"	138"	126"	138"
				For Shade Widths to 96"	108"	108"	108"	108"	108"
				For Shade Widths over 96"	66"	66"	66"	66"	66"

PRODUCT SIZE SPECIFICATIONS – SIMPLICITY

Minimum and Maximum Standards
Please Note: Shade sizes that are wider than the fabric roll width indicated will be made with the fabric turned width for length (railroaded). The maximum width for non-railroaded shades is the roll width unless otherwise noted.

Minimum:	Width	Height
Simplicity	19"	12"

Fabrics turned width for length will have a visible seam when fabricated longer than their maximum roll width less 10". Fabrics turned width for length may have an edge curl. This is not considered a defect in the product.

Material Name	Roll Width	Railroad Option	Splice/ Seam		Motorized Shade Without Top Treament	Motorized Shade with Deluxe Valance	Motorized Shade with Fabric Valance	Motorized Shade with Medium Cassette	Motorized Shade with Large Cassette
3% Sheerweave 2410	126"	YES	YES	**Non-Railroaded**					
				Maximum Width	102"	102"	102"	102"	102"
					Maximum Height				
				For Shade Widths to 72"	144"	144"	144"	138"	144"
				For Shade Widths to 84"	126"	126"	126"	126"	126"
				For Shade Widths to 90"	96"	96"	96"	96"	96"
				For Shade Widths to 96"	78"	78"	78"	78"	78"
				For Shade Widths over 96"	60"	60"	60"	60"	60"
				Railroaded					
				Maximum Width	102"	102"	102"	102"	102"
					Maximum Height				
				For Shade Widths to 72"	144"	144"	144"	138"	144"
				For Shade Widths to 84"	126"	126"	126"	126"	126"
				For Shade Widths to 90"	96"	96"	96"	96"	96"
				For Shade Widths to 96"	78"	78"	78"	78"	78"
				For Shade Widths over 96"	60"	60"	60"	60"	60"
3% Sheerweave 2703	126"	YES	YES	**Non-Railroaded**					
				Maximum Width	96"	96"	96"	96"	96"
					Maximum Height				
				For Shade Widths to 54"	144"	144"	144"	96"	144"
				For Shade Widths to 60"	144"	144"	144"	96"	144"
				For Shade Widths to 66"	144"	144"	144"	96"	144"
				For Shade Widths to 72"	144"	144"	144"	96"	144"
				For Shade Widths to 78"	144"	144"	144"	96"	144"
				For Shade Widths to 84"	126"	126"	126"	96"	126"
				For Shade Widths to 90"	96"	96"	96"	96"	96"
				For Shade Widths to 96"	78"	78"	78"	78"	78"
				Railroaded					
				Maximum Width	96"	96"	96"	96"	96"
					Maximum Height				
				For Shade Widths to 54"	144"	144"	144"	96"	144"
				For Shade Widths to 60"	144"	144"	144"	96"	144"
				For Shade Widths to 66"	144"	144"	144"	96"	144"
				For Shade Widths to 72"	144"	144"	144"	96"	144"
				For Shade Widths to 78"	144"	144"	144"	96"	144"
				For Shade Widths to 84"	126"	126"	126"	96"	126"
				For Shade Widths to 90"	96"	96"	96"	96"	96"
				For Shade Widths to 96"	78"	78"	78"	78"	78"
3% Sheerweave 4400	126"	YES	YES	**Non-Railroaded**					
				Maximum Width	102"	102"	102"	102"	102"
					Maximum Height				
				For Shade Widths to 78"	144"	120"	120"	78"	120"
				For Shade Widths to 84"	126"	120"	120"	78"	120"
				For Shade Widths to 90"	96"	96"	96"	78"	96"
				For Shade Widths to 96"	78"	78"	78"	78"	78"
				For Shade Widths over 96"	60"	60"	60"	60"	60"
				Railroaded					
				Maximum Width	102"	102"	102"	102"	102"
					Maximum Height				
				For Shade Widths to 78"	144"	120"	120"	78"	120"
				For Shade Widths to 84"	126"	120"	120"	78"	120"
				For Shade Widths to 90"	96"	96"	96"	78"	96"
				For Shade Widths to 96"	78"	78"	78"	78"	78"
				For Shade Widths over 96"	60"	60"	60"	60"	60"
3% Sheerweave 4600	126"	YES	YES	**Non-Railroaded**					
				Maximum Width	96"	96"	96"	96"	96"
					Maximum Height				
				For Shade Widths to 54"	120"	120"	120"	84"	120"
				For Shade Widths to 60"	120"	120"	120"	84"	120"
				For Shade Widths to 66"	120"	120"	120"	84"	120"
				For Shade Widths to 72"	120"	120"	120"	84"	120"
				For Shade Widths to 78"	120"	120"	120"	84"	120"
				For Shade Widths to 84"	120"	120"	120"	84"	120"
				For Shade Widths to 90"	96"	96"	96"	84"	96"
				For Shade Widths to 96"	78"	78"	78"	78"	78"
				Railroaded					
				Maximum Width	96"	96"	96"	96"	96"
					Maximum Height				
				For Shade Widths to 54"	120"	120"	120"	84"	120"
				For Shade Widths to 60"	120"	120"	120"	84"	120"
				For Shade Widths to 66"	120"	120"	120"	84"	120"
				For Shade Widths to 72"	120"	120"	120"	84"	120"
				For Shade Widths to 78"	120"	120"	120"	84"	120"
				For Shade Widths to 84"	120"	120"	120"	84"	120"
				For Shade Widths to 90"	96"	96"	96"	84"	96"
				For Shade Widths to 96"	78"	78"	78"	78"	78"

PRODUCT SIZE SPECIFICATIONS – SIMPLICITY

Minimum and Maximum Standards
Please Note: Shade sizes that are wider than the fabric roll width indicated will be made with the fabric turned width for length (railroaded). The maximum width for non-railroaded shades is the roll width unless otherwise noted.

Minimum:	Width	Height
Simplicity	19"	12"

Fabrics turned width for length will have a visible seam when fabricated longer than their maximum roll width less 10". Fabrics turned width for length may have an edge curl. This is not considered a defect in the product.

Material Name	Roll Width	Railroad Option	Splice/ Seam		Motorized Shade Without Top Treament	Motorized Shade with Deluxe Valance	Motorized Shade with Fabric Valance	Motorized Shade with Medium Cassette	Motorized Shade with Large Cassette
3% Sheerweave 4903	**98"**	**NO**	**NO**	**Non-Railroaded**					
				Maximum Width	**96"**	**88"**	**88"**	**96"**	**96"**
					Maximum Height				
				For Shade Widths to 54"	144"	144"	144"	90"	144"
				For Shade Widths to 60"	144"	144"	144"	90"	144"
				For Shade Widths to 66"	144"	144"	144"	90"	144"
				For Shade Widths to 72"	144"	144"	144"	90"	144"
				For Shade Widths to 78"	144"	144"	144"	90"	144"
				For Shade Widths to 84"	126"	126"	126"	90"	126"
				For Shade Widths to 88"	96"	96"	96"	90"	96"
				For Shade Widths to 90"	96"	N/A	N/A	90"	96"
				For Shade Widths to 96"	78"	N/A	N/A	78"	78"
3% Sheerweave 5000 *(R07_02, 04, 05, 07, 10)*	**98"**	**NO**	**NO**	**Non-Railroaded**					
				Maximum Width	**98"**	**86"**	**86"**	**98"**	**98"**
					Maximum Height				
				For Shade Widths to 78"	144"	72"	72"	42"	72"
				For Shade Widths to 84"	126"	72"	72"	42"	72"
				For Shade Widths to 86"	96"	72"	72"	42"	72"
				For Shade Widths to 90"	96"	N/A	N/A	42"	72"
				For Shade Widths over 90"	60"	N/A	N/A	42"	60"
3% Sheerweave 5000 *(R07_R11, R89, R90, R93, U10, U11)*	**98"**	**NO**	**NO**	**Non-Railroaded**					
				Maximum Width	**96"**	**88"**	**88"**	**96"**	**96"**
					Maximum Height				
				For Shade Widths to 54"	144"	78"	78"	48"	78"
				For Shade Widths to 60"	144"	78"	78"	48"	78"
				For Shade Widths to 66"	144"	78"	78"	48"	78"
				For Shade Widths to 72"	144"	78"	78"	48"	78"
				For Shade Widths to 78"	144"	78"	78"	48"	78"
				For Shade Widths to 84"	126"	78"	78"	48"	78"
				For Shade Widths to 88"	96"	78"	78"	48"	78"
				For Shade Widths to 90"	96"	NA	NA	48"	78"
				For Shade Widths to 96"	78"	NA	NA	48"	78"
3% T Screen	**98"**	**YES**	**NO**	**Non-Railroaded**					
				Maximum Width	**98"**	**90"**	**90"**	**98"**	**98"**
					Maximum Height				
				For Shade Widths to 84"	144"	144"	144"	108"	144"
				For Shade Widths to 90"	138"	138"	138"	108"	138"
				For Shade Widths to 96"	108"	N/A	N/A	108"	108"
				For Shade Widths over 96"	84"	N/A	N/A	84"	84"
				Railroaded					
				Maximum Width	**108"**	**108"**	**108"**	**108"**	**108"**
					Maximum Height				
				For Shade Widths to 96"	86"	86"	86"	86"	86"
				For Shade Widths over 96"	66"	66"	66"	66"	66"
4% S Screen	**122"**	**NO**	**NO**	**Non-Railroaded**					
				Maximum Width	**102"**	**102"**	**102"**	**102"**	**102"**
					Maximum Height				
				For Shade Widths to 72"	144"	120"	120"	72"	120"
				For Shade Widths to 84"	126"	120"	120"	72"	120"
				For Shade Widths to 90"	96"	96"	96"	72"	96"
				For Shade Widths to 96"	78"	78"	78"	72"	78"
				For Shade Widths over 96"	60"	60"	60"	60"	60"
4% Silver Screen	**94"**	**YES**	**YES**	**Non-Railroaded**					
				Maximum Width	**94"**	**84"**	**84"**	**94"**	**94"**
					Maximum Height				
				For Shade Widths to 84"	144"	144"	144"	144"	144"
				For Shade Widths to 90"	138"	N/A	N/A	138"	138"
				For Shade Widths over 90"	108"	N/A	N/A	108"	108"
				Railroaded					
				Maximum Width	**108"**	**108"**	**108"**	**108"**	**108"**
					Maximum Height				
				For Shade Widths to 96"	108"	108"	108"	108"	108"
				For Shade Widths to 102"	84"	84"	84"	84"	84"
				For Shade Widths over 102"	66"	66"	66"	66"	66"

PRODUCT SIZE SPECIFICATIONS – SIMPLICITY

Minimum and Maximum Standards
Please Note: Shade sizes that are wider than the fabric roll width indicated will be made with the fabric turned width for length (railroaded). The maximum width for non-railroaded shades is the roll width unless otherwise noted.

Minimum:	Width	Height
Simplicity	19"	12"

Fabrics turned width for length will have a visible seam when fabricated longer than their maximum roll width less 10". Fabrics turned width for length may have an edge curl. This is not considered a defect in the product.

Material Name	Roll Width	Railroad Option	Splice/ Seam		Motorized Shade Without Top Treament	Motorized Shade with Deluxe Valance	Motorized Shade with Fabric Valance	Motorized Shade with Medium Cassette	Motorized Shade with Large Cassette
5% E Screen	122"	YES	YES	Non-Railroaded					
				Maximum Width	102"	102"	102"	102"	102"
					Maximum Height				
				For Shade Widths to 84"	144"	144"	144"	144"	144"
				For Shade Widths to 90"	138"	138"	138"	138"	138"
				For Shade Widths to 96"	108"	108"	108"	108"	108"
				For Shade Widths to 102"	84"	84"	84"	84"	84"
				Railroaded					
				Maximum Width	102"	102"	102"	102"	102"
					Maximum Height				
				For Shade Widths to 84"	144"	144"	144"	144"	144"
				For Shade Widths to 90"	138"	138"	138"	138"	138"
				For Shade Widths to 96"	108"	108"	108"	108"	108"
				For Shade Widths to 102"	84"	84"	84"	84"	84"
5% M Screen Deco	98"	YES	YES	Non-Railroaded					
				Maximum Width	98"	90"	90"	98"	98"
					Maximum Height				
				For Shade Widths to 84"	144"	144"	144"	126"	144"
				For Shade Widths to 90"	138"	138"	138"	126"	138"
				For Shade Widths to 96"	108"	N/A	N/A	108"	108"
				For Shade Widths to 98"	84"	N/A	N/A	84"	84"
				Railroaded					
				Maximum Width	102"	102"	102"	102"	102"
					Maximum Height				
				For Shade Widths to 84"	144"	144"	144"	126"	144"
				For Shade Widths to 90"	138"	138"	138"	126"	138"
				For Shade Widths to 96"	108"	108"	108"	108"	108"
				For Shade Widths to 102"	84"	84"	84"	84"	84"
5% Sheerweave 2000	126"	NO	NO	Non-Railroaded					
				Maximum Width	96"	96"	96"	96"	96"
					Maximum Height				
				For Shade Widths to 54"	144"	144"	144"	132"	144"
				For Shade Widths to 60"	144"	144"	144"	126"	144"
				For Shade Widths to 66"	144"	144"	144"	126"	144"
				For Shade Widths to 72"	144"	144"	144"	126"	144"
				For Shade Widths to 78"	144"	144"	144"	126"	144"
				For Shade Widths to 84"	126"	126"	126"	126"	126"
				For Shade Widths to 90"	96"	96"	96"	96"	96"
				For Shade Widths to 96"	78"	78"	78"	78"	78"
				Railroaded					
				Maximum Width	96"	96"	96"	96"	96"
					Maximum Height				
				For Shade Widths to 54"	120"	120"	120"	120"	120"
				For Shade Widths to 60"	120"	120"	120"	120"	120"
				For Shade Widths to 66"	120"	120"	120"	120"	120"
				For Shade Widths to 72"	120"	120"	120"	120"	120"
				For Shade Widths to 78"	120"	120"	120"	120"	120"
				For Shade Widths to 84"	120"	120"	120"	120"	120"
				For Shade Widths to 90"	96"	96"	96"	96"	96"
				For Shade Widths to 96"	78"	78"	78"	78"	78"
5% Sheerweave 2705	126"	NO	NO	Non-Railroaded					
				Maximum Width	98"	98"	N/A	98"	98"
					Maximum Height				
				For Shade Widths to 66"	120"	120"	N/A	102"	120"
				For Shade Widths to 72"	120"	120"	N/A	102"	120"
				For Shade Widths to 78"	120"	120"	N/A	102"	120"
				For Shade Widths to 84"	120"	120"	N/A	102"	120"
				For Shade Widths to 90"	120"	120"	N/A	102"	120"
				For Shade Widths to 96"	108"	108"	N/A	102"	108"
				For Shade Widths over 96"	84"	84"	NA	84"	84"

PRODUCT SIZE SPECIFICATIONS – SIMPLICITY

Minimum and Maximum Standards
Please Note: Shade sizes that are wider than the fabric roll width indicated will be made with the fabric turned width for length (railroaded). The maximum width for non-railroaded shades is the roll width unless otherwise noted.

Minimum:	Width	Height
Simplicity	19"	12"

Fabrics turned width for length will have a visible seam when fabricated longer than their maximum roll width less 10". Fabrics turned width for length may have an edge curl. This is not considered a defect in the product.

Material Name	Roll Width	Railroad Option	Splice/ Seam		Motorized Shade Without Top Treament	Motorized Shade with Deluxe Valance	Motorized Shade with Fabric Valance	Motorized Shade with Medium Cassette	Motorized Shade with Large Cassette
5% Sheerweave 2390	126"	YES	YES	Non-Railroaded					
				Maximum Width	102"	102"	102"	102"	102"
					Maximum Height				
				For Shade Widths to 84"	144"	144"	144"	144"	144"
				For Shade Widths to 90"	138"	138"	138"	138"	138"
				For Shade Widths to 96"	108"	108"	108"	108"	108"
				For Shade Widths to 102"	84"	84"	84"	84"	84"
				Railroaded					
				Maximum Width	102"	102"	102"	102"	102"
					Maximum Height				
				For Shade Widths to 84"	144"	144"	144"	144"	144"
				For Shade Widths to 90"	138"	138"	138"	138"	138"
				For Shade Widths to 96"	108"	108"	108"	108"	108"
				For Shade Widths to 102"	84"	84"	84"	84"	84"
5% Sheerweave 4000	126"	YES	YES	Non-Railroaded					
				Maximum Width	102"	102"	102"	102"	102"
					Maximum Height				
				For Shade Widths to 78"	144"	138"	138"	90"	138"
				For Shade Widths to 84"	126"	126"	126"	90"	126"
				For Shade Widths to 90"	96"	96"	96"	90"	96"
				For Shade Widths to 96"	78"	78"	78"	90"	78"
				For Shade Widths over 96"	60"	60"	60"	60"	60"
				Railroaded					
				Maximum Width	102"	102"	102"	102"	102"
					Maximum Height				
				For Shade Widths to 78"	144"	138"	138"	90"	138"
				For Shade Widths to 84"	126"	126"	126"	90"	126"
				For Shade Widths to 90"	96"	96"	96"	90"	96"
				For Shade Widths to 96"	78"	78"	78"	90"	78"
				For Shade Widths over 96"	60"	60"	60"	60"	60"
5% Sheerweave 4500	126"	NO	NO	Non-Railroaded					
				Maximum Width	96"	96"	96"	96"	96"
					Maximum Height				
				For Shade Widths to 54"	144"	144"	144"	108"	144"
				For Shade Widths to 60"	144"	144"	144"	108"	144"
				For Shade Widths to 66"	144"	144"	144"	108"	144"
				For Shade Widths to 72"	144"	144"	144"	108"	144"
				For Shade Widths to 78"	144"	144"	144"	108"	144"
				For Shade Widths to 84"	126"	126"	126"	108"	126"
				For Shade Widths to 90"	96"	96"	96"	96"	96"
				For Shade Widths to 96"	78"	78"	78"	72"	78"
				Railroaded					
				Maximum Width	96"	96"	96"	96"	96"
					Maximum Height				
				For Shade Widths to 54"	144"	144"	144"	108"	144"
				For Shade Widths to 60"	144"	144"	144"	108"	144"
				For Shade Widths to 66"	144"	144"	144"	108"	144"
				For Shade Widths to 72"	144"	144"	144"	108"	144"
				For Shade Widths to 78"	144"	144"	144"	108"	144"
				For Shade Widths to 84"	126"	126"	126"	108"	126"
				For Shade Widths to 90"	96"	96"	96"	96"	96"
				For Shade Widths to 96"	78"	78"	78"	72"	78"

PRODUCT SIZE SPECIFICATIONS – SIMPLICITY

Minimum and Maximum Standards

Please Note: Shade sizes that are wider than the fabric roll width indicated will be made with the fabric turned width for length (railroaded). The maximum width for non-railroaded shades is the roll width unless otherwise noted.

Minimum:	Width	Height
Simplicity	19"	12"

Fabrics turned width for length will have a visible seam when fabricated longer than their maximum roll width less 10". Fabrics turned width for length may have an edge curl. This is not considered a defect in the product.

Material Name	Roll Width	Railroad Option	Splice/ Seam		Motorized Shade Without Top Treament	Motorized Shade with Deluxe Valance	Motorized Shade with Fabric Valance	Motorized Shade with Medium Cassette	Motorized Shade with Large Cassette
5% Sheerweave 5000 *(R10_01, 03, 06, 07, 09, 10, 11, 12, 13,14, 15, 16, 17, 18, 19, 20, 21)*	98"	NO	NO	**Non-Railroaded**					
				Maximum Width	98"	86"	86"	98"	98"
					Maximum Height				
				For Shade Widths to 72"	144"	90"	90"	54"	90"
				For Shade Widths to 84"	126"	90"	90"	54"	90"
				For Shade Widths to 86"	96"	90"	90"	54"	90"
				For Shade Widths to 90"	96"	N/A	N/A	54"	90"
				For Shade Widths over 90"	60"	N/A	N/A	54"	66"
5% Sheerweave 5000 *(R10_Q51, S77, S84)*	98"	NO	NO	**Non-Railroaded**					
				Maximum Width	96"	88"	88"	96"	96"
					Maximum Height				
				For Shade Widths to 54"	144"	90"	90"	54"	90"
				For Shade Widths to 60"	144"	90"	90"	54"	90"
				For Shade Widths to 66"	144"	90"	90"	54"	90"
				For Shade Widths to 72"	144"	90"	90"	54"	90"
				For Shade Widths to 78"	144"	90"	90"	54"	90"
				For Shade Widths to 84"	126"	90"	90"	54"	90"
				For Shade Widths to 88"	96"	90"	90"	54"	90"
				For Shade Widths to 90"	96"	NA	NA	54"	90"
				For Shade Widths to 96"	78"	NA	NA	54"	78"
5% Sheerweave 5000 *(R10_Q43, S82)*	98"	NO	NO	**Non-Railroaded**					
				Maximum Width	96"	88"	88"	96"	96"
					Maximum Height				
				For Shade Widths to 54"	144"	102"	102"	66"	102"
				For Shade Widths to 60"	144"	102"	102"	66"	102"
				For Shade Widths to 66"	144"	102"	102"	66"	102"
				For Shade Widths to 72"	144"	102"	102"	66"	102"
				For Shade Widths to 78"	144"	102"	102"	66"	102"
				For Shade Widths to 84"	126"	102"	102"	66"	102"
				For Shade Widths to 88"	96"	96"	96"	66"	96"
				For Shade Widths to 90"	96"	NA	NA	66"	96"
				For Shade Widths to 96"	78"	NA	NA	66"	78"
7% Global Screen	118"	YES	YES	**Non-Railroaded**					
				Maximum Width	108"	108"	108"	108"	108"
					Maximum Height				
				For Shade Widths to 84"	144"	144"	144"	120"	144"
				For Shade Widths to 90"	138"	138"	138"	120"	138"
				For Shade Widths to 96"	108"	108"	108"	108"	108"
				For Shade Widths to 102"	84"	84"	84"	84"	84"
				For Shade Widths to 108"	66"	66"	66"	66"	66"
				Railroaded					
				Maximum Width	108"	108"	108"	108"	108"
					Maximum Height				
				For Shade Widths to 84"	144"	144"	144"	120"	144"
				For Shade Widths to 90"	138"	138"	138"	120"	138"
				For Shade Widths to 96"	108"	108"	108"	108"	108"
				For Shade Widths to 102"	84"	84"	84"	84"	84"
				For Shade Widths to 108"	66"	66"	66"	66"	66"
7% Sheerweave 5000 *(R34_Q46)*	98"	NO	NO	**Non-Railroaded**					
				Maximum Width	98"	86"	86"	98"	98"
					Maximum Height				
				For Shade Widths to 72"	144"	102"	102"	66"	102"
				For Shade Widths to 84"	126"	102"	102"	66"	102"
				For Shade Widths to 86"	96"	96"	96"	66"	96"
				For Shade Widths to 90"	96"	N/A	N/A	66"	96"
				For Shade Widths over 90"	60"	N/A	N/A	60"	60"
7% Sheerweave 5000 *(R34_08, 09)*	98"	NO	NO	**Non-Railroaded**					
				Maximum Width	98"	88"	88"	98"	98"
					Maximum Height				
				For Shade Widths to 72"	144"	114"	114"	72"	114"
				For Shade Widths to 84"	126"	114"	114"	72"	114"
				For Shade Widths to 88"	96"	96"	96"	72"	96"
				For Shade Widths to 90"	96"	N/A	N/A	72"	96"
				For Shade Widths over 90"	60"	N/A	N/A	60"	60"
7% Sheerweave 5000 *(R34_S73)*	98"	NO	NO	**Non-Railroaded**					
				Maximum Width	96"	88"	88"	96"	96"
					Maximum Height				
				For Shade Widths to 54"	144"	96"	96"	60"	96"
				For Shade Widths to 60"	144"	96"	96"	60"	96"
				For Shade Widths to 66"	144"	96"	96"	60"	96"
				For Shade Widths to 72"	144"	96"	96"	60"	96"
				For Shade Widths to 78"	144"	96"	96"	60"	96"
				For Shade Widths to 84"	126"	96"	96"	60"	96"
				For Shade Widths to 88"	96"	96"	96"	60"	96"
				For Shade Widths to 90"	96"	NA	NA	60"	96"
				For Shade Widths to 96"	78"	NA	NA	60"	78"

PRODUCT SIZE SPECIFICATIONS – SIMPLICITY

Minimum and Maximum Standards
Please Note: Shade sizes that are wider than the fabric roll width indicated will be made with the fabric turned width for length (railroaded). The maximum width for non-railroaded shades is the roll width unless otherwise noted.

Minimum:	Width	Height
Simplicity	19"	12"

Fabrics turned width for length will have a visible seam when fabricated longer than their maximum roll width less 10". Fabrics turned width for length may have an edge curl. This is not considered a defect in the product.

Material Name	Roll Width	Railroad Option	Splice/ Seam		Motorized Shade Without Top Treament	Motorized Shade with Deluxe Valance	Motorized Shade with Fabric Valance	Motorized Shade with Medium Cassette	Motorized Shade with Large Cassette
10% E Screen	**122"**	**YES**	**YES**	**Non-Railroaded**					
				Maximum Width	**108"**	**108"**	**108"**	**108"**	**108"**
					Maximum Height				
				For Shade Widths to 84"	144"	144"	144"	138"	144"
				For Shade Widths to 90"	138"	138"	138"	138"	138"
				For Shade Widths to 96"	108"	108"	108"	108"	108"
				For Shade Widths to 102"	84"	84"	84"	84"	84"
				For Shade Widths over 102"	66"	66"	66"	66"	66"
				Railroaded					
				Maximum Width	**108"**	**108"**	**108"**	**108"**	**108"**
					Maximum Height				
				For Shade Widths to 84"	144"	144"	144"	138"	144"
				For Shade Widths to 90"	138"	138"	138"	138"	138"
				For Shade Widths to 96"	108"	108"	108"	108"	108"
				For Shade Widths to 102"	84"	84"	84"	84"	84"
				For Shade Widths over 102"	66"	66"	66"	66"	66"
10% Sheerweave 2360	**126"**	**NO**	**NO**	**Non-Railroaded**					
				Maximum Width	**102"**	**102"**	**102"**	**102"**	**102"**
					Maximum Height				
				For Shade Widths to 66"	144"	144"	144"	138"	144"
				For Shade Widths to 72"	144"	144"	144"	138"	144"
				For Shade Widths to 78"	144"	144"	144"	138"	144"
				For Shade Widths to 84"	144"	144"	144"	138"	144"
				For Shade Widths to 90"	138"	138"	138"	138"	138"
				For Shade Widths to 96"	108"	108"	108"	102"	108"
				For Shade Widths to 102"	84"	84"	84"	84"	84"
10% Sheerweave 4100	**98"**	**YES**	**YES**	**Non-Railroaded**					
				Maximum Width	**96"**	**88"**	**88"**	**96"**	**96"**
					Maximum Height				
				For Shade Widths to 54"	144"	120"	120"	78"	120"
				For Shade Widths to 60"	144"	120"	120"	78"	120"
				For Shade Widths to 66"	144"	120"	120"	78"	120"
				For Shade Widths to 72"	144"	120"	120"	78"	120"
				For Shade Widths to 78"	144"	120"	120"	78"	120"
				For Shade Widths to 84"	126"	120"	120"	78"	120"
				For Shade Widths to 88"	96"	96"	96"	78"	96"
				For Shade Widths to 90"	96"	N/A	N/A	78"	96"
				For Shade Widths to 96"	78"	N/A	N/A	78"	78"
				Railroaded					
				Maximum Width	**96"**	**96"**	**96"**	**96"**	**96"**
					Maximum Height				
				For Shade Widths to 54"	120"	120"	120"	78"	120"
				For Shade Widths to 60"	120"	120"	120"	78"	120"
				For Shade Widths to 66"	120"	120"	120"	78"	120"
				For Shade Widths to 72"	120"	120"	120"	78"	120"
				For Shade Widths to 78"	120"	120"	120"	78"	120"
				For Shade Widths to 84"	120"	120"	120"	78"	120"
				For Shade Widths to 90"	96"	96"	96"	78"	96"
				For Shade Widths to 96"	78"	78"	78"	78"	78"
10% Sheerweave 5000 *(R26_03)*	**98"**	**NO**	**NO**	**Non-Railroaded**					
				Maximum Width	**98"**	**88"**	**88"**	**98"**	**98"**
					Maximum Height				
				For Shade Widths to 72"	144"	90"	90"	54"	90"
				For Shade Widths to 84"	126"	90"	90"	54"	90"
				For Shade Widths to 88"	96"	90"	90"	54"	90"
				For Shade Widths to 90"	96"	N/A	N/A	54"	90"
				For Shade Widths over 90"	60"	N/A	N/A	54"	60"
10% Sheerweave 5000 *(R26_U16, U24, U28, U29)*	**98"**	**NO**	**NO**	**Non-Railroaded**					
				Maximum Width	**96"**	**88"**	**88"**	**96"**	**96"**
					Maximum Height				
				For Shade Widths to 54"	144"	102"	102"	66"	102"
				For Shade Widths to 60"	144"	102"	102"	66"	102"
				For Shade Widths to 66"	144"	102"	102"	66"	102"
				For Shade Widths to 72"	144"	102"	102"	66"	102"
				For Shade Widths to 78"	144"	102"	102"	66"	102"
				For Shade Widths to 84"	126"	102"	102"	66"	102"
				For Shade Widths to 88"	96"	96"	96"	66"	96"
				For Shade Widths to 90"	96"	NA	NA	66"	96"
				For Shade Widths to 96"	78"	NA	NA	66"	78"

PRODUCT SIZE SPECIFICATIONS – SIMPLICITY

Minimum and Maximum Standards
Please Note: Shade sizes that are wider than the fabric roll width indicated will be made with the fabric turned width for length (railroaded). The maximum width for non-railroaded shades is the roll width unless otherwise noted.

Minimum:	Width	Height
Simplicity	19"	12"

Fabrics turned width for length will have a visible seam when fabricated longer than their maximum roll width less 10". Fabrics turned width for length may have an edge curl. This is not considered a defect in the product.

Material Name	Roll Width	Railroad Option	Splice/ Seam		Simplicity Motorized Shade Without Top Treament	Simplicity Motorized Shade with Deluxe Valance	Simplicity Motorized Shade with Fabric Valance	Simplicity Motorized Shade with Medium Cassette	Simplicity Motorized Shade with Large Cassette
Alexandria	78"	NO	NO	Non-Railroaded					
				Maximum Width	78"	68"	68"	78"	78"
					Maximum Height				
				For Shade Widths to 68"	144"	144"	144"	144"	144"
				For Shade Widths to 72"	144"	N/A	N/A	144"	144"
				For Shade Widths to 78"	144"	N/A	N/A	144"	144"
Astaire	94"	NO	NO	Non-Railroaded					
				Maximum Width	94"	N/A	N/A	94"	94"
					Maximum Height				
				For Shade Widths to 94"	144"	N/A	N/A	78"	120"
Avila R Blackout	118"	YES	YES	Non-Railroaded					
				Maximum Width	108"	108"	108"	108"	108"
					Maximum Height				
				For Shade Widths to 84"	144"	144"	144"	144"	144"
				For Shade Widths to 90"	138"	138"	138"	138"	138"
				For Shade Widths to 96"	108"	108"	108"	108"	108"
				For Shade Widths over 96"	66"	66"	66"	66"	66"
				Railroaded					
				Maximum Width	108"	108"	108"	108"	108"
					Maximum Height				
				For Shade Widths to 84"	144"	144"	144"	144"	144"
				For Shade Widths to 90"	138"	138"	138"	138"	138"
				For Shade Widths to 96"	108"	108"	108"	108"	108"
				For Shade Widths over 96"	66"	66"	66"	66"	66"
Baroque	78"	NO	NO	Non-Railroaded					
				Maximum Width	78"	68"	68"	78"	78"
					Maximum Height				
				For Shade Widths to 68"	144"	144"	144"	144"	144"
				For Shade Widths to 78"	144"	N/A	N/A	144"	144"
Blackout - Solid	72"	YES	YES	Non-Railroaded					
				Maximum Width	72"	62"	N/A	72"	72"
					Maximum Height				
				For Shade Widths to 62"	144"	144"	N/A	144"	144"
				For Shade Widths to 72"	144"	N/A	N/A	144"	144"
				Railroaded					
				Maximum Width	108"	108"	N/A	108"	108"
					Maximum Height				
				For Shade Widths to 90"	130"	130"	N/A	130"	130"
				For Shade Widths to 96"	108"	108"	N/A	108"	108"
				For Shade Widths to 102"	84"	84"	N/A	84"	84"
				For Shade Widths over 102"	66"	66"	N/A	66"	66"
Brilliance	118"	NO	NO	Non-Railroaded					
				Maximum Width	118"	108"	108"	118"	118"
					Maximum Height				
				For Shade Widths to 96"	144"	144"	144"	144"	144"
				For Shade Widths over 96"	60"	60"	60"	60"	60"
Brilliance Blackout	118"	NO	NO	Non-Railroaded					
				Maximum Width	108"	108"	108"	108"	108"
					Maximum Height				
				For Shade Widths to 84"	144"	144"	144"	114"	144"
				For Shade Widths to 90"	138"	138"	138"	114"	138"
				For Shade Widths to 96"	108"	108"	108"	108"	108"
				For Shade Widths over 96"	66"	66"	66"	66"	66"

PRODUCT SIZE SPECIFICATIONS – SIMPLICITY

Minimum and Maximum Standards
Please Note: Shade sizes that are wider than the fabric roll width indicated will be made with the fabric turned width for length (railroaded). The maximum width for non-railroaded shades is the roll width unless otherwise noted.

Minimum:	Width	Height
Simplicity	19"	12"

Fabrics turned width for length will have a visible seam when fabricated longer than their maximum roll width less 10". Fabrics turned width for length may have an edge curl. This is not considered a defect in the product.

Material Name	Roll Width	Railroad Option	Splice/ Seam		Simplicity Motorized Shade Without Top Treament	Simplicity Motorized Shade with Deluxe Valance	Simplicity Motorized Shade with Fabric Valance	Simplicity Motorized Shade with Medium Cassette	Simplicity Motorized Shade with Large Cassette
Carrara	110"	NO	NO	Non-Railroaded					
				Maximum Width	110"	100"	100"	110"	110"
					Maximum Height				
				For Shade Widths to 66"	144"	144"	144"	144"	144"
				For Shade Widths to 78"	144"	144"	144"	144"	144"
				For Shade Widths to 90"	138"	138"	138"	138"	138"
				For Shade Widths to 100"	84"	84"	84"	84"	84"
				For Shade Widths to 102"	84"	NA	NA	84"	84"
				For Shade Widths to 108"	66"	NA	NA	66"	66"
				For Shade Widths to 110"	48"	NA	NA	48"	48"
Carrara Blackout	110"	NO	NO	Non-Railroaded					
				Maximum Width	102"	102"	102"	102"	102"
					Maximum Height				
				For Shade Widths to 72"	144"	144"	144"	96"	144"
				For Shade Widths to 84"	126"	126"	126"	96"	126"
				For Shade Widths to 90"	96"	108"	108"	96"	96"
				For Shade Widths to 96"	78"	90"	90"	78"	78"
				For Shade Widths over 96"	60"	66"	66"	60"	60"
Claudio	110"	NO	NO	Non-Railroaded					
				Maximum Width	110"	100"	100"	110"	110"
					Maximum Height				
				Max Height: Width to 100"	144"	144"	144"	144"	144"
				Max Height: Width to 102"	144"	N/A	N/A	144"	144"
				For Shade Widths over 102"	84"	N/A	N/A	84"	84"
Claudio Blackout	110"	NO	NO	Non-Railroaded					
				Maximum Width	108"	100"	100"	108"	108"
					Maximum Height				
				For Shade Widths to 84"	144"	144"	144"	114"	144"
				For Shade Widths to 90"	138"	138"	138"	114"	138"
				For Shade Widths to 96"	108"	108"	108"	108"	108"
				For Shade Widths over 96"	66"	66"	66"	66"	66"
Cusco	110"	YES	YES	Non-Railroaded					
				Maximum Width	102"	102"	102"	102"	102"
					Maximum Height				
				For Shade Widths to 84"	144"	144"	144"	132"	144"
				For Shade Widths to 90"	138"	138"	138"	132"	138"
				For Shade Widths to 96"	108"	108"	108"	108"	108"
				For Shade Widths to 102"	84"	84"	84"	84"	84"
				Railroaded					
				Maximum Width	102"	102"	102"	102"	102"
					Maximum Height				
				For Shade Widths to 84"	144"	144"	144"	132"	144"
				For Shade Widths to 90"	138"	138"	138"	132"	138"
				For Shade Widths to 96"	108"	108"	108"	108"	108"
				For Shade Widths to 102"	84"	84"	84"	84"	84"
Darien	90"	NO	NO	Non-Railroaded					
				Maximum Width	90"	80"	80"	90"	90"
					Maximum Height				
				Max Height: Width to 80"	144"	144"	144"	144"	144"
				Max Height: Width to 90"	144"	N/A	N/A	144"	144"
Drizzle	94"	YES	YES	Non-Railroaded					
				Maximum Width	94"	84"	84"	94"	94"
					Maximum Height				
				For Shade Widths to 68"	144"	144"	144"	144"	144"
				For Shade Widths to 78"	144"	144"	144"	144"	144"
				For Shade Widths to 84"	144"	144"	144"	144"	144"
				For Shade Widths to 90"	144"	NA	NA	144"	144"
				For Shade Widths over 90"	144"	NA	NA	144"	144"
				Railroaded					
				Maximum Width	120"	120"	120"	120"	120"
					Maximum Height				
				Max Height: Width to 102"	144"	144"	144"	144"	144"
				Max Height: Width to 108"	108"	108"	108"	108"	108"
				Max Height: Width to 114"	84"	84"	84"	84"	84"
				Max Height: Width to 120"	60"	60"	60"	60"	60"

PRODUCT SIZE SPECIFICATIONS – SIMPLICITY

Minimum and Maximum Standards
Please Note: Shade sizes that are wider than the fabric roll width indicated will be made with the fabric turned width for length (railroaded). The maximum width for non-railroaded shades is the roll width unless otherwise noted.

Minimum:	Width	Height
Simplicity	19"	12"

Fabrics turned width for length will have a visible seam when fabricated longer than their maximum roll width less 10". Fabrics turned width for length may have an edge curl. This is not considered a defect in the product.

Material Name	Roll Width	Railroad Option	Splice/ Seam		Simplicity Motorized Shade Without Top Treament	Simplicity Motorized Shade with Deluxe Valance	Simplicity Motorized Shade with Fabric Valance	Simplicity Motorized Shade with Medium Cassette	Simplicity Motorized Shade with Large Cassette
Fiona	78"	NO	NO	Non-Railroaded					
				Maximum Width	78"	68"	68"	78"	78"
					Maximum Height				
				For Shade Widths to 68"	144"	144"	144"	144"	144"
				For Shade Widths to 78"	144"	N/A	N/A	144"	144"
Flocke Blackout	94"	YES	YES	Non-Railroaded					
				Maximum Width	94"	84"	84"	94"	94"
					Maximum Height				
				For Shade Widths to 72"	144"	144"	144"	126"	144"
				For Shade Widths to 84"	126"	126"	126"	126"	126"
				For Shade Widths to 90"	96"	N/A	N/A	96"	96"
				For Shade Widths over 90"	78"	N/A	N/A	78"	78"
				Railroaded					
				Maximum Width	102"	102"	102"	102"	102"
					Maximum Height				
				For Shade Widths to 72"	144"	144"	144"	126"	144"
				For Shade Widths to 84"	126"	126"	126"	126"	126"
				For Shade Widths to 90"	96"	96"	96"	96"	96"
				For Shade Widths over 90"	60"	60"	60"	60"	60"
Hayworth	94"	YES	YES	Non-Railroaded					
				Maximum Width	94"	84"	84"	94"	94"
					Maximum Height				
				For Shade Widths to 84"	144"	144"	144"	144"	144"
				For Shade Widths over 90"	144"	N/A	N/A	144"	144"
				Railroaded					
				Maximum Width	120"	120"	120"	120"	120"
					Maximum Height				
				Max Height: Width to 102"	144"	144"	144"	144"	144"
				Max Height: Width to 108"	108"	108"	108"	108"	108"
				Max Height: Width to 114"	84"	84"	84"	84"	84"
				Max Height: Width to 120"	60"	60"	60"	60"	60"
Illusion	72"	YES	NO	Non-Railroaded					
				Maximum Width	72"	62"	62"	72"	72"
					Maximum Height				
				For Shade Widths to 62"	144"	144"	144"	144"	144"
				For Shade Widths to 72"	144"	N/A	N/A	144"	144"
				Railroaded					
				Maximum Width	120"	120"	120"	120"	120"
					Maximum Height				
				Max Height: Width to 120"	60"	60"	60"	60"	60"
Jasper	110"	YES	YES	Non-Railroaded					
				Maximum Width	108"	100"	100"	108"	108"
					Maximum Height				
				For Shade Widths to 84"	144"	144"	144"	144"	144"
				For Shade Widths to 90"	138"	138"	138"	138"	138"
				For Shade Widths to 96"	108"	108"	108"	108"	108"
				For Shade Widths over 96"	66"	66"	66"	66"	66"
				Railroaded					
				Maximum Width	108"	108"	108"	108"	108"
					Maximum Height				
				For Shade Widths to 84"	144"	144"	144"	144"	144"
				For Shade Widths to 90"	138"	138"	138"	138"	138"
				For Shade Widths to 96"	108"	108"	108"	108"	108"
				For Shade Widths over 96"	66"	66"	66"	66"	66"

PRODUCT SIZE SPECIFICATIONS – SIMPLICITY

Minimum and Maximum Standards
Please Note: Shade sizes that are wider than the fabric roll width indicated will be made with the fabric turned width for length (railroaded). The maximum width for non-railroaded shades is the roll width unless otherwise noted.

Minimum:	Width	Height
Simplicity	19"	12"

Fabrics turned width for length will have a visible seam when fabricated longer than their maximum roll width less 10". Fabrics turned width for length may have an edge curl. This is not considered a defect in the product.

Material Name	Roll Width	Railroad Option	Splice/ Seam		Simplicity Motorized Shade Without Top Treament	Simplicity Motorized Shade with Deluxe Valance	Simplicity Motorized Shade with Fabric Valance	Simplicity Motorized Shade with Medium Cassette	Simplicity Motorized Shade with Large Cassette
Linview	122"	YES	YES	Non-Railroaded					
				Maximum Width	108"	108"	108"	108"	108"
					Maximum Height				
				For Shade Widths to 96"	144"	144"	144"	144"	144"
				For Shade Widths to 102"	144"	144"	144"	144"	144"
				For Shade Widths to 108"	108"	108"	108"	108"	108"
				Railroaded					
				Maximum Width	108"	108"	108"	108"	108"
					Maximum Height				
				For Shade Widths to 96"	120"	120"	120"	120"	120"
				For Shade Widths to 102"	120"	120"	120"	120"	120"
				For Shade Widths to 108"	108"	108"	108"	108"	108"
Linview Blackout	94"	NO	NO	Non-Railroaded					
				Maximum Width	94"	84"	84"	94"	94"
					Maximum Height				
				For Shade Widths to 84"	144"	144"	144"	144"	144"
				For Shade Widths to 90"	138"	N/A	N/A	138"	138"
				For Shade Widths over 90"	108"	N/A	N/A	108"	108"
Montero	94"	NO	NO	Non-Railroaded					
				Maximum Width	94"	84"	84"	94"	94"
					Maximum Height				
				For Shade Widths to 84"	144"	144"	144"	126"	144"
				For Shade Widths to 90"	138"	N/A	N/A	126"	138"
				For Shade Widths over 90"	108"	N/A	N/A	108"	108"
Moravia	96"	NO	NO	Non-Railroaded					
				Maximum Width	96"	86"	86"	96"	96"
					Maximum Height				
				For Shade Widths to 86"	144"	144"	144"	138"	144"
				For Shade Widths over 90"	144"	N/A	N/A	138"	144"
Santa Cruz	94"	NO	NO	Non-Railroaded					
				Maximum Width	94"	84"	84"	94"	94"
					Maximum Height				
				For Shade Widths to 84"	144"	144"	144"	138"	144"
				For Shade Widths to 90"	138"	N/A	N/A	138"	138"
				For Shade Widths over 90"	108"	N/A	N/A	108"	108"
Santa Cruz Blackout	94"	NO	NO	Non-Railroaded					
				Maximum Width	94"	84"	84"	94"	94"
					Maximum Height				
				For Shade Widths to 72"	144"	144"	144"	102"	144"
				For Shade Widths to 84"	126"	126"	126"	102"	126"
				For Shade Widths to 90"	96"	N/A	N/A	96"	96"
				For Shade Widths over 90"	78"	N/A	N/A	78"	78"
Scala Blackout	110"	YES	YES	Non-Railroaded					
				Maximum Width	102"	100"	N/A	102"	102"
					Maximum Height				
				For Shade Widths to 84"	144"	144"	N/A	144"	144"
				For Shade Widths to 90"	138"	138"	N/A	138"	138"
				For Shade Widths to 96"	108"	108"	N/A	108"	108"
				For Shade Widths to 100"	84"	84"	N/A	84"	84"
				For Shade Widths to 102"	84"	N/A	N/A	84"	84"
				Railroaded					
				Maximum Width	102"	100"	N/A	102"	102"
					Maximum Height				
				For Shade Widths to 84"	144"	144"	N/A	144"	144"
				For Shade Widths to 90"	138"	138"	N/A	138"	138"
				For Shade Widths to 96"	108"	108"	N/A	108"	108"
				For Shade Widths to 100"	84"	84"	N/A	84"	84"
				For Shade Widths to 102"	84"	N/A	N/A	84"	84"

PRODUCT SIZE SPECIFICATIONS – SIMPLICITY

Minimum and Maximum Standards
Please Note: Shade sizes that are wider than the fabric roll width indicated will be made with the fabric turned width for length (railroaded). The maximum width for non-railroaded shades is the roll width unless otherwise noted.

Minimum:	Width	Height
Simplicity	19"	12"

Fabrics turned width for length will have a visible seam when fabricated longer than their maximum roll width less 10". Fabrics turned width for length may have an edge curl. This is not considered a defect in the product.

Material Name	Roll Width	Railroad Option	Splice/ Seam		Simplicity Motorized Shade Without Top Treament	Simplicity Motorized Shade with Deluxe Valance	Simplicity Motorized Shade with Fabric Valance	Simplicity Motorized Shade with Medium Cassette	Simplicity Motorized Shade with Large Cassette
Sheerweave 7200R	118"	NO	NO	Non-Railroaded					
				Maximum Width	102"	102"	102"	102"	102"
					Maximum Height				
				For Shade Widths to 66"	144"	144"	144"	114"	144"
				For Shade Widths to 72"	144"	144"	144"	114"	144"
				For Shade Widths to 78"	144"	144"	144"	114"	144"
				For Shade Widths to 84"	144"	144"	144"	114"	144"
				For Shade Widths to 90"	138"	138"	138"	114	138"
				For Shade Widths to 96"	108"	108"	108"	108"	108"
				For Shade Widths to 102"	84"	84"	84"	84"	84"
Sheerweave 7250R	118"	NO	NO	Non-Railroaded					
				Maximum Width	96"	96"	96"	96"	96"
					Maximum Height				
				For Shade Widths to 96"	120"	120"	120"	120"	120"
Sheerweave 7400	118"	NO	NO	Non-Railroaded					
				Maximum Width	96"	96"	96"	96"	96"
					Maximum Height				
				For Shade Widths to 54"	144"	132"	132"	84"	132"
				For Shade Widths to 60"	144"	132"	132"	84"	132"
				For Shade Widths to 66"	144"	132"	132"	84"	132"
				For Shade Widths to 72"	144"	132"	132"	84"	132"
				For Shade Widths to 78"	144"	132"	132"	84"	132"
				For Shade Widths to 84"	126"	126"	126"	84"	126"
				For Shade Widths to 90"	96"	96"	96"	84"	96"
				For Shade Widths to 96"	78"	78"	78"	78"	78"
Sheerweave 7450	118"	NO	NO	Non-Railroaded					
				Maximum Width	108"	108"	108"	108"	108"
					Maximum Height				
				For Shade Widths to 96"	144"	144"	144"	132"	144"
				For Shade Widths to 102"	144"	144"	144"	132"	144"
				For Shade Widths to 108"	108"	108"	108"	108"	108"
Sheerweave 7500	118"	NO	NO	Non-Railroaded					
				Maximum Width	96"	96"	N/A	96"	96"
					Maximum Height				
				For Shade Widths to 66"	120"	120"	NA	120"	120"
				For Shade Widths to 72"	120"	120"	N/A	120"	120"
				For Shade Widths to 78"	120"	120"	N/A	120"	120"
				For Shade Widths to 84"	120"	120"	N/A	120"	120"
				For Shade Widths to 90"	120"	120"	N/A	120"	120"
				For Shade Widths to 96"	108"	108"	N/A	108"	108"
Sheerweave 7500R	118"	NO	NO	Non-Railroaded					
				Maximum Width	102"	102"	N/A	102"	102"
					Maximum Height				
				For Shade Widths to 66"	144"	144"	NA	144"	144"
				For Shade Widths to 72"	144"	144"	N/A	144"	144"
				For Shade Widths to 78"	144"	144"	N/A	144"	144"
				For Shade Widths to 84"	144"	144"	N/A	144"	144"
				For Shade Widths to 90"	138"	138"	N/A	138"	138"
				For Shade Widths to 96"	108"	108"	N/A	108"	108"
				For Shade Widths to 102"	84"	84"	N/A	84"	84"
Sheerweave 7600	118"	NO	NO	Non-Railroaded					
				Maximum Width	102"	102"	102"	102"	102"
					Maximum Height				
				For Shade Widths to 66"	144"	144"	144"	126"	144"
				For Shade Widths to 72"	144"	144"	144"	126"	144"
				For Shade Widths to 78"	144"	144"	144"	126"	144"
				For Shade Widths to 84"	144"	144"	144"	126"	144"
				For Shade Widths to 90"	138"	138"	138"	126"	138"
				For Shade Widths to 96"	108"	108"	108"	108"	108"
				For Shade Widths to 102"	84"	84"	84"	84"	84"
Sheerweave 7650	118"	NO	NO	Non-Railroaded					
				Maximum Width	108"	108"	108"	108"	108"
					Maximum Height				
				For Shade Widths to 96"	144"	144"	144"	144"	144"
				For Shade Widths to 102"	144"	144"	144"	144"	144"
				For Shade Widths to 108"	108"	108"	108"	108"	108"

PRODUCT SIZE SPECIFICATIONS – SIMPLICITY

Minimum and Maximum Standards
Please Note: Shade sizes that are wider than the fabric roll width indicated will be made with the fabric turned width for length (railroaded). The maximum width for non-railroaded shades is the roll width unless otherwise noted.

Minimum:	Width	Height
Simplicity	19"	12"

Fabrics turned width for length will have a visible seam when fabricated longer than their maximum roll width less 10". Fabrics turned width for length may have an edge curl. This is not considered a defect in the product.

Material Name	Roll Width	Railroad Option	Splice/ Seam		Simplicity Motorized Shade Without Top Treament	Simplicity Motorized Shade with Deluxe Valance	Simplicity Motorized Shade with Fabric Valance	Simplicity Motorized Shade with Medium Cassette	Simplicity Motorized Shade with Large Cassette
Sheerweave 7700R	**118"**	**NO**	**NO**	**Non-Railroaded**					
				Maximum Width	**96"**	**96"**	**96"**	**96"**	**96"**
					Maximum Height				
				For Shade Widths to 54"	144"	144"	144"	96"	144"
				For Shade Widths to 60"	144"	144"	144"	96"	144"
				For Shade Widths to 66"	144"	144"	144"	96"	144"
				For Shade Widths to 72"	144"	144"	144"	96"	144"
				For Shade Widths to 78"	144"	144"	144"	96"	144"
				For Shade Widths to 84"	126"	126"	126"	96"	126"
				For Shade Widths to 90"	96"	96"	96"	96"	96"
				For Shade Widths to 96"	78"	78"	78"	78"	78"
Sheerweave 7750R	**118"**	**NO**	**NO**	**Non-Railroaded**					
				Maximum Width	**98"**	**98"**	**98"**	**98"**	**98"**
					Maximum Height				
				For Shade Widths to 66"	120"	120"	120"	120"	120"
				For Shade Widths to 72"	120"	120"	120"	120"	120"
				For Shade Widths to 78"	120"	120"	120"	120"	120"
				For Shade Widths to 84"	120"	120"	120"	120"	120"
				For Shade Widths to 90"	120"	120"	120"	120"	120"
				For Shade Widths to 96"	108"	108"	108"	108"	108"
				For Shade Widths to 98"	84"	84"	84"	84"	84"
Sorrento	**108"**	**NO**	**NO**	**Non-Railroaded**					
				Maximum Width	**108"**	**98"**	**98"**	**108"**	**108"**
					Maximum Height				
				For Shade Widths to 96"	144"	144"	144"	108"	144"
				For Shade Widths over 96"	108"	108"	108"	108"	108"
Sunscreen (SW) 7000	**118"**	**YES**	**YES**	**Non-Railroaded**					
				Maximum Width	**102"**	**102"**	**102"**	**102"**	**102"**
					Maximum Height				
				For Shade Widths to 72"	144"	144"	144"	96"	144"
				For Shade Widths to 84"	126"	126"	126"	96"	126"
				For Shade Widths to 90"	96"	96"	96"	96"	96"
				For Shade Widths over 96"	78"	78"	78"	78"	78"
				For Shade Widths over 96"	60"	60"	60"	60"	60"
				Railroaded					
				Maximum Width	**102"**	**102"**	**102"**	**102"**	**102"**
					Maximum Height				
				For Shade Widths to 72"	144"	144"	144"	96"	144"
				For Shade Widths to 84"	126"	126"	126"	96"	126"
				For Shade Widths to 90"	96"	96"	96"	96"	96"
				For Shade Widths over 96"	78"	78"	78"	78"	78"
				For Shade Widths over 96"	60"	60"	60"	60"	60"
Tundra	**94"**	**NO**	**NO**	**Non-Railroaded**					
				Maximum Width	**94"**	**84"**	**84"**	**94"**	**94"**
					Maximum Height				
				For Shade Widths to 84"	144"	144"	144"	144"	144"
				For Shade Widths to 90"	144"	N/A	N/A	144"	144"
				For Shade Widths to 94"	144"	N/A	N/A	144"	144"
Tundra Blackout	**94"**	**NO**	**NO**	**Non-Railroaded**					
				Maximum Width	**94"**	**84"**	**84"**	**94"**	**94"**
					Maximum Height				
				For Shade Widths to 66"	120"	120"	120"	120"	120"
				For Shade Widths to 72"	120"	120"	120"	120"	120"
				For Shade Widths to 78"	120"	120"	120"	120"	120"
				For Shade Widths to 84"	120"	120"	120"	120"	120"
				For Shade Widths to 90"	120"	N/A	N/A	120"	120"
				For Shade Widths to 94"	108"	N/A	N/A	108"	108"
Uptown *(R79_02)*	**78"**	**YES**	**NO**	**Non-Railroaded**					
				Maximum Width	**78"**	**68"**	**68"**	**78"**	**78"**
					Maximum Height				
				For Shade Widths to 68"	144"	144"	144"	144"	144"
				For Shade Widths to 78"	144"	N/A	N/A	144"	144"
				Railroaded					
				Maximum Width	**120"**	**120"**	**120"**	**120"**	**120"**
					Maximum Height				
				For Shade Widths to 102"	66"	66"	66"	66"	66"
				For Shade Widths over 102"	60"	60"	60"	60"	60"

PRODUCT SIZE SPECIFICATIONS – SIMPLICITY

Minimum and Maximum Standards
Please Note: Shade sizes that are wider than the fabric roll width indicated will be made with the fabric turned width for length (railroaded). The maximum width for non-railroaded shades is the roll width unless otherwise noted.

Minimum:	Width	Height
Simplicity	19"	12"

Fabrics turned width for length will have a visible seam when fabricated longer than their maximum roll width less 10". Fabrics turned width for length may have an edge curl. This is not considered a defect in the product.

Material Name	Roll Width	Railroad Option	Splice/ Seam		Simplicity Motorized Shade Without Top Treament	Simplicity Motorized Shade with Deluxe Valance	Simplicity Motorized Shade with Fabric Valance	Simplicity Motorized Shade with Medium Cassette	Simplicity Motorized Shade with Large Cassette
Uptown Room Darkening *(R79_01)*	78"	YES	NO	**Non-Railroaded**					
				Maximum Width	78"	68"	68"	78"	78"
					Maximum Height				
				For Shade Widths to 68"	144"	144"	144"	144"	144"
				For Shade Widths to 78"	144"	N/A	N/A	144"	144"
				Railroaded					
				Maximum Width	108"	108"	108"	108"	108"
					Maximum Height				
				For Shade Widths to 108"	66"	66"	66"	66"	66"
World Textures 1	78"	YES	YES	**Non-Railroaded**					
				Maximum Width	78"	68"	68"	78"	78"
					Maximum Height				
				For Shade Widths to 68"	144"	144"	144"	138"	144"
				For Shade Widths to 78"	144"	N/A	N/A	138"	144"
				Railroaded					
				Maximum Width	108"	108"	108"	108"	108"
					Maximum Height				
				For Shade Widths to 84"	144"	144"	144"	138"	144"
				For Shade Widths to 90"	138"	138"	138"	138"	138"
				For Shade Widths to 96"	108"	108"	108"	108"	108"
				For Shade Widths to 102"	84"	84"	84"	84"	84"
				For Shade Widths over 102"	66"	66"	66"	66"	66"
World Textures 1 Blackout	78"	YES	YES	**Non-Railroaded**					
				Maximum Width	78	68"	68"	78	78
					Maximum Height				
				For Shade Widths to 68"	144"	144"	144"	108"	144"
				For Shade Widths to 78"	144"	N/A	N/A	108"	144"
				Railroaded					
				Maximum Width	102"	102"	102"	102"	102"
					Maximum Height				
				For Shade Widths to 84"	144"	144"	144"	108"	144"
				For Shade Widths to 90"	138"	138"	138"	108"	138"
				For Shade Widths to 96"	108"	108"	108"	108"	108"
				For Shade Widths to 102"	84"	84"	84"	84"	84"
World Textures 2	80"	YES	YES	**Non-Railroaded**					
				Maximum Width	80"	70"	70"	80"	80"
					Maximum Height				
				For Shade Widths to 70"	144"	138"	138"	90"	138"
				For Shade Widths to 80"	144"	N/A	N/A	90"	138"
				Railroaded					
				Maximum Width	102"	102"	102"	102"	102"
					Maximum Height				
				For Shade Widths to 84"	144"	138"	138"	90"	138"
				For Shade Widths to 90"	138"	138"	138"	90"	138"
				For Shade Widths to 96"	108"	108"	108"	90"	108"
				For Shade Widths to 102"	84"	84"	84"	84"	84"
World Textures 2 Blackout	80"	YES	YES	**Non-Railroaded**					
				Maximum Width	80"	70"	70"	80"	80"
					Maximum Height				
				For Shade Widths to 70"	144"	144"	144"	114"	144"
				For Shade Widths to 80"	144"	N/A	N/A	114"	144"
				Railroaded					
				Maximum Width	102"	102"	102"	102"	102"
					Maximum Height				
				For Shade Widths to 84"	144"	144"	144"	114"	144"
				For Shade Widths to 90"	138"	138"	138"	114"	138"
				For Shade Widths to 96"	108"	108"	108"	108"	108"
				For Shade Widths to 102"	84"	84"	84"	84"	84"

PRODUCT SIZE SPECIFICATIONS – REMOTELIFT™ ROLLUP 28 WIREFREE

Minimum and Maximum Standards
Please Note: Shade sizes that are wider than the fabric roll width indicated will be made with the fabric turned width for length (railroaded). The maximum width for non-railroaded shades is the roll width unless otherwise noted.

Minimum:	Width	Height
R28WF	17"	12"

Fabrics turned width for length will have a visible seam when fabricated longer than their maximum roll width less 10". Fabrics turned width for length may have an edge curl. This is not considered a defect in the product.

Material Name	Roll Width	Railroad Option	Splice /Seam		RemoteLift Shade without Top Treatment	RemoteLift with Deluxe Valance	RemoteLift with Fabric Valance	RemoteLift with Medium Cassette	RemoteLift with Large Cassette	RemoteLift with 3" Fascia	RemoteLift with 4" Fascia and Pocket Headrail
1% E Screen	122"	YES	YES	Non-Railroaded							
				Maximum Width	102"	102"	102"	102"	102"	102"	102"
					Maximum Height						
				For Shade Widths to 66"	144"	144"	144"	138"	144"	144"	138"
				For Shade Widths to 72"	138"	138"	138"	138"	138"	138"	138"
				For Shade Widths to 84"	120"	120"	120"	120"	120"	120"	120"
				For Shade Widths to 90"	108"	108"	108"	108"	108"	102"	108"
				For Shade Widths to 96"	102"	102"	102"	102"	102"	102"	102"
				For Shade Widths to 102"	84"	84"	84"	84"	84"	84"	84"
				Railroaded							
				Maximum Width	102"	102"	102"	102"	102"	102"	102"
					Maximum Height						
				For Shade Widths to 66"	144"	144"	144"	138"	144"	144"	138"
				For Shade Widths to 72"	138"	138"	138"	138"	138"	138"	138"
				For Shade Widths to 84"	120"	120"	120"	120"	120"	120"	120"
				For Shade Widths to 90"	108"	108"	108"	108"	108"	102"	108"
				For Shade Widths to 96"	102"	102"	102"	102"	102"	102"	102"
				For Shade Widths to 102"	84"	84"	84"	84"	84"	84"	84"
1% Sheerweave 2500	126"	YES	YES	Non-Railroaded							
				Maximum Width	96"	96"	96"	96"	96"	96"	96"
					Maximum Height						
				For Shade Widths to 60"	126"	126"	126"	114"	126"	126"	126"
				For Shade Widths to 72"	102"	102"	102"	102"	102"	102"	102"
				For Shade Widths to 78"	90"	90"	90"	90"	90"	90"	90"
				For Shade Widths to 84"	84"	84"	84"	84"	84"	84"	84"
				For Shade Widths to 90"	78"	78"	78"	78"	78"	78"	78"
				For Shade Widths to 96"	72"	72"	72"	72"	72"	72"	72"
				Railroaded							
				Maximum Width	96"	96"	96"	96"	96"	96"	96"
					Maximum Height						
				For Shade Widths to 60"	126"	126"	126"	114"	126"	126"	126"
				For Shade Widths to 72"	102"	102"	102"	102"	102"	102"	102"
				For Shade Widths to 78"	90"	90"	90"	90"	90"	90"	90"
				For Shade Widths to 84"	84"	84"	84"	84"	84"	84"	84"
				For Shade Widths to 90"	78"	78"	78"	78"	78"	78"	78"
				For Shade Widths to 96"	72"	72"	72"	72"	72"	72"	72"
1% Sheerweave 2701	126"	YES	YES	Non-Railroaded							
				Maximum Width	96"	96"	96"	96"	96"	96"	96"
					Maximum Height						
				For Shade Widths to 60"	126"	126"	126"	126"	126"	126"	126"
				For Shade Widths to 72"	102"	102"	102"	102"	102"	102"	102"
				For Shade Widths to 78"	90"	90"	90"	90"	90"	90"	90"
				For Shade Widths to 84"	84"	84"	84"	84"	84"	84"	84"
				For Shade Widths to 90"	78"	78"	78"	78"	78"	78"	78"
				For Shade Widths to 96"	72"	72"	72"	72"	72"	72"	72"
				Railroaded							
				Maximum Width	96"	96"	96"	96"	96"	96"	96"
					Maximum Height						
				For Shade Widths to 60"	126"	126"	126"	126"	126"	126"	126"
				For Shade Widths to 72"	102"	102"	102"	102"	102"	102"	102"
				For Shade Widths to 78"	90"	90"	90"	90"	90"	90"	90"
				For Shade Widths to 84"	84"	84"	84"	84"	84"	84"	84"
				For Shade Widths to 90"	78"	78"	78"	78"	78"	78"	78"
				For Shade Widths to 96"	72"	72"	72"	72"	72"	72"	72"
1% Sheerweave 4901	98"	NO	NO	Non-Railroaded							
				Maximum Width	96"	88"	88"	96"	96"	96"	96"
					Maximum Height						
				For Shade Widths to 54"	138"	138"	138"	96"	138"	126"	138"
				For Shade Widths to 60"	126"	126"	126"	96"	126"	126"	126"
				For Shade Widths to 66"	108"	108"	108"	96"	108"	108"	108"
				For Shade Widths to 72"	102"	102"	102"	96"	102"	102"	102"
				For Shade Widths to 78"	90"	90"	90"	90"	90"	90"	90"
				For Shade Widths to 84"	84"	84"	84"	84"	84"	84"	84"
				For Shade Widths to 88"	78"	78"	78"	78"	78"	78"	78"
				For Shade Widths to 90"	78"	N/A	N/A	78"	78"	78"	78"
				For Shade Widths to 96"	72"	N/A	N/A	72"	72"	72"	72"
1% Sheerweave 5000	98"	NO	NO	Non-Railroaded							
				Maximum Width	96"	90"	90"	96"	96"	96"	96"
					Maximum Height						
				For Shade Widths to 60"	126"	86"	86"	54"	86"	75"	126"
				For Shade Widths to 72"	102"	86"	86"	54"	86"	75"	102"
				For Shade Widths to 78"	90"	86"	86"	54"	86"	75"	90"
				For Shade Widths to 84"	84"	84"	84"	54"	84"	75"	84"
				For Shade Widths to 90"	78"	78"	78"	54"	78"	75"	78"
				For Shade Widths to 96"	72"	NA	NA	54"	72"	72"	72"

PRODUCT SIZE SPECIFICATIONS – REMOTELIFT™ ROLLUP 28 WIREFREE

Minimum and Maximum Standards
Please Note: Shade sizes that are wider than the fabric roll width indicated will be made with the fabric turned width for length (railroaded). The maximum width for non-railroaded shades is the roll width unless otherwise noted.

Minimum:	Width	Height
R28WF	17"	12"

Fabrics turned width for length will have a visible seam when fabricated longer than their maximum roll width less 10". Fabrics turned width for length may have an edge curl. This is not considered a defect in the product.

Material Name	Roll Width	Railroad Option	Splice /Seam		RemoteLift Shade without Top Treatment	RemoteLift with Deluxe Valance	RemoteLift with Fabric Valance	RemoteLift with Medium Cassette	RemoteLift with Large Cassette	RemoteLift with 3" Fascia	RemoteLift with 4" Fascia and Pocket Headrail
1% Toka	118"	YES	YES	Non-Railroaded							
				Maximum Width	96"	96"	96"	96"	96"	96"	96"
					Maximum Height						
				For Shade Widths to 60"	126"	126"	126"	96"	126"	126"	126"
				For Shade Widths to 72"	102"	102"	102"	96"	102"	102"	102"
				For Shade Widths to 78"	90"	90"	90"	90"	90"	90"	90"
				For Shade Widths to 84"	84"	84"	84"	84"	84"	84"	84"
				For Shade Widths to 90"	78"	78"	78"	78"	78"	78"	78"
				For Shade Widths to 96"	72"	72"	72"	72"	72"	72"	72"
				Railroaded							
				Maximum Width	96"	96"	96"	96"	96"	96"	96"
					Maximum Height						
				For Shade Widths to 60"	126"	126"	126"	96"	126"	126"	126"
				For Shade Widths to 72"	102"	102"	102"	96"	102"	102"	102"
				For Shade Widths to 78"	90"	90"	90"	90"	90"	90"	90"
				For Shade Widths to 84"	84"	84"	84"	84"	84"	84"	84"
				For Shade Widths to 90"	78"	78"	78"	78"	78"	78"	78"
				For Shade Widths to 96"	72"	72"	72"	72"	72"	72"	72"
3% E Screen	122"	YES	YES	Non-Railroaded							
				Maximum Width	102"	102"	102"	102"	102"	102"	102"
					Maximum Height						
				For Shade Widths to 66"	144"	144"	144"	144"	144"	144"	144"
				For Shade Widths to 72"	138"	138"	138"	138"	138"	138"	138"
				For Shade Widths to 84"	120"	120"	120"	120"	120"	120"	120"
				For Shade Widths to 90"	108"	108"	108"	108"	108"	108"	108"
				For Shade Widths to 96"	102"	102"	102"	102"	102"	102"	102"
				For Shade Widths to 102"	84"	84"	84"	84"	84"	84"	84"
				Railroaded							
				Maximum Width	102"	102"	102"	102"	102"	102"	102"
					Maximum Height						
				For Shade Widths to 66"	144"	144"	144"	144"	144"	144"	144"
				For Shade Widths to 72"	138"	138"	138"	138"	138"	138"	138"
				For Shade Widths to 84"	120"	120"	120"	120"	120"	120"	120"
				For Shade Widths to 90"	108"	108"	108"	108"	108"	108"	108"
				For Shade Widths to 96"	102"	102"	102"	102"	102"	102"	102"
				For Shade Widths to 102"	84"	84"	84"	84"	84"	84"	84"
3% M Screen	122"	YES	YES	Non-Railroaded							
				Maximum Width	102"	102"	102"	102"	102"	102"	102"
					Maximum Height						
				For Shade Widths to 66"	144"	144"	144"	144"	144"	144"	144"
				For Shade Widths to 72"	138"	138"	138"	138"	138"	138"	138"
				For Shade Widths to 84"	120"	120"	120"	120"	120"	120"	120"
				For Shade Widths to 90"	108"	108"	108"	108"	108"	108"	108"
				For Shade Widths to 96"	102"	102"	102"	102"	102"	102"	102"
				For Shade Widths to 102"	84"	84"	84"	84"	84"	84"	84"
				Railroaded							
				Maximum Width	102"	102"	102"	102"	102"	102"	102"
					Maximum Height						
				For Shade Widths to 66"	144"	144"	144"	144"	144"	144"	144"
				For Shade Widths to 72"	138"	138"	138"	138"	138"	138"	138"
				For Shade Widths to 84"	120"	120"	120"	120"	120"	120"	120"
				For Shade Widths to 90"	108"	108"	108"	108"	108"	108"	108"
				For Shade Widths to 96"	102"	102"	102"	102"	102"	102"	102"
				For Shade Widths to 102"	84"	84"	84"	84"	84"	84"	84"

PRODUCT SIZE SPECIFICATIONS – REMOTELIFT™ ROLLUP 28 WIREFREE

Minimum and Maximum Standards

Please Note: Shade sizes that are wider than the fabric roll width indicated will be made with the fabric turned width for length (railroaded). The maximum width for non-railroaded shades is the roll width unless otherwise noted.

Minimum:	Width	Height
R28WF	17"	12"

Fabrics turned width for length will have a visible seam when fabricated longer than their maximum roll width less 10". Fabrics turned width for length may have an edge curl. This is not considered a defect in the product.

Material Name	Roll Width	Railroad Option	Splice /Seam		RemoteLift Shade without Top Treatment	RemoteLift with Deluxe Valance	RemoteLift with Fabric Valance	RemoteLift with Medium Cassette	RemoteLift with Large Cassette	RemoteLift with 3" Fascia	RemoteLift with 4" Fascia and Pocket Headrail
3% Sheerweave 2410	126"	YES	YES	Non-Railroaded							
				Maximum Width	102"	102"	102"	102"	102"	102"	102"
					Maximum Height						
				For Shade Widths to 66"	108"	108"	108"	108"	108"	108"	108"
				For Shade Widths to 72"	102"	102"	102"	102"	102"	102"	102"
				For Shade Widths to 84"	84"	84"	84"	84"	84"	84"	84"
				For Shade Widths to 90"	78"	78"	78"	78"	78"	78"	78"
				For Shade Widths to 96"	72"	72"	72"	72"	72"	72"	72"
				For Shade Widths to 102"	60"	60"	60"	60"	60"	60"	60"
				Railroaded							
				Maximum Width	102"	102"	102"	102"	102"	102"	102"
					Maximum Height						
				For Shade Widths to 66"	108"	108"	108"	108"	108"	108"	108"
				For Shade Widths to 72"	102"	102"	102"	102"	102"	102"	102"
				For Shade Widths to 84"	84"	84"	84"	84"	84"	84"	84"
				For Shade Widths to 90"	78"	78"	78"	78"	78"	78"	78"
				For Shade Widths to 96"	72"	72"	72"	72"	72"	72"	72"
				For Shade Widths to 102"	60"	60"	60"	60"	60"	60"	60"
3% Sheerweave 2703	126"	YES	YES	Non-Railroaded							
				Maximum Width	96"	96"	96"	96"	96"	96"	96"
					Maximum Height						
				For Shade Widths to 54"	138"	138"	138"	96"	138"	126"	138"
				For Shade Widths to 60"	126"	126"	126"	96"	126"	126"	126"
				For Shade Widths to 66"	108"	108"	108"	96"	108"	108"	108"
				For Shade Widths to 72"	102"	102"	102"	96"	102"	102"	102"
				For Shade Widths to 78"	90"	90"	90"	90"	90"	90"	90"
				For Shade Widths to 84"	84"	84"	84"	84"	84"	84"	84"
				For Shade Widths to 90"	78"	78"	78"	78"	78"	78"	78"
				For Shade Widths to 96"	72"	72"	72"	72"	72"	72"	72"
				Railroaded							
				Maximum Width	96"	96"	96"	96"	96"	96"	96"
					Maximum Height						
				For Shade Widths to 54"	138"	138"	138"	96"	138"	126"	138"
				For Shade Widths to 60"	126"	126"	126"	96"	126"	126"	126"
				For Shade Widths to 66"	108"	108"	108"	96"	108"	108"	108"
				For Shade Widths to 72"	102"	102"	102"	96"	102"	102"	102"
				For Shade Widths to 78"	90"	90"	90"	90"	90"	90"	90"
				For Shade Widths to 84"	84"	84"	84"	84"	84"	84"	84"
				For Shade Widths to 90"	78"	78"	78"	78"	78"	78"	78"
				For Shade Widths to 96"	72"	72"	72"	72"	72"	72"	72"
3% Sheerweave 4400	126"	YES	YES	Non-Railroaded							
				Maximum Width	96"	96"	96"	96"	96"	96"	96"
					Maximum Height						
				For Shade Widths to 60"	126"	120"	120"	78"	120"	108"	126"
				For Shade Widths to 72"	102"	102"	102"	78"	102"	102"	102"
				For Shade Widths to 78"	90"	90"	90"	78"	90"	90"	90"
				For Shade Widths to 84"	84"	84"	84"	78"	84"	84"	84"
				For Shade Widths to 90"	78"	78"	78"	78"	78"	78"	78"
				For Shade Widths to 96"	72"	72"	72"	72"	72"	72"	72"
				Railroaded							
				Maximum Width	96"	96"	96"	96"	96"	96"	96"
					Maximum Height						
				For Shade Widths to 60"	126"	120"	120"	78"	120"	108"	126"
				For Shade Widths to 72"	102"	102"	102"	78"	102"	102"	102"
				For Shade Widths to 78"	90"	90"	90"	78"	90"	90"	90"
				For Shade Widths to 84"	84"	84"	84"	78"	84"	84"	84"
				For Shade Widths to 90"	78"	78"	78"	78"	78"	78"	78"
				For Shade Widths to 96"	72"	72"	72"	72"	72"	72"	72"
3% Sheerweave 4600	126"	YES	YES	Non-Railroaded							
				Maximum Width	96"	96"	96"	96"	96"	96"	96"
					Maximum Height						
				For Shade Widths to 54"	120"	120"	120"	84"	120"	114"	120"
				For Shade Widths to 60"	120"	120"	120"	84"	120"	114"	120"
				For Shade Widths to 66"	108"	108"	108"	84"	108"	108"	108"
				For Shade Widths to 72"	102"	102"	102"	84"	102"	102"	102"
				For Shade Widths to 78"	90"	90"	90"	84"	90"	90"	90"
				For Shade Widths to 84"	84"	84"	84"	84"	84"	84"	84"
				For Shade Widths to 90"	78"	78"	78"	78"	78"	78"	78"
				For Shade Widths to 96"	72"	72"	72"	72"	72"	72"	72"
				Railroaded							
				Maximum Width	96"	96"	96"	96"	96"	96"	96"
					Maximum Height						
				For Shade Widths to 54"	120"	120"	120"	84"	120"	114"	120"
				For Shade Widths to 60"	120"	120"	120"	84"	120"	114"	120"
				For Shade Widths to 66"	108"	108"	108"	84"	108"	108"	108"
				For Shade Widths to 72"	102"	102"	102"	84"	102"	102"	102"
				For Shade Widths to 78"	90"	90"	90"	84"	90"	90"	90"
				For Shade Widths to 84"	84"	84"	84"	84"	84"	84"	84"
				For Shade Widths to 90"	78"	78"	78"	78"	78"	78"	78"
				For Shade Widths to 96"	72"	72"	72"	72"	72"	72"	72"

PRODUCT SIZE SPECIFICATIONS – REMOTELIFT™ ROLLUP 28 WIREFREE

Minimum and Maximum Standards

Please Note: Shade sizes that are wider than the fabric roll width indicated will be made with the fabric turned width for length (railroaded). The maximum width for non-railroaded shades is the roll width unless otherwise noted.

Minimum:	Width	Height
R28WF	17"	12"

Fabrics turned width for length will have a visible seam when fabricated longer than their maximum roll width less 10". Fabrics turned width for length may have an edge curl. This is not considered a defect in the product.

Material Name	Roll Width	Railroad Option	Splice /Seam		RemoteLift Shade without Top Treatment	RemoteLift with Deluxe Valance	RemoteLift with Fabric Valance	RemoteLift with Medium Cassette	RemoteLift with Large Cassette	RemoteLift with 3" Fascia	RemoteLift with 4" Fascia and Pocket Headrail
3% Sheerweave 4903	98"	NO	NO	Non-Railroaded							
				Maximum Width	96"	88"	88"	96"	96"	96"	96"
					Maximum Height						
				For Shade Widths to 54"	138"	138"	138"	90"	138"	126"	138"
				For Shade Widths to 60"	126"	126"	126"	90"	126"	126"	126"
				For Shade Widths to 66"	108"	108"	108"	90"	108"	108"	108"
				For Shade Widths to 72"	102"	102"	102"	90"	102"	102"	102"
				For Shade Widths to 78"	90"	90"	90"	90"	90"	90"	90"
				For Shade Widths to 84"	84"	84"	84"	84"	84"	84"	84"
				For Shade Widths to 88"	78"	78"	78"	78"	78"	78"	78"
				For Shade Widths to 90"	78"	NA	NA	78"	78"	78"	78"
				For Shade Widths to 96"	72"	NA	NA	72"	72"	72"	72"
3% Sheerweave 5000 *(R07_02, 04, 05, 07, 10)*	98"	NO	NO	Non-Railroaded							
				Maximum Width	96"	88"	88"	96"	96"	96"	96"
					Maximum Height						
				For Shade Widths to 60"	126"	72"	72"	42"	72"	66"	126"
				For Shade Widths to 72"	102"	72"	72"	42"	72"	66"	102"
				For Shade Widths to 78"	90"	72"	72"	42"	72"	66"	90"
				For Shade Widths to 84"	84"	72"	72"	42"	72"	66"	84"
				For Shade Widths to 88"	78"	72"	72"	42"	72"	66"	78"
				For Shade Widths to 90"	78"	NA	NA	42"	72"	66"	78"
				For Shade Widths to 96"	72"	NA	NA	42"	72"	66"	72"
3% Sheerweave 5000 *(R07_R11, R89, R90, R93, U10, U11)*	98"	NO	NO	Non-Railroaded							
				Maximum Width	96"	88"	88"	96"	96"	96"	96"
					Maximum Height						
				For Shade Widths to 54"	138"	78"	78"	48"	78"	72"	138"
				For Shade Widths to 60"	126"	78"	78"	48"	78"	72"	126"
				For Shade Widths to 66"	108"	78"	78"	48"	78"	72"	108"
				For Shade Widths to 72"	102"	78"	78"	48"	78"	72"	102"
				For Shade Widths to 78"	90"	78"	78"	48"	78"	72"	90"
				For Shade Widths to 84"	84"	78"	78"	48"	78"	72"	84"
				For Shade Widths to 88"	78"	78"	78"	48"	78"	72"	78"
				For Shade Widths to 90"	78"	N/A	N/A	48"	78"	72"	78"
				For Shade Widths to 96"	72"	N/A	N/A	48"	72"	72"	72"
3% T Screen	98"	YES	NO	Non-Railroaded							
				Maximum Width	98"	88"	88"	98"	98"	98"	98"
					Maximum Height						
				For Shade Widths to 66"	144"	144"	144"	108"	144"	144"	144"
				For Shade Widths to 72"	138"	138"	138"	108"	138"	138"	138"
				For Shade Widths to 84"	120"	120"	120"	108"	120"	120"	120"
				For Shade Widths to 88"	108"	108"	108"	108"	108"	108"	108"
				For Shade Widths to 90"	108"	NA	NA	108"	108"	108"	108"
				For Shade Widths to 96"	102"	NA	NA	102"	102"	102"	102"
				For Shade Widths to 98"	84"	NA	NA	84"	84"	84"	84"
				Railroaded							
				Maximum Width	108"	108"	108"	108"	108"	108"	108"
					Maximum Height						
				For Shade Widths to 96"	86"	86"	86"	86"	86"	86"	86"
				For Shade Widths to 102"	84"	84"	84"	84"	84"	84"	84"
				For Shade Widths to 108"	66"	66"	66"	66"	66"	66"	66"
4% S Screen	122"	NO	NO	Non-Railroaded							
				Maximum Width	96"	96"	96"	96"	96"	96"	96"
					Maximum Height						
				For Shade Widths to 60"	126"	120"	120"	72"	120"	102"	126"
				For Shade Widths to 72"	102"	102"	102"	72"	102"	102"	102"
				For Shade Widths to 78"	90"	90"	90"	72"	90"	90"	90"
				For Shade Widths to 84"	84"	84"	84"	72"	84"	84"	84"
				For Shade Widths to 90"	78"	78"	78"	72"	78"	78"	78"
				For Shade Widths to 96"	72"	72"	72"	72"	72"	72"	72"
4% Silver Screen	94"	YES	YES	Non-Railroaded							
				Maximum Width	94"	84"	84"	94"	94"	94"	94"
					Maximum Height						
				For Shade Widths to 66"	144"	144"	144"	144"	144"	144"	144"
				For Shade Widths to 72"	138"	138"	138"	138"	138"	138"	138"
				For Shade Widths to 84"	120"	120"	120"	120"	120"	120"	120"
				For Shade Widths to 90"	108"	NA	NA	108"	108"	108"	108"
				For Shade Widths to 94"	102"	NA	NA	102"	102"	102"	102"
				Railroaded							
				Maximum Width	102"	102"	102"	102"	102"	102"	102"
					Maximum Height						
				For Shade Widths to 66"	144"	144"	144"	144"	144"	144"	144"
				For Shade Widths to 72"	138"	138"	138"	138"	138"	138"	138"
				For Shade Widths to 84"	120"	120"	120"	120"	120"	120"	120"
				For Shade Widths to 90"	108"	108"	108"	108"	108"	108"	108"
				For Shade Widths to 94"	102"	102"	102"	102"	102"	102"	102"
				For Shade Widths to 102"	84"	84"	84"	84"	84"	84"	84"

PRODUCT SIZE SPECIFICATIONS – REMOTELIFT™ ROLLUP 28 WIREFREE

Minimum and Maximum Standards
Please Note: Shade sizes that are wider than the fabric roll width indicated will be made with the fabric turned width for length (railroaded). The maximum width for non-railroaded shades is the roll width unless otherwise noted.

Minimum:	Width	Height
R28WF	17"	12"

Fabrics turned width for length will have a visible seam when fabricated longer than their maximum roll width less 10". Fabrics turned width for length may have an edge curl. This is not considered a defect in the product.

Material Name	Roll Width	Railroad Option	Splice /Seam		RemoteLift Shade without Top Treatment	RemoteLift with Deluxe Valance	RemoteLift with Fabric Valance	RemoteLift with Medium Cassette	RemoteLift with Large Cassette	RemoteLift with 3" Fascia	RemoteLift with 4" Fascia and Pocket Headrail
5% E Screen	122"	YES	YES	Non-Railroaded							
				Maximum Width	102"	102"	102"	102"	102"	102"	102"
					Maximum Height						
				For Shade Widths to 66"	144"	144"	144"	144"	144"	144"	138"
				For Shade Widths to 72"	138"	138"	138"	138"	138"	138"	138"
				For Shade Widths to 84"	120"	120"	120"	120"	120"	120"	120"
				For Shade Widths to 90"	108"	108"	108"	108"	108"	108"	108"
				For Shade Widths to 96"	102"	102"	102"	102"	102"	102"	102"
				For Shade Widths to 102"	84"	84"	84"	84"	84"	84"	84"
				Railroaded							
				Maximum Width	102"	102"	102"	102"	102"	102"	102"
					Maximum Height						
				For Shade Widths to 66"	144"	144"	144"	144"	144"	144"	138"
				For Shade Widths to 72"	138"	138"	138"	138"	138"	138"	138"
				For Shade Widths to 84"	120"	120"	120"	120"	120"	120"	120"
				For Shade Widths to 90"	108"	108"	108"	108"	108"	108"	108"
				For Shade Widths to 96"	102"	102"	102"	102"	102"	102"	102"
				For Shade Widths to 102"	84"	84"	84"	84"	84"	84"	84"
5% M Screen Deco	98"	YES	YES	Non-Railroaded							
				Maximum Width	96"	88"	88"	96"	96"	96"	96"
					Maximum Height						
				For Shade Widths to 66"	144"	144"	144"	120"	144"	144"	144"
				For Shade Widths to 72"	138"	138"	138"	120"	138"	138"	138"
				For Shade Widths to 84"	120"	120"	120"	120"	120"	120"	120"
				For Shade Widths to 88"	108"	108"	108"	108"	108"	108"	108"
				For Shade Widths to 90"	108"	NA	NA	108"	108"	108"	108"
				For Shade Widths to 96"	102"	NA	NA	102"	102"	102"	102"
				Railroaded							
				Maximum Width	102"	102"	102"	102"	102"	102"	102"
					Maximum Height						
				For Shade Widths to 66"	144"	144"	144"	120"	144"	144"	144"
				For Shade Widths to 72"	138"	138"	138"	120"	138"	138"	138"
				For Shade Widths to 84"	120"	120"	120"	120"	120"	120"	120"
				For Shade Widths to 90"	108"	108"	108"	108"	108"	108"	108"
				For Shade Widths to 96"	102"	102"	102"	102"	102"	102"	102"
				For Shade Widths to 102"	84"	84"	84"	84"	84"	84"	84"
5% Sheerweave 2000	126"	NO	NO	Non-Railroaded							
				Maximum Width	96"	96"	96"	96"	96"	96"	96"
					Maximum Height						
				For Shade Widths to 54"	138"	138"	138"	132"	138"	138"	138"
				For Shade Widths to 60"	126"	126"	126"	126"	126"	126"	126"
				For Shade Widths to 66"	108"	108"	108"	108"	108"	108"	108"
				For Shade Widths to 72"	102"	102"	102"	102"	102"	102"	102"
				For Shade Widths to 78"	90"	90"	90"	90"	90"	90"	90"
				For Shade Widths to 84"	84"	84"	84"	84"	84"	84"	84"
				For Shade Widths to 90"	78"	78"	78"	78"	78"	78"	78"
				For Shade Widths to 96"	72"	72"	72"	72"	72"	72"	72"
				Railroaded							
				Maximum Width	96"	96"	96"	96"	96"	NA	NA
					Maximum Height						
				For Shade Widths to 54"	120"	120"	120"	120"	120"	120"	120"
				For Shade Widths to 60"	120"	120"	120"	120"	120"	120"	120"
				For Shade Widths to 66"	108"	108"	108"	108"	108"	108"	108"
				For Shade Widths to 72"	102"	102"	102"	102"	102"	102"	102"
				For Shade Widths to 78"	90"	90"	90"	90"	90"	90"	90"
				For Shade Widths to 84"	84"	84"	84"	84"	84"	84"	84"
				For Shade Widths to 90"	78"	78"	78"	78"	78"	78"	78"
				For Shade Widths to 96"	72"	72"	72"	72"	72"	72"	72"

PRODUCT SIZE SPECIFICATIONS – REMOTELIFT™ ROLLUP 28 WIREFREE

Minimum and Maximum Standards
Please Note: Shade sizes that are wider than the fabric roll width indicated will be made with the fabric turned width for length (railroaded). The maximum width for non-railroaded shades is the roll width unless otherwise noted.

Minimum:	Width	Height
R28WF	17"	12"

Fabrics turned width for length will have a visible seam when fabricated longer than their maximum roll width less 10". Fabrics turned width for length may have an edge curl. This is not considered a defect in the product.

Material Name	Roll Width	Railroad Option	Splice /Seam		RemoteLift Shade without Top Treatment	RemoteLift with Deluxe Valance	RemoteLift with Fabric Valance	RemoteLift with Medium Cassette	RemoteLift with Large Cassette	RemoteLift with 3" Fascia	RemoteLift with 4" Fascia and Pocket Headrail
5% Sheerweave 2390	126"	YES	YES	Non-Railroaded							
				Maximum Width	102"	102"	102"	102"	102"	102"	102"
					Maximum Height						
				For Shade Widths to 66"	144"	144"	144"	144"	144"	144"	144"
				For Shade Widths to 72"	138"	138"	138"	138"	138"	138"	138"
				For Shade Widths to 84"	120"	120"	120"	120"	120"	120"	120"
				For Shade Widths to 90"	108"	108"	108"	108"	108"	108"	108"
				For Shade Widths to 96"	102"	102"	102"	102"	102"	102"	102"
				For Shade Widths to 102"	84"	84"	84"	84"	84"	84"	84"
				Railroaded							
				Maximum Width	102"	102"	102"	102"	102"	102"	102"
					Maximum Height						
				For Shade Widths to 66"	144"	144"	144"	144"	144"	144"	144"
				For Shade Widths to 72"	138"	138"	138"	138"	138"	138"	138"
				For Shade Widths to 84"	120"	120"	120"	120"	120"	120"	120"
				For Shade Widths to 90"	108"	108"	108"	108"	108"	108"	108"
				For Shade Widths to 96"	102"	102"	102"	102"	102"	102"	102"
				For Shade Widths to 102"	84"	84"	84"	84"	84"	84"	84"
5% Sheerweave 2705	126"	NO	NO	Non-Railroaded							
				Maximum Width	98"	98"	NA	98"	98"	98"	98"
					Maximum Height						
				For Shade Widths to 66"	120"	120"	NA	102"	120"	120"	120"
				For Shade Widths to 72"	120"	120"	NA	102"	120"	120"	120"
				For Shade Widths to 78"	120"	120"	NA	102"	120"	120"	120"
				For Shade Widths to 84"	120"	120"	NA	102"	120"	120"	120"
				For Shade Widths to 90"	108"	N/A	NA	102"	108"	108"	108"
				For Shade Widths to 96"	102"	N/A	NA	102"	102"	102"	102"
				For Shade Widths to 98"	84"	NA	NA	84"	84"	84"	84"
5% Sheerweave 4000	126"	YES	YES	Non-Railroaded							
				Maximum Width	96"	96"	96"	96"	96"	96"	96"
					Maximum Height						
				For Shade Widths to 60"	126"	114"	114"	72"	114"	100"	126"
				For Shade Widths to 66"	108"	108"	108"	72"	108"	100"	108"
				For Shade Widths to 72"	102"	102"	102"	72"	102"	100"	102"
				For Shade Widths to 78"	90"	90"	90"	72"	90"	90"	90"
				For Shade Widths to 84"	84"	84"	84"	72"	84"	84"	84"
				For Shade Widths to 90"	78"	78"	78"	72"	78"	78"	78"
				For Shade Widths to 96"	72"	72"	72"	72"	72"	72"	72"
				Railroaded							
				Maximum Width	96"	96"	96"	96"	96"	96"	96"
					Maximum Height						
				For Shade Widths to 60"	126"	114"	114"	72"	114"	100"	126"
				For Shade Widths to 66"	108"	108"	108"	72"	108"	100"	108"
				For Shade Widths to 72"	102"	102"	102"	72"	102"	100"	102"
				For Shade Widths to 78"	90"	90"	90"	72"	90"	90"	90"
				For Shade Widths to 84"	84"	84"	84"	72"	84"	84"	84"
				For Shade Widths to 90"	78"	78"	78"	72"	78"	78"	78"
				For Shade Widths to 96"	72"	72"	72"	72"	72"	72"	72"
5% Sheerweave 4500	126"	YES	YES	Non-Railroaded							
				Maximum Width	96"	96"	96"	96"	96"	96"	96"
					Maximum Height						
				For Shade Widths to 54"	138"	138"	138"	108"	138"	138"	138"
				For Shade Widths to 60"	126"	126"	126"	108"	126"	126"	126"
				For Shade Widths to 66"	108"	108"	108"	108"	108"	108"	108"
				For Shade Widths to 72"	102"	102"	102"	102"	102"	102"	102"
				For Shade Widths to 78"	90"	90"	90"	90"	90"	90"	90"
				For Shade Widths to 84"	84"	84"	84"	84"	84"	84"	84"
				For Shade Widths to 90"	78"	78"	78"	78"	78"	78"	78"
				For Shade Widths to 96"	72"	72"	72"	72"	72"	72"	72"
				Railroaded							
				Maximum Width	96"	96"	96"	96"	96"	96"	96"
					Maximum Height						
				For Shade Widths to 54"	138"	138"	138"	108"	138"	138"	138"
				For Shade Widths to 60"	126"	126"	126"	108"	126"	126"	126"
				For Shade Widths to 66"	108"	108"	108"	108"	108"	108"	108"
				For Shade Widths to 72"	102"	102"	102"	102"	102"	102"	102"
				For Shade Widths to 78"	90"	90"	90"	90"	90"	90"	90"
				For Shade Widths to 84"	84"	84"	84"	84"	84"	84"	84"
				For Shade Widths to 90"	78"	78"	78"	78"	78"	78"	78"
				For Shade Widths to 96"	72"	72"	72"	72"	72"	72"	72"

PRODUCT SIZE SPECIFICATIONS – REMOTELIFT™ ROLLUP 28 WIREFREE

Minimum and Maximum Standards
Please Note: Shade sizes that are wider than the fabric roll width indicated will be made with the fabric turned width for length (railroaded). The maximum width for non-railroaded shades is the roll width unless otherwise noted.

Minimum:	Width	Height
R28WF	17"	12"

Fabrics turned width for length will have a visible seam when fabricated longer than their maximum roll width less 10". Fabrics turned width for length may have an edge curl. This is not considered a defect in the product.

Material Name	Roll Width	Railroad Option	Splice /Seam		RemoteLift Shade without Top Treatment	RemoteLift with Deluxe Valance	RemoteLift with Fabric Valance	RemoteLift with Medium Cassette	RemoteLift with Large Cassette	RemoteLift with 3" Fascia	RemoteLift with 4" Fascia and Pocket Headrail
5% Sheerweave 5000 *(R10_01, 03, 06, 07, 09, 10, 11, 12, 13,14, 15, 16, 17, 18, 19, 20, 21)*	98"	NO	NO	**Non-Railroaded**							
				Maximum Width	98"	88"	88"	98"	98"	98"	98"
					Maximum Height						
				For Shade Widths to 60"	126"	90"	90"	54"	90"	78"	126"
				For Shade Widths to 66"	108"	90"	90"	54"	90"	78"	108"
				For Shade Widths to 72"	102"	90"	90"	54"	90"	78"	102"
				For Shade Widths to 84"	84"	84"	84"	54"	84"	78"	84"
				For Shade Widths to 88"	78"	78"	78"	54"	78"	78"	78"
				For Shade Widths to 90"	78"	NA	NA	54"	78"	78"	78"
				For Shade Widths to 98"	60"	NA	NA	54"	60"	60"	60"
5% Sheerweave 5000 *(R10_Q51, S77, S84)*	98"	NO	NO	**Non-Railroaded**							
				Maximum Width	96"	88"	88"	96"	96"	96"	96"
					Maximum Height						
				For Shade Widths to 54"	138"	90"	90"	58"	90"	78"	138"
				For Shade Widths to 60"	126"	90"	90"	58"	90"	78"	126"
				For Shade Widths to 66"	108"	90"	90"	58"	90"	78"	108"
				For Shade Widths to 72"	102"	90"	90"	58"	90"	78"	102"
				For Shade Widths to 78"	90"	90"	90"	58"	90"	78"	90"
				For Shade Widths to 84"	84"	84"	84"	58"	84"	78"	84"
				For Shade Widths to 88"	78"	78"	78"	58"	78"	78"	78"
				For Shade Widths to 90"	78"	N/A	N/A	58"	78"	78"	78"
				For Shade Widths to 96"	72"	N/A	N/A	58"	72"	72"	72"
5% Sheerweave 5000 *(R10_Q43, S82)*	98"	NO	NO	**Non-Railroaded**							
				Maximum Width	96"	88"	88"	96"	96"	96"	96"
					Maximum Height						
				For Shade Widths to 54"	138"	102"	102"	66"	102"	90"	138"
				For Shade Widths to 60"	126"	102"	102"	66"	102"	90"	126"
				For Shade Widths to 66"	108"	102"	102"	66"	102"	90"	108"
				For Shade Widths to 72"	102"	102"	102"	66"	102"	90"	102"
				For Shade Widths to 78"	90"	90"	90"	66"	90"	90"	90"
				For Shade Widths to 84"	84"	84"	84"	66"	84"	84"	84"
				For Shade Widths to 88"	78"	78"	78"	66"	78"	78"	78"
				For Shade Widths to 90"	78"	N/A	N/A	66"	78"	78"	78"
				For Shade Widths to 96"	72"	N/A	N/A	66"	72"	72"	72"
7% Global Screen	118"	YES	YES	**Non-Railroaded**							
				Maximum Width	108"	108"	108"	108"	108"	108"	108"
					Maximum Height						
				For Shade Widths to 66"	144"	144"	144"	126"	144"	144"	144"
				For Shade Widths to 72"	138"	138"	138"	126"	138"	138"	138"
				For Shade Widths to 78"	126"	126"	126"	126"	126"	126"	126"
				For Shade Widths to 84"	120"	120"	120"	120"	120"	120"	120"
				For Shade Widths to 90"	108"	108"	108"	108"	108"	108"	108"
				For Shade Widths to 96"	102"	102"	102"	102"	102"	102"	102"
				For Shade Widths to 102"	84"	84"	84"	84"	84"	84"	84"
				For Shade Widths to 108"	66"	66"	66"	66"	66"	66"	66"
				Railroaded							
				Maximum Width	108"	108"	108"	108"	108"	108"	108"
					Maximum Height						
				For Shade Widths to 66"	144"	144"	144"	126"	144"	144"	144"
				For Shade Widths to 72"	138"	138"	138"	126"	138"	138"	138"
				For Shade Widths to 78"	126"	126"	126"	126"	126"	126"	126"
				For Shade Widths to 84"	120"	120"	120"	120"	120"	120"	120"
				For Shade Widths to 90"	108"	108"	108"	108"	108"	108"	108"
				For Shade Widths to 96"	102"	102"	102"	102"	102"	102"	102"
				For Shade Widths to 102"	84"	84"	84"	84"	84"	84"	84"
				For Shade Widths to 108"	66"	66"	66"	66"	66"	66"	66"

PRODUCT SIZE SPECIFICATIONS – REMOTELIFT™ ROLLUP 28 WIREFREE

Minimum and Maximum Standards
Please Note: Shade sizes that are wider than the fabric roll width indicated will be made with the fabric turned width for length (railroaded). The maximum width for non-railroaded shades is the roll width unless otherwise noted.

Minimum:	Width	Height
R28WF	17"	12"

Fabrics turned width for length will have a visible seam when fabricated longer than their maximum roll width less 10". Fabrics turned width for length may have an edge curl. This is not considered a defect in the product.

Material Name	Roll Width	Railroad Option	Splice /Seam		RemoteLift Shade without Top Treatment	RemoteLift with Deluxe Valance	RemoteLift with Fabric Valance	RemoteLift with Medium Cassette	RemoteLift with Large Cassette	RemoteLift with 3" Fascia	RemoteLift with 4" Fascia and Pocket Headrail
7% Sheerweave 5000 *(R34_Q46)*	**98"**	**NO**	**NO**	**Non-Railroaded**							
				Maximum Width	**96"**	**88"**	**88"**	**96"**	**96"**	**96"**	**96"**
					Maximum Height						
				For Shade Widths to 60"	126"	102"	102"	66"	102"	90"	126"
				For Shade Widths to 66"	108"	102"	102"	66"	102"	90"	108"
				For Shade Widths to 72"	102"	102"	102"	66"	102"	90"	102"
				For Shade Widths to 84"	84"	84"	84"	66"	84"	84"	84"
				For Shade Widths to 88"	78"	78"	78"	66"	78"	78"	78"
				For Shade Widths to 90"	78"	NA	NA	66"	78"	78"	78"
				For Shade Widths to 96"	72"	NA	NA	66"	72"	72"	72"
7% Sheerweave 5000 *(R34_08, 09)*	**98"**	**NO**	**NO**	**Non-Railroaded**							
				Maximum Width	**96"**	**88"**	**88"**	**96"**	**96"**	**96"**	**96"**
					Maximum Height						
				For Shade Widths to 60"	126"	126"	126"	78"	126"	108"	126"
				For Shade Widths to 66"	108"	108"	108"	78"	108"	108"	108"
				For Shade Widths to 72"	102"	102"	102"	78"	102"	102"	102"
				For Shade Widths to 84"	84"	84"	84"	78"	84"	84"	84"
				For Shade Widths to 88"	78"	78"	78"	78"	78"	78"	78"
				For Shade Widths to 90"	78"	NA	NA	78"	78"	78"	78"
				For Shade Widths to 96"	72"	NA	NA	72"	72"	72"	72"
7% Sheerweave 5000 *(R34_S73)*	**98"**	**NO**	**NO**	**Non-Railroaded**							
				Maximum Width	**96"**	**88"**	**88"**	**96"**	**96"**	**96"**	**96"**
					Maximum Height						
				For Shade Widths to 54"	138"	96"	96"	60"	96"	84"	138"
				For Shade Widths to 60"	126"	96"	96"	60"	96"	84"	126"
				For Shade Widths to 66"	108"	96"	96"	60"	96"	84"	108"
				For Shade Widths to 72"	102"	96"	96"	60"	96"	84"	102"
				For Shade Widths to 78"	90"	90"	90"	60"	90"	84"	90"
				For Shade Widths to 84"	84"	84"	84"	60"	84"	84"	84"
				For Shade Widths to 88"	78"	78"	78"	60"	78"	78"	78"
				For Shade Widths to 90"	78"	N/A	N/A	60"	78"	78"	78"
				For Shade Widths to 96"	72"	N/A	N/A	60"	72"	72"	72"
10% E Screen	**122"**	**YES**	**YES**	**Non-Railroaded**							
				Maximum Width	**102"**	**102"**	**102"**	**102"**	**102"**	**102"**	**102"**
					Maximum Height						
				For Shade Widths to 66"	144"	144"	144"	138"	144"	144"	144"
				For Shade Widths to 72"	138"	138"	138"	138"	138"	138"	138"
				For Shade Widths to 84"	120"	120"	120"	120"	120"	120"	120"
				For Shade Widths to 90"	108"	108"	108"	108"	108"	108"	108"
				For Shade Widths to 96"	102"	102"	102"	102"	102"	102"	102"
				For Shade Widths to 102"	84"	84"	84"	84"	84"	84"	84"
				Railroaded							
				Maximum Width	**102"**	**102"**	**102"**	**102"**	**102"**	**102"**	**102"**
					Maximum Height						
				For Shade Widths to 66"	144"	144"	144"	138"	144"	144"	144"
				For Shade Widths to 72"	138"	138"	138"	138"	138"	138"	138"
				For Shade Widths to 84"	120"	120"	120"	120"	120"	120"	120"
				For Shade Widths to 90"	108"	108"	108"	108"	108"	108"	108"
				For Shade Widths to 96"	102"	102"	102"	102"	102"	102"	102"
				For Shade Widths to 102"	84"	84"	84"	84"	84"	84"	84"
10% Sheerweave 2360	**126"**	**NO**	**NO**	**Non-Railroaded**							
				Maximum Width	**102"**	**102"**	**102"**	**102"**	**102"**	**102"**	**102"**
					Maximum Height						
				For Shade Widths to 66"	144"	144"	144"	138"	144"	144"	144"
				For Shade Widths to 72"	138"	138"	138"	138"	138"	138"	138"
				For Shade Widths to 78"	126"	126"	126"	126"	126"	126"	126"
				For Shade Widths to 84"	120"	120"	120"	120"	120"	120"	120"
				For Shade Widths to 90"	108"	108"	108"	108"	108"	108"	108"
				For Shade Widths to 96"	102"	102"	102"	102"	102"	102"	102"
				For Shade Widths to 102"	84"	84"	84"	84"	84"	84"	84"

PRODUCT SIZE SPECIFICATIONS – REMOTELIFT™ ROLLUP 28 WIREFREE

Minimum and Maximum Standards
Please Note: Shade sizes that are wider than the fabric roll width indicated will be made with the fabric turned width for length (railroaded). The maximum width for non-railroaded shades is the roll width unless otherwise noted.

Minimum:	Width	Height
R28WF	17"	12"

Fabrics turned width for length will have a visible seam when fabricated longer than their maximum roll width less 10". Fabrics turned width for length may have an edge curl. This is not considered a defect in the product.

Material Name	Roll Width	Railroad Option	Splice /Seam		RemoteLift Shade without Top Treatment	RemoteLift with Deluxe Valance	RemoteLift with Fabric Valance	RemoteLift with Medium Cassette	RemoteLift with Large Cassette	RemoteLift with 3" Fascia	RemoteLift with 4" Fascia and Pocket Headrail
10% Sheerweave 4100	**98"**	**YES**	**YES**	**Non-Railroaded**							
				Maximum Width	**96"**	**88"**	**88"**	**96"**	**96"**	**96"**	**96"**
					Maximum Height						
				For Shade Widths to 54"	138"	120"	120"	78"	120"	108"	108"
				For Shade Widths to 60"	126"	120"	120"	78"	120"	108"	108"
				For Shade Widths to 66"	108"	108"	108"	78"	108"	108"	108"
				For Shade Widths to 72"	102"	102"	102"	78"	102"	102"	102"
				For Shade Widths to 78"	90"	90"	90"	78"	90"	90"	90"
				For Shade Widths to 84"	84"	84"	84"	78"	84"	84"	84"
				For Shade Widths to 88"	78"	78"	78"	78"	78"	78"	78"
				For Shade Widths to 90"	78"	N/A	N/A	78"	78"	78"	78"
				For Shade Widths to 96"	72"	N/A	N/A	72"	72"	72"	72"
				Railroaded							
				Maximum Width	**96"**	**96"**	**96"**	**96"**	**96"**	**96"**	**96"**
					Maximum Height						
				For Shade Widths to 54"	120"	120"	120"	78"	120"	108"	108"
				For Shade Widths to 60"	120"	120"	120"	78"	120"	108"	108"
				For Shade Widths to 66"	108"	108"	108"	78"	108"	108"	108"
				For Shade Widths to 72"	102"	102"	102"	78"	102"	102"	102"
				For Shade Widths to 78"	90"	90"	90"	78"	90"	90"	90"
				For Shade Widths to 84"	84"	84"	84"	78"	84"	84"	84"
				For Shade Widths to 90"	78"	78"	78"	78"	78"	78"	78"
				For Shade Widths to 96"	72"	72"	72"	72"	72"	72"	72"
10% Sheerweave 5000 *(R26_03)*	**98"**	**NO**	**NO**	**Non-Railroaded**							
				Maximum Width	**96"**	**88"**	**88"**	**96"**	**96"**	**96"**	**96"**
					Maximum Height						
				For Shade Widths to 60"	126"	90"	90"	54"	90"	78"	126"
				For Shade Widths to 66"	108"	90"	90"	54"	90"	78"	108"
				For Shade Widths to 72"	102"	90"	90"	54"	90"	78"	102"
				For Shade Widths to 84"	84"	84"	84"	54"	84"	78"	84"
				For Shade Widths to 88"	78"	78"	78"	54"	78"	78"	78"
				For Shade Widths to 90"	78"	NA	NA	54"	78"	78"	78"
				For Shade Widths to 98"	60"	NA	NA	54"	60"	60"	60"
10% Sheerweave 5000 *(R26_U16, U24, U28, U29)*	**98"**	**NO**	**NO**	**Non-Railroaded**							
				Maximum Width	**96"**	**88"**	**88"**	**96"**	**96"**	**96"**	**96"**
					Maximum Height						
				For Shade Widths to 54"	138"	102"	102"	66"	102"	90"	138"
				For Shade Widths to 60"	126"	102"	102"	66"	102"	90"	126"
				For Shade Widths to 66"	108"	102"	102"	66"	102"	90"	108"
				For Shade Widths to 72"	102"	102"	102"	66"	102"	90"	102"
				For Shade Widths to 78"	90"	90"	90"	66"	90"	90"	90"
				For Shade Widths to 84"	84"	84"	84"	66"	84"	84"	84"
				For Shade Widths to 88"	78"	78"	78"	66"	78"	78"	78"
				For Shade Widths to 90"	78"	N/A	N/A	66"	78"	78"	78"
				For Shade Widths to 96"	72"	N/A	N/A	66"	72"	72"	72"

PRODUCT SIZE SPECIFICATIONS – REMOTELIFT™ ROLLUP 28 WIREFREE

Minimum and Maximum Standards
Please Note: Shade sizes that are wider than the fabric roll width indicated will be made with the fabric turned width for length (railroaded). The maximum width for non-railroaded shades is the roll width unless otherwise noted.

Minimum:	Width	Height
R28WF	17"	12"

Fabrics turned width for length will have a visible seam when fabricated longer than their maximum roll width less 10". Fabrics turned width for length may have an edge curl. This is not considered a defect in the product.

Material Name	Roll Width	Railroad Option	Splice /Seam		RemoteLift Shade without Top Treatment	RemoteLift with Deluxe Valance	RemoteLift with Fabric Valance	RemoteLift with Medium Cassette	RemoteLift with Large Cassette	RemoteLift with 3" Fascia	RemoteLift with 4" Fascia and Pocket Headrail
Alexandria	78"	NO	NO	Non-Railroaded							
				Maximum Width	78"	66"	66"	78"	78"	78"	78"
					Maximum Height						
				For Shade Widths to 66"	144"	144"	144"	144"	144"	144"	144"
				For Shade Widths to 78"	144"	NA	NA	144"	144"	144"	144"
Astaire	94"	NO	NO	Maximum Width	94"	NA	NA	94"	94"	94"	94"
					Maximum Height						
				For Shade Widths to 94"	144"	NA	NA	72"	120"	102"	144"
Avila R Blackout	118"	YES	YES	Non-Railroaded							
				Maximum Width	102"	102"	102"	102"	102"	102"	102"
					Maximum Height						
				For Shade Widths to 66"	144"	144"	144"	144"	144"	144"	144"
				For Shade Widths to 72"	138"	138"	138"	138"	138"	138"	138"
				For Shade Widths to 84"	120"	120"	120"	120"	120"	120"	120"
				For Shade Widths to 90"	108"	108"	108"	108"	108"	108"	108"
				For Shade Widths to 96"	102"	102"	102"	102"	102"	102"	102"
				For Shade Widths to 102"	84"	84"	84"	84"	84"	84"	84"
				Railroaded							
				Maximum Width	102"	102"	102"	102"	102"	102"	102"
					Maximum Height						
				For Shade Widths to 84"	120"	120"	120"	120"	120"	120"	120"
				For Shade Widths to 90"	108"	108"	108"	108"	108"	108"	108"
				For Shade Widths to 96"	102"	102"	102"	102"	102"	102"	102"
				For Shade Widths to 102"	84"	84"	84"	84"	84"	84"	84"
Baroque	78"	NO	NO	Non-Railroaded							
				Maximum Width	78"	66"	66"	78"	78"	78"	78"
					Maximum Height						
				For Shade Widths to 66"	144"	144"	144"	144"	144"	144"	144"
				For Shade Widths to 72"	138"	NA	NA	138"	138"	138"	138"
				For Shade Widths to 78"	126"	NA	NA	126"	126"	126"	126"
Blackout - Solid	72"	YES	YES	Non-Railroaded							
				Maximum Width	72"	60"	60"	72"	72"	72"	72"
					Maximum Height						
				For Shade Widths to 60"	144"	144"	NA	144"	144"	144"	144"
				For Shade Widths to 66"	144"	NA	NA	144"	144"	144"	144"
				For Shade Widths to 72"	138"	NA	NA	138"	138"	138"	138"
				Railroaded							
				Maximum Width	108"	108"	108"	108"	108"	108"	108"
					Maximum Height						
				For Shade Widths to 66"	144"	144"	NA	144"	144"	144"	144"
				For Shade Widths to 72"	138"	138"	NA	138"	138"	138"	138"
				For Shade Widths to 84"	120"	120"	NA	120"	120"	120"	120"
				For Shade Widths to 90"	108"	108"	NA	108"	108"	108"	108"
				For Shade Widths to 96"	102"	102"	NA	102"	102"	102"	102"
				For Shade Widths to 102"	84"	84"	NA	84"	84"	84"	84"
				For Shade Widths to 108"	66"	66"	NA	66"	66"	66"	66"
Brilliance	118"	NO	NO	Non-Railroaded							
				Maximum Width	114"	108"	108"	114"	114"	114"	114"
					Maximum Height						
				For Shade Widths to 102"	144"	144"	144"	144"	144"	144"	144"
				For Shade Widths to 108"	108"	108"	108"	108"	108"	108"	108"
				For Shade Widths to 114"	84"	NA	NA	84"	84"	84"	84"
Brilliance Blackout	118"	NO	NO	Non-Railroaded							
				Maximum Width	102"	102"	102"	102"	102"	102"	102"
					Maximum Height						
				For Shade Widths to 66"	144"	144"	144"	114"	144"	144"	144"
				For Shade Widths to 72"	138"	138"	138"	114"	138"	138"	138"
				For Shade Widths to 84"	120"	120"	120"	114"	120"	120"	120"
				For Shade Widths to 90"	108"	108"	108"	108"	108"	108"	108"
				For Shade Widths to 96"	102"	102"	102"	102"	102"	102"	102"
				For Shade Widths to 102"	84"	84"	84"	84"	84"	84"	84"

PRODUCT SIZE SPECIFICATIONS – REMOTELIFT™ ROLLUP 28 WIREFREE

Minimum and Maximum Standards
Please Note: Shade sizes that are wider than the fabric roll width indicated will be made with the fabric turned width for length (railroaded). The maximum width for non-railroaded shades is the roll width unless otherwise noted.

Minimum:	Width	Height
R28WF	17"	12"

Fabrics turned width for length will have a visible seam when fabricated longer than their maximum roll width less 10". Fabrics turned width for length may have an edge curl. This is not considered a defect in the product.

Material Name	Roll Width	Railroad Option	Splice /Seam		RemoteLift Shade without Top Treatment	RemoteLift with Deluxe Valance	RemoteLift with Fabric Valance	RemoteLift with Medium Cassette	RemoteLift with Large Cassette	RemoteLift with 3" Fascia	RemoteLift with 4" Fascia and Pocket Headrail
Carrara	110"	NO	NO	Non-Railroaded							
				Maximum Width	110"	100"	100"	110"	110"	110"	110"
					Maximum Height						
				For Shade Widths to 66"	144"	144"	144"	144"	144"	144"	144"
				For Shade Widths to 78"	126"	126"	126"	126"	126"	126"	126"
				For Shade Widths to 90"	108"	108"	108"	108"	108"	108"	108"
				For Shade Widths to 100"	84"	84"	84"	84"	84"	84"	84"
				For Shade Widths to 102"	84"	NA	NA	84"	84"	84"	84"
				For Shade Widths to 108"	66"	NA	NA	66"	66"	66"	66"
				For Shade Widths to 110"	48"	NA	NA	48"	48"	48"	48"
Carrara Blackout	110"	NO	NO	Non-Railroaded							
				Maximum Width	96"	96"	96"	96"	96"	96"	96"
					Maximum Height						
				For Shade Widths to 60"	126"	126"	126"	96"	126"	126"	126"
				For Shade Widths to 72"	102"	102"	102"	96"	102"	102"	102"
				For Shade Widths to 78"	90"	90"	90"	90"	90"	90"	90"
				For Shade Widths to 84"	84"	84"	84"	84"	84"	84"	84"
				For Shade Widths to 90"	78"	78"	78"	78"	78"	78"	78"
				For Shade Widths to 96"	72"	72"	72"	72"	72"	72"	72"
Claudio	110"	NO	NO	Non-Railroaded							
				Maximum Width	110"	100"	100"	110"	110"	110"	110"
					Maximum Height						
				For Shade Widths to 100"	144"	144"	144"	144"	144"	144"	144"
				For Shade Widths to 102"	144"	NA	NA	144"	144"	144"	144"
				For Shade Widths to 110"	84"	NA	NA	84"	84"	84"	84"
Claudio Blackout	110"	NO	NO	Non-Railroaded							
				Maximum Width	102"	100"	100"	102"	102"	102"	102"
					Maximum Height						
				For Shade Widths to 66"	144"	144"	144"	114"	144"	144"	144"
				For Shade Widths to 72"	138"	138"	138"	114"	138"	138"	138"
				For Shade Widths to 78"	126"	126"	126"	114"	126"	126"	126"
				For Shade Widths to 84"	120"	120"	120"	114"	120"	120"	120"
				For Shade Widths to 90"	108"	108"	108"	108"	108"	108"	108"
				For Shade Widths to 96"	102"	102"	102"	102"	102"	102"	102"
				For Shade Widths to 100"	84"	84"	84"	84"	84"	84"	84"
				For Shade Widths to 102"	84"	NA	NA	84"	84"	84"	84"
Cusco	110"	YES	YES	Non-Railroaded							
				Maximum Width	102"	100"	100"	102"	102"	102"	102"
					Maximum Height						
				For Shade Widths to 66"	144"	144"	144"	130"	144"	144"	144"
				For Shade Widths to 72"	138"	138"	138"	130"	138"	138"	138"
				For Shade Widths to 84"	120"	120"	120"	120"	120"	120"	120"
				For Shade Widths to 90"	108"	108"	108"	108"	108"	108"	108"
				For Shade Widths to 96"	102"	102"	102"	102"	102"	102"	102"
				For Shade Widths to 100"	84"	84"	84"	84"	84"	84"	84"
				For Shade Widths to 102"	84"	NA	NA	84"	84"	84"	84"
				Railroaded							
				Maximum Width	102"	102"	102"	102"	102"	102"	102"
					Maximum Height						
				For Shade Widths to 66"	144"	144"	144"	130"	144"	144"	144"
				For Shade Widths to 72"	138"	138"	138"	130"	138"	138"	138"
				For Shade Widths to 84"	120"	120"	120"	120"	120"	120"	120"
				For Shade Widths to 90"	108"	108"	108"	108"	108"	108"	108"
				For Shade Widths to 96"	102"	102"	102"	102"	102"	102"	102"
				For Shade Widths to 102"	84"	84"	84"	84"	84"	84"	84"
Darien	90"	NO	NO	Non-Railroaded							
				Maximum Width	90"	80"	80"	90"	90"	90"	90"
					Maximum Height						
				For Shade Widths to 80"	144"	144"	144"	144"	144"	144"	144"
				For Shade Widths to 90"	144"	NA	NA	144"	144"	144"	144"

PRODUCT SIZE SPECIFICATIONS – REMOTELIFT™ ROLLUP 28 WIREFREE

Minimum and Maximum Standards
Please Note: Shade sizes that are wider than the fabric roll width indicated will be made with the fabric turned width for length (railroaded). The maximum width for non-railroaded shades is the roll width unless otherwise noted.

Minimum:	Width	Height
R28WF	17"	12"

Fabrics turned width for length will have a visible seam when fabricated longer than their maximum roll width less 10". Fabrics turned width for length may have an edge curl. This is not considered a defect in the product.

Material Name	Roll Width	Railroad Option	Splice /Seam		RemoteLift Shade without Top Treatment	RemoteLift with Deluxe Valance	RemoteLift with Fabric Valance	RemoteLift with Medium Cassette	RemoteLift with Large Cassette	RemoteLift with 3" Fascia	RemoteLift with 4" Fascia and Pocket Headrail
Drizzle	94"	YES	YES	Non-Railroaded							
				Maximum Width	94"	84"	84"	94"	94"	94"	94"
					Maximum Height						
				For Shade Widths to 66"	144"	144"	144"	144"	144"	144"	144"
				For Shade Widths to 78"	144"	144"	144"	144"	144"	144"	144"
				For Shade Widths to 84"	144"	144"	144"	144"	144"	144"	144"
				For Shade Widths to 90"	144"	NA	NA	144"	144"	144"	144"
				For Shade Widths over 90"	144"	NA	NA	144"	144"	144"	144"
				Railroaded							
				Maximum Width	114"	114"	114"	114"	114"	114"	114"
					Maximum Height						
				For Shade Widths to 102"	120"	120"	120"	120"	120"	120"	120"
				For Shade Widths to 108"	108"	108"	108"	108"	108"	108"	108"
				For Shade Widths to 114"	84"	84"	84"	84"	84"	84"	84"
Fiona	78"	NO	NO	Non-Railroaded							
				Maximum Width	78"	70"	70"	78"	78"	78"	78"
					Maximum Height						
				For Shade Widths to 66"	144"	144"	144"	144"	144"	144"	144"
				For Shade Widths to 70"	138"	138"	138"	138"	138"	138"	138"
				For Shade Widths to 72"	138"	NA	NA	138"	138"	138"	138"
				For Shade Widths to 78"	126"	NA	NA	126"	126"	126"	126"
Flocke Blackout	94"	YES	YES	Non-Railroaded							
				Maximum Width	94"	84"	84"	94"	94"	94"	94"
					Maximum Height						
				For Shade Widths to 66"	108"	108"	108"	108"	108"	108"	108"
				For Shade Widths to 72"	102"	102"	102"	102"	102"	102"	102"
				For Shade Widths to 84"	84"	84"	84"	84"	84"	84"	84"
				For Shade Widths to 90"	78"	NA	NA	78"	78"	78"	78"
				For Shade Widths to 94"	72"	NA	NA	72"	72"	72"	72"
				Railroaded							
				Maximum Width	102"	102"	102"	102"	102"	102"	102"
					Maximum Height						
				For Shade Widths to 66"	108"	108"	108"	108"	108"	108"	108"
				For Shade Widths to 72"	102"	102"	102"	102"	102"	102"	102"
				For Shade Widths to 84"	84"	84"	84"	84"	84"	84"	84"
				For Shade Widths to 90"	78"	78"	78"	78"	78"	78"	78"
				For Shade Widths to 96"	72"	72"	72"	72"	72"	72"	72"
				For Shade Widths to 102"	60"	60"	60"	60"	60"	60"	60"
Hayworth	98"	YES	YES	Non-Railroaded							
				Maximum Width	98"	88"	88"	98"	98"	98"	98"
					Maximum Height						
				For Shade Widths to 88"	144"	144"	144"	144"	144"	144"	144"
				For Shade Widths to 98"	144"	NA	NA	144"	144"	144"	144"
				Railroaded							
				Maximum Width	114"	114"	114"	114"	114"	114"	114"
					Maximum Height						
				For Shade Widths to 102"	144"	144"	144"	144"	144"	144"	144"
				For Shade Widths to 108"	108"	108"	108"	108"	108"	108"	108"
				For Shade Widths to 114"	84"	84"	84"	84"	84"	84"	84"
Illusion	72"	YES	NO	Non-Railroaded							
				Maximum Width	72"	60"	60"	72"	72"	72"	72"
					Maximum Height						
				For Shade Widths to 60"	144"	144"	144"	144"	144"	144"	144"
				For Shade Widths to 72"	144"	NA	NA	144"	144"	144"	144"
				Railroaded							
				Maximum Width	114"	114"	114"	114"	114"	114"	114"
					Maximum Height						
				For Shade Widths to 114"	60"	60"	60"	60"	60"	60"	60"

PRODUCT SIZE SPECIFICATIONS – REMOTELIFT™ ROLLUP 28 WIREFREE

Minimum and Maximum Standards
Please Note: Shade sizes that are wider than the fabric roll width indicated will be made with the fabric turned width for length (railroaded). The maximum width for non-railroaded shades is the roll width unless otherwise noted.

Minimum:	Width	Height
R28WF	17"	12"

Fabrics turned width for length will have a visible seam when fabricated longer than their maximum roll width less 10". Fabrics turned width for length may have an edge curl. This is not considered a defect in the product.

Material Name	Roll Width	Railroad Option	Splice /Seam		RemoteLift Shade without Top Treatment	RemoteLift with Deluxe Valance	RemoteLift with Fabric Valance	RemoteLift with Medium Cassette	RemoteLift with Large Cassette	RemoteLift with 3" Fascia	RemoteLift with 4" Fascia and Pocket Headrail
Jasper	110"	YES	YES	Non-Railroaded							
				Maximum Width	108"	100"	100"	108"	108"	108"	108"
					Maximum Height						
				For Shade Widths to 66"	144"	144"	144"	144"	144"	144"	144"
				For Shade Widths to 72"	138"	138"	138"	138"	138"	138"	138"
				For Shade Widths to 84"	120"	120"	120"	120"	120"	120"	120"
				For Shade Widths to 90"	108"	108"	108"	108"	108"	108"	108"
				For Shade Widths to 96"	102"	102"	102"	102"	102"	102"	102"
				For Shade Widths to 100"	84"	84"	84"	84"	84"	84"	84"
				For Shade Widths to 102"	84"	NA	NA	84"	84"	84"	84"
				For Shade Widths to 108"	66"	NA	NA	66"	66"	66"	66"
				Railroaded							
				Maximum Width	114"	114"	114"	114"	114"	114"	114"
					Maximum Height						
				For Shade Widths to 66"	144"	144"	144"	144"	144"	144"	144"
				For Shade Widths to 72"	138"	138"	138"	138"	138"	138"	138"
				For Shade Widths to 84"	120"	120"	120"	120"	120"	120"	120"
				For Shade Widths to 90"	108"	108"	108"	108"	108"	108"	108"
				For Shade Widths to 96"	102"	102"	102"	102"	102"	102"	102"
				For Shade Widths to 102"	84"	84"	84"	84"	84"	84"	84"
				For Shade Widths to 108"	66"	66"	66"	66"	66"	66"	66"
				For Shade Widths to 114"	48"	48"	48"	48"	48"	48"	48"
Linview	122"	YES	YES	Non-Railroaded							
				Maximum Width	108"	108"	108"	108"	108"	108"	108"
					Maximum Height						
				For Shade Widths to 96"	144"	144"	144"	144"	144"	144"	144"
				For Shade Widths to 102"	144"	144"	144"	144"	144"	144"	144"
				For Shade Widths to 108"	108"	108"	108"	108"	108"	108"	108"
				Railroaded							
				Maximum Width	108"	108"	108"	108"	108"	108"	108"
					Maximum Height						
				For Shade Widths to 96"	120"	120"	120"	120"	120"	120"	120"
				For Shade Widths to 102"	120"	120"	120"	120"	120"	120"	120"
				For Shade Widths to 108"	108"	108"	108"	108"	108"	108"	108"
Linview Blackout	94"	NO	NO	Non-Railroaded							
				Maximum Width	94"	84"	84"	94"	94"	94"	94"
					Maximum Height						
				For Shade Widths to 66"	144"	144"	144"	144"	144"	144"	144"
				For Shade Widths to 72"	138"	138"	138"	138"	138"	138"	138"
				For Shade Widths to 84"	120"	120"	120"	120"	120"	120"	120"
				For Shade Widths to 90"	108"	NA	NA	108"	108"	108"	108"
				For Shade Widths to 94"	102"	NA	NA	102"	102"	102"	102"
Montero	94"	NO	NO	Non-Railroaded							
				Maximum Width	94"	84"	84"	94"	94"	94"	94"
					Maximum Height						
				For Shade Widths to 72"	138"	138"	138"	132"	138"	138"	138"
				For Shade Widths to 84"	120"	120"	120"	120"	120"	120"	120"
				For Shade Widths to 90"	108"	NA	NA	108"	108"	108"	108"
				For Shade Widths to 94"	102"	NA	NA	102"	102"	102"	102"
Moravia	96"	NO	NO	Non-Railroaded							
				Maximum Width	96"	84"	84"	96"	96"	96"	96"
					Maximum Height						
				For Shade Widths to 84"	144"	144"	144"	138"	144"	144"	144"
				For Shade Widths to 96"	144"	NA	NA	138"	144"	144"	144"

PRODUCT SIZE SPECIFICATIONS – REMOTELIFT™ ROLLUP 28 WIREFREE

Minimum and Maximum Standards
Please Note: Shade sizes that are wider than the fabric roll width indicated will be made with the fabric turned width for length (railroaded). The maximum width for non-railroaded shades is the roll width unless otherwise noted.

Minimum:	Width	Height
R28WF	17"	12"

Fabrics turned width for length will have a visible seam when fabricated longer than their maximum roll width less 10". Fabrics turned width for length may have an edge curl. This is not considered a defect in the product.

Material Name	Roll Width	Railroad Option	Splice /Seam		RemoteLift Shade without Top Treatment	RemoteLift with Deluxe Valance	RemoteLift with Fabric Valance	RemoteLift with Medium Cassette	RemoteLift with Large Cassette	RemoteLift with 3" Fascia	RemoteLift with 4" Fascia and Pocket Headrail
Santa Cruz	94"	NO	NO	Non-Railroaded							
				Maximum Width	94"	84"	84"	94"	94"	94"	94"
					Maximum Height						
				For Shade Widths to 72"	138"	138"	138"	138"	138"	138"	138"
				For Shade Widths to 84"	120"	120"	120"	120"	120"	120"	120"
				For Shade Widths to 90"	108"	NA	NA	108"	108"	108"	108"
				For Shade Widths to 94"	102"	NA	NA	102"	102"	102"	102"
Santa Cruz Blackout	94"	NO	NO	Non-Railroaded							
				Maximum Width	94"	84"	84"	94"	94"	94"	94"
					Maximum Height						
				For Shade Widths to 60"	126"	126"	126"	102"	126"	126"	126"
				For Shade Widths to 72"	102"	102"	102"	102"	102"	102"	102"
				For Shade Widths to 78"	90"	90"	90"	90"	90"	90"	90"
				For Shade Widths to 84"	84"	84"	84"	84"	84"	84"	84"
				For Shade Widths to 90"	78"	NA	NA	78"	78"	78"	78"
				For Shade Widths to 94"	72"	NA	NA	72"	72"	72"	72"
Scala Blackout	110"	YES	YES	Non-Railroaded							
				Maximum Width	102"	96"	96"	102"	102"	102"	102"
					Maximum Height						
				For Shade Widths to 66"	144"	144"	NA	144"	144"	144"	144"
				For Shade Widths to 72"	138"	138"	NA	138"	138"	138"	138"
				For Shade Widths to 84"	120"	120"	NA	120"	120"	120"	120"
				For Shade Widths to 90"	108"	108"	NA	108"	108"	108"	108"
				For Shade Widths to 96"	102"	102"	NA	102"	102"	102"	102"
				For Shade Widths to 102"	84"	NA	NA	84"	84"	84"	84"
				Railroaded							
				Maximum Width	102"	102"	102"	102"	102"	102"	102"
					Maximum Height						
				For Shade Widths to 66"	144"	144"	NA	144"	144"	144"	144"
				For Shade Widths to 72"	138"	138"	NA	138"	138"	138"	138"
				For Shade Widths to 84"	120"	120"	NA	120"	120"	120"	120"
				For Shade Widths to 90"	108"	108"	NA	108"	108"	108"	108"
				For Shade Widths to 96"	102"	102"	NA	102"	102"	102"	102"
				For Shade Widths to 102"	84"	84"	NA	84"	84"	84"	84"
Sheerweave 7200R	118"	NO	NO	Non-Railroaded							
				Maximum Width	102"	102"	102"	102"	102"	102"	102"
					Maximum Height						
				For Shade Widths to 66"	144"	144"	144"	114"	144"	144"	144"
				For Shade Widths to 72"	138"	138"	138"	114"	138"	138"	138"
				For Shade Widths to 78"	126"	126"	126"	114"	126"	126"	126"
				For Shade Widths to 84"	120"	120"	120"	114"	120"	120"	120"
				For Shade Widths to 90"	108"	108"	108"	108"	108"	108"	108"
				For Shade Widths to 96"	102"	102"	102"	102"	102"	102"	102"
				For Shade Widths to 102"	84"	84"	84"	84"	84"	84"	84"
Sheerweave 7250R	118"	NO	NO	Non-Railroaded							
				Maximum Width	96"	96"	96"	96"	96"	96"	96"
					Maximum Height						
				For Shade Widths to 96"	120"	120"	120"	120"	120"	120"	120"
Sheerweave 7400	118"	NO	NO	Non-Railroaded							
				Maximum Width	96"	96"	96"	96"	96"	96"	96"
					Maximum Height						
				For Shade Widths to 54"	138"	132"	132"	84"	132"	114"	138"
				For Shade Widths to 60"	126"	126"	126"	84"	126"	114"	126"
				For Shade Widths to 66"	108"	108"	108"	84"	108"	108"	108"
				For Shade Widths to 72"	102"	102"	102"	84"	102"	102"	102"
				For Shade Widths to 78"	90"	90"	90"	84"	90"	90"	90"
				For Shade Widths to 84"	84"	84"	84"	84"	84"	84"	84"
				For Shade Widths to 90"	78"	78"	78"	78"	78"	78"	78"
				For Shade Widths to 96"	72"	72"	72"	72"	72"	72"	72"
Sheerweave 7450	118"	NO	NO	Non-Railroaded							
				Maximum Width	108"	108"	108"	108"	108"	108"	108"
					Maximum Height						
				For Shade Widths to 96"	144"	144"	144"	132"	144"	144"	144"
				For Shade Widths to 102"	144"	144"	144"	132"	144"	144"	144"
				For Shade Widths to 108"	108"	108"	108"	108"	108"	108"	108"

PRODUCT SIZE SPECIFICATIONS – REMOTELIFT™ ROLLUP 28 WIREFREE

Minimum and Maximum Standards
Please Note: Shade sizes that are wider than the fabric roll width indicated will be made with the fabric turned width for length (railroaded). The maximum width for non-railroaded shades is the roll width unless otherwise noted.

Minimum:	Width	Height
R28WF	17"	12"

Fabrics turned width for length will have a visible seam when fabricated longer than their maximum roll width less 10". Fabrics turned width for length may have an edge curl. This is not considered a defect in the product.

Material Name	Roll Width	Railroad Option	Splice /Seam		RemoteLift Shade without Top Treatment	RemoteLift with Deluxe Valance	RemoteLift with Fabric Valance	RemoteLift with Medium Cassette	RemoteLift with Large Cassette	RemoteLift with 3" Fascia	RemoteLift with 4" Fascia and Pocket Headrail
Sheerweave 7500	118"	NO	NO	Non-Railroaded							
				Maximum Width	96"	96"	NA	96"	96"	96"	96"
					Maximum Height						
				For Shade Widths to 66"	120"	120"	NA	120"	120"	120"	120"
				For Shade Widths to 72"	120"	120"	NA	120"	120"	120"	120"
				For Shade Widths to 78"	120"	120"	NA	120"	120"	120"	120"
				For Shade Widths to 84"	120"	120"	NA	120"	120"	120"	120"
				For Shade Widths to 90"	108"	108"	NA	108"	108"	108"	108"
				For Shade Widths to 96"	102"	102"	NA	102"	102"	102"	102"
Sheerweave 7500R	118"	NO	NO	Non-Railroaded							
				Maximum Width	102"	N/A	102"	102"	102"	102"	102"
					Maximum Height						
				For Shade Widths to 66"	144"	144"	NA	144"	144"	144"	144"
				For Shade Widths to 72"	138"	138"	NA	138"	138"	138"	138"
				For Shade Widths to 78"	126"	126"	NA	126"	126"	126"	126"
				For Shade Widths to 84"	120"	120"	NA	120"	120"	120"	120"
				For Shade Widths to 90"	108"	108"	NA	108"	108"	108"	108"
				For Shade Widths to 96"	102"	102"	NA	102"	102"	102"	102"
				For Shade Widths to 102"	84"	84"	NA	84"	84"	84"	84"
Sheerweave 7600	118"	NO	NO	Non-Railroaded							
				Maximum Width	102"	102"	102"	102"	102"	102"	102"
					Maximum Height						
				For Shade Widths to 66"	144"	144"	144"	126"	144"	144"	144"
				For Shade Widths to 72"	138"	138"	138"	126"	138"	138"	138"
				For Shade Widths to 78"	126"	126"	126"	126"	126"	126"	126"
				For Shade Widths to 84"	120"	120"	120"	120"	120"	120"	120"
				For Shade Widths to 90"	108"	108"	108"	108"	108"	108"	108"
				For Shade Widths to 96"	102"	102"	102"	102"	102"	102"	102"
				For Shade Widths to 102"	84"	84"	84"	84"	84"	84"	84"
Sheerweave 7650	118"	NO	NO	Non-Railroaded							
				Maximum Width	108"	108"	108"	108"	108"	108"	108"
					Maximum Height						
				For Shade Widths to 96"	144"	144"	144"	144"	144"	144"	144"
				For Shade Widths to 102"	144"	144"	144"	144"	144"	144"	144"
				For Shade Widths to 106"	108	108"	108"	108"	108"	108"	108"
				For Shade Widths to 108"	108"	108"	108"	108"	108"	108"	108"
Sheerweave 7700R	118"	NO	NO	Non-Railroaded							
				Maximum Width	96"	96"	96"	96"	96"	96"	96"
					Maximum Height						
				For Shade Widths to 54"	138"	138"	138"	96"	138"	132"	138"
				For Shade Widths to 60"	126"	126"	126"	96"	126"	126"	126"
				For Shade Widths to 66"	108"	108"	108"	96"	108"	108"	108"
				For Shade Widths to 72"	102"	102"	102"	96"	102"	102"	102"
				For Shade Widths to 78"	90"	90"	90"	90"	90"	90"	90"
				For Shade Widths to 84"	84"	84"	84"	84"	84"	84"	84"
				For Shade Widths to 90"	78"	78"	78"	78"	78"	78"	78"
				For Shade Widths to 96"	72"	72"	72"	72"	72"	72"	72"
Sheerweave 7750R	118"	NO	NO	Non-Railroaded							
				Maximum Width	98"	98"	98"	98"	98"	98"	98"
					Maximum Height						
				For Shade Widths to 66"	120"	120"	120"	120"	120"	120"	120"
				For Shade Widths to 72"	120"	120"	120"	120"	120"	120"	120"
				For Shade Widths to 78"	120"	120"	120"	120"	120"	120"	120"
				For Shade Widths to 84"	120"	120"	120"	120"	120"	120"	120"
				For Shade Widths to 90"	108"	108"	108"	108"	108"	108"	108"
				For Shade Widths to 96"	102"	102"	102"	102"	102"	102"	102"
				For Shade Widths to 98"	84"	84"	84"	84"	84"	84"	84"
Sorrento	108"	NO	NO	Non-Railroaded							
				Maximum Width	108"	96"	96"	108"	108"	108"	108"
					Maximum Height						
				For Shade Widths to 96"	144"	144"	144"	108"	144"	144"	144"
				For Shade Widths to 102"	144"	NA	NA	108"	144"	144"	144"
				For Shade Widths to 108"	108"	NA	NA	108"	108"	108"	108"

PRODUCT SIZE SPECIFICATIONS – REMOTELIFT™ ROLLUP 28 WIREFREE

Minimum and Maximum Standards
Please Note: Shade sizes that are wider than the fabric roll width indicated will be made with the fabric turned width for length (railroaded). The maximum width for non-railroaded shades is the roll width unless otherwise noted.

Minimum:	Width	Height
R28WF	17"	12"

Fabrics turned width for length will have a visible seam when fabricated longer than their maximum roll width less 10". Fabrics turned width for length may have an edge curl. This is not considered a defect in the product.

Material Name	Roll Width	Railroad Option	Splice /Seam		RemoteLift Shade without Top Treatment	RemoteLift with Deluxe Valance	RemoteLift with Fabric Valance	RemoteLift with Medium Cassette	RemoteLift with Large Cassette	RemoteLift with 3" Fascia	RemoteLift with 4" Fascia and Pocket Headrail
Sunscreen (SW) 7000	**118"**	**YES**	**YES**	**Non-Railroaded**							
				Maximum Width	**96"**	**96"**	**96"**	**96"**	**96"**	**96"**	**96"**
					Maximum Height						
				For Shade Widths to 60"	126"	126"	126"	96"	126"	126"	126"
				For Shade Widths to 72"	102"	102"	102"	96"	102"	102"	102"
				For Shade Widths to 78"	90"	90"	90"	90"	90"	90"	90"
				For Shade Widths to 84"	84"	84"	84"	84"	84"	84"	84"
				For Shade Widths to 90"	78"	78"	78"	78"	78"	78"	78"
				For Shade Widths to 96"	72"	72"	72"	72"	72"	72"	72"
				Railroaded							
				Maximum Width	**96"**	**96"**	**96"**	**96"**	**96"**	**96"**	**96"**
					Maximum Height						
				For Shade Widths to 60"	126"	126"	126"	96"	126"	126"	126"
				For Shade Widths to 72"	102"	102"	102"	96"	102"	102"	102"
				For Shade Widths to 78"	90"	90"	90"	90"	90"	90"	90"
				For Shade Widths to 84"	84"	84"	84"	84"	84"	84"	84"
				For Shade Widths to 90"	78"	78"	78"	78"	78"	78"	78"
				For Shade Widths to 96"	72"	72"	72"	72"	72"	72"	72"
Tundra	**94"**	**NO**	**NO**	**Non-Railroaded**							
				Maximum Width	**94"**	**84"**	**84"**	**94"**	**94"**	**94"**	**94"**
					Maximum Height						
				For Shade Widths to 84"	144"	144"	144"	144"	144"	144"	144"
				For Shade Widths to 90"	144"	N/A	N/A	144"	144"	144"	144"
				For Shade Widths to 94"	144"	N/A	N/A	144"	144"	144"	144"
Tundra Blackout	**94"**	**NO**	**NO**	**Non-Railroaded**							
				Maximum Width	**94"**	**84"**	**84"**	**94"**	**94"**	**94"**	**94"**
					Maximum Height						
				For Shade Widths to 66"	120"	120"	120"	120"	120"	120"	120"
				For Shade Widths to 72"	120"	120"	120"	120"	120"	120"	120"
				For Shade Widths to 78"	120"	120"	120"	120"	120"	120"	120"
				For Shade Widths to 84"	120"	120"	120"	120"	120"	120"	120"
				For Shade Widths to 90"	108"	N/A	N/A	108"	108"	108"	108"
				For Shade Widths to 94"	102"	N/A	N/A	102"	102"	102"	102"
Uptown *(R79_02)*	**78"**	**YES**	**NO**	**Non-Railroaded**							
				Maximum Width	**78"**	**66"**	**66"**	**78"**	**78"**	**78"**	**78"**
					Maximum Height						
				For Shade Widths to 66"	144"	144"	144"	144"	144"	144"	144"
				For Shade Widths to 78"	144"	NA	NA	144"	144"	144"	144"
				Railroaded							
				Maximum Width	**114"**	**114"**	**114"**	**114"**	**114"**	**114"**	**114"**
					Maximum Height						
				For Shade Widths to 114"	66"	66"	66"	66"	66"	66"	66"
Uptown Room Darkening *(R79_01)*	**78"**	**YES**	**NO**	**Non-Railroaded**							
				Maximum Width	**78"**	**66"**	**66"**	**78"**	**78"**	**78"**	**78"**
					Maximum Height						
				For Shade Widths to 66"	144"	144"	144"	144"	144"	144"	144"
				For Shade Widths to 72"	138"	NA	NA	138"	138"	138"	138"
				For Shade Widths to 78"	126"	NA	NA	126"	126"	126"	126"
				Railroaded							
				Maximum Width	**108"**	**108"**	**108"**	**108"**	**108"**	**108"**	**108"**
					Maximum Height						
				For Shade Widths to 108"	66"	66"	66"	66"	66"	66"	66"

PRODUCT SIZE SPECIFICATIONS – REMOTELIFT™ ROLLUP 28 WIREFREE

Minimum and Maximum Standards
Please Note: Shade sizes that are wider than the fabric roll width indicated will be made with the fabric turned width for length (railroaded). The maximum width for non-railroaded shades is the roll width unless otherwise noted.

Minimum:	Width	Height
R28WF	17"	12"

Fabrics turned width for length will have a visible seam when fabricated longer than their maximum roll width less 10". Fabrics turned width for length may have an edge curl. This is not considered a defect in the product.

Material Name	Roll Width	Railroad Option	Splice /Seam		RemoteLift Shade without Top Treatment	RemoteLift with Deluxe Valance	RemoteLift with Fabric Valance	RemoteLift with Medium Cassette	RemoteLift with Large Cassette	RemoteLift with 3" Fascia	RemoteLift with 4" Fascia and Pocket Headrail
World Textures 1	78"	YES	YES	Non-Railroaded							
				Maximum Width	78"	66"	66"	78"	78"	78"	78"
					Maximum Height						
				For Shade Widths to 66"	144"	144"	144"	126"	144"	144"	144"
				For Shade Widths to 72"	138"	NA	NA	126"	138"	138"	138"
				For Shade Widths to 78"	126"	NA	NA	126"	126"	126"	126"
				Railroaded							
				Maximum Width	102"	102"	102"	102"	102"	102"	102"
					Maximum Height						
				For Shade Widths to 66"	144"	144"	144"	126"	144"	144"	144"
				For Shade Widths to 72"	138"	138"	138"	126"	138"	138"	138"
				For Shade Widths to 78"	126"	126"	126"	126"	126"	126"	126"
				For Shade Widths to 84"	120"	120"	120"	108"	120"	120"	120"
				For Shade Widths to 90"	108"	108"	108"	108"	108"	108"	108"
				For Shade Widths to 96"	102"	102"	102"	102"	102"	102"	102"
				For Shade Widths to 102"	84"	84"	84"	84"	84"	84"	84"
World Textures 1 Blackout	78"	YES	YES	Non-Railroaded							
				Maximum Width	78"	66"	66"	78"	78"	78"	78"
					Maximum Height						
				For Shade Widths to 66"	144"	138"	138"	108"	144"	144"	144"
				For Shade Widths to 72"	138"	NA	NA	108"	138"	138"	138"
				For Shade Widths to 78"	126"	NA	NA	108"	126"	126"	126"
				Railroaded							
				Maximum Width	102"	102"	102"	102"	102"	102"	102"
					Maximum Height						
				For Shade Widths to 66"	144"	144"	144"	108"	144"	144"	144"
				For Shade Widths to 72"	138"	138"	138"	108"	138"	138"	138"
				For Shade Widths to 78"	126"	126"	126"	108"	126"	126"	126"
				For Shade Widths to 84"	120"	120"	120"	108"	120"	120"	120"
				For Shade Widths to 90"	108"	108"	108"	108"	108"	108"	108"
				For Shade Widths to 96"	102"	102"	102"	102"	102"	102"	102"
				For Shade Widths to 102"	84"	84"	84"	84"	84"	84"	84"
World Textures 2	80"	YES	YES	Non-Railroaded							
				Maximum Width	80"	70"	70"	80"	80"	80"	80"
					Maximum Height						
				For Shade Widths to 66"	144"	138"	138"	84"	138"	120"	144"
				For Shade Widths to 70"	138"	138"	138"	84"	138"	120"	138"
				For Shade Widths to 72"	138"	NA	NA	84"	138"	120"	138"
				For Shade Widths to 80"	120"	NA	NA	84"	120"	120"	120"
				Railroaded							
				Maximum Width	102"	102"	102"	102"	102"	102"	102"
					Maximum Height						
				For Shade Widths to 66"	144"	138"	138"	84"	138"	120"	144"
				For Shade Widths to 72"	138"	138"	138"	84"	138"	120"	138"
				For Shade Widths to 84"	120"	120"	120"	84"	120"	120"	120"
				For Shade Widths to 90"	108"	108"	108"	84"	108"	108"	108"
				For Shade Widths to 96"	102"	102"	102"	84"	102"	102"	102"
				For Shade Widths to 102"	84"	84"	84"	84"	84"	84"	84"
World Textures 2 Blackout	80"	YES	YES	Non-Railroaded							
				Maximum Width	80"	70"	70"	80"	80"	80"	80"
					Maximum Height						
				For Shade Widths to 66"	144"	144"	144"	144"	144"	144"	144"
				For Shade Widths to 70"	138"	138"	138"	138"	138"	138"	138"
				For Shade Widths to 72"	138"	NA	NA	138"	138"	138"	138"
				For Shade Widths to 80"	120"	NA	NA	120"	120"	120"	120"
				Railroaded							
				Maximum Width	102"	102"	102"	102"	102"	102"	102"
					Maximum Height						
				For Shade Widths to 66"	144"	144"	144"	144"	144"	144"	144"
				For Shade Widths to 72"	138"	138"	138"	138"	138"	138"	138"
				For Shade Widths to 84"	120"	120"	120"	120"	120"	120"	120"
				For Shade Widths to 90"	108"	108"	108"	108"	108"	108"	108"
				For Shade Widths to 96"	102"	102"	102"	102"	102"	102"	102"
				For Shade Widths to 102"	84"	84"	84"	84"	84"	84"	84"

Minimum and Maximum Standards

Please Note: Shade sizes that are wider than the fabric roll width indicated will be made with the fabric turned width for length (railroaded). The maximum width for non-railroaded shades is the roll width unless otherwise noted.

Minimum:	Width	Height
ST30WF	29"	12"

Fabrics turned width for length will have a visible seam when fabricated longer than their maximum roll width less 10". Fabrics turned width for length may have an edge curl. This is not considered a defect in the product.

Material Name	Roll Width	Railroad Option	Splice /Seam		Motorized Shade without Top Treament	Motorized Shade Deluxe Valance	Motorized Shade Fabric Valance	Motorized Shade with Medium Cassette	Motorized Shade with Large Cassette	Motorized Shade with 3" Fascia	Motorized Shade with 4" Fascia	Motorized Shade with Pocket Headrail
1% E Screen	122"	YES	YES	Non-Railroaded								
				Maximum Width	102"	102"	102"	102"	102"	102"	102"	102"
					Maximum Height							
				For Shade Widths to 84"	144"	144"	144"	138"	144"	144"	144"	144"
				For Shade Widths to 90"	138"	138"	138"	138"	138"	138"	138"	138"
				For Shade Widths to 96"	108"	108"	108"	108"	108"	108"	108"	108"
				For Shade Widths to 102"	84"	84"	84"	84"	84"	84"	84"	84"
				Railroaded								
				Maximum Width	102"	102"	102"	102"	102"	102"	102"	102"
					Maximum Height							
				For Shade Widths to 84"	144"	144"	144"	138"	144"	144"	144"	144"
				For Shade Widths to 90"	138"	138"	138"	138"	138"	138"	138"	138"
				For Shade Widths to 96"	108"	108"	108"	108"	108"	108"	108"	108"
				For Shade Widths to 102"	84"	84"	84"	84"	84"	84"	84"	84"
1% Sheerweave 2500	126"	YES	YES	Non-Railroaded								
				Maximum Width	96"	96"	96"	96"	96"	96"	96"	96"
					Maximum Height							
				For Shade Widths to 78"	144"	144"	144"	114"	144"	144"	144"	144"
				For Shade Widths to 84"	126"	126"	126"	114"	126"	126"	126"	126"
				For Shade Widths to 90"	96"	96"	96"	96"	96"	96"	96"	96"
				For Shade Widths to 96"	78"	78"	78"	78"	78"	78"	78"	78"
				Railroaded								
				Maximum Width	96"	96"	96"	96"	96"	96"	96"	96"
					Maximum Height							
				For Shade Widths to 78"	144"	144"	144"	114"	144"	144"	144"	144"
				For Shade Widths to 84"	126"	126"	126"	114"	126"	126"	126"	126"
				For Shade Widths to 90"	96"	96"	96"	96"	96"	96"	96"	96"
				For Shade Widths to 96"	78"	78"	78"	78"	78"	78"	78"	78"
1% Sheerweave 2701	126"	YES	YES	Non-Railroaded								
				Maximum Width	102"	102"	102"	102"	102"	102"	102"	102"
					Maximum Height							
				For Shade Widths to 72"	144"	144"	144"	138"	144"	144"	144"	144"
				For Shade Widths to 84"	126"	126"	126"	126"	126"	126"	126"	126"
				For Shade Widths to 90"	96"	96"	96"	96"	96"	96"	96"	96"
				For Shade Widths to 96"	78"	78"	78"	78"	78"	78"	78"	78"
				For Shade Widths over 96"	60"	60"	60"	60"	60"	60"	60"	60"
				Railroaded								
				Maximum Width	102"	102"	102"	102"	102"	102"	102"	102"
					Maximum Height							
				For Shade Widths to 72"	144"	144"	144"	138"	144"	144"	144"	144"
				For Shade Widths to 84"	126"	126"	126"	126"	126"	126"	126"	126"
				For Shade Widths to 90"	96"	96"	96"	96"	96"	96"	96"	96"
				For Shade Widths to 96"	78"	78"	78"	78"	78"	78"	78"	78"
				For Shade Widths over 96"	60"	60"	60"	60"	60"	60"	60"	60"
1% Sheerweave 4901	98"	NO	NO	Non-Railroaded								
				Maximum Width	96"	88"	88"	96"	96"	96"	96"	96"
					Maximum Height							
				For Shade Widths to 54"	144"	144"	144"	96"	144"	126"	144"	144"
				For Shade Widths to 60"	144"	144"	144"	96"	144"	126"	144"	144"
				For Shade Widths to 66"	144"	144"	144"	96"	144"	126"	144"	144"
				For Shade Widths to 72"	144"	144"	144"	96"	144"	126"	144"	144"
				For Shade Widths to 78"	144"	144"	144"	96"	144"	126"	144"	144"
				For Shade Widths to 84"	126"	126"	126"	96"	126"	126"	126"	126"
				For Shade Widths to 88"	96"	96"	96"	96"	96"	96"	96"	96"
				For Shade Widths to 90"	96"	N/A	N/A	96"	96"	96"	96"	96"
				For Shade Widths to 96"	78"	N/A	N/A	78"	78"	78"	78"	78"
1% Sheerweave 5000	98"	NO	NO	Non-Railroaded								
				Maximum Width	96"	86"	86"	96"	96"	96"	96"	96"
					Maximum Height							
				For Shade Widths to 78"	144"	84"	84"	55"	84"	72"	144"	126"
				For Shade Widths to 84"	126"	84"	84"	55"	84"	72"	126"	126"
				For Shade Widths to 86"	96"	84"	84"	55"	84"	72"	96"	96"
				For Shade Widths to 90"	96"	NA	NA	55"	84"	72"	96"	96"
				For Shade Widths to 96"	78"	NA	NA	55"	78"	72"	78"	78"

Minimum and Maximum Standards

Please Note: Shade sizes that are wider than the fabric roll width indicated will be made with the fabric turned width for length (railroaded). The maximum width for non-railroaded shades is the roll width unless otherwise noted.

Minimum:	Width	Height
ST30WF	29"	12"

Fabrics turned width for length will have a visible seam when fabricated longer than their maximum roll width less 10". Fabrics turned width for length may have an edge curl. This is not considered a defect in the product.

Material Name	Roll Width	Railroad Option	Splice /Seam		Motorized Shade without Top Treament	Motorized Shade Deluxe Valance	Motorized Shade Fabric Valance	Motorized Shade with Medium Cassette	Motorized Shade with Large Cassette	Motorized Shade with 3" Fascia	Motorized Shade with 4" Fascia	Motorized Shade with Pocket Headrail
1% Toka	118"	YES	YES	Non-Railroaded								
				Maximum Width	102"	102"	102"	102"	102"	102"	102"	102"
					Maximum Height							
				For Shade Widths to 72"	144"	144"	144"	96"	144"	132"	144"	144"
				For Shade Widths to 84"	126"	126"	126"	96"	126"	126"	126"	126"
				For Shade Widths to 90"	96"	96"	96"	96"	96"	96"	96"	96"
				For Shade Widths to 96"	78"	78"	78"	78"	78"	78"	78"	78"
				For Shade Widths over 96"	60"	60"	60"	60"	60"	60"	60"	60"
				Railroaded								
				Maximum Width	102"	102"	102"	102"	102"	102"	102"	102"
					Maximum Height							
				For Shade Widths to 72"	144"	144"	144"	96"	144"	132"	144"	144"
				For Shade Widths to 84"	126"	126"	126"	96"	126"	126"	126"	126"
				For Shade Widths to 90"	96"	96"	96"	96"	96"	96"	96"	96"
				For Shade Widths to 96"	78"	78"	78"	78"	78"	78"	78"	78"
				For Shade Widths over 96"	60"	60"	60"	60"	60"	60"	60"	60"
3% E Screen	122"	YES	YES	Non-Railroaded								
				Maximum Width	102"	102"	102"	102"	102"	102"	102"	102"
					Maximum Height							
				For Shade Widths to 84"	144"	144"	144"	144"	144"	144"	144"	144"
				For Shade Widths to 90"	138"	138"	138"	138"	138"	138"	138"	138"
				For Shade Widths to 96"	108"	108"	108"	108"	108"	108"	108"	108"
				For Shade Widths to 102"	84"	84"	84"	84"	84"	84"	84"	84"
				Railroaded								
				Maximum Width	102"	102"	102"	102"	102"	102"	102"	102"
					Maximum Height							
				For Shade Widths to 84"	144"	144"	144"	144"	144"	144"	144"	144"
				For Shade Widths to 90"	138"	138"	138"	138"	138"	138"	138"	138"
				For Shade Widths to 96"	108"	108"	108"	108"	108"	108"	108"	108"
				For Shade Widths to 102"	84"	84"	84"	84"	84"	84"	84"	84"
3% M Screen	122"	YES	YES	Non-Railroaded								
				Maximum Width	108"	108"	108"	108"	108"	108"	108"	108"
					Maximum Height							
				For Shade Widths to 84"	144"	144"	144"	144"	144"	144"	144"	144"
				For Shade Widths to 90"	138"	138"	138"	138"	138"	138"	138"	138"
				For Shade Widths to 96"	108"	108"	108"	108"	108"	108"	108"	108"
				For Shade Widths over 96"	66"	66"	66"	66"	66"	66"	66"	66"
				Railroaded								
				Maximum Width	108"	108"	108"	108"	108"	108"	108"	108"
					Maximum Height							
				For Shade Widths to 84"	144"	144"	144"	144"	144"	144"	144"	144"
				For Shade Widths to 90"	138"	138"	138"	138"	138"	138"	138"	138"
				For Shade Widths to 96"	108"	108"	108"	108"	108"	108"	108"	108"
				For Shade Widths over 96"	66"	66"	66"	66"	66"	66"	66"	66"
3% Sheerweave 2410	126"	YES	YES	Non-Railroaded								
				Maximum Width	102"	102"	102"	102"	102"	102"	102"	102"
					Maximum Height							
				For Shade Widths to 72"	144"	144"	144"	144"	144"	144"	144"	144"
				For Shade Widths to 84"	126"	126"	126"	126"	126"	126"	126"	126"
				For Shade Widths to 90"	96"	96"	96"	96"	96"	96"	96"	96"
				For Shade Widths to 96"	78"	78"	78"	78"	78"	78"	78"	78"
				For Shade Widths over 96"	60"	60"	60"	60"	60"	60"	60"	60"
				Railroaded								
				Maximum Width	102"	102"	102"	102"	102"	102"	102"	102"
					Maximum Height							
				For Shade Widths to 72"	144"	144"	144"	144"	144"	144"	144"	144"
				For Shade Widths to 84"	126"	126"	126"	126"	126"	126"	126"	126"
				For Shade Widths to 90"	96"	96"	96"	96"	96"	96"	96"	96"
				For Shade Widths to 96"	78"	78"	78"	78"	78"	78"	78"	78"
				For Shade Widths over 96"	60"	60"	60"	60"	60"	60"	60"	60"

Minimum and Maximum Standards

Please Note: Shade sizes that are wider than the fabric roll width indicated will be made with the fabric turned width for length (railroaded). The maximum width for non-railroaded shades is the roll width unless otherwise noted.

Minimum:	Width	Height
ST30WF	29"	12"

Fabrics turned width for length will have a visible seam when fabricated longer than their maximum roll width less 10". Fabrics turned width for length may have an edge curl. This is not considered a defect in the product.

Material Name	Roll Width	Railroad Option	Splice /Seam		Motorized Shade without Top Treament	Motorized Shade Deluxe Valance	Motorized Shade Fabric Valance	Motorized Shade with Medium Cassette	Motorized Shade with Large Cassette	Motorized Shade with 3" Fascia	Motorized Shade with 4" Fascia	Motorized Shade with Pocket Headrail
3% Sheerweave 2703	126"	YES	YES	Non-Railroaded								
				Maximum Width	96"	96"	96"	96"	96"	96"	96"	96"
					Maximum Height							
				For Shade Widths to 54"	144"	144"	144"	96"	144"	126"	144"	144"
				For Shade Widths to 60"	144"	144"	144"	96"	144"	126"	144"	144"
				For Shade Widths to 66"	144"	144"	144"	96"	144"	126"	144"	144"
				For Shade Widths to 72"	144"	144"	144"	96"	144"	126"	144"	144"
				For Shade Widths to 78"	144"	144"	144"	96"	144"	126"	144"	144"
				For Shade Widths to 84"	126"	126"	126"	96"	126"	126"	126"	126"
				For Shade Widths to 90"	96"	96"	96"	96"	96"	96"	96"	96"
				For Shade Widths to 96"	78"	78"	78"	78"	78"	78"	78"	78"
				Railroaded								
				Maximum Width	96"	96"	96"	96"	96"	96"	96"	96"
					Maximum Height							
				For Shade Widths to 54"	144"	144"	144"	96"	144"	126"	144"	144"
				For Shade Widths to 60"	144"	144"	144"	96"	144"	126"	144"	144"
				For Shade Widths to 66"	144"	144"	144"	96"	144"	126"	144"	144"
				For Shade Widths to 72"	144"	144"	144"	96"	144"	126"	144"	144"
				For Shade Widths to 78"	144"	144"	144"	96"	144"	126"	144"	144"
				For Shade Widths to 84"	126"	126"	126"	96"	126"	126"	126"	126"
				For Shade Widths to 90"	96"	96"	96"	96"	96"	96"	96"	96"
				For Shade Widths to 96"	78"	78"	78"	78"	78"	78"	78"	78"
3% Sheerweave 4400	126"	YES	YES	Non-Railroaded								
				Maximum Width	102"	102"	102"	102"	102"	102"	102"	102"
					Maximum Height							
				For Shade Widths to 78"	144"	120"	120"	78"	120"	108"	144"	144"
				For Shade Widths to 84"	126"	120"	120"	78"	120"	108"	126"	126"
				For Shade Widths to 90"	96"	96"	96"	78"	96"	96"	96"	96"
				For Shade Widths to 96"	78"	78"	78"	78"	78"	78"	78"	78"
				For Shade Widths over 96"	60"	60"	60"	60"	60"	60"	60"	60"
				Railroaded								
				Maximum Width	102"	102"	102"	102"	102"	102"	102"	102"
					Maximum Height							
				For Shade Widths to 78"	144"	120"	120"	78"	120"	108"	144"	144"
				For Shade Widths to 84"	126"	120"	120"	78"	120"	108"	126"	126"
				For Shade Widths to 90"	96"	96"	96"	78"	96"	96"	96"	96"
				For Shade Widths to 96"	78"	78"	78"	78"	78"	78"	78"	78"
				For Shade Widths over 96"	60"	60"	60"	60"	60"	60"	60"	60"
3% Sheerweave 4600	126"	YES	YES	Non-Railroaded								
				Maximum Width	96"	96"	96"	96"	96"	96"	96"	96"
					Maximum Height							
				For Shade Widths to 54"	120"	120"	120"	84"	120"	114"	120"	120"
				For Shade Widths to 60"	120"	120"	120"	84"	120"	114"	120"	120"
				For Shade Widths to 66"	120"	120"	120"	84"	120"	114"	120"	120"
				For Shade Widths to 72"	120"	120"	120"	84"	120"	114"	120"	120"
				For Shade Widths to 78"	120"	120"	120"	84"	120"	114"	120"	120"
				For Shade Widths to 84"	120"	120"	120"	84"	120"	114"	120"	120"
				For Shade Widths to 90"	96"	96"	96"	84"	96"	96"	96"	96"
				For Shade Widths to 96"	78"	78"	78"	78"	78"	78"	78"	78"
				Railroaded								
				Maximum Width	96"	96"	96"	96"	96"	96"	96"	96"
					Maximum Height							
				For Shade Widths to 54"	120"	120"	120"	84"	120"	114"	120"	120"
				For Shade Widths to 60"	120"	120"	120"	84"	120"	114"	120"	120"
				For Shade Widths to 66"	120"	120"	120"	84"	120"	114"	120"	120"
				For Shade Widths to 72"	120"	120"	120"	84"	120"	114"	120"	120"
				For Shade Widths to 78"	120"	120"	120"	84"	120"	114"	120"	120"
				For Shade Widths to 84"	120"	120"	120"	84"	120"	114"	120"	120"
				For Shade Widths to 90"	96"	96"	96"	84"	96"	96"	96"	96"
				For Shade Widths to 96"	78"	78"	78"	78"	78"	78"	78"	78"
3% Sheerweave 4903	98"	NO	NO	Non-Railroaded								
				Maximum Width	96"	88"	88"	96"	96"	96"	96"	96"
					Maximum Height							
				For Shade Widths to 54"	144"	144"	144"	90"	144"	126"	144"	144"
				For Shade Widths to 60"	144"	144"	144"	90"	144"	126"	144"	144"
				For Shade Widths to 66"	144"	144"	144"	90"	144"	126"	144"	144"
				For Shade Widths to 72"	144"	144"	144"	90"	144"	126"	144"	144"
				For Shade Widths to 78"	144"	144"	144"	90"	144"	126"	144"	144"
				For Shade Widths to 84"	126"	126"	126"	90"	126"	126"	126"	126"
				For Shade Widths to 88"	96"	96"	96"	90"	96"	96"	96"	96"
				For Shade Widths to 90"	96"	N/A	N/A	90"	96"	96"	96"	96"
				For Shade Widths to 96"	78"	N/A	N/A	78"	78"	78"	78"	78"

Minimum and Maximum Standards

Please Note: Shade sizes that are wider than the fabric roll width indicated will be made with the fabric turned width for length (railroaded). The maximum width for non-railroaded shades is the roll width unless otherwise noted.

Minimum:	Width	Height
ST30WF	29"	12"

Fabrics turned width for length will have a visible seam when fabricated longer than their maximum roll width less 10". Fabrics turned width for length may have an edge curl. This is not considered a defect in the product.

Material Name	Roll Width	Railroad Option	Splice /Seam		Motorized Shade without Top Treament	Motorized Shade Deluxe Valance	Motorized Shade Fabric Valance	Motorized Shade with Medium Cassette	Motorized Shade with Large Cassette	Motorized Shade with 3" Fascia	Motorized Shade with 4" Fascia	Motorized Shade with Pocket Headrail
3% Sheerweave 5000	98"	NO	NO	Non-Railroaded								
(R07_02, 04, 05, 07, 10)				**Maximum Width**	**96"**	**86"**	**86"**	**96"**	**96"**	**96"**	**96"**	**96"**
					Maximum Height							
				For Shade Widths to 78"	144"	72"	72"	42"	72"	60"	144"	108"
				For Shade Widths to 84"	126"	72"	72"	42"	72"	60"	126"	108"
				For Shade Widths to 86"	96"	72"	72"	42"	72"	60"	96"	96"
				For Shade Widths to 90"	96"	NA	NA	42"	72"	60"	96"	96"
				For Shade Widths over 90"	78"	NA	NA	42"	72"	60"	78"	78"
3% Sheerweave 5000	98"	NO	NO	Non-Railroaded								
(R07_R11, R89, R90, R93, U10, U11)				**Maximum Width**	**96"**	**88"**	**88"**	**96"**	**96"**	**96"**	**96"**	**96"**
					Maximum Height							
				For Shade Widths to 54"	144"	78"	78"	48"	78"	72"	144"	114"
				For Shade Widths to 60"	144"	78"	78"	48"	78"	72"	144"	114"
				For Shade Widths to 66"	144"	78"	78"	48"	78"	72"	144"	114"
				For Shade Widths to 72"	144"	78"	78"	48"	78"	72"	144"	114"
				For Shade Widths to 78"	144"	78"	78"	48"	78"	72"	144"	114"
				For Shade Widths to 84"	126"	78"	78"	48"	78"	72"	126"	114"
				For Shade Widths to 88"	96"	78"	78"	48"	78"	72"	96"	96"
				For Shade Widths to 90"	96"	NA	NA	48"	78"	72"	96"	96"
				For Shade Widths over 90"	78"	NA	NA	48"	78"	72"	78"	78"
3% T Screen	98"	YES	NO	Non-Railroaded								
				Maximum Width	**98"**	**88"**	**88"**	**98"**	**98"**	**98"**	**98"**	**98"**
					Maximum Height							
				For Shade Widths to 84"	144"	144"	144"	108"	144"	144"	144"	144"
				For Shade Widths to 88"	138"	138"	138"	108"	138"	138"	138"	138"
				For Shade Widths to 90"	138"	NA	NA	108"	138"	138"	138"	138"
				For Shade Widths to 96"	108"	NA	NA	108"	108"	108"	108"	108"
				For Shade Widths over 96"	84"	NA	NA	84"	84"	84"	84"	84"
				Railroaded								
				Maximum Width	**108"**	**108"**	**108"**	**108"**	**108"**	**108"**	**108"**	**108"**
					Maximum Height							
				For Shade Widths to 96"	86"	86"	86"	86"	86"	86"	86"	86"
				For Shade Widths over 96"	66"	66"	66"	66"	66"	66"	66"	66"
4% S Screen	122"	NO	NO	Non-Railroaded								
				Maximum Width	**102"**	**102"**	**102"**	**102"**	**102"**	**102"**	**102"**	**102"**
					Maximum Height							
				For Shade Widths to 72"	144"	120"	120"	72"	120"	102"	144"	144"
				For Shade Widths to 84"	126"	120"	120"	72"	120"	102"	126"	126"
				For Shade Widths to 90"	96"	96"	96"	72"	96"	96"	96"	96"
				For Shade Widths to 96"	78"	78"	78"	72"	78"	78"	78"	78"
				For Shade Widths over 96"	60"	60"	60"	60"	60"	60"	60"	60"
4% Silver Screen	94"	YES	YES	Non-Railroaded								
				Maximum Width	**94"**	**84"**	**84"**	**94"**	**94"**	**94"**	**94"**	**94"**
					Maximum Height							
				For Shade Widths to 84"	144"	144"	144"	144"	144"	144"	144"	144"
				For Shade Widths to 90"	138"	NA	NA	138"	138"	138"	138"	138"
				For Shade Widths to 94"	108"	NA	NA	108"	108"	108"	108"	108"
				Railroaded								
				Maximum Width	**102"**	**102"**	**102"**	**102"**	**102"**	**102"**	**102"**	**102"**
					Maximum Height							
				For Shade Widths to 84"	144"	144"	144"	144"	144"	144"	144"	144"
				For Shade Widths to 90"	138"	138"	138"	138"	138"	138"	138"	138"
				For Shade Widths to 96"	108"	108"	108"	108"	108"	108"	108"	108"
				For Shade Widths to 102"	84"	84"	84"	84"	84"	84"	84"	84"
5% E Screen	122"	YES	YES	Non-Railroaded								
				Maximum Width	**102"**	**102"**	**102"**	**102"**	**102"**	**102"**	**102"**	**102"**
					Maximum Height							
				For Shade Widths to 84"	144"	144"	144"	144"	144"	144"	144"	144"
				For Shade Widths to 90"	138"	138"	138"	138"	138"	138"	138"	138"
				For Shade Widths to 96"	108"	108"	108"	108"	108"	108"	108"	108"
				For Shade Widths to 102"	84"	84"	84"	84"	84"	84"	84"	84"
				Railroaded								
				Maximum Width	**102"**	**102"**	**102"**	**102"**	**102"**	**102"**	**102"**	**102"**
					Maximum Height							
				For Shade Widths to 84"	144"	144"	144"	144"	144"	144"	144"	144"
				For Shade Widths to 90"	138"	138"	138"	138"	138"	138"	138"	138"
				For Shade Widths to 96"	108"	108"	108"	108"	108"	108"	108"	108"
				For Shade Widths to 102"	84"	84"	84"	84"	84"	84"	84"	84"

Minimum and Maximum Standards

Please Note: Shade sizes that are wider than the fabric roll width indicated will be made with the fabric turned width for length (railroaded). The maximum width for non-railroaded shades is the roll width unless otherwise noted.

Minimum:	Width	Height
ST30WF	29"	12"

Fabrics turned width for length will have a visible seam when fabricated longer than their maximum roll width less 10". Fabrics turned width for length may have an edge curl. This is not considered a defect in the product.

Material Name	Roll Width	Railroad Option	Splice /Seam		Motorized Shade without Top Treament	Motorized Shade Deluxe Valance	Motorized Shade Fabric Valance	Motorized Shade with Medium Cassette	Motorized Shade with Large Cassette	Motorized Shade with 3" Fascia	Motorized Shade with 4" Fascia	Motorized Shade with Pocket Headrail
5% M Screen Deco	98"	YES	YES	Non-Railroaded								
				Maximum Width	96"	86"	86"	96"	96"	96"	96"	96"
					Maximum Height							
				For Shade Widths to 84"	144"	144"	144"	126"	144"	144"	144"	144"
				For Shade Widths to 86"	138"	138"	138"	126"	138"	138"	138"	138"
				For Shade Widths to 90"	138"	NA	NA	126"	138"	138"	138"	138"
				For Shade Widths to 96"	108"	NA	NA	108"	108"	108"	108"	108"
				Railroaded								
				Maximum Width	102"	102"	102"	102"	102"	102"	102"	102"
					Maximum Height							
				For Shade Widths to 84"	144"	144"	144"	126"	144"	144"	144"	144"
				For Shade Widths to 90"	138"	138"	138"	126"	138"	138"	138"	138"
				For Shade Widths to 96"	108"	108"	108"	108"	108"	108"	108"	108"
				For Shade Widths to 102"	84"	84"	84"	84"	84"	84"	84"	84"
				For Shade Widths over 102"	NA	NA	NA	NA	NA	NA	NA	NA
5% Sheerweave 2000	126"	YES	YES	Non-Railroaded								
				Maximum Width	96"	96"	96"	96"	96"	96"	96"	96"
					Maximum Height							
				For Shade Widths to 54"	144"	144"	144"	132"	144"	144"	144"	144"
				For Shade Widths to 60"	144"	144"	144"	126"	144"	144"	144"	144"
				For Shade Widths to 66"	144"	144"	144"	126"	144"	144"	144"	144"
				For Shade Widths to 72"	144"	144"	144"	126"	144"	144"	144"	144"
				For Shade Widths to 78"	144"	144"	144"	126"	144"	144"	144"	144"
				For Shade Widths to 84"	126"	126"	126"	126"	126"	126"	126"	126"
				For Shade Widths to 90"	96"	96"	96"	96"	96"	96"	96"	96"
				For Shade Widths to 96"	78"	78"	78"	78"	78"	78"	78"	78"
				Railroaded								
				Maximum Width	96"	96"	96"	96"	96"	96"	96"	96"
					Maximum Height							
				For Shade Widths to 54"	120"	120"	120"	120"	120"	120"	120"	120"
				For Shade Widths to 60"	120"	120"	120"	120"	120"	120"	120"	120"
				For Shade Widths to 66"	120"	120"	120"	120"	120"	120"	120"	120"
				For Shade Widths to 72"	120"	120"	120"	120"	120"	120"	120"	120"
				For Shade Widths to 78"	120"	120"	120"	120"	120"	120"	120"	120"
				For Shade Widths to 84"	120"	120"	120"	120"	120"	120"	120"	120"
				For Shade Widths to 90"	96"	96"	96"	96"	96"	96"	96"	96"
				For Shade Widths to 96"	78"	78"	78"	78"	78"	78"	78"	78"
5% Sheerweave 2390	126"	YES	YES	Non-Railroaded								
				Maximum Width	102"	102"	102"	102"	102"	102"	102"	102"
					Maximum Height							
				For Shade Widths to 84"	144"	144"	144"	144"	144"	144"	144"	144"
				For Shade Widths to 90"	138"	138"	138"	138"	138"	138"	138"	138"
				For Shade Widths to 96"	108"	108"	108"	108"	108"	108"	108"	108"
				For Shade Widths to 102"	84"	84"	84"	84"	84"	84"	84"	84"
				Railroaded								
				Maximum Width	102"	102"	102"	102"	102"	102"	102"	102"
					Maximum Height							
				For Shade Widths to 84"	144"	144"	144"	144"	144"	144"	144"	144"
				For Shade Widths to 90"	138"	138"	138"	138"	138"	138"	138"	138"
				For Shade Widths to 96"	108"	108"	108"	108"	108"	108"	108"	108"
				For Shade Widths to 102"	84"	84"	84"	84"	84"	84"	84"	84"
5% Sheerweave 2705	126"	NO	NO	Non-Railroaded								
				Maximum Width	98"	98"	N/A	98"	98"	98"	98"	98"
					Maximum Height							
				For Shade Widths to 66"	120"	120"	N/A	102"	120"	120"	120"	120"
				For Shade Widths to 72"	120"	120"	N/A	102"	120"	120"	120"	120"
				For Shade Widths to 78"	120"	120"	N/A	102"	120"	120"	120"	120"
				For Shade Widths to 84"	120"	120"	N/A	102"	120"	120"	120"	120"
				For Shade Widths to 90"	120"	120"	N/A	102"	120"	120"	120"	120"
				For Shade Widths to 96"	108"	108"	N/A	102"	108"	108"	108"	108"
				For Shade Widths over 96"	84"	84"	N/A	84"	84"	84"	84"	84"

Minimum and Maximum Standards

Please Note: Shade sizes that are wider than the fabric roll width indicated will be made with the fabric turned width for length (railroaded). The maximum width for non-railroaded shades is the roll width unless otherwise noted.

Minimum:	Width	Height
ST30WF	29"	12"

Fabrics turned width for length will have a visible seam when fabricated longer than their maximum roll width less 10". Fabrics turned width for length may have an edge curl. This is not considered a defect in the product.

Material Name	Roll Width	Railroad Option	Splice /Seam		Motorized Shade without Top Treament	Motorized Shade Deluxe Valance	Motorized Shade Fabric Valance	Motorized Shade with Medium Cassette	Motorized Shade with Large Cassette	Motorized Shade with 3" Fascia	Motorized Shade with 4" Fascia	Motorized Shade with Pocket Headrail
5% Sheerweave 4000	126"	YES	YES	Non-Railroaded								
				Maximum Width	102"	102"	102"	102"	102"	102"	102"	102"
					Maximum Height							
				For Shade Widths to 78"	144"	138"	138"	90"	138"	120"	144"	144"
				For Shade Widths to 84"	126"	126"	126"	90"	126"	120"	126"	126"
				For Shade Widths to 90"	96"	96"	96"	90"	96"	96"	96"	96"
				For Shade Widths to 96"	78"	78"	78"	78"	78"	78"	78"	78"
				For Shade Widths over 96"	60"	60"	60"	60"	60"	60"	60"	60"
				Railroaded								
				Maximum Width	102"	102"	102"	102"	102"	102"	102"	102"
					Maximum Height							
				For Shade Widths to 78"	144"	138"	138"	90"	138"	120"	144"	144"
				For Shade Widths to 84"	126"	126"	126"	90"	126"	120"	126"	126"
				For Shade Widths to 90"	96"	96"	96"	90"	96"	96"	96"	96"
				For Shade Widths to 96"	78"	78"	78"	78"	78"	78"	78"	78"
				For Shade Widths over 96"	60"	60"	60"	60"	60"	60"	60"	60"
5% Sheerweave 4500	126"	YES	YES	Non-Railroaded								
				Maximum Width	96"	96"	96"	96"	96"	96"	96"	96"
					Maximum Height							
				For Shade Widths to 54"	144"	144"	144"	108"	144"	144"	144"	144"
				For Shade Widths to 60"	144"	144"	144"	108"	144"	144"	144"	144"
				For Shade Widths to 66"	144"	144"	144"	108"	144"	144"	144"	144"
				For Shade Widths to 72"	144"	144"	144"	108"	144"	144"	144"	144"
				For Shade Widths to 78"	144"	144"	144"	108"	144"	144"	144"	144"
				For Shade Widths to 84"	126"	126"	126"	108"	126"	126"	126"	126"
				For Shade Widths to 90"	96"	96"	96"	96"	96"	96"	96"	96"
				For Shade Widths to 96"	78"	78"	78"	72"	78"	78"	78"	78"
				Railroaded								
				Maximum Width	96"	96"	96"	96"	96"	96"	96"	96"
					Maximum Height							
				For Shade Widths to 54"	144"	144"	144"	108"	144"	144"	144"	144"
				For Shade Widths to 60"	144"	144"	144"	108"	144"	144"	144"	144"
				For Shade Widths to 66"	144"	144"	144"	108"	144"	144"	144"	144"
				For Shade Widths to 72"	144"	144"	144"	108"	144"	144"	144"	144"
				For Shade Widths to 78"	144"	144"	144"	108"	144"	144"	144"	144"
				For Shade Widths to 84"	126"	126"	126"	108"	126"	126"	126"	126"
				For Shade Widths to 90"	96"	96"	96"	96"	96"	96"	96"	96"
				For Shade Widths to 96"	78"	78"	78"	72"	78"	78"	78"	78"
5% Sheerweave 5000 *(R10_01, 03, 06, 07, 09, 10, 11, 12, 13,14, 15, 16, 17, 18, 19, 20, 21)*	98"	NO	NO	Non-Railroaded								
				Maximum Width	98"	88"	88"	98"	98"	98"	98"	98"
					Maximum Height							
				For Shade Widths to 72"	144"	90"	90"	54"	90"	78"	144"	126"
				For Shade Widths to 84"	126"	90"	90"	54"	90"	78"	126"	126"
				For Shade Widths to 88"	96"	90"	90"	54"	90"	78"	96"	96"
				For Shade Widths to 90"	96"	NA	NA	54"	90"	78"	96"	96"
				For Shade Widths over 90"	60"	NA	NA	54"	60"	60"	60"	60"
5% Sheerweave 5000 *(R10_Q51, S77, S84)*	98"	NO	NO	Non-Railroaded								
				Maximum Width	96"	88"	88"	96"	96"	96"	96"	96"
					Maximum Height							
				For Shade Widths to 54"	144"	90"	90"	54"	90"	78"	144"	126"
				For Shade Widths to 60"	144"	90"	90"	54"	90"	78"	144"	126"
				For Shade Widths to 66"	144"	90"	90"	54"	90"	78"	144"	126"
				For Shade Widths to 72"	144"	90"	90"	54"	90"	78"	144"	126"
				For Shade Widths to 78"	144"	90"	90"	54"	90"	78"	144"	126"
				For Shade Widths to 84"	126"	90"	90"	54"	90"	78"	126"	126"
				For Shade Widths to 88"	96"	90"	90"	54"	90"	78"	96"	96"
				For Shade Widths to 90"	96"	NA	NA	54"	90"	78"	96"	96"
				For Shade Widths over 90"	78"	NA	NA	54"	78"	78"	78"	78"
5% Sheerweave 5000 *(R10_Q43, S82)*	98"	NO	NO	Non-Railroaded								
				Maximum Width	96"	88"	88"	96"	96"	96"	96"	96"
					Maximum Height							
				For Shade Widths to 54"	144"	102"	102"	66"	102"	90"	144"	144"
				For Shade Widths to 60"	144"	102"	102"	66"	102"	90"	144"	144"
				For Shade Widths to 66"	144"	102"	102"	66"	102"	90"	144"	144"
				For Shade Widths to 72"	144"	102"	102"	66"	102"	90"	144"	144"
				For Shade Widths to 78"	144"	102"	102"	66"	102"	90"	144"	144"
				For Shade Widths to 84"	126"	102"	102"	66"	102"	90"	126"	126"
				For Shade Widths to 88"	96"	96"	96"	66"	96"	90"	96"	96"
				For Shade Widths to 90"	96"	NA	NA	66"	96"	90"	96"	96"
				For Shade Widths over 90"	78"	NA	NA	66"	78"	78"	78"	78"

Minimum and Maximum Standards

Please Note: Shade sizes that are wider than the fabric roll width indicated will be made with the fabric turned width for length (railroaded). The maximum width for non-railroaded shades is the roll width unless otherwise noted.

Minimum:	Width	Height
ST30WF	29"	12"

Fabrics turned width for length will have a visible seam when fabricated longer than their maximum roll width less 10". Fabrics turned width for length may have an edge curl. This is not considered a defect in the product.

Material Name	Roll Width	Railroad Option	Splice /Seam		Motorized Shade without Top Treament	Motorized Shade Deluxe Valance	Motorized Shade Fabric Valance	Motorized Shade with Medium Cassette	Motorized Shade with Large Cassette	Motorized Shade with 3" Fascia	Motorized Shade with 4" Fascia	Motorized Shade with Pocket Headrail
7% Global Screen	118"	YES	YES	Non-Railroaded								
				Maximum Width	108"	108"	108"	108"	108"	108"	108"	108"
					Maximum Height							
				For Shade Widths to 84"	144"	144"	144"	126"	144"	144"	144"	144"
				For Shade Widths to 90"	138"	138"	138"	126"	138"	138"	138"	138"
				For Shade Widths to 96"	108"	108"	108"	108"	108"	108"	108"	108"
				For Shade Widths to 102"	84"	84"	84"	84"	84"	84"	84"	84"
				For Shade Widths to 108"	66"	66"	66"	66"	66"	66"	66"	66"
				Railroaded								
				Maximum Width	108"	108"	108"	108"	108"	108"	108"	108"
					Maximum Height							
				For Shade Widths to 84"	144"	144"	144"	126"	144"	144"	144"	144"
				For Shade Widths to 90"	138"	138"	138"	126"	138"	138"	138"	138"
				For Shade Widths to 96"	108"	108"	108"	108"	108"	108"	108"	108"
				For Shade Widths to 102"	84"	84"	84"	84"	84"	84"	84"	84"
				For Shade Widths to 108"	66"	66"	66"	66"	66"	66"	66"	66"
7% Sheerweave 5000 *(R34_Q46)*	98"	NO	NO	Non-Railroaded								
				Maximum Width	98"	88"	88"	98"	98"	98"	98"	98"
					Maximum Height							
				For Shade Widths to 72"	144"	102"	102"	66"	102"	90"	144"	144"
				For Shade Widths to 84"	126"	102"	102"	66"	102"	90"	126"	126"
				For Shade Widths to 88"	96"	96"	96"	66"	96"	90"	96"	96"
				For Shade Widths to 90"	96"	NA	NA	66"	96"	90"	96"	96"
				For Shade Widths over 90"	60"	NA	NA	60"	60"	60"	60"	60"
7% Sheerweave 5000 *(R34_08, 09)*	98"	NO	NO	Non-Railroaded								
				Maximum Width	98"	88"	88"	98"	98"	98"	98"	98"
					Maximum Height							
				For Shade Widths to 72"	144"	144"	144"	78"	126"	108"	144"	144"
				For Shade Widths to 84"	126"	144"	144"	78"	126"	108"	126"	126"
				For Shade Widths to 88"	96"	138"	138"	78"	96"	96"	96"	96"
				For Shade Widths to 90"	96"	NA	NA	78"	96"	96"	96"	96"
				For Shade Widths to 96"	78"	NA	NA	78"	78"	78"	78"	78"
				For Shade Widths over 96"	60"	NA	NA	60"	60"	60"	60"	60"
7% Sheerweave 5000 *(R34_S73)*	98"	NO	NO	Non-Railroaded								
				Maximum Width	96"	88"	88"	96"	96"	96"	96"	96"
					Maximum Height							
				For Shade Widths to 54"	144"	96"	96"	60"	96"	84"	144"	138"
				For Shade Widths to 60"	144"	96"	96"	60"	96"	84"	144"	138"
				For Shade Widths to 66"	144"	96"	96"	60"	96"	84"	144"	138"
				For Shade Widths to 72"	144"	96"	96"	60"	96"	84"	144"	138"
				For Shade Widths to 78"	144"	96"	96"	60"	96"	84"	144"	138"
				For Shade Widths to 84"	126"	96"	96"	60"	96"	84"	126"	126"
				For Shade Widths to 88"	96"	96"	96"	60"	96"	84"	96"	96"
				For Shade Widths to 90"	96"	NA	NA	60"	96"	84"	96"	96"
				For Shade Widths over 90"	78"	NA	NA	60"	78"	78"	78"	78"
10% E Screen	122"	YES	YES	Non-Railroaded								
				Maximum Width	108"	108"	108"	108"	108"	108"	108"	108"
					Maximum Height							
				For Shade Widths to 84"	144"	144"	144"	138"	144"	144"	144"	144"
				For Shade Widths to 90"	138"	138"	138"	138"	138"	138"	138"	138"
				For Shade Widths to 96"	108"	108"	108"	108"	108"	108"	108"	108"
				For Shade Widths to 102"	84"	84"	84"	84"	84"	84"	84"	84"
				For Shade Widths over 102"	66"	66"	66"	66"	66"	66"	66"	66"
				Railroaded								
				Maximum Width	108"	108"	108"	108"	108"	108"	108"	108"
					Maximum Height							
				For Shade Widths to 84"	144"	144"	144"	138"	144"	144"	144"	144"
				For Shade Widths to 90"	138"	138"	138"	138"	138"	138"	138"	138"
				For Shade Widths to 96"	108"	108"	108"	108"	108"	108"	108"	108"
				For Shade Widths to 102"	84"	84"	84"	84"	84"	84"	84"	84"
				For Shade Widths over 102"	66"	66"	66"	66"	66"	66"	66"	66"

Minimum and Maximum Standards

Please Note: Shade sizes that are wider than the fabric roll width indicated will be made with the fabric turned width for length (railroaded). The maximum width for non-railroaded shades is the roll width unless otherwise noted.

Minimum:	Width	Height
ST30WF	29"	12"

Fabrics turned width for length will have a visible seam when fabricated longer than their maximum roll width less 10". Fabrics turned width for length may have an edge curl. This is not considered a defect in the product.

Material Name	Roll Width	Railroad Option	Splice /Seam		Motorized Shade without Top Treament	Motorized Shade Deluxe Valance	Motorized Shade Fabric Valance	Motorized Shade with Medium Cassette	Motorized Shade with Large Cassette	Motorized Shade with 3" Fascia	Motorized Shade with 4" Fascia	Motorized Shade with Pocket Headrail
10% Sheerweave 2360	126"	NO	NO	Non-Railroaded								
				Maximum Width	102"	102"	102"	102"	102"	102"	102"	102"
					Maximum Height							
				For Shade Widths to 66"	144"	144"	144"	138"	144"	144"	144"	144"
				For Shade Widths to 72"	144"	144"	144"	138"	144"	144"	144"	144"
				For Shade Widths to 78"	144"	144"	144"	138"	144"	144"	144"	144"
				For Shade Widths to 84"	144"	144"	144"	138"	144"	144"	144"	144"
				For Shade Widths to 90"	138"	138"	138"	138"	138"	138"	138"	138"
				For Shade Widths to 96"	108"	108"	108"	102"	108"	108"	108"	108"
				For Shade Widths to 102"	84"	84"	84"	84"	84"	84"	84"	84"
10% Sheerweave 4100	98"	YES	YES	Non-Railroaded								
				Maximum Width	96"	88"	88"	96"	96"	96"	96"	96"
					Maximum Height							
				For Shade Widths to 54"	144"	120"	120"	78"	120"	108"	144"	144"
				For Shade Widths to 60"	144"	120"	120"	78"	120"	108"	144"	144"
				For Shade Widths to 66"	144"	120"	120"	78"	120"	108"	144"	144"
				For Shade Widths to 72"	144"	120"	120"	78"	120"	108"	144"	144"
				For Shade Widths to 78"	144"	120"	120"	78"	120"	108"	144"	144"
				For Shade Widths to 84"	126"	120"	120"	78"	120"	108"	126"	126"
				For Shade Widths to 88"	96"	96"	96"	78"	96"	96"	96"	96"
				For Shade Widths to 90"	96"	N/A	N/A	78"	96"	96"	96"	96"
				For Shade Widths to 96"	78"	N/A	N/A	78"	78"	78"	78"	78"
				Railroaded								
				Maximum Width	96"	96"	96"	96"	96"	96"	96"	96"
					Maximum Height							
				For Shade Widths to 54"	120"	120"	120"	78"	120"	108"	120"	120"
				For Shade Widths to 60"	120"	120"	120"	78"	120"	108"	120"	120"
				For Shade Widths to 66"	120"	120"	120"	78"	120"	108"	120"	120"
				For Shade Widths to 72"	120"	120"	120"	78"	120"	108"	120"	120"
				For Shade Widths to 78"	120"	120"	120"	78"	120"	108"	120"	120"
				For Shade Widths to 84"	120"	120"	120"	78"	120"	108"	120"	120"
				For Shade Widths to 90"	96"	96"	96"	78"	96"	96"	96"	96"
				For Shade Widths to 96"	78"	78"	78"	78"	78"	78"	78"	78"
10% Sheerweave 5000 *(R26_03)*	98"	NO	NO	Non-Railroaded								
				Maximum Width	98"	88"	88"	98"	98"	98"	98"	98"
					Maximum Height							
				For Shade Widths to 72"	144"	90"	90"	54"	90"	78"	144"	126"
				For Shade Widths to 84"	126"	90"	90"	54"	90"	78"	126"	126"
				For Shade Widths to 88"	96"	90"	90"	54"	90"	78"	96"	96"
				For Shade Widths to 90"	96"	NA	NA	54"	90"	78"	96"	96"
				For Shade Widths over 90"	60"	NA	NA	54"	60"	60"	60"	60"
10% Sheerweave 5000 *(R26_U16, U24, U28, U29)*	98"	NO	NO	Non-Railroaded								
				Maximum Width	96"	88"	88"	96"	96"	96"	96"	96"
					Maximum Height							
				For Shade Widths to 54"	144"	96"	96"	60"	96"	90"	144"	144"
				For Shade Widths to 60"	144"	96"	96"	60"	96"	90"	144"	144"
				For Shade Widths to 66"	144"	96"	96"	60"	96"	90"	144"	144"
				For Shade Widths to 72"	144"	96"	96"	60"	96"	90"	144"	144"
				For Shade Widths to 78"	144"	96"	96"	60"	96"	90"	144"	144"
				For Shade Widths to 84"	126"	96"	96"	60"	96"	90"	126"	126"
				For Shade Widths to 88"	96"	96"	96"	60"	96"	90"	96"	96"
				For Shade Widths to 90"	96"	NA	NA	60"	96"	90"	96"	96"
				For Shade Widths over 90"	78"	NA	NA	60"	78"	78"	78"	78"

Minimum and Maximum Standards

Please Note: Shade sizes that are wider than the fabric roll width indicated will be made with the fabric turned width for length (railroaded). The maximum width for non-railroaded shades is the roll width unless otherwise noted.

Minimum:	Width	Height
ST30WF	29"	12"

Fabrics turned width for length will have a visible seam when fabricated longer than their maximum roll width less 10". Fabrics turned width for length may have an edge curl. This is not considered a defect in the product.

Material Name	Roll Width	Railroad Option	Splice /Seam		Motorized Shade without Top Treament	Motorized Shade Deluxe Valance	Motorized Shade Fabric Valance	Motorized Shade with Medium Cassette	Motorized Shade with Large Cassette	Motorized Shade with 3" Fascia	Motorized Shade with 4" Fascia	Motorized Shade with Pocket Headrail
Alexandria	78"	NO	NO	Non-Railroaded								
				Maximum Width	78"	68"	68"	78"	78"	78"	78"	78"
					Maximum Height							
				For Shade Widths to 68"	144"	144"	144"	144"	144"	144"	144"	144"
				For Shade Widths to 78"	144"	NA	NA	144"	144"	144"	144"	144"
Astaire	94"	NO	NO	Non-Railroaded								
				Maximum Width	94"	NA	NA	94"	94"	94"	94"	94"
					Maximum Height							
				For Shade Widths to 94"	144"	NA	NA	78"	120"	108"	144"	144"
Avila R Blackout	118"	YES	YES	Non-Railroaded								
				Maximum Width	108"	108"	108"	108"	108"	108"	108"	108"
					Maximum Height							
				For Shade Widths to 84"	144"	144"	144"	144"	144"	144"	144"	144"
				For Shade Widths to 90"	138"	138"	138"	138"	138"	138"	138"	138"
				For Shade Widths to 96"	108"	108"	108"	108"	108"	108"	108"	108"
				For Shade Widths over 96"	66"	66"	66"	66"	66"	66"	66"	66"
				Railroaded								
				Maximum Width	108"	108"	108"	108"	108"	108"	108"	108"
					Maximum Height							
				For Shade Widths to 90"	120"	120"	120"	120"	120"	120"	120"	120"
				For Shade Widths to 96"	108"	108"	108"	108"	108"	108"	108"	108"
				For Shade Widths over 96"	66"	66"	66"	66"	66"	66"	66"	66"
Baroque	78"	NO	NO	Non-Railroaded								
				Maximum Width	78"	68"	68"	78"	78"	78"	78"	78"
					Maximum Height							
				For Shade Widths to 68"	144"	144"	144"	144"	144"	144"	144"	144"
				For Shade Widths to 78"	144"	NA	NA	144"	144"	144"	144"	144"
Blackout - Solid	72"	YES	YES	Non-Railroaded								
				Maximum Width	72"	62"	62"	72"	72"	72"	72"	72"
					Maximum Height							
				For Shade Widths to 62"	144"	144"	NA	144"	144"	144"	144"	144"
				For Shade Widths to 72"	144"	NA	NA	144"	144"	144"	144"	144"
					*Fabric and Deluxe valance - max shade size is 62" x 144"							
				Railroaded								
				Maximum Width	102"	102"	102"	102"	102"	102"	102"	102"
					Maximum Height							
				For Shade Widths to 90"	130"	130"	NA	130"	130"	130"	130"	130"
				For Shade Widths to 96"	108"	108"	NA	108"	108"	108"	108"	108"
				For Shade Widths to 102"	84"	84"	NA	84"	84"	84"	84"	84"
Brilliance	118"	NO	NO	Non-Railroaded								
				Maximum Width	118"	108"	108"	118"	118"	118"	118"	118"
					Maximum Height							
				For Shade Widths to 96"	144"	144"	144"	144"	144"	144"	144"	144"
				For Shade Widths over 96"	60"	60"	60"	60"	60"	60"	60"	60"
Brilliance Blackout	118"	NO	NO	Non-Railroaded								
				Maximum Width	108"	108"	108"	108"	108"	108"	108"	108"
					Maximum Height							
				For Shade Widths to 84"	144"	144"	144"	114"	144"	144"	144"	144"
				For Shade Widths to 90"	138"	138"	138"	114"	138"	138"	138"	138"
				For Shade Widths to 96"	108"	108"	108"	108"	108"	108"	108"	108"
				For Shade Widths over 96"	66"	66"	66"	66"	66"	66"	66"	66"

Minimum and Maximum Standards

Please Note: Shade sizes that are wider than the fabric roll width indicated will be made with the fabric turned width for length (railroaded). The maximum width for non-railroaded shades is the roll width unless otherwise noted.

Minimum:	Width	Height
ST30WF	29"	12"

Fabrics turned width for length will have a visible seam when fabricated longer than their maximum roll width less 10". Fabrics turned width for length may have an edge curl. This is not considered a defect in the product.

Material Name	Roll Width	Railroad Option	Splice /Seam		Motorized Shade without Top Treament	Motorized Shade Deluxe Valance	Motorized Shade Fabric Valance	Motorized Shade with Medium Cassette	Motorized Shade with Large Cassette	Motorized Shade with 3" Fascia	Motorized Shade with 4" Fascia	Motorized Shade with Pocket Headrail
Carrara	110"	NO	NO	Non-Railroaded								
				Maximum Width	110"	100"	100"	110"	110"	110"	110"	110"
					Maximum Height							
				For Shade Widths to 66"	144"	144"	144"	144"	144"	144"	144"	144"
				For Shade Widths to 78"	144"	144"	144"	144"	144"	144"	144"	144"
				For Shade Widths to 90"	138"	138"	138"	138"	138"	138"	138"	138"
				For Shade Widths to 100"	84"	84"	84"	84"	84"	84"	84"	84"
				For Shade Widths to 102"	84"	NA	NA	84"	84"	84"	84"	84"
				For Shade Widths to 108"	66"	NA	NA	66"	66"	66"	66"	66"
				For Shade Widths to 110"	48"	NA	NA	48"	48"	48"	48"	48"
Carrara Blackout	110"	NO	NO	Non-Railroaded								
				Maximum Width	102"	100"	100"	102"	102"	102"	102"	102"
					Maximum Height							
				For Shade Widths to 72"	144"	144"	144"	96"	144"	132"	144"	144"
				For Shade Widths to 84"	126"	126"	126"	96"	126"	126"	126"	126"
				For Shade Widths to 90"	96"	96"	96"	96"	96"	96"	96"	96"
				For Shade Widths to 96"	78"	78"	78"	78"	78"	78"	78"	78"
				For Shade Widths over 96"	60"	60"	60"	60"	60"	60"	60"	60"
Claudio	110"	NO	NO	Non-Railroaded								
				Maximum Width	110"	100"	100"	110"	110"	110"	110"	110"
					Maximum Height							
				For Shade Widths to 96"	144"	144"	144"	144"	144"	144"	144"	144"
				For Shade Widths over 96"	84"	144"	144"	84"	84"	84"	84"	84"
Claudio Blackout	110"	NO	NO	Non-Railroaded								
				Maximum Width	108"	100"	100"	108"	108"	108"	108"	108"
					Maximum Height							
				For Shade Widths to 84"	144"	144"	144"	114"	144"	144"	144"	144"
				For Shade Widths to 90"	138"	138"	138"	114"	138"	138"	138"	138"
				For Shade Widths to 96"	108"	108"	108"	108"	108"	108"	108"	108"
				For Shade Widths over 96"	66"	66"	66"	66"	66"	66"	66"	66"
Cusco	110"	YES	YES	Non-Railroaded								
				Maximum Width	102"	100"	100"	102"	102"	102"	102"	102"
					Maximum Height							
				For Shade Widths to 84"	144"	144"	144"	132"	144"	144"	144"	144"
				For Shade Widths to 90"	138"	138"	138"	132"	138"	138"	138"	138"
				For Shade Widths to 96"	108"	108"	108"	108"	108"	108"	108"	108"
				For Shade Widths to 100"	84"	84"	84"	84"	84"	84"	84"	84"
				For Shade Widths to 102"	84"	NA	NA	84"	84"	84"	84"	84"
				Railroaded								
				Maximum Width	102"	102"	102"	102"	102"	102"	102"	102"
					Maximum Height							
				For Shade Widths to 84"	144"	144"	144"	132"	144"	144"	144"	144"
				For Shade Widths to 90"	138"	138"	138"	132"	138"	138"	138"	138"
				For Shade Widths to 96"	108"	108"	108"	108"	108"	108"	108"	108"
				For Shade Widths to 102"	84"	84"	84"	84"	84"	84"	84"	84"
Darien	90"	NO	NO	Non-Railroaded								
				Maximum Width	90"	80"	80"	90"	90"	90"	90"	90"
					Maximum Height							
				For Shade Widths to 80"	144"	144"	144"	144"	144"	144"	144"	144"
				For Shade Widths to 90"	144"	NA	NA	144"	144"	144"	144"	144"
Drizzle	94"	YES	YES	Non-Railroaded								
				Maximum Width	94"	84"	84"	94"	94"	94"	94"	94"
					Maximum Height							
				For Shade Widths to 68"	144"	144"	144"	144"	144"	144"	144"	144"
				For Shade Widths to 78"	144"	144"	144"	144"	144"	144"	144"	144"
				For Shade Widths to 84"	144"	144"	144"	144"	144"	144"	144"	144"
				For Shade Widths to 90"	144"	NA	NA	144"	144"	144"	144"	144"
				For Shade Widths over 90"	144"	NA	NA	144"	144"	144"	144"	144"
				Railroaded								
				Maximum Width	120"	120"	120"	120"	120"	120"	120"	120"
					Maximum Height							
				For Shade Widths to 78"	144"	144"	144"	144"	144"	144"	144"	144"
				For Shade Widths to 96"	120"	120"	120"	120"	120"	120"	120"	120"
				For Shade Width to over 96"	60"	60"	60"	60"	60"	60"	60"	60"

Minimum and Maximum Standards

Please Note: Shade sizes that are wider than the fabric roll width indicated will be made with the fabric turned width for length (railroaded). The maximum width for non-railroaded shades is the roll width unless otherwise noted.

Minimum:	Width	Height
ST30WF	29"	12"

Fabrics turned width for length will have a visible seam when fabricated longer than their maximum roll width less 10". Fabrics turned width for length may have an edge curl. This is not considered a defect in the product.

Material Name	Roll Width	Railroad Option	Splice /Seam		Motorized Shade without Top Treament	Motorized Shade Deluxe Valance	Motorized Shade Fabric Valance	Motorized Shade with Medium Cassette	Motorized Shade with Large Cassette	Motorized Shade with 3" Fascia	Motorized Shade with 4" Fascia	Motorized Shade with Pocket Headrail
Fiona	78"	NO	NO	Non-Railroaded								
				Maximum Width	78"	68"	68"	78"	78"	78"	78"	78"
					Maximum Height							
				For Shade Widths to 68"	144"	144"	144"	144"	144"	144"	144"	144"
				For Shade Widths to 78"	144"	NA	NA	144"	144"	144"	144"	144"
Flocke Blackout	94"	YES	YES	Non-Railroaded								
				Maximum Width	94"	84"	84"	94"	94"	94"	94"	94"
					Maximum Height							
				For Shade Widths to 72"	144"	144"	144"	126"	144"	144"	144"	144"
				For Shade Widths to 84"	126"	126"	126"	126"	126"	126"	126"	126"
				For Shade Widths to 90"	96"	NA	NA	96"	96"	96"	96"	96"
				For Shade Widths over 90"	78"	NA	NA	78"	78"	78"	78"	78"
				Railroaded								
				Maximum Width	102"	102"	102"	102"	102"	102"	102"	102"
					Maximum Height							
				For Shade Widths to 72"	144"	144"	144"	126"	144"	144"	144"	144"
				For Shade Widths to 84"	126"	126"	126"	126"	126"	126"	126"	126"
				For Shade Widths to 90"	96"	96"	96"	96"	96"	96"	96"	96"
				For Shade Widths over 90"	60"	60"	60"	60"	60"	60"	60"	60"
Hayworth	98"	YES	YES	Non-Railroaded								
				Maximum Width	98"	88"	88"	98"	98"	98"	98"	98"
					Maximum Height							
				For Shade Widths to 88"	144"	144"	144"	144"	144"	144"	144"	144"
				For Shade Widths over 88"	144"	NA	NA	144"	144"	144"	144"	144"
				Railroaded								
				Maximum Width	120"	120"	120"	120"	120"	120"	120"	120"
					Maximum Height							
				For Shade Widths to 102"	144"	144"	144"	144"	144"	144"	144"	144"
				For Shade Widths to 108"	108"	108"	108"	108"	108"	108"	108"	108"
				For Shade Widths to 114"	84"	84"	84"	84"	84"	84"	84"	84"
				For Shade Widths to 120"	60"	60"	60"	60"	60"	60"	60"	60"
Illusion	72"	YES	NO	Non-Railroaded								
				Maximum Width	72"	62"	62"	72"	72"	72"	72"	72"
					Maximum Height							
				For Shade Widths to 62"	144"	144"	144"	144"	144"	144"	144"	144"
				For Shade Widths to 72"	144"	NA	NA	144"	144"	144"	144"	144"
				Railroaded								
				Maximum Width	120"	120"	120"	120"	120"	120"	120"	120"
					Maximum Height							
				For Shade Widths to max width	60"	60"	60"	60"	60"	60"	60"	60"
Jasper	110"	YES	YES	Non-Railroaded								
				Maximum Width	108"	100"	100"	108"	108"	108"	108"	108"
					Maximum Height							
				For Shade Widths to 84"	144"	144"	144"	144"	144"	144"	144"	144"
				For Shade Widths to 90"	138"	138"	138"	138"	138"	138"	138"	138"
				For Shade Widths to 96"	108"	108"	108"	108"	108"	108"	108"	108"
				For Shade Widths to 100"	84"	84"	84"	84"	84"	84"	84"	84"
				For Shade Widths over 100"	66"	N/A	N/A	66"	66"	66"	66"	66"
				Railroaded								
				Maximum Width	108"	108"	108"	108"	108"	108"	108"	108"
					Maximum Height							
				For Shade Widths to 84"	144"	144"	144"	144"	144"	144"	144"	144"
				For Shade Widths to 90"	138"	138"	138"	138"	138"	138"	138"	138"
				For Shade Widths over 96"	108"	108"	108"	108"	108"	108"	108"	108"
				For Shade Widths over 96"	66"	66"	66"	66"	66"	66"	66"	66"

Minimum and Maximum Standards

Please Note: Shade sizes that are wider than the fabric roll width indicated will be made with the fabric turned width for length (railroaded). The maximum width for non-railroaded shades is the roll width unless otherwise noted.

Minimum:	Width	Height
ST30WF	29"	12"

Fabrics turned width for length will have a visible seam when fabricated longer than their maximum roll width less 10". Fabrics turned width for length may have an edge curl. This is not considered a defect in the product.

Material Name	Roll Width	Railroad Option	Splice /Seam		Motorized Shade without Top Treament	Motorized Shade Deluxe Valance	Motorized Shade Fabric Valance	Motorized Shade with Medium Cassette	Motorized Shade with Large Cassette	Motorized Shade with 3" Fascia	Motorized Shade with 4" Fascia	Motorized Shade with Pocket Headrail
Linview	122"	YES	YES	Non-Railroaded								
				Maximum Width	108"	108"	108"	108"	108"	108"	108"	108"
					Maximum Height							
				For Shade Widths to 96"	144"	144"	144"	144"	144"	144"	144"	144"
				For Shade Widths to 102"	144"	144"	144"	144"	144"	144"	144"	144"
				For Shade Widths over 102"	108"	108"	108"	108"	108"	108"	108"	108"
				Railroaded								
				Maximum Width	108"	108"	108"	108"	108"	108"	108"	108"
					Maximum Height							
				For Shade Widths to 96"	120"	120"	120"	120"	120"	120"	120"	120"
				For Shade Widths to 102"	120"	120"	120"	120"	120"	120"	120"	120"
				For Shade Widths over 102"	108"	108"	108"	108"	108"	108"	108"	108"
Linview Blackout	94"	NO	NO	Non-Railroaded								
				Maximum Width	94"	84"	84"	94"	94"	94"	94"	94"
					Maximum Height							
				For Shade Widths to 84"	144"	144"	144"	144"	144"	144"	144"	144"
				For Shade Widths to 90"	138"	NA	NA	138"	138"	138"	138"	138"
				For Shade Widths over 90"	108"	NA	NA	108"	108"	108"	108"	108"
Montero	94"	NO	NO	Non-Railroaded								
				Maximum Width	94"	84"	84"	94"	94"	94"	94"	94"
					Maximum Height							
				For Shade Widths to 84"	144"	144"	144"	126"	144"	144"	144"	144"
				For Shade Widths to 90"	138"	NA	NA	126"	138"	138"	138"	138"
				For Shade Widths over 90"	108"	NA	NA	108"	108"	108"	108"	108"
Moravia	96"	NO	NO	Non-Railroaded								
				Maximum Width	96"	86"	86"	96"	96"	96"	96"	96"
					Maximum Height							
				For Shade Widths to 86"	144"	144"	144"	138"	144"	144"	144"	144"
				For Shade Widths over 86"	144"	NA	NA	138"	144"	144"	144"	144"
Santa Cruz	94"	NO	NO	Non-Railroaded								
				Maximum Width	94"	84"	84"	94"	94"	94"	94"	94"
					Maximum Height							
				For Shade Widths to 84"	144"	144"	144"	138"	144"	144"	144"	144"
				For Shade Widths to 90"	138"	NA	NA	138"	138"	138"	138"	138"
				For Shade Widths over 90"	108"	NA	NA	108"	108"	108"	108"	108"
Santa Cruz Blackout	94"	NO	NO	Non-Railroaded								
				Maximum Width	94"	84"	84"	94"	94"	94"	94"	94"
					Maximum Height							
				For Shade Widths to 72"	144"	144"	144"	102"	144"	138"	144"	144"
				For Shade Widths to 84"	126"	126"	126"	102"	126"	126"	126"	126"
				For Shade Widths to 90"	96"	NA	NA	96"	96"	96"	96"	96"
				For Shade Widths over 90"	78"	NA	NA	78"	78"	78"	78"	78"
Scala Blackout	110"	YES	YES	Non-Railroaded								
				Maximum Width	102"	100"	100"	102"	102"	102"	102"	102"
					Maximum Height							
				For Shade Widths to 84"	144"	144"	NA	144"	144"	144"	144"	144"
				For Shade Widths to 90"	138"	138"	NA	138"	138"	138"	138"	138"
				For Shade Widths to 96"	108"	108"	NA	108"	108"	108"	108"	108"
				For Shade Widths to 100"	84"	84"	NA	84"	84"	84"	84"	84"
				For Shade Widths to 102"	84"	NA	NA	84"	84"	84"	84"	84"
				Railroaded								
				Maximum Width	102"	102"	102"	102"	102"	102"	102"	102"
					Maximum Height							
				For Shade Widths to 84"	144"	144"	NA	144"	144"	144"	144"	144"
				For Shade Widths to 90"	138"	138"	NA	138"	138"	138"	138"	138"
				For Shade Widths to 96"	108"	108"	NA	108"	108"	108"	108"	108"
				For Shade Widths to 102"	84"	84"	NA	84"	84"	84"	84"	84"

PRODUCT SIZE SPECIFICATIONS – REMOTELIFT™ SONESSE ULTRA 30 WIREFREE RTS LI-ION

Minimum and Maximum Standards
Please Note: Shade sizes that are wider than the fabric roll width indicated will be made with the fabric turned width for length (railroaded). The maximum width for non-railroaded shades is the roll width unless otherwise noted.

Minimum:	Width	Height
ST30WF	29"	12"

Fabrics turned width for length will have a visible seam when fabricated longer than their maximum roll width less 10". Fabrics turned width for length may have an edge curl. This is not considered a defect in the product.

Material Name	Roll Width	Railroad Option	Splice /Seam		Motorized Shade without Top Treament	Motorized Shade Deluxe Valance	Motorized Shade Fabric Valance	Motorized Shade with Medium Cassette	Motorized Shade with Large Cassette	Motorized Shade with 3" Fascia	Motorized Shade with 4" Fascia	Motorized Shade with Pocket Headrail
Sheerweave 7200R	118"	NO	NO	Non-Railroaded								
				Maximum Width	102"	102"	102"	102"	102"	102"	102"	102"
					Maximum Height							
				For Shade Widths to 66"	144"	144"	144"	114"	144"	144"	144"	144"
				For Shade Widths to 72"	144"	144"	144"	114"	144"	144"	144"	144"
				For Shade Widths to 78"	144"	144"	144"	114"	144"	144"	144"	144"
				For Shade Widths to 84"	144"	144"	144"	114"	144"	144"	144"	144"
				For Shade Widths to 90"	138"	138"	138"	114	138"	138"	138"	138"
				For Shade Widths to 96"	108"	108"	108"	108"	108"	108"	108"	108"
				For Shade Widths to 102"	84"	84"	84"	84"	84"	84"	84"	84"
Sheerweave 7250R	118"	NO	NO	Non-Railroaded								
				Maximum Width	96"	96"	96"	96"	96"	96"	96"	96"
					Maximum Height							
				For Shade Widths to 96"	120"	120"	120"	120"	120"	120"	120"	120"
Sheerweave 7400	118"	NO	NO	Non-Railroaded								
				Maximum Width	96"	96"	96"	96"	96"	96"	96"	96"
					Maximum Height							
				For Shade Widths to 54"	144"	132"	132"	84"	132"	114"	144"	144"
				For Shade Widths to 60"	144"	132"	132"	84"	132"	114"	144"	144"
				For Shade Widths to 66"	144"	132"	132"	84"	132"	114"	144"	144"
				For Shade Widths to 72"	144"	132"	132"	84"	132"	114"	144"	144"
				For Shade Widths to 78"	144"	132"	132"	84"	132"	114"	144"	144"
				For Shade Widths to 84"	126"	126"	126"	84"	126"	114"	126"	126"
				For Shade Widths to 90"	96"	96"	96"	84"	96"	96"	96"	96"
				For Shade Widths to 96"	78"	78"	78"	78"	78"	78"	78"	78"
Sheerweave 7450	118"	NO	NO	Non-Railroaded								
				Maximum Width	108"	108"	108"	108"	108"	108"	108"	108"
					Maximum Height							
				For Shade Widths to 96"	144"	144"	144"	132"	144"	144"	144"	144"
				For Shade Widths to 102"	144"	144"	144"	132"	144"	144"	144"	144"
				For Shade Widths to 108"	108"	108"	108"	108"	108"	108"	108"	108"
Sheerweave 7500	118"	NO	NO	Non-Railroaded								
				Maximum Width	96"	96"	NA	96"	96"	96"	96"	96"
					Maximum Height							
				For Shade Widths to 66"	120"	120"	NA	120"	120"	120"	120"	120"
				For Shade Widths to 72"	120"	120"	NA	120"	120"	120"	120"	120"
				For Shade Widths to 78"	120"	120"	NA	120"	120"	120"	120"	120"
				For Shade Widths to 84"	120"	120"	NA	120"	120"	120"	120"	120"
				For Shade Widths to 90"	120"	120"	NA	120"	120"	120"	120"	120"
				For Shade Widths to 96"	108"	108"	NA	108"	108"	108"	108"	108"
Sheerweave 7500R	118"	NO	NO	Non-Railroaded								
				Maximum Width	102"	102"	NA	102"	102"	102"	102"	102"
					Maximum Height							
				For Shade Widths to 66"	144"	144"	NA	144"	144"	144"	144"	144"
				For Shade Widths to 72"	144"	144"	NA	144"	144"	144"	144"	144"
				For Shade Widths to 78"	144"	144"	NA	144"	144"	144"	144"	144"
				For Shade Widths to 84"	144"	144"	NA	144"	144"	144"	144"	144"
				For Shade Widths to 90"	138"	138"	NA	138"	138"	138"	138"	138"
				For Shade Widths to 96"	108"	108"	NA	108"	108"	108"	108"	108"
				For Shade Widths to 102"	84"	84"	NA	84"	84"	84"	84"	84"
Sheerweave 7600	118"	NO	NO	Non-Railroaded								
				Maximum Width	102"	102"	102"	102"	102"	102"	102"	102"
					Maximum Height							
				For Shade Widths to 66"	144"	144"	144"	126"	144"	144"	144"	144"
				For Shade Widths to 72"	144"	144"	144"	126"	144"	144"	144"	144"
				For Shade Widths to 78"	144"	144"	144"	126"	144"	144"	144"	144"
				For Shade Widths to 84"	144"	144"	144"	126"	144"	144"	144"	144"
				For Shade Widths to 90"	138"	138"	138"	126"	138"	138"	138"	138"
				For Shade Widths to 96"	108"	108"	108"	108"	108"	108"	108"	108"
				For Shade Widths to 102"	84"	84"	84"	84"	84"	84"	84"	84"
Sheerweave 7650	118"	NO	NO	Non-Railroaded								
				Maximum Width	108"	108"	108"	108"	108"	108"	108"	108"
					Maximum Height							
				For Shade Widths to 96"	144"	144"	144"	144"	144"	144"	144"	144"
				For Shade Widths to 102"	144"	144"	144"	144"	144"	144"	144"	144"
				For Shade Widths to 108"	108"	108"	108"	108"	108"	108"	108"	108"
Sheerweave 7700R	118"	NO	NO	Non-Railroaded								
				Maximum Width	96"	96"	96"	96"	96"	96"	96"	96"
					Maximum Height							
				For Shade Widths to 72"	144"	144"	144"	96"	144"	132"	144"	144"
				For Shade Widths to 78"	144"	144"	144"	96"	144"	132"	144"	144"
				For Shade Widths to 84"	126"	126"	126"	96"	126"	126"	126"	126"
				For Shade Widths to 90"	96"	96"	96"	96"	96"	96"	96"	96"
				For Shade Widths to 96"	78"	78"	78"	78"	78"	78"	78"	78"

PRODUCT SIZE SPECIFICATIONS – REMOTELIFT™ SONESSE ULTRA 30 WIREFREE RTS LI-ION

Minimum and Maximum Standards
Please Note: Shade sizes that are wider than the fabric roll width indicated will be made with the fabric turned width for length (railroaded). The maximum width for non-railroaded shades is the roll width unless otherwise noted.

Minimum:	Width	Height
ST30WF	29"	12"

Fabrics turned width for length will have a visible seam when fabricated longer than their maximum roll width less 10". Fabrics turned width for length may have an edge curl. This is not considered a defect in the product.

Material Name	Roll Width	Railroad Option	Splice /Seam		Motorized Shade without Top Treament	Motorized Shade Deluxe Valance	Motorized Shade Fabric Valance	Motorized Shade with Medium Cassette	Motorized Shade with Large Cassette	Motorized Shade with 3" Fascia	Motorized Shade with 4" Fascia	Motorized Shade with Pocket Headrail
Sheerweave 7750R	118"	NO	NO	**Non-Railroaded**								
				Maximum Width	98"	98"	98"	98"	98"	98"	98"	98"
					Maximum Height							
				For Shade Widths to 66"	120"	120"	120"	120"	120"	120"	120"	120"
				For Shade Widths to 72"	120"	120"	120"	120"	120"	120"	120"	120"
				For Shade Widths to 78"	120"	120"	120"	120"	120"	120"	120"	120"
				For Shade Widths to 84"	120"	120"	120"	120"	120"	120"	120"	120"
				For Shade Widths to 90"	120"	120"	120"	120"	120"	120"	120"	120"
				For Shade Widths to 96"	108"	108"	108"	108"	108"	108"	108"	108"
				For Shade Widths to 98"	84"	84"	84"	84"	84"	84"	84"	84"
Sorrento	108"	NO	NO	**Non-Railroaded**								
				Maximum Width	108"	98"	98"	108"	108"	108"	108"	108"
					Maximum Height							
				For Shade Widths to 96"	144"	144"	144"	108"	144"	144"	144"	144"
				For Shade Widths over 96"	108"	108"	108"	108"	108"	108"	108"	108"
Sunscreen (SW) 7000	118"	YES	YES	**Non-Railroaded**								
				Maximum Width	102"	102"	102"	102"	102"	102"	102"	102"
					Maximum Height							
				For Shade Widths to 72"	144"	144"	144"	96"	144"	132"	144"	144"
				For Shade Widths to 84"	126"	126"	126"	96"	126"	126"	126"	126"
				For Shade Widths to 90"	96"	96"	96"	96"	96"	96"	96"	96"
				For Shade Widths to 96"	78"	78"	78"	78"	78"	78"	78"	78"
				For Shade Widths over 96"	60"	60"	60"	60"	60"	60"	60"	60"
				Railroaded								
				Maximum Width	102"	102"	102"	102"	102"	102"	102"	102"
					Maximum Height							
				For Shade Widths to 72"	144"	144"	144"	96"	144"	132"	144"	144"
				For Shade Widths to 84"	126"	126"	126"	96"	126"	126"	126"	126"
				For Shade Widths to 90"	96"	96"	96"	96"	96"	96"	96"	96"
				For Shade Widths to 96"	78"	78"	78"	78"	78"	78"	78"	78"
				For Shade Widths over 96"	60"	60"	60"	60"	60"	60"	60"	60"
Tundra	94"	NO	NO	**Non-Railroaded**								
				Maximum Width	94"	84"	84"	94"	94"	94"	94"	94"
					Maximum Height							
				For Shade Widths to 84"	144"	144"	144"	144"	144"	144"	144"	144"
				For Shade Widths to 90"	144"	N/A	N/A	144"	144"	144"	144"	144"
				For Shade Widths to 94"	144"	N/A	N/A	144"	144"	144"	144"	144"
Tundra Blackout	94"	NO	NO	**Non-Railroaded**								
				Maximum Width	94"	84"	84"	94"	94"	94"	94"	94"
					Maximum Height							
				For Shade Widths to 66"	120"	120"	120"	120"	120"	120"	120"	120"
				For Shade Widths to 72"	120"	120"	120"	120"	120"	120"	120"	120"
				For Shade Widths to 78"	120"	120"	120"	120"	120"	120"	120"	120"
				For Shade Widths to 84"	120"	120"	120"	120"	120"	120"	120"	120"
				For Shade Widths to 90"	120"	NA	NA	120"	120"	120"	120"	120"
				For Shade Widths to 94"	108"	NA	NA	108"	108"	108"	108"	108"
Uptown *(R79_02)*	78"	YES	NO	**Non-Railroaded**								
				Maximum Width	78"	68"	68"	78"	78"	78"	78"	78"
					Maximum Height							
				For Shade Widths to 68"	144"	144"	144"	144"	144"	144"	144"	144"
				For Shade Widths to 78"	144"	NA	NA	144"	144"	144"	144"	144"
				Railroaded								
				Maximum Width	120"	120"	120"	120"	120"	120"	120"	120"
					Maximum Height							
				For Shade Widths to 102"	66"	66"	66"	66"	66"	66"	66"	66"
				For Shade Widths over 102"	60"	60"	60"	60"	60"	60"	60"	60"
				Non-Railroaded								
Uptown Room Darkening *(R79_01)*	78"	YES	NO	**Maximum Width**	78"	68"	68"	78"	78"	78"	78"	78"
					Maximum Height							
				For Shade Widths to 68"	144"	144"	144"	144"	144"	144"	144"	144"
				For Shade Widths to 78"	144"	NA	NA	144"	144"	144"	144"	144"
				Railroaded								
				Maximum Width	108"	108"	108"	108"	108"	108"	144"	108"
					Maximum Height							
				For Shade Widths to max width	66"	66"	66"	66"	66"	66"	66"	66"

Minimum and Maximum Standards

Please Note: Shade sizes that are wider than the fabric roll width indicated will be made with the fabric turned width for length (railroaded). The maximum width for non-railroaded shades is the roll width unless otherwise noted.

Minimum:	Width	Height
ST30WF	29"	12"

Fabrics turned width for length will have a visible seam when fabricated longer than their maximum roll width less 10". Fabrics turned width for length may have an edge curl. This is not considered a defect in the product.

Material Name	Roll Width	Railroad Option	Splice /Seam		Motorized Shade without Top Treament	Motorized Shade Deluxe Valance	Motorized Shade Fabric Valance	Motorized Shade with Medium Cassette	Motorized Shade with Large Cassette	Motorized Shade with 3" Fascia	Motorized Shade with 4" Fascia	Motorized Shade with Pocket Headrail
World Textures 1	78"	YES	YES	Non-Railroaded								
				Maximum Width	78"	68"	68"	78"	78"	78"	78"	78"
					Maximum Height							
				For Shade Widths to 68"	144"	144"	144"	138"	144"	144"	144"	144"
				For Shade Widths to 78"	144"	NA	NA	138"	144"	144"	144"	144"
				Railroaded								
				Maximum Width	108"	108"	108"	108"	108"	108"	108"	108"
					Maximum Height							
				For Shade Widths to 84"	144"	144"	144"	138"	144"	144"	144"	144"
				For Shade Widths to 90"	138"	138"	138"	138"	138"	138"	138"	138"
				For Shade Widths to 96"	108"	108"	108"	108"	108"	108"	108"	108"
				For Shade Widths to 102"	84"	84"	84"	84"	84"	84"	84"	84"
				For Shade Widths over 102"	66"	66"	66"	66"	66"	66"	66"	66"
World Textures 1 Blackout *(R50_01)*	78"	YES	YES	Non-Railroaded								
				Maximum Width	78"	68"	68"	78"	78"	78"	78"	78"
					Maximum Height							
				For Shade Widths to 68"	144"	144"	144"	114"	144"	144"	144"	144"
				For Shade Widths to 78"	144"	NA	NA	114"	144"	144"	144"	144"
				Railroaded								
				Maximum Width	102"	102"	102"	102"	102"	102"	102"	102"
					Maximum Height							
				For Shade Widths to 84"	144"	144"	144"	108"	144"	144"	144"	144"
				For Shade Widths to 90"	138"	138"	138"	108"	138"	138"	138"	138"
				For Shade Widths to 96"	108"	108"	108"	108"	108"	108"	108"	108"
				For Shade Widths to 102"	84"	84"	84"	84"	84"	84"	84"	84"
World Textures 2	80"	YES	YES	Non-Railroaded								
				Maximum Width	80"	70"	70"	80"	80"	80"	80"	80"
					Maximum Height							
				For Shade Widths to 70"	144"	138"	138"	84"	138"	120"	144"	144"
				For Shade Widths to 80"	144"	NA	NA	84"	138"	120"	144"	144"
				Railroaded								
				Maximum Width	102"	102"	102"	102"	102"	102"	102"	102"
					Maximum Height							
				For Shade Widths to 84"	144"	138"	138"	84"	138"	120"	144"	144"
				For Shade Widths to 90"	138"	138"	138"	84"	138"	120"	138"	138"
				For Shade Widths to 96"	108"	108"	108"	84"	108"	108"	108"	108"
				For Shade Widths to 102"	84"	84"	84"	84"	84"	84"	84"	84"
World Textures 2 Blackout *(R50_04,05)*	80"	YES	YES	Non-Railroaded								
				Maximum Width	80"	70"	70"	80"	80"	80"	80"	80"
					Maximum Height							
				For Shade Widths to 70"	144"	144"	144"	114"	144"	144"	144"	144"
				For Shade Widths to 80"	144"	NA	NA	114"	144"	144"	144"	144"
				Railroaded								
				Maximum Width	102"	102"	102"	102"	102"	102"	102"	102"
					Maximum Height							
				For Shade Widths to 84"	144"	144"	144"	114"	144"	144"	144"	144"
				For Shade Widths to 90"	138"	138"	138"	114"	138"	138"	138"	138"
				For Shade Widths to 96"	108"	108"	108"	108"	108"	108"	108"	108"
				For Shade Widths to 102"	84"	84"	84"	84"	84"	84"	84"	84"

PRODUCT SIZE SPECIFICATIONS – HARDWIRED MOTORIZATION

Minimum and Maximum Standards

Please Note: Shade sizes that are wider than the fabric roll width indicated will be made with the fabric turned width for length (railroaded). The maximum width for non-railroaded shades is the roll width unless otherwise noted.

Fabrics turned width for length will have a visible seam when fabricated longer than their maximum roll width less 10". Fabrics turned width for length may have an edge curl. This is not considered a defect in the product.

Motor Type	Motor Name	Min Width	Min Height	Weight Capacity
24v Low-Voltage	ST-30 Quiet	18-1/2"	12"	Lifts up to 23 lbs.
110v Hardwired	ST-50 Quiet	33"	12"	Lifts up to 52 lbs.
110v Hardwired	ST-50 Ultra Quiet	39"	12"	Lifts up to 52 lbs.

Note: 110v Motorized shades are available without top treatment, with 4" R-series Fascia, or with Pocket. Maximum width for each coupled shade is 120" and maximum overall width is 216". 4" R-series Fascia & Pocket will spliced in the center when width exceed 190".

Material Name	Roll Width	Railroad Option	Splice /Seam		Motorized Shade without Top Treament		Motorized Shade Deluxe Valance	Motorized Shade Fabric Valance	Motorized Shade with Medium Cassette	Motorized Shade with Large Cassette	Motorized Shade with 3" Fascia	Motorized Shade with 4" Fascia		Motorized Shade with Pocket Headrail	
					24v	110v	24v	24v	24v	24v	24v	24v	110v	24v	110v
1% E Screen	122"	YES	YES	Non-Railroaded											
				Maximum Width	102"	122"	102"	102"	102"	102"	102"	102"	122"	102"	122"
					Maximum Height										
				For Shade Widths to 84"	144"	144"	144"	144"	138"	144"	144"	144"	144"	144"	144"
				For Shade Widths to 90"	138"	144"	138"	138"	138"	138"	138"	138"	144"	138"	144"
				For Shade Widths to 96"	108"	144"	108"	108"	108"	108"	108"	108"	144"	108"	144"
				For Shade Widths to 102"	84"	144"	84"	84"	84"	84"	84"	84"	144"	84"	144"
				For Shade Widths over 102"	NA	144"	NA	NA	NA	NA	NA	NA	144"	NA	144"
				Railroaded											
				Maximum Width	102"	144"	102"	102"	102"	102"	102"	102"	144"	102"	144"
					Maximum Height										
				For Shade Widths to 84"	144"	144"	144"	144"	138"	144"	144"	144"	144"	144"	144"
				For Shade Widths to 90"	138"	144"	138"	138"	138"	138"	138"	138"	144"	138"	144"
				For Shade Widths to 96"	108"	144"	108"	108"	108"	108"	108"	108"	144"	108"	144"
				For Shade Widths to 102"	84"	144"	84"	84"	84"	84"	84"	84"	144"	84"	144"
				For Shade Widths over 102"	NA	144"	NA	NA	NA	NA	NA	NA	144"	NA	144"
1% Sheerweave 2500	126"	YES	YES	Non-Railroaded											
				Maximum Width	96"	126"	96"	96"	96"	96"	96"	96"	126"	96"	126"
					Maximum Height										
				For Shade Widths to 78"	144"	144"	144"	144"	114"	144"	144"	144"	144"	144"	144"
				For Shade Widths to 84"	126"	144"	126"	126"	114"	126"	126"	126"	144"	126"	144"
				For Shade Widths to 90"	96"	144"	96"	96"	96"	96"	96"	96"	144"	96"	144"
				For Shade Widths to 96"	78"	144"	78"	78"	78"	78"	78"	78"	144"	78"	144"
				For Shade Widths over 96"	NA	144"	NA	NA	NA	NA	NA	NA	144"	NA	118"
				Railroaded											
				Maximum Width	96"	144"	96"	96"	96"	96"	96"	96"	144"	96"	144"
					Maximum Height										
				For Shade Widths to 78"	144"	144"	144"	144"	114"	144"	144"	144"	144"	144"	144"
				For Shade Widths to 84"	126"	144"	126"	126"	114"	126"	126"	126"	144"	126"	144"
				For Shade Widths to 90"	96"	144"	96"	96"	96"	96"	96"	96"	144"	96"	144"
				For Shade Widths to 96"	78"	144"	78"	78"	78"	78"	78"	78"	144"	78"	144"
				For Shade Widths over 96"	NA	144"	NA	NA	NA	NA	NA	NA	144"	NA	118"
1% Sheerweave 2701	126"	YES	YES	Non-Railroaded											
				Maximum Width	102"	126"	102"	102"	102"	102"	102"	102"	126"	102"	126"
					Maximum Height										
				For Shade Widths to 72"	144"	144"	144"	144"	138"	144"	144"	144"	144"	144"	144"
				For Shade Widths to 84"	126"	144"	126"	126"	126"	126"	126"	126"	144"	126"	144"
				For Shade Widths to 90"	96"	144"	96"	96"	96"	96"	96"	96"	144"	96"	144"
				For Shade Widths to 96"	78"	144"	78"	78"	78"	78"	78"	78"	144"	78"	144"
				For Shade Widths over 96"	60"	144"	60"	60"	60"	60"	60"	60"	144"	60"	144"
				Railroaded											
				Maximum Width	102"	144"	102"	102"	102"	102"	102"	102"	144"	102"	144"
					Maximum Height										
				For Shade Widths to 72"	144"	144"	144"	144"	138"	144"	144"	144"	144"	144"	144"
				For Shade Widths to 84"	126"	144"	126"	126"	126"	126"	126"	126"	144"	126"	144"
				For Shade Widths to 90"	96"	144"	96"	96"	96"	96"	96"	96"	144"	96"	144"
				For Shade Widths to 96"	78"	144"	78"	78"	78"	78"	78"	78"	144"	78"	144"
				For Shade Widths over 96"	60"	144"	60"	60"	60"	60"	60"	60"	144"	60"	144"
1% Sheerweave 4901	98"	NO	NO	Non-Railroaded											
				Maximum Width	96"	98"	88"	88"	96"	96"	96"	96"	98"	96"	98"
					Maximum Height										
				For Shade Widths to 54"	144"	144"	144"	144"	96"	144"	126"	144"	144"	144"	144"
				For Shade Widths to 60"	144"	144"	144"	144"	96"	144"	126"	144"	144"	144"	144"
				For Shade Widths to 66"	144"	144"	144"	144"	96"	144"	126"	144"	144"	144"	144"
				For Shade Widths to 72"	144"	144"	144"	144"	96"	144"	126"	144"	144"	144"	144"
				For Shade Widths to 78"	144"	144"	144"	144"	96"	144"	126"	144"	144"	144"	144"
				For Shade Widths to 84"	126"	144"	126"	126"	96"	126"	126"	126"	144"	126"	144"
				For Shade Widths to 88"	96"	144"	96"	96"	96"	96"	96"	96"	144"	96"	144"
				For Shade Widths to 90"	96"	144"	N/A	N/A	96"	96"	96"	96"	144"	96"	144"
				For Shade Widths to 96"	78"	144"	N/A	N/A	78"	78"	78"	78"	144"	78"	144"
				For Shade Widths to 98"	NA	144"	N/A	N/A	NA	NA	NA	NA	144"	NA	144"

PRODUCT SIZE SPECIFICATIONS – HARDWIRED MOTORIZATION

Minimum and Maximum Standards

Please Note: Shade sizes that are wider than the fabric roll width indicated will be made with the fabric turned width for length (railroaded). The maximum width for non-railroaded shades is the roll width unless otherwise noted.

Fabrics turned width for length will have a visible seam when fabricated longer than their maximum roll width less 10". Fabrics turned width for length may have an edge curl. This is not considered a defect in the product.

Motor Type	Motor Name	Min Width	Min Height	Weight Capacity
24v Low-Voltage	ST-30 Quiet	18-1/2"	12"	Lifts up to 23 lbs.
110v Hardwired	ST-50 Quiet	33"	12"	Lifts up to 52 lbs.
110v Hardwired	ST-50 Ultra Quiet	39"	12"	Lifts up to 52 lbs.

Note: 110v Motorized shades are available without top treatment, with 4" R-series Fascia, or with Pocket. Maximum width for each coupled shade is 120" and maximum overall width is 216". 4" R-series Fascia & Pocket will spliced in the center when width exceed 190".

Material Name	Roll Width	Railroad Option	Splice /Seam		Motorized Shade without Top Treament		Motorized Shade Deluxe Valance	Motorized Shade Fabric Valance	Motorized Shade with Medium Cassette	Motorized Shade with Large Cassette	Motorized Shade with 3" Fascia	Motorized Shade with 4" Fascia		Motorized Shade with Pocket Headrail	
					24v	110v	24v	24v	24v	24v	24v	24v	110v	24v	110v
1% Sheerweave 5000	98"	NO	NO	Non-Railroaded											
				Maximum Width	96"	96"	86"	86"	96"	96"	96"	96"	96"	96"	96"
					Maximum Height										
				For Shade Widths to 78"	144"	144"	84"	84"	55"	84"	72"	144"	144"	126"	90"
				For Shade Widths to 84"	126"	144"	84"	84"	55"	84"	72"	126"	144"	126"	90"
				For Shade Widths to 86"	96"	144"	84"	84"	55"	84"	72"	96"	144"	96"	90"
				For Shade Widths to 90"	96"	144"	NA	NA	55"	84"	72"	96"	144"	96"	90"
				For Shade Widths to 96"	78"	144"	NA	NA	55"	78"	72"	78"	144"	78"	90"
1% Toka	118"	YES	YES	Non-Railroaded											
				Maximum Width	102"	118"	102"	102"	102"	102"	102"	102"	118"	102"	118"
					Maximum Height										
				For Shade Widths to 72"	144"	144"	144"	144"	96"	144"	132"	144"	144"	144"	144"
				For Shade Widths to 84"	126"	144"	126"	126"	96"	126"	126"	126"	144"	126"	144"
				For Shade Widths to 90"	96"	144"	96"	96"	96"	96"	96"	96"	144"	96"	144"
				For Shade Widths to 96"	78"	144"	78"	78"	78"	78"	78"	78"	144"	78"	144"
				For Shade Widths over 96"	60"	144"	60"	60"	60"	60"	60"	60"	144"	60"	114"
				Railroaded											
				Maximum Width	102"	144"	102"	102"	102"	102"	102"	102"	144"	102"	144"
					Maximum Height										
				For Shade Widths to 72"	144"	144"	144"	144"	96"	144"	132"	144"	144"	144"	144"
				For Shade Widths to 84"	126"	144"	126"	126"	96"	126"	126"	126"	144"	126"	144"
				For Shade Widths to 90"	96"	144"	96"	96"	96"	96"	96"	96"	144"	96"	144"
				For Shade Widths to 96"	78"	144"	78"	78"	78"	78"	78"	78"	144"	78"	144"
				For Shade Widths over 96"	60"	144"	60"	60"	60"	60"	60"	60"	144"	60"	102"
3% E Screen	122"	YES	YES	Non-Railroaded											
				Maximum Width	102"	122"	102"	102"	102"	102"	102"	102"	122"	102"	122"
					Maximum Height										
				For Shade Widths to 84"	144"	144"	144"	144"	144"	144"	144"	144"	144"	144"	144"
				For Shade Widths to 90"	138"	144"	138"	138"	138"	138"	138"	138"	144"	138"	144"
				For Shade Widths to 96"	108"	144"	108"	108"	108"	108"	108"	108"	144"	108"	144"
				For Shade Widths to 102"	84"	144"	84"	84"	84"	84"	84"	84"	144"	84"	144"
				For Shade Widths over 102"	NA	144"	NA	NA	NA	NA	NA	NA	144"	NA	144"
				Railroaded											
				Maximum Width	102"	144"	102"	102"	102"	102"	102"	102"	144"	102"	144"
					Maximum Height										
				For Shade Widths to 84"	144"	144"	144"	144"	144"	144"	144"	144"	144"	144"	144"
				For Shade Widths to 90"	138"	144"	138"	138"	138"	138"	138"	138"	144"	138"	144"
				For Shade Widths to 96"	108"	144"	108"	108"	108"	108"	108"	108"	144"	108"	144"
				For Shade Widths to 102"	84"	144"	84"	84"	84"	84"	84"	84"	144"	84"	144"
				For Shade Widths over 102"	NA	144"	NA	NA	NA	NA	NA	NA	144"	NA	144"
3% M Screen	122"	YES	YES	Non-Railroaded											
				Maximum Width	108"	122"	108"	108"	108"	108"	108"	108"	122"	108"	122"
					Maximum Height										
				For Shade Widths to 84"	144"	144"	144"	144"	144"	144"	144"	144"	144"	144"	144"
				For Shade Widths to 90"	138"	144"	138"	138"	138"	138"	138"	138"	144"	138"	144"
				For Shade Widths to 96"	108"	144"	108"	108"	108"	108"	108"	108"	144"	108"	144"
				For Shade Widths over 96"	66"	144"	66"	66"	66"	66"	66"	66"	144"	66"	144"
				Railroaded											
				Maximum Width	108"	144"	108"	108"	108"	108"	108"	108"	144"	108"	144"
					Maximum Height										
				For Shade Widths to 84"	144"	144"	144"	144"	144"	144"	144"	144"	144"	144"	144"
				For Shade Widths to 90"	138"	144"	138"	138"	138"	138"	138"	138"	144"	138"	144"
				For Shade Widths to 96"	108"	144"	108"	108"	108"	108"	108"	108"	144"	108"	144"
				For Shade Widths over 96"	66"	144"	66"	66"	66"	66"	66"	66"	144"	66"	144"

PRODUCT SIZE SPECIFICATIONS – HARDWIRED MOTORIZATION

Minimum and Maximum Standards

Please Note: Shade sizes that are wider than the fabric roll width indicated will be made with the fabric turned width for length (railroaded). The maximum width for non-railroaded shades is the roll width unless otherwise noted.

Fabrics turned width for length will have a visible seam when fabricated longer than their maximum roll width less 10". Fabrics turned width for length may have an edge curl. This is not considered a defect in the product.

Motor Type	Motor Name	Min Width	Min Height	Weight Capacity
24v Low-Voltage	ST-30 Quiet	18-1/2"	12"	Lifts up to 23 lbs.
110v Hardwired	ST-50 Quiet	33"	12"	Lifts up to 52 lbs.
110v Hardwired	ST-50 Ultra Quiet	39"	12"	Lifts up to 52 lbs.

Note: 110v Motorized shades are available without top treatment, with 4" R-series Fascia, or with Pocket. Maximum width for each coupled shade is 120" and maximum overall width is 216". 4" R-series Fascia & Pocket will spliced in the center when width exceed 190".

Material Name	Roll Width	Railroad Option	Splice /Seam		Motorized Shade without Top Treament		Motorized Shade Deluxe Valance	Motorized Shade Fabric Valance	Motorized Shade with Medium Cassette	Motorized Shade with Large Cassette	Motorized Shade with 3" Fascia	Motorized Shade with 4" Fascia		Motorized Shade with Pocket Headrail	
					24v	110v	24v	24v	24v	24v	24v	24v	110v	24v	110v
3% Sheerweave 2410	126"	YES	YES	Non-Railroaded											
				Maximum Width	102"	126"	102"	102"	102"	102"	102"	102"	126"	102"	126"
					Maximum Height										
				For Shade Widths to 72"	144"	144"	144"	144"	144"	144"	144"	144"	144"	144"	144"
				For Shade Widths to 84"	126"	144"	126"	126"	126"	126"	126"	126"	144"	126"	144"
				For Shade Widths to 90"	96"	144"	96"	96"	96"	96"	96"	96"	144"	96"	144"
				For Shade Widths to 96"	78"	144"	78"	78"	78"	78"	78"	78"	144"	78"	144"
				For Shade Widths over 96"	60"	144"	60"	60"	60"	60"	60"	60"	144"	60"	144"
				Railroaded											
				Maximum Width	102"	144"	102"	102"	102"	102"	102"	102"	144"	102"	144"
					Maximum Height										
				For Shade Widths to 72"	144"	144"	144"	144"	144"	144"	144"	144"	144"	144"	144"
				For Shade Widths to 84"	126"	144"	126"	126"	126"	126"	126"	126"	144"	126"	144"
				For Shade Widths to 90"	96"	144"	96"	96"	96"	96"	96"	96"	144"	96"	144"
				For Shade Widths to 96"	78"	144"	78"	78"	78"	78"	78"	78"	144"	78"	144"
				For Shade Widths over 96"	60"	144"	60"	60"	60"	60"	60"	60"	144"	60"	144"
3% Sheerweave 2703	126"	YES	YES	Non-Railroaded											
				Maximum Width	96"	124"	96"	96"	96"	96"	96"	96"	124"	96"	124"
					Maximum Height										
				For Shade Widths to 54"	144"	144"	144"	144"	96"	144"	126"	144"	144"	144"	144"
				For Shade Widths to 60"	144"	144"	144"	144"	96"	144"	126"	144"	144"	144"	144"
				For Shade Widths to 66"	144"	144"	144"	144"	96"	144"	126"	144"	144"	144"	144"
				For Shade Widths to 72"	144"	144"	144"	144"	96"	144"	126"	144"	144"	144"	144"
				For Shade Widths to 78"	144"	144"	144"	144"	96"	144"	126"	144"	144"	144"	144"
				For Shade Widths to 84"	126"	144"	126"	126"	96"	126"	126"	126"	144"	126"	144"
				For Shade Widths to 90"	96"	144"	96"	96"	96"	96"	96"	96"	144"	96"	144"
				For Shade Widths to 96"	78"	144"	78"	78"	78"	78"	78"	78"	144"	78"	144"
				For Shade Widths over 96"	NA	144"	NA	NA	NA	NA	NA	NA	144"	NA	96"
				Railroaded											
				Maximum Width	96"	144"	96"	96"	96"	96"	96"	96"	144"	96"	144"
					Maximum Height										
				For Shade Widths to 54"	144"	144"	144"	144"	96"	144"	126"	144"	144"	144"	144"
				For Shade Widths to 60"	144"	144"	144"	144"	96"	144"	126"	144"	144"	144"	144"
				For Shade Widths to 66"	144"	144"	144"	144"	96"	144"	126"	144"	144"	144"	144"
				For Shade Widths to 72"	144"	144"	144"	144"	96"	144"	126"	144"	144"	144"	144"
				For Shade Widths to 78"	144"	144"	144"	144"	96"	144"	126"	144"	144"	144"	144"
				For Shade Widths to 84"	126"	144"	126"	126"	96"	126"	126"	126"	144"	126"	144"
				For Shade Widths to 90"	96"	144"	96"	96"	96"	96"	96"	96"	144"	96"	144"
				For Shade Widths to 96"	78"	144"	78"	78"	78"	78"	78"	78"	144"	78"	144"
				For Shade Widths over 96"	NA	144"	NA	NA	NA	NA	NA	NA	144"	NA	96"
3% Sheerweave 4400	126"	YES	YES	Non-Railroaded											
				Maximum Width	102"	126"	102"	102"	102"	102"	102"	102"	126"	102"	126"
					Maximum Height										
				For Shade Widths to 78"	144"	144"	120"	120"	78"	120"	108"	144"	144"	144"	132"
				For Shade Widths to 84"	126"	144"	120"	120"	78"	120"	108"	126"	144"	126"	132"
				For Shade Widths to 90"	96"	144"	96"	96"	78"	96"	96"	96"	144"	96"	132"
				For Shade Widths to 96"	78"	144"	78"	78"	78"	78"	78"	78"	144"	78"	132"
				For Shade Widths over 96"	60"	144"	60"	60"	60"	60"	60"	60"	144"	60"	90"
				Railroaded											
				Maximum Width	102"	144"	102"	102"	102"	102"	102"	102"	144"	102"	144"
					Maximum Height										
				For Shade Widths to 78"	144"	144"	120"	120"	78"	120"	108"	144"	144"	144"	144"
				For Shade Widths to 84"	126"	144"	120"	120"	78"	120"	108"	126"	144"	126"	132"
				For Shade Widths to 90"	96"	144"	96"	96"	78"	96"	96"	96"	144"	96"	132"
				For Shade Widths to 96"	78"	144"	78"	78"	78"	78"	78"	78"	144"	78"	132"
				For Shade Widths over 96"	60"	144"	60"	60"	60"	60"	60"	60"	144"	60"	78"

PRODUCT SIZE SPECIFICATIONS – HARDWIRED MOTORIZATION

Minimum and Maximum Standards

Please Note: Shade sizes that are wider than the fabric roll width indicated will be made with the fabric turned width for length (railroaded). The maximum width for non-railroaded shades is the roll width unless otherwise noted.

Fabrics turned width for length will have a visible seam when fabricated longer than their maximum roll width less 10". Fabrics turned width for length may have an edge curl. This is not considered a defect in the product.

Motor Type	Motor Name	Min Width	Min Height	Weight Capacity
24v Low-Voltage	ST-30 Quiet	18-1/2"	12"	Lifts up to 23 lbs.
110v Hardwired	ST-50 Quiet	33"	12"	Lifts up to 52 lbs.
110v Hardwired	ST-50 Ultra Quiet	39"	12"	Lifts up to 52 lbs.

Note: 110v Motorized shades are available without top treatment, with 4" R-series Fascia, or with Pocket. Maximum width for each coupled shade is 120" and maximum overall width is 216". 4" R-series Fascia & Pocket will spliced in the center when width exceed 190".

Material Name	Roll Width	Railroad Option	Splice /Seam		Motorized Shade without Top Treament		Motorized Shade Deluxe Valance	Motorized Shade Fabric Valance	Motorized Shade with Medium Cassette	Motorized Shade with Large Cassette	Motorized Shade with 3" Fascia	Motorized Shade with 4" Fascia		Motorized Shade with Pocket Headrail	
					24v	110v	24v	24v	24v	24v	24v	24v	110v	24v	110v
3% Sheerweave 4600	126"	YES	YES	Non-Railroaded											
				Maximum Width	96"	98"	96"	96"	96"	96"	96"	96"	98"	96"	98"
					Maximum Height										
				For Shade Widths to 54"	120"	120"	120"	120"	84"	120"	114"	120"	120"	120"	120"
				For Shade Widths to 60"	120"	120"	120"	120"	84"	120"	114"	120"	120"	120"	120"
				For Shade Widths to 66"	120"	120"	120"	120"	84"	120"	114"	120"	120"	120"	120"
				For Shade Widths to 72"	120"	120"	120"	120"	84"	120"	114"	120"	120"	120"	120"
				For Shade Widths to 78"	120"	120"	120"	120"	84"	120"	114"	120"	120"	120"	120"
				For Shade Widths to 84"	120"	120"	120"	120"	84"	120"	114"	120"	120"	120"	120"
				For Shade Widths to 90"	96"	120"	96"	96"	84"	96"	96"	96"	120"	96"	120"
				For Shade Widths to 96"	78"	120"	78"	78"	78"	78"	78"	78"	120"	78"	120"
				For Shade Widths over 96"	NA	120"	NA	NA	NA	NA	NA	NA	120"	NA	120"
				Railroaded											
				Maximum Width	96"	120"	96"	96"	96"	96"	96"	96"	120"	96"	120"
					Maximum Height										
				For Shade Widths to 54"	120"	120"	120"	120"	84"	120"	114"	120"	120"	120"	120"
				For Shade Widths to 60"	120"	120"	120"	120"	84"	120"	114"	120"	120"	120"	120"
				For Shade Widths to 66"	120"	120"	120"	120"	84"	120"	114"	120"	120"	120"	120"
				For Shade Widths to 72"	120"	120"	120"	120"	84"	120"	114"	120"	120"	120"	120"
				For Shade Widths to 78"	120"	120"	120"	120"	84"	120"	114"	120"	120"	120"	120"
				For Shade Widths to 84"	120"	120"	120"	120"	84"	120"	114"	120"	120"	120"	120"
				For Shade Widths to 90"	96"	120"	96"	96"	84"	96"	96"	96"	120"	96"	120"
				For Shade Widths to 96"	78"	120"	78"	78"	78"	78"	78"	78"	120"	78"	120"
				For Shade Widths over 96"	NA	120"	NA	NA	NA	NA	NA	NA	120"	NA	114"
3% Sheerweave 4903	98"	NO	NO	Non-Railroaded											
				Maximum Width	96"	98"	88"	88"	96"	96"	96"	96"	98"	96"	98"
					Maximum Height										
				For Shade Widths to 54"	144"	144"	144"	144"	90"	144"	126"	144"	144"	144"	144"
				For Shade Widths to 60"	144"	144"	144"	144"	90"	144"	126"	144"	144"	144"	144"
				For Shade Widths to 66"	144"	144"	144"	144"	90"	144"	126"	144"	144"	144"	144"
				For Shade Widths to 72"	144"	144"	144"	144"	90"	144"	126"	144"	144"	144"	144"
				For Shade Widths to 78"	144"	144"	144"	144"	90"	144"	126"	144"	144"	144"	144"
				For Shade Widths to 84"	126"	144"	126"	126"	90"	126"	126"	126"	144"	126"	144"
				For Shade Widths to 88"	96"	144"	96"	96"	90"	96"	96"	96"	144"	96"	144"
				For Shade Widths to 90"	96"	144"	N/A	N/A	90"	96"	96"	96"	144"	96"	144"
				For Shade Widths to 96"	78"	144"	N/A	N/A	78"	78"	78"	78"	144"	78"	144"
				For Shade Widths over 96"	N/A	144"	N/A	N/A	N/A	N/A	N/A	N/A	144"	N/A	144"
3% Sheerweave 5000	98"	NO	NO	Non-Railroaded											
(R07_02, 04, 05, 07, 10)				Maximum Width	96"	96"	86"	86"	96"	96"	96"	96"	98"	96"	98"
					Maximum Height										
				For Shade Widths to 78"	144"	144"	72"	72"	42"	72"	60"	144"	126"	108"	78"
				For Shade Widths to 84"	126"	144"	72"	72"	42"	72"	60"	126"	126"	108"	78"
				For Shade Widths to 86"	96"	144"	72"	72"	42"	72"	60"	96"	126"	96"	78"
				For Shade Widths to 90"	96"	144"	NA	NA	42"	72"	60"	96"	126"	96"	78"
				For Shade Widths over 90"	78"	144"	NA	NA	42"	72"	60"	78"	126"	78"	78"
3% Sheerweave 5000	98"	NO	NO	Non-Railroaded											
(R07_R11, R89, R90, R93, U10, U11)				Maximum Width	96"	98"	88"	88"	96"	96"	96"	96"	98"	96"	98"
					Maximum Height										
				For Shade Widths to 54"	144"	144"	78"	78"	48"	78"	72"	144"	138"	114"	84"
				For Shade Widths to 60"	144"	144"	78"	78"	48"	78"	72"	144"	138"	114"	84"
				For Shade Widths to 66"	144"	144"	78"	78"	48"	78"	72"	144"	138"	114"	84"
				For Shade Widths to 72"	144"	144"	78"	78"	48"	78"	72"	144"	138"	114"	84"
				For Shade Widths to 78"	144"	144"	78"	78"	48"	78"	72"	144"	138"	114"	84"
				For Shade Widths to 84"	126"	144"	78"	78"	48"	78"	72"	126"	138"	114"	84"
				For Shade Widths to 88"	96"	144"	78"	78"	48"	78"	72"	96"	138"	96"	84"
				For Shade Widths to 90"	96"	144"	NA	NA	48"	78"	72"	96"	138"	96"	84"
				For Shade Widths over 90"	78"	144"	NA	NA	48"	78"	72"	78"	138"	78"	84"

PRODUCT SIZE SPECIFICATIONS – HARDWIRED MOTORIZATION

Minimum and Maximum Standards

Please Note: Shade sizes that are wider than the fabric roll width indicated will be made with the fabric turned width for length (railroaded). The maximum width for non-railroaded shades is the roll width unless otherwise noted.

Fabrics turned width for length will have a visible seam when fabricated longer than their maximum roll width less 10". Fabrics turned width for length may have an edge curl. This is not considered a defect in the product.

Motor Type	Motor Name	Min Width	Min Height	Weight Capacity
24v Low-Voltage	ST-30 Quiet	18-1/2"	12"	Lifts up to 23 lbs.
110v Hardwired	ST-50 Quiet	33"	12"	Lifts up to 52 lbs.
110v Hardwired	ST-50 Ultra Quiet	39"	12"	Lifts up to 52 lbs.

Note: 110v Motorized shades are available without top treatment, with 4" R-series Fascia, or with Pocket. Maximum width for each coupled shade is 120" and maximum overall width is 216". 4" R-series Fascia & Pocket will spliced in the center when width exceed 190".

Material Name	Roll Width	Railroad Option	Splice /Seam		Motorized Shade without Top Treament		Motorized Shade Deluxe Valance	Motorized Shade Fabric Valance	Motorized Shade with Medium Cassette	Motorized Shade with Large Cassette	Motorized Shade with 3" Fascia	Motorized Shade with 4" Fascia		Motorized Shade with Pocket Headrail	
					24v	110v	24v	24v	24v	24v	24v	24v	110v	24v	110v
3% T Screen	98"	YES	NO	Non-Railroaded											
				Maximum Width	98"	98"	88"	88"	98"	98"	98"	98"	98"	98"	98"
					Maximum Height										
				For Shade Widths to 84"	144"	144"	144"	144"	108"	144"	144"	144"	144"	144"	144"
				For Shade Widths to 88"	138"	144"	138"	138"	108"	138"	138"	138"	144"	138"	144"
				For Shade Widths to 90"	138"	144"	NA	NA	108"	138"	138"	138"	144"	138"	144"
				For Shade Widths to 96"	108"	144"	NA	NA	108"	108"	108"	108"	144"	108"	144"
				For Shade Widths over 96"	84"	144"	NA	NA	84"	84"	84"	84"	144"	84"	144"
				Railroaded											
				Maximum Width	108"	144"	108"	108"	108"	108"	108"	108"	144"	108"	144"
					Maximum Height										
				For Shade Widths to 96"	86"	82"	86"	86"	86"	86"	86"	86"	82"	86"	82"
				For Shade Widths over 96"	66"	82"	66"	66"	66"	66"	66"	66"	82"	66"	82"
4% S Screen	122"	NO	NO	Non-Railroaded											
				Maximum Width	102"	122"	102"	102"	102"	102"	102"	102"	122"	102"	122"
					Maximum Height										
				For Shade Widths to 72"	144"	144"	120"	120"	72"	120"	102"	144"	144"	144"	126"
				For Shade Widths to 84"	126"	144"	120"	120"	72"	120"	102"	126"	144"	126"	126"
				For Shade Widths to 90"	96"	144"	96"	96"	72"	96"	96"	96"	144"	96"	126"
				For Shade Widths to 96"	78"	144"	78"	78"	72"	78"	78"	78"	144"	78"	126"
				For Shade Widths over 96"	60"	144"	60"	60"	60"	60"	60"	60"	144"	60"	90"
4% Silver Screen	94"	YES	YES	Non-Railroaded											
				Maximum Width	94"	94"	84"	84"	94"	94"	94"	94"	94"	94"	94"
					Maximum Height										
				For Shade Widths to 84"	144"	144"	144"	144"	144"	144"	144"	144"	144"	144"	144"
				For Shade Widths to 90"	138"	144"	NA	NA	138"	138"	138"	138"	144"	138"	144"
				For Shade Widths to 94"	108"	144"	NA	NA	108"	108"	108"	108"	144"	108"	144"
				Railroaded											
				Maximum Width	102"	144"	102"	102"	102"	102"	102"	102"	144"	102"	144"
					Maximum Height										
				For Shade Widths to 84"	144"	144"	144"	144"	144"	144"	144"	144"	144"	144"	144"
				For Shade Widths to 90"	138"	144"	138"	138"	138"	138"	138"	138"	144"	138"	144"
				For Shade Widths to 96"	108"	144"	108"	108"	108"	108"	108"	108"	144"	108"	144"
				For Shade Widths to 102"	84"	144"	84"	84"	84"	84"	84"	84"	144"	84"	144"
				For Shade Widths over 102"	NA	144"	NA	NA	NA	NA	NA	NA	144"	NA	144"
5% E Screen	122"	YES	YES	Non-Railroaded											
				Maximum Width	102"	122"	102"	102"	102"	102"	102"	102"	122"	102"	122"
					Maximum Height										
				For Shade Widths to 84"	144"	144"	144"	144"	144"	144"	144"	144"	144"	144"	144"
				For Shade Widths to 90"	138"	144"	138"	138"	138"	138"	138"	138"	144"	138"	144"
				For Shade Widths to 96"	108"	144"	108"	108"	108"	108"	108"	108"	144"	108"	144"
				For Shade Widths to 102"	84"	144"	84"	84"	84"	84"	84"	84"	144"	84"	144"
				For Shade Widths over 102"	NA	144"	NA	NA	NA	NA	NA	NA	144"	NA	144"
				Railroaded											
				Maximum Width	102"	144"	102"	102"	102"	102"	102"	102"	144"	102"	144"
					Maximum Height										
				For Shade Widths to 84"	144"	144"	144"	144"	144"	144"	144"	144"	144"	144"	144"
				For Shade Widths to 90"	138"	144"	138"	138"	138"	138"	138"	138"	144"	138"	144"
				For Shade Widths to 96"	108"	144"	108"	108"	108"	108"	108"	108"	144"	108"	144"
				For Shade Widths to 102"	84"	144"	84"	84"	84"	84"	84"	84"	144"	84"	144"
				For Shade Widths over 102"	NA	144"	NA	NA	NA	NA	NA	NA	144"	NA	144"

PRODUCT SIZE SPECIFICATIONS – HARDWIRED MOTORIZATION

Minimum and Maximum Standards

Please Note: Shade sizes that are wider than the fabric roll width indicated will be made with the fabric turned width for length (railroaded). The maximum width for non-railroaded shades is the roll width unless otherwise noted.

Fabrics turned width for length will have a visible seam when fabricated longer than their maximum roll width less 10". Fabrics turned width for length may have an edge curl. This is not considered a defect in the product.

Motor Type	Motor Name	Min Width	Min Height	Weight Capacity
24v Low-Voltage	ST-30 Quiet	18-1/2"	12"	Lifts up to 23 lbs.
110v Hardwired	ST-50 Quiet	33"	12"	Lifts up to 52 lbs.
110v Hardwired	ST-50 Ultra Quiet	39"	12"	Lifts up to 52 lbs.

Note: 110v Motorized shades are available without top treatment, with 4" R-series Fascia, or with Pocket. Maximum width for each coupled shade is 120" and maximum overall width is 216". 4" R-series Fascia & Pocket will spliced in the center when width exceed 190".

Material Name	Roll Width	Railroad Option	Splice /Seam		Motorized Shade without Top Treament		Motorized Shade Deluxe Valance	Motorized Shade Fabric Valance	Motorized Shade with Medium Cassette	Motorized Shade with Large Cassette	Motorized Shade with 3" Fascia	Motorized Shade with 4" Fascia		Motorized Shade with Pocket Headrail	
					24v	110v	24v	24v	24v	24v	24v	24v	110v	24v	110v
5% M Screen Deco	98"	YES	YES	Non-Railroaded											
				Maximum Width	96"	96"	86"	86"	96"	96"	96"	96"	96"	96"	96"
					Maximum Height										
				For Shade Widths to 84"	144"	144"	144"	144"	126"	144"	144"	144"	144"	144"	144"
				For Shade Widths to 86"	138"	144"	138"	138"	126"	138"	138"	138"	144"	138"	144"
				For Shade Widths to 90"	138"	144"	NA	NA	126"	138"	138"	138"	144"	138"	144"
				For Shade Widths to 96"	108"	144"	NA	NA	108"	108"	108"	108"	144"	108"	144"
				Railroaded											
				Maximum Width	102"	144"	102"	102"	102"	102"	102"	102"	144"	102"	144"
					Maximum Height										
				For Shade Widths to 84"	144"	144"	144"	144"	126"	144"	144"	144"	144"	144"	144"
				For Shade Widths to 90"	138"	144"	138"	138"	126"	138"	138"	138"	144"	138"	144"
				For Shade Widths to 96"	108"	144"	108"	108"	108"	108"	108"	108"	144"	108"	144"
				For Shade Widths to 102"	84"	144"	84"	84"	84"	84"	84"	84"	144"	84"	144"
				For Shade Widths over 102"	NA	144"	NA	NA	NA	NA	NA	NA	144"	NA	126"
5% Sheerweave 2000	126"	YES	YES	Non-Railroaded											
				Maximum Width	96"	126"	96"	96"	96"	96"	96"	96"	126"	96"	126"
					Maximum Height										
				For Shade Widths to 54"	144"	144"	144"	144"	132"	144"	144"	144"	144"	144"	144"
				For Shade Widths to 60"	144"	144"	144"	144"	126"	144"	144"	144"	144"	144"	144"
				For Shade Widths to 66"	144"	144"	144"	144"	126"	144"	144"	144"	144"	144"	144"
				For Shade Widths to 72"	144"	144"	144"	144"	126"	144"	144"	144"	144"	144"	144"
				For Shade Widths to 78"	144"	144"	144"	144"	126"	144"	144"	144"	144"	144"	144"
				For Shade Widths to 84"	126"	144"	126"	126"	126"	126"	126"	126"	144"	126"	144"
				For Shade Widths to 90"	96"	144"	96"	96"	96"	96"	96"	96"	144"	96"	144"
				For Shade Widths to 96"	78"	144"	78"	78"	78"	78"	78"	78"	144"	78"	144"
				For Shade Widths over 96"	N/A	144"	N/A	N/A	N/A	N/A	N/A	N/A	144"	N/A	138"
				Railroaded											
				Maximum Width	96"	120"	96"	96"	96"	96"	96"	96"	120"	96"	120"
					Maximum Height										
				For Shade Widths to 54"	120"	120"	120"	120"	120"	120"	120"	120"	120"	120"	120"
				For Shade Widths to 60"	120"	120"	120"	120"	120"	120"	120"	120"	120"	120"	120"
				For Shade Widths to 66"	120"	120"	120"	120"	120"	120"	120"	120"	120"	120"	120"
				For Shade Widths to 72"	120"	120"	120"	120"	120"	120"	120"	120"	120"	120"	120"
				For Shade Widths to 78"	120"	120"	120"	120"	120"	120"	120"	120"	120"	120"	120"
				For Shade Widths to 84"	120"	120"	120"	120"	120"	120"	120"	120"	120"	120"	120"
				For Shade Widths to 90"	96"	120"	96"	96"	96"	96"	96"	96"	120"	96"	120"
				For Shade Widths to 96"	78"	120"	78"	78"	78"	78"	78"	78"	120"	78"	120"
				For Shade Widths over 96"	N/A	120"	N/A	N/A	N/A	N/A	N/A	N/A	120"	N/A	120"
5% Sheerweave 2390	126"	YES	YES	Non-Railroaded											
				Maximum Width	102"	126"	102"	102"	102"	102"	102"	102"	126"	102"	126"
					Maximum Height										
				For Shade Widths to 84"	144"	144"	144"	144"	144"	144"	144"	144"	144"	144"	144"
				For Shade Widths to 90"	138"	144"	138"	138"	138"	138"	138"	138"	144"	138"	144"
				For Shade Widths to 96"	108"	144"	108"	108"	108"	108"	108"	108"	144"	108"	144"
				For Shade Widths to 102"	84"	144"	84"	84"	84"	84"	84"	84"	144"	84"	144"
				For Shade Widths over 102"	NA	144"	NA	NA	NA	NA	NA	NA	144"	NA	144"
				Railroaded											
				Maximum Width	102"	144"	102"	102"	102"	102"	102"	102"	144"	102"	144"
					Maximum Height										
				For Shade Widths to 84"	144"	144"	144"	144"	144"	144"	144"	144"	144"	144"	144"
				For Shade Widths to 90"	138"	144"	138"	138"	138"	138"	138"	138"	144"	138"	144"
				For Shade Widths to 96"	108"	144"	108"	108"	108"	108"	108"	108"	144"	108"	144"
				For Shade Widths to 102"	84"	144"	84"	84"	84"	84"	84"	84"	144"	84"	144"
				For Shade Widths over 102"	NA	144"	NA	NA	NA	NA	NA	NA	144"	NA	144"

PRODUCT SIZE SPECIFICATIONS – HARDWIRED MOTORIZATION

Minimum and Maximum Standards

Please Note: Shade sizes that are wider than the fabric roll width indicated will be made with the fabric turned width for length (railroaded). The maximum width for non-railroaded shades is the roll width unless otherwise noted.

Fabrics turned width for length will have a visible seam when fabricated longer than their maximum roll width less 10". Fabrics turned width for length may have an edge curl. This is not considered a defect in the product.

Motor Type	Motor Name	Min Width	Min Height	Weight Capacity
24v Low-Voltage	ST-30 Quiet	18-1/2"	12"	Lifts up to 23 lbs.
110v Hardwired	ST-50 Quiet	33"	12"	Lifts up to 52 lbs.
110v Hardwired	ST-50 Ultra Quiet	39"	12"	Lifts up to 52 lbs.

Note: 110v Motorized shades are available without top treatment, with 4" R-series Fascia, or with Pocket. Maximum width for each coupled shade is 120" and maximum overall width is 216". 4" R-series Fascia & Pocket will spliced in the center when width exceed 190".

Material Name	Roll Width	Railroad Option	Splice /Seam		Motorized Shade without Top Treament		Motorized Shade Deluxe Valance	Motorized Shade Fabric Valance	Motorized Shade with Medium Cassette	Motorized Shade with Large Cassette	Motorized Shade with 3" Fascia	Motorized Shade with 4" Fascia		Motorized Shade with Pocket Headrail	
					24v	110v	24v	24v	24v	24v	24v	24v	110v	24v	110v
5% Sheerweave 2705	126"	NO	NO	Non-Railroaded											
				Maximum Width	98"	98"	98"	N/A	98"	98"	98"	98"	98"	98"	98"
					Maximum Height										
				For Shade Widths to 66"	120"	120"	120"	N/A	102"	120"	120"	120"	120"	120"	120"
				For Shade Widths to 72"	120"	120"	120"	N/A	102"	120"	120"	120"	120"	120"	120"
				For Shade Widths to 78"	120"	120"	120"	N/A	102"	120"	120"	120"	120"	120"	120"
				For Shade Widths to 84"	120"	120"	120"	N/A	102"	120"	120"	120"	120"	120"	120"
				For Shade Widths to 90"	120"	120"	120"	N/A	102"	120"	120"	120"	120"	120"	120"
				For Shade Widths to 96"	108"	120"	108"	N/A	102"	108"	108"	108"	120"	108"	120"
				For Shade Widths over 96"	84"	120"	84"	N/A	84"	84"	84"	84"	120"	84"	120"
5% Sheerweave 4000	126"	YES	YES	Non-Railroaded											
				Maximum Width	102"	126"	102"	102"	102"	102"	102"	102"	126"	102"	126"
					Maximum Height										
				For Shade Widths to 78"	144"	144"	138"	138"	90"	138"	120"	144"	144"	144"	144"
				For Shade Widths to 84"	126"	144"	126"	126"	90"	126"	120"	126"	144"	126"	144"
				For Shade Widths to 90"	96"	144"	96"	96"	90"	96"	96"	96"	144"	96"	144"
				For Shade Widths to 96"	78"	144"	78"	78"	78"	78"	78"	78"	144"	78"	144"
				For Shade Widths over 96"	60"	144"	60"	60"	60"	60"	60"	60"	144"	60"	90"
				Railroaded											
				Maximum Width	102"	144"	102"	102"	102"	102"	102"	102"	144"	102"	144"
					Maximum Height										
				For Shade Widths to 78"	144"	144"	138"	138"	90"	138"	120"	144"	144"	144"	144"
				For Shade Widths to 84"	126"	144"	126"	126"	90"	126"	120"	126"	144"	126"	144"
				For Shade Widths to 90"	96"	144"	96"	96"	90"	96"	96"	96"	144"	96"	144"
				For Shade Widths to 96"	78"	144"	78"	78"	78"	78"	78"	78"	144"	78"	144"
				For Shade Widths over 96"	60"	144"	60"	60"	60"	60"	60"	60"	144"	60"	90"
5% Sheerweave 4500	126"	YES	YES	Non-Railroaded											
				Maximum Width	96"	126"	96"	96"	96"	96"	96"	96"	126"	96"	126"
					Maximum Height										
				For Shade Widths to 54"	144"	144"	144"	144"	108"	144"	144"	144"	144"	144"	144"
				For Shade Widths to 60"	144"	144"	144"	144"	108"	144"	144"	144"	144"	144"	144"
				For Shade Widths to 66"	144"	144"	144"	144"	108"	144"	144"	144"	144"	144"	144"
				For Shade Widths to 72"	144"	144"	144"	144"	108"	144"	144"	144"	144"	144"	144"
				For Shade Widths to 78"	144"	144"	144"	144"	108"	144"	144"	144"	144"	144"	144"
				For Shade Widths to 84"	126"	144"	126"	126"	108"	126"	126"	126"	144"	126"	144"
				For Shade Widths to 90"	96"	144"	96"	96"	96"	96"	96"	96"	144"	96"	144"
				For Shade Widths to 96"	78"	144"	78"	78"	72"	78"	78"	78"	144"	78"	144"
				For Shade Widths over 96"	NA	144"	NA	NA	NA	NA	NA	NA	144"	NA	108"
				Railroaded											
				Maximum Width	96"	120"	96"	96"	96"	96"	96"	96"	120"	96"	120"
					Maximum Height										
				For Shade Widths to 54"	144"	144"	144"	144"	108"	144"	144"	144"	144"	144"	144"
				For Shade Widths to 60"	144"	144"	144"	144"	108"	144"	144"	144"	144"	144"	144"
				For Shade Widths to 66"	144"	144"	144"	144"	108"	144"	144"	144"	144"	144"	144"
				For Shade Widths to 72"	144"	144"	144"	144"	108"	144"	144"	144"	144"	144"	144"
				For Shade Widths to 78"	144"	144"	144"	144"	108"	144"	144"	144"	144"	144"	144"
				For Shade Widths to 84"	126"	144"	126"	126"	108"	126"	126"	126"	144"	126"	144"
				For Shade Widths to 90"	96"	144"	96"	96"	96"	96"	96"	96"	144"	96"	144"
				For Shade Widths to 96"	78"	144"	78"	78"	72"	78"	78"	78"	144"	78"	144"
				For Shade Widths over 96"	NA	144"	NA	NA	NA	NA	NA	NA	144"	NA	108"

PRODUCT SIZE SPECIFICATIONS – HARDWIRED MOTORIZATION

Minimum and Maximum Standards

Please Note: Shade sizes that are wider than the fabric roll width indicated will be made with the fabric turned width for length (railroaded). The maximum width for non-railroaded shades is the roll width unless otherwise noted.

Fabrics turned width for length will have a visible seam when fabricated longer than their maximum roll width less 10". Fabrics turned width for length may have an edge curl. This is not considered a defect in the product.

Motor Type	Motor Name	Min Width	Min Height	Weight Capacity
24v Low-Voltage	ST-30 Quiet	18-1/2"	12"	Lifts up to 23 lbs.
110v Hardwired	ST-50 Quiet	33"	12"	Lifts up to 52 lbs.
110v Hardwired	ST-50 Ultra Quiet	39"	12"	Lifts up to 52 lbs.

Note: 110v Motorized shades are available without top treatment, with 4" R-series Fascia, or with Pocket. Maximum width for each coupled shade is 120" and maximum overall width is 216". 4" R-series Fascia & Pocket will spliced in the center when width exceed 190".

Material Name	Roll Width	Railroad Option	Splice /Seam		Motorized Shade without Top Treament		Motorized Shade Deluxe Valance	Motorized Shade Fabric Valance	Motorized Shade with Medium Cassette	Motorized Shade with Large Cassette	Motorized Shade with 3" Fascia	Motorized Shade with 4" Fascia		Motorized Shade with Pocket Headrail	
					24v	110v	24v	24v	24v	24v	24v	24v	110v	24v	110v
5% Sheerweave 5000 *(R10_01, 03, 06, 07, 09, 10, 11, 12, 13,14, 15, 16, 17, 18, 19, 20, 21)*	98"	NO	NO	**Non-Railroaded**											
				Maximum Width	98"	98"	88"	88"	98"	98"	98"	98"	98"	98"	98"
					Maximum Height										
				For Shade Widths to 72"	144"	144"	90"	90"	54"	90"	78"	144"	144"	126"	96"
				For Shade Widths to 84"	126"	144"	90"	90"	54"	90"	78"	126"	144"	126"	96"
				For Shade Widths to 88"	96"	144"	90"	90"	54"	90"	78"	96"	144"	96"	96"
				For Shade Widths to 90"	96"	144"	NA	NA	54"	90"	78"	96"	144"	96"	96"
				For Shade Widths over 90"	60"	144"	NA	NA	54"	60"	60"	60"	144"	60"	96"
5% Sheerweave 5000 *(R10_Q51, S77, S84)*	98"	NO	NO	**Non-Railroaded**											
				Maximum Width	96"	98"	88"	88"	96"	96"	96"	96"	98"	96"	98"
					Maximum Height										
				For Shade Widths to 54"	144"	144"	90"	90"	54"	90"	78"	144"	144"	126"	96"
				For Shade Widths to 60"	144"	144"	90"	90"	54"	90"	78"	144"	144"	126"	96"
				For Shade Widths to 66"	144"	144"	90"	90"	54"	90"	78"	144"	144"	126"	96"
				For Shade Widths to 72"	144"	144"	90"	90"	54"	90"	78"	144"	144"	126"	96"
				For Shade Widths to 78"	144"	144"	90"	90"	54"	90"	78"	144"	144"	126"	96"
				For Shade Widths to 84"	126"	144"	90"	90"	54"	90"	78"	126"	144"	126"	96"
				For Shade Widths to 88"	96"	144"	90"	90"	54"	90"	78"	96"	144"	96"	96"
				For Shade Widths to 90"	96"	144"	NA	NA	54"	90"	78"	96"	144"	96"	96"
				For Shade Widths over 90"	78"	144"	NA	NA	54"	78"	78"	78"	144"	78"	96"
5% Sheerweave 5000 *(R10_Q43, S82)*	98"	NO	NO	**Non-Railroaded**											
				Maximum Width	96"	98"	88"	88"	96"	96"	96"	96"	98"	96"	98"
					Maximum Height										
				For Shade Widths to 54"	144"	144"	102"	102"	66"	102"	90"	144"	144"	144"	114"
				For Shade Widths to 60"	144"	144"	102"	102"	66"	102"	90"	144"	144"	144"	114"
				For Shade Widths to 66"	144"	144"	102"	102"	66"	102"	90"	144"	144"	144"	114"
				For Shade Widths to 72"	144"	144"	102"	102"	66"	102"	90"	144"	144"	144"	114"
				For Shade Widths to 78"	144"	144"	102"	102"	66"	102"	90"	144"	144"	144"	114"
				For Shade Widths to 84"	126"	144"	102"	102"	66"	102"	90"	126"	144"	126"	114"
				For Shade Widths to 88"	96"	144"	96"	96"	66"	96"	90"	96"	144"	96"	114"
				For Shade Widths to 90"	96"	144"	NA	NA	66"	96"	90"	96"	144"	96"	114"
				For Shade Widths over 90"	78"	144"	NA	NA	66"	78"	78"	78"	144"	78"	114"
7% Global Screen	118"	YES	YES	**Non-Railroaded**											
				Maximum Width	108"	118"	108"	108"	108"	108"	108"	108"	118"	108"	118"
					Maximum Height										
				For Shade Widths to 84"	144"	144"	144"	144"	126"	144"	144"	144"	144"	144"	144"
				For Shade Widths to 90"	138"	144"	138"	138"	126"	138"	138"	138"	144"	138"	144"
				For Shade Widths to 96"	108"	144"	108"	108"	108"	108"	108"	108"	144"	108"	144"
				For Shade Widths to 102"	84"	144"	84"	84"	84"	84"	84"	84"	144"	84"	144"
				For Shade Widths to 108"	66"	144"	66"	66"	66"	66"	66"	66"	144"	66"	144"
				For Shade Widths over 108"	NA	120"	NA	NA	NA	NA	NA	NA	144"	NA	144"
				Railroaded											
				Maximum Width	108"	120"	108"	108"	108"	108"	108"	108"	120"	108"	120"
					Maximum Height										
				For Shade Widths to 84"	144"	144"	144"	144"	126"	144"	144"	144"	144"	144"	144"
				For Shade Widths to 90"	138"	144"	138"	138"	126"	138"	138"	138"	144"	138"	144"
				For Shade Widths to 96"	108"	144"	108"	108"	108"	108"	108"	108"	144"	108"	144"
				For Shade Widths to 102"	84"	144"	84"	84"	84"	84"	84"	84"	144"	84"	144"
				For Shade Widths to 108"	66"	144"	66"	66"	66"	66"	66"	66"	144"	66"	144"
				For Shade Widths over 108"	NA	120"	NA	NA	NA	NA	NA	NA	144"	NA	144"

PRODUCT SIZE SPECIFICATIONS – HARDWIRED MOTORIZATION

Minimum and Maximum Standards

Please Note: Shade sizes that are wider than the fabric roll width indicated will be made with the fabric turned width for length (railroaded). The maximum width for non-railroaded shades is the roll width unless otherwise noted.

Fabrics turned width for length will have a visible seam when fabricated longer than their maximum roll width less 10". Fabrics turned width for length may have an edge curl. This is not considered a defect in the product.

Motor Type	Motor Name	Min Width	Min Height	Weight Capacity
24v Low-Voltage	ST-30 Quiet	18-1/2"	12"	Lifts up to 23 lbs.
110v Hardwired	ST-50 Quiet	33"	12"	Lifts up to 52 lbs.
110v Hardwired	ST-50 Ultra Quiet	39"	12"	Lifts up to 52 lbs.

Note: 110v Motorized shades are available without top treatment, with 4" R-series Fascia, or with Pocket. Maximum width for each coupled shade is 120" and maximum overall width is 216". 4" R-series Fascia & Pocket will spliced in the center when width exceed 190".

Material Name	Roll Width	Railroad Option	Splice /Seam		Motorized Shade without Top Treament		Motorized Shade Deluxe Valance	Motorized Shade Fabric Valance	Motorized Shade with Medium Cassette	Motorized Shade with Large Cassette	Motorized Shade with 3" Fascia	Motorized Shade with 4" Fascia		Motorized Shade with Pocket Headrail	
					24v	110v	24v	24v	24v	24v	24v	24v	110v	24v	110v
7% Sheerweave 5000	98"	NO	NO	Non-Railroaded											
(R34_Q46)				Maximum Width	98"	98"	88"	88"	98"	98"	98"	98"	98"	98"	98"
					Maximum Height										
				For Shade Widths to 72"	144"	144"	102"	102"	66"	102"	90"	144"	144"	144"	108"
				For Shade Widths to 84"	126"	144"	102"	102"	66"	102"	90"	126"	144"	126"	108"
				For Shade Widths to 88"	96"	144"	96"	96"	66"	96"	90"	96"	144"	96"	108"
				For Shade Widths to 90"	96"	144"	NA	NA	66"	96"	90"	96"	144"	96"	108"
				For Shade Widths over 90"	60"	144"	NA	NA	60"	60"	60"	60"	144"	60"	108"
7% Sheerweave 5000	98"	NO	NO	Non-Railroaded											
(R34_08, 09)				Maximum Width	98"	98"	88"	88"	98"	98"	98"	98"	98"	98"	98"
					Maximum Height										
				For Shade Widths to 72"	144"	144"	144"	144"	78"	126"	108"	144"	144"	144"	132"
				For Shade Widths to 84"	126"	144"	144"	144"	78"	126"	108"	126"	144"	126"	132"
				For Shade Widths to 88"	96"	144"	138"	138"	78"	96"	96"	96"	144"	96"	132"
				For Shade Widths to 90"	96"	144"	NA	NA	78"	96"	96"	96"	144"	96"	132"
				For Shade Widths to 96"	78"	144"	NA	NA	78"	78"	78"	78"	144"	78"	132"
				For Shade Widths over 96"	60"	144"	NA	NA	60"	60"	60"	60"	144"	60"	132"
7% Sheerweave 5000	98"	NO	NO	Non-Railroaded											
(R34_S73)				Maximum Width	96"	98"	88"	88"	96"	96"	96"	96"	98"	96"	98"
					Maximum Height										
				For Shade Widths to 54"	144"	144"	96"	96"	60"	96"	84"	144"	144"	138"	102"
				For Shade Widths to 60"	144"	144"	96"	96"	60"	96"	84"	144"	144"	138"	102"
				For Shade Widths to 66"	144"	144"	96"	96"	60"	96"	84"	144"	144"	138"	102"
				For Shade Widths to 72"	144"	144"	96"	96"	60"	96"	84"	144"	144"	138"	102"
				For Shade Widths to 78"	144"	144"	96"	96"	60"	96"	84"	144"	144"	138"	102"
				For Shade Widths to 84"	126"	144"	96"	96"	60"	96"	84"	126"	144"	126"	102"
				For Shade Widths to 88"	96"	144"	96"	96"	60"	96"	84"	96"	144"	96"	102"
				For Shade Widths to 90"	96"	144"	NA	NA	60"	96"	84"	96"	144"	96"	102"
				For Shade Widths over 90"	78"	144"	NA	NA	60"	78"	78"	78"	144"	78"	102"
10% E Screen	122"	YES	YES	Non-Railroaded											
				Maximum Width	108"	120"	108"	108"	108"	108"	108"	108"	120"	108"	120"
					Maximum Height										
				For Shade Widths to 84"	144"	144"	144"	144"	138"	144"	144"	144"	144"	144"	144"
				For Shade Widths to 90"	138"	144"	138"	138"	138"	138"	138"	138"	144"	138"	144"
				For Shade Widths to 96"	108"	144"	108"	108"	108"	108"	108"	108"	144"	108"	144"
				For Shade Widths to 102"	84"	144"	84"	84"	84"	84"	84"	84"	144"	84"	144"
				For Shade Widths over 102"	66"	144"	66"	66"	66"	66"	66"	66"	144"	66"	144"
				Railroaded											
				Maximum Width	108"	144"	108"	108"	108"	108"	108"	108"	144"	108"	144"
					Maximum Height										
				For Shade Widths to 84"	144"	144"	144"	144"	138"	144"	144"	144"	144"	144"	144"
				For Shade Widths to 90"	138"	144"	138"	138"	138"	138"	138"	138"	144"	138"	144"
				For Shade Widths to 96"	108"	144"	108"	108"	108"	108"	108"	108"	144"	108"	144"
				For Shade Widths to 102"	84"	144"	84"	84"	84"	84"	84"	84"	144"	84"	144"
				For Shade Widths over 102"	66"	144"	66"	66"	66"	66"	66"	66"	144"	66"	144"
10% Sheerweave 2360	126"	NO	NO	Non-Railroaded											
				Maximum Width	102"	126"	102"	102"	102"	102"	102"	102"	126"	102"	126"
					Maximum Height										
				For Shade Widths to 66"	144"	144"	144"	144"	138"	144"	144"	144"	144"	144"	144"
				For Shade Widths to 72"	144"	144"	144"	144"	138"	144"	144"	144"	144"	144"	144"
				For Shade Widths to 78"	144"	144"	144"	144"	138"	144"	144"	144"	144"	144"	144"
				For Shade Widths to 84"	144"	144"	144"	144"	138"	144"	144"	144"	144"	144"	144"
				For Shade Widths to 90"	138"	144"	138"	138"	138"	138"	138"	138"	144"	138"	144"
				For Shade Widths to 96"	108"	144"	108"	108"	102"	108"	108"	108"	144"	108"	144"
				For Shade Widths to 102"	84"	144"	84"	84"	84"	84"	84"	84"	144"	84"	144"
				For Shade Widths over 102"	NA	144"	NA	NA	NA	NA	NA	NA	144"	NA	144"

PRODUCT SIZE SPECIFICATIONS – HARDWIRED MOTORIZATION

Minimum and Maximum Standards

Please Note: Shade sizes that are wider than the fabric roll width indicated will be made with the fabric turned width for length (railroaded). The maximum width for non-railroaded shades is the roll width unless otherwise noted.

Fabrics turned width for length will have a visible seam when fabricated longer than their maximum roll width less 10". Fabrics turned width for length may have an edge curl. This is not considered a defect in the product.

Motor Type	Motor Name	Min Width	Min Height	Weight Capacity
24v Low-Voltage	ST-30 Quiet	18-1/2"	12"	Lifts up to 23 lbs.
110v Hardwired	ST-50 Quiet	33"	12"	Lifts up to 52 lbs.
110v Hardwired	ST-50 Ultra Quiet	39"	12"	Lifts up to 52 lbs.

Note: 110v Motorized shades are available without top treatment, with 4" R-series Fascia, or with Pocket. Maximum width for each coupled shade is 120" and maximum overall width is 216". 4" R-series Fascia & Pocket will spliced in the center when width exceed 190".

Material Name	Roll Width	Railroad Option	Splice /Seam		Motorized Shade without Top Treament		Motorized Shade Deluxe Valance	Motorized Shade Fabric Valance	Motorized Shade with Medium Cassette	Motorized Shade with Large Cassette	Motorized Shade with 3" Fascia	Motorized Shade with 4" Fascia		Motorized Shade with Pocket Headrail	
					24v	110v	24v	24v	24v	24v	24v	24v	110v	24v	110v
10% Sheerweave 4100	98"	YES	YES	Non-Railroaded											
				Maximum Width	96"	98"	88"	88"	96"	96"	96"	96"	98"	96"	98"
					Maximum Height										
				For Shade Widths to 54"	144"	144"	120"	120"	78"	120"	108"	144"	144"	144"	144"
				For Shade Widths to 60"	144"	144"	120"	120"	78"	120"	108"	144"	144"	144"	144"
				For Shade Widths to 66"	144"	144"	120"	120"	78"	120"	108"	144"	144"	144"	144"
				For Shade Widths to 72"	144"	144"	120"	120"	78"	120"	108"	144"	144"	144"	144"
				For Shade Widths to 78"	144"	144"	120"	120"	78"	120"	108"	144"	144"	144"	144"
				For Shade Widths to 84"	126"	144"	120"	120"	78"	120"	108"	126"	144"	126"	144"
				For Shade Widths to 88"	96"	144"	96"	96"	78"	96"	96"	96"	144"	96"	144"
				For Shade Widths to 90"	96"	144"	N/A	N/A	78"	96"	96"	96"	144"	96"	144"
				For Shade Widths to 96"	78"	144"	N/A	N/A	78"	78"	78"	78"	144"	78"	144"
				For Shade Widths to 98"	NA	144"	NA	NA	NA	NA	NA	NA	144"	NA	144"
				Railroaded											
				Maximum Width	96"	120"	96"	96"	96"	96"	96"	96"	120"	96"	120"
					Maximum Height										
				For Shade Widths to 54"	120"	120"	120"	120"	78"	120"	108"	120"	120"	120"	120"
				For Shade Widths to 60"	120"	120"	120"	120"	78"	120"	108"	120"	120"	120"	120"
				For Shade Widths to 66"	120"	120"	120"	120"	78"	120"	108"	120"	120"	120"	120"
				For Shade Widths to 72"	120"	120"	120"	120"	78"	120"	108"	120"	120"	120"	120"
				For Shade Widths to 78"	120"	120"	120"	120"	78"	120"	108"	120"	120"	120"	120"
				For Shade Widths to 84"	120"	120"	120"	120"	78"	120"	108"	120"	120"	120"	120"
				For Shade Widths to 90"	96"	120"	96"	96"	78"	96"	96"	96"	120"	96"	120"
				For Shade Widths to 96"	78"	120"	78"	78"	78"	78"	78"	78"	120"	78"	120"
				For Shade Widths over 96"	NA	120"	N/A	N/A	N/A	N/A	N/A	NA	120"	NA	114"
10% Sheerweave 5000 *(R26_03)*	98"	NO	NO	Non-Railroaded											
				Maximum Width	98"	98"	88"	88"	98"	98"	98"	98"	98"	98"	98"
					Maximum Height										
				For Shade Widths to 72"	144"	144"	90"	90"	54"	90"	78"	144"	144"	126"	96"
				For Shade Widths to 84"	126"	144"	90"	90"	54"	90"	78"	126"	144"	126"	96"
				For Shade Widths to 88"	96"	144"	90"	90"	54"	90"	78"	96"	144"	96"	96"
				For Shade Widths to 90"	96"	144"	NA	NA	54"	90"	78"	96"	144"	96"	96"
				For Shade Widths over 90"	60"	144"	NA	NA	54"	60"	60"	60"	144"	60"	96"
10% Sheerweave 5000 *(R26_U16, U24, U28, U29)*	98"	NO	NO	Non-Railroaded											
				Maximum Width	96"	98"	88"	88"	96"	96"	96"	96"	98"	96"	98"
					Maximum Height										
				For Shade Widths to 54"	144"	144"	96"	96"	60"	96"	90"	144"	144"	144"	108"
				For Shade Widths to 60"	144"	144"	96"	96"	60"	96"	90"	144"	144"	144"	108"
				For Shade Widths to 66"	144"	144"	96"	96"	60"	96"	90"	144"	144"	144"	108"
				For Shade Widths to 72"	144"	144"	96"	96"	60"	96"	90"	144"	144"	144"	108"
				For Shade Widths to 78"	144"	144"	96"	96"	60"	96"	90"	144"	144"	144"	108"
				For Shade Widths to 84"	126"	144"	96"	96"	60"	96"	90"	126"	144"	126"	108"
				For Shade Widths to 88"	96"	144"	96"	96"	60"	96"	90"	96"	144"	96"	108"
				For Shade Widths to 90"	96"	144"	NA	NA	60"	96"	90"	96"	144"	96"	108"
				For Shade Widths over 90"	78"	144"	NA	NA	60"	78"	78"	78"	144"	78"	108"

PRODUCT SIZE SPECIFICATIONS – HARDWIRED MOTORIZATION

Minimum and Maximum Standards

Please Note: Shade sizes that are wider than the fabric roll width indicated will be made with the fabric turned width for length (railroaded). The maximum width for non-railroaded shades is the roll width unless otherwise noted.

Fabrics turned width for length will have a visible seam when fabricated longer than their maximum roll width less 10". Fabrics turned width for length may have an edge curl. This is not considered a defect in the product.

Motor Type	Motor Name	Min Width	Min Height	Weight Capacity
24v Low-Voltage	ST-30 Quiet	18-1/2"	12"	Lifts up to 23 lbs.
110v Hardwired	ST-50 Quiet	33"	12"	Lifts up to 52 lbs.
110v Hardwired	ST-50 Ultra Quiet	39"	12"	Lifts up to 52 lbs.

Note: 110v Motorized shades are available without top treatment, with 4" R-series Fascia, or with Pocket. Maximum width for each coupled shade is 120" and maximum overall width is 216". 4" R-series Fascia & Pocket will spliced in the center when width exceed 190".

Material Name	Roll Width	Railroad Option	Splice /Seam		Motorized Shade without Top Treament		Motorized Shade Deluxe Valance	Motorized Shade Fabric Valance	Motorized Shade with Medium Cassette	Motorized Shade with Large Cassette	Motorized Shade with 3" Fascia	Motorized Shade with 4" Fascia		Motorized Shade with Pocket Headrail	
					24v	110v	24v	24v	24v	24v	24v	24v	110v	24v	110v
Alexandria	78"	NO	NO	Non-Railroaded											
				Maximum Width	78"	78"	68"	68"	78"	78"	78"	78"	78"	78"	78"
					Maximum Height										
				For Shade Widths to 68"	144"	144"	144"	144"	144"	144"	144"	144"	144"	144"	144"
				For Shade Widths to 78"	144"	144"	NA	NA	144"	144"	144"	144"	144"	144"	144"
Astaire	94"	NO	NO	Non-Railroaded											
				Maximum Width	94"	94"	NA	NA	94"	94"	94"	94"	94"	94"	94"
					Maximum Height										
				For Shade Widths to 94"	144"	144"	NA	NA	78"	120"	108"	144"	144"	144"	130"
Avila R Blackout	118"	YES	YES	Non-Railroaded											
				Maximum Width	108"	118"	108"	108"	108"	108"	108"	108"	118"	108"	118"
					Maximum Height										
				For Shade Widths to 84"	144"	144"	144"	144"	144"	144"	144"	144"	144"	144"	144"
				For Shade Widths to 90"	138"	144"	138"	138"	138"	138"	138"	138"	144"	138"	144"
				For Shade Widths to 96"	108"	144"	108"	108"	108"	108"	108"	108"	144"	108"	144"
				For Shade Widths over 96"	66"	144"	66"	66"	66"	66"	66"	66"	144"	66"	144"
				Railroaded											
				Maximum Width	108"	120"	108"	108"	108"	108"	108"	108"	120"	108"	120"
					Maximum Height										
				For Shade Widths to 90"	120"	120"	120"	120"	120"	120"	120"	120"	120"	120"	120"
				For Shade Widths to 96"	108"	120"	108"	108"	108"	108"	108"	108"	120"	108"	120"
				For Shade Widths over 96"	66"	120"	66"	66"	66"	66"	66"	66"	120"	66"	120"
Baroque	78"	NO	NO	Non-Railroaded											
				Maximum Width	78"	78"	68"	68"	78"	78"	78"	78"	78"	78"	78"
					Maximum Height										
				For Shade Widths to 68"	144"	144"	144"	144"	144"	144"	144"	144"	144"	144"	144"
				For Shade Widths to 78"	144"	144"	NA	NA	144"	144"	144"	144"	144"	144"	144"
Blackout - Solid	72"	YES	YES	Non-Railroaded											
				Maximum Width	72"	72"	62"	62"	72"	72"	72"	72"	72"	72"	72"
					Maximum Height										
				For Shade Widths to 62"	144"	144"	144"	NA	144"	144"	144"	144"	144"	144"	144"
				For Shade Widths to 72"	144"	144"	NA	NA	144"	144"	144"	144"	144"	144"	144"
					*Fabric and Deluxe valance - max shade size is 62" x 144"										
				Railroaded											
				Maximum Width	102"	144"	102"	102"	102"	102"	102"	102"	144"	102"	144"
					Maximum Height										
				For Shade Widths to 90"	130"	130"	130"	NA	130"	130"	130"	130"	130"	130"	130"
				For Shade Widths to 96"	108"	130"	108"	NA	108"	108"	108"	108"	130"	108"	130"
				For Shade Widths to 102"	84"	130"	84"	NA	84"	84"	84"	84"	130"	84"	130"
				For Shade Widths over 102"	NA	130"	NA	NA	NA	NA	NA	NA	130"	NA	130"
Brilliance	118"	NO	NO	Non-Railroaded											
				Maximum Width	118"	118"	108"	108"	118"	118"	118"	118"	118"	118"	118"
					Maximum Height										
				For Shade Widths to 96"	144"	144"	144"	144"	144"	144"	144"	144"	144"	144"	144"
				For Shade Widths over 96"	60"	144"	60"	60"	60"	60"	60"	60"	144"	60"	144"
Brilliance Blackout	118"	NO	NO	Non-Railroaded											
				Maximum Width	108"	118"	108"	108"	108"	108"	108"	108"	118"	108"	118"
					Maximum Height										
				For Shade Widths to 84"	144"	144"	144"	144"	114"	144"	144"	144"	144"	144"	144"
				For Shade Widths to 90"	138"	144"	138"	138"	114"	138"	138"	138"	144"	138"	144"
				For Shade Widths to 96"	108"	144"	108"	108"	108"	108"	108"	108"	144"	108"	144"
				For Shade Widths over 96"	66"	144"	66"	66"	66"	66"	66"	66"	144"	66"	144"

PRODUCT SIZE SPECIFICATIONS – HARDWIRED MOTORIZATION

Minimum and Maximum Standards

Please Note: Shade sizes that are wider than the fabric roll width indicated will be made with the fabric turned width for length (railroaded). The maximum width for non-railroaded shades is the roll width unless otherwise noted.

Fabrics turned width for length will have a visible seam when fabricated longer than their maximum roll width less 10". Fabrics turned width for length may have an edge curl. This is not considered a defect in the product.

Motor Type	Motor Name	Min Width	Min Height	Weight Capacity
24v Low-Voltage	ST-30 Quiet	18-1/2"	12"	Lifts up to 23 lbs.
110v Hardwired	ST-50 Quiet	33"	12"	Lifts up to 52 lbs.
110v Hardwired	ST-50 Ultra Quiet	39"	12"	Lifts up to 52 lbs.

Note: 110v Motorized shades are available without top treatment, with 4" R-series Fascia, or with Pocket. Maximum width for each coupled shade is 120" and maximum overall width is 216". 4" R-series Fascia & Pocket will spliced in the center when width exceed 190".

Material Name	Roll Width	Railroad Option	Splice /Seam		Motorized Shade without Top Treament		Motorized Shade Deluxe Valance	Motorized Shade Fabric Valance	Motorized Shade with Medium Cassette	Motorized Shade with Large Cassette	Motorized Shade with 3" Fascia	Motorized Shade with 4" Fascia		Motorized Shade with Pocket Headrail	
					24v	110v	24v	24v	24v	24v	24v	24v	110v	24v	110v
Carrara	110"	NO	NO	Non-Railroaded											
				Maximum Width	110"	110"	100"	100"	110"	110"	110"	110"	110"	110"	110"
					Maximum Height										
				For Shade Widths to 66"	144"	144"	144"	144"	144"	144"	144"	144"	144"	144"	144"
				For Shade Widths to 78"	144"	144"	144"	144"	144"	144"	144"	144"	144"	144"	144"
				For Shade Widths to 90"	138"	144"	138"	138"	138"	138"	138"	138"	144"	138"	144"
				For Shade Widths to 100"	84"	144"	84"	84"	84"	84"	84"	84"	144"	84"	144"
				For Shade Widths to 102"	84"	144"	NA	NA	84"	84"	84"	84"	144"	84"	144"
				For Shade Widths to 108"	66"	144"	NA	NA	66"	66"	66"	66"	144"	66"	144"
				For Shade Widths to 110"	48"	144"	NA	NA	48"	48"	48"	48"	144"	48"	144"
Carrara Blackout	110"	NO	NO	Non-Railroaded											
				Maximum Width	102"	110"	100"	100"	102"	102"	102"	102"	110"	102"	110"
					Maximum Height										
				For Shade Widths to 72"	144"	144"	144"	144"	96"	144"	132"	144"	144"	144"	144"
				For Shade Widths to 84"	126"	144"	126"	126"	96"	126"	126"	126"	144"	126"	144"
				For Shade Widths to 90"	96"	144"	96"	96"	96"	96"	96"	96"	144"	96"	144"
				For Shade Widths to 96"	78"	144"	78"	78"	78"	78"	78"	78"	144"	78"	144"
				For Shade Widths over 96"	60"	144"	60"	60"	60"	60"	60"	60"	144"	60"	138"
Claudio	110"	NO	NO	Non-Railroaded											
				Maximum Width	110"	110"	100"	100"	110"	110"	110"	110"	110"	110"	110"
					Maximum Height										
				For Shade Widths to 96"	144"	144"	144"	144"	144"	144"	144"	144"	144"	144"	144"
				For Shade Widths over 96"	84"	144"	144"	144"	84"	84"	84"	84"	144"	84"	144"
Claudio Blackout	110"	NO	NO	Non-Railroaded											
				Maximum Width	108"	110"	100"	100"	108"	108"	108"	108"	110"	108"	110"
					Maximum Height										
				For Shade Widths to 84"	144"	144"	144"	144"	114"	144"	144"	144"	144"	144"	144"
				For Shade Widths to 90"	138"	144"	138"	138"	114"	138"	138"	138"	144"	138"	144"
				For Shade Widths to 96"	108"	144"	108"	108"	108"	108"	108"	108"	144"	108"	144"
				For Shade Widths over 96"	66"	144"	66"	66"	66"	66"	66"	66"	144"	66"	144"
Cusco	110"	YES	YES	Non-Railroaded											
				Maximum Width	102"	110"	100"	100"	102"	102"	102"	102"	110"	102"	110"
					Maximum Height										
				For Shade Widths to 84"	144"	144"	144"	144"	132"	144"	144"	144"	144"	144"	144"
				For Shade Widths to 90"	138"	144"	138"	138"	132"	138"	138"	138"	144"	138"	144"
				For Shade Widths to 96"	108"	144"	108"	108"	108"	108"	108"	108"	144"	108"	144"
				For Shade Widths to 100"	84"	144"	84"	84"	84"	84"	84"	84"	144"	84"	144"
				For Shade Widths to 102"	84"	144"	NA	NA	84"	84"	84"	84"	144"	84"	144"
				For Shade Widths over 102"	NA	144"	NA	NA	NA	NA	NA	NA	144"	NA	144"
				Railroaded											
				Maximum Width	102"	144"	102"	102"	102"	102"	102"	102"	144"	102"	144"
					Maximum Height										
				For Shade Widths to 84"	144"	144"	144"	144"	132"	144"	144"	144"	144"	144"	144"
				For Shade Widths to 90"	138"	144"	138"	138"	132"	138"	138"	138"	144"	138"	144"
				For Shade Widths to 96"	108"	144"	108"	108"	108"	108"	108"	108"	144"	108"	144"
				For Shade Widths to 102"	84"	144"	84"	84"	84"	84"	84"	84"	144"	84"	144"
				For Shade Widths over 102"	NA	144"	NA	NA	NA	NA	NA	NA	144"	NA	132"
Darien	90"	NO	NO	Non-Railroaded											
				Maximum Width	90"	90"	80"	80"	90"	90"	90"	90"	90"	90"	90"
					Maximum Height										
				For Shade Widths to 80"	144"	144"	144"	144"	144"	144"	144"	144"	144"	144"	144"
				For Shade Widths to 90"	144"	144"	NA	NA	144"	144"	144"	144"	144"	144"	144"

PRODUCT SIZE SPECIFICATIONS – HARDWIRED MOTORIZATION

Minimum and Maximum Standards

Please Note: Shade sizes that are wider than the fabric roll width indicated will be made with the fabric turned width for length (railroaded). The maximum width for non-railroaded shades is the roll width unless otherwise noted.

Fabrics turned width for length will have a visible seam when fabricated longer than their maximum roll width less 10". Fabrics turned width for length may have an edge curl. This is not considered a defect in the product.

Motor Type	Motor Name	Min Width	Min Height	Weight Capacity
24v Low-Voltage	ST-30 Quiet	18-1/2"	12"	Lifts up to 23 lbs.
110v Hardwired	ST-50 Quiet	33"	12"	Lifts up to 52 lbs.
110v Hardwired	ST-50 Ultra Quiet	39"	12"	Lifts up to 52 lbs.

Note: 110v Motorized shades are available without top treatment, with 4" R-series Fascia, or with Pocket. Maximum width for each coupled shade is 120" and maximum overall width is 216". 4" R-series Fascia & Pocket will spliced in the center when width exceed 190".

Material Name	Roll Width	Railroad Option	Splice /Seam		Motorized Shade without Top Treament		Motorized Shade Deluxe Valance	Motorized Shade Fabric Valance	Motorized Shade with Medium Cassette	Motorized Shade with Large Cassette	Motorized Shade with 3" Fascia	Motorized Shade with 4" Fascia		Motorized Shade with Pocket Headrail	
					24v	110v	24v	24v	24v	24v	24v	24v	110v	24v	110v
Drizzle	94"	YES	YES	Non-Railroaded											
				Maximum Width	94"	94"	84"	84"	94"	94"	94"	94"	94"	94"	94"
					Maximum Height										
				For Shade Widths to 68"	144"	144"	144"	144"	144"	144"	144"	144"	144"	144"	144"
				For Shade Widths to 78"	144"	144"	144"	144"	144"	144"	144"	144"	144"	144"	144"
				For Shade Widths to 84"	144"	144"	144"	144"	144"	144"	144"	144"	144"	144"	144"
				For Shade Widths to 90"	144"	144"	NA	NA	144"	144"	144"	144"	144"	144"	144"
				For Shade Widths over 90"	144"	144"	NA	NA	144"	144"	144"	144"	144"	144"	144"
				Railroaded											
				Maximum Width	120"	120"	120"	120"	120"	120"	120"	120"	120"	120"	120"
					Maximum Height										
				For Shade Widths to 78"	144"	144"	144"	144"	144"	144"	144"	144"	144"	144"	144"
				For Shade Widths to 96"	120"	120"	120"	120"	120"	120"	120"	120"	120"	120"	120"
				For Shade Width to over 96"	60"	120"	60"	60"	60"	60"	60"	60"	120"	60"	120"
Fiona	78"	NO	NO	Non-Railroaded											
				Maximum Width	78"	78"	68"	68"	78"	78"	78"	78"	78"	78"	78"
					Maximum Height										
				For Shade Widths to 68"	144"	144"	144"	144"	144"	144"	144"	144"	144"	144"	144"
				For Shade Widths to 78"	144"	144"	NA	NA	144"	144"	144"	144"	144"	144"	144"
Flocke Blackout	94"	YES	YES	Non-Railroaded											
				Maximum Width	94"	94"	84"	84"	94"	94"	94"	94"	94"	94"	94"
					Maximum Height										
				For Shade Widths to 72"	144"	144"	144"	144"	126"	144"	144"	144"	144"	144"	144"
				For Shade Widths to 84"	126"	144"	126"	126"	126"	126"	126"	126"	144"	126"	144"
				For Shade Widths to 90"	96"	144"	NA	NA	96"	96"	96"	96"	144"	96"	144"
				For Shade Widths over 90"	78"	144"	NA	NA	78"	78"	78"	78"	144"	78"	144"
				Railroaded											
				Maximum Width	102"	144"	102"	102"	102"	102"	102"	102"	144"	102"	144"
					Maximum Height										
				For Shade Widths to 72"	144"	144"	144"	144"	126"	144"	144"	144"	144"	144"	144"
				For Shade Widths to 84"	126"	144"	126"	126"	126"	126"	126"	126"	144"	126"	144"
				For Shade Widths to 90"	96"	144"	96"	96"	96"	96"	96"	96"	144"	96"	144"
				For Shade Widths over 90"	60"	144"	60"	60"	60"	60"	60"	60"	144"	60"	132"
Hayworth	98"	YES	YES	Non-Railroaded											
				Maximum Width	98"	98"	88"	88"	98"	98"	98"	98"	98"	98"	98"
					Maximum Height										
				For Shade Widths to 88"	144"	144"	144"	144"	144"	144"	144"	144"	144"	144"	144"
				For Shade Widths over 88"	144"	144"	NA	NA	144"	144"	144"	144"	144"	144"	144"
				Railroaded											
				Maximum Width	120"	144"	120"	120"	120"	120"	120"	120"	144"	120"	144"
					Maximum Height										
				For Shade Widths to 102"	144"	144"	144"	144"	144"	144"	144"	144"	144"	144"	144"
				For Shade Widths to 108"	108"	144"	108"	108"	108"	108"	108"	108"	144"	108"	144"
				For Shade Widths to 114"	84"	144"	84"	84"	84"	84"	84"	84"	144"	84"	144"
				For Shade Widths to 120"	60"	144"	60"	60"	60"	60"	60"	60"	144"	60"	144"
				For Shade Widths over 120"	NA	144"	NA	NA	NA	NA	NA	NA	144"	NA	144"
Illusion	72"	YES	NO	Non-Railroaded											
				Maximum Width	72"	72"	62"	62"	72"	72"	72"	72"	72"	72"	72"
					Maximum Height										
				For Shade Widths to 62"	144"	144"	144"	144"	144"	144"	144"	144"	144"	144"	144"
				For Shade Widths to 72"	144"	144"	NA	NA	144"	144"	144"	144"	144"	144"	144"
				Railroaded											
				Maximum Width	120"	144"	120"	120"	120"	120"	120"	120"	144"	120"	144"
					Maximum Height										
				For Shade Widths to max width	60"	57"	60"	60"	60"	60"	60"	60"	57"	60"	57"

PRODUCT SIZE SPECIFICATIONS – HARDWIRED MOTORIZATION

Minimum and Maximum Standards

Please Note: Shade sizes that are wider than the fabric roll width indicated will be made with the fabric turned width for length (railroaded). The maximum width for non-railroaded shades is the roll width unless otherwise noted.

Fabrics turned width for length will have a visible seam when fabricated longer than their maximum roll width less 10". Fabrics turned width for length may have an edge curl. This is not considered a defect in the product.

Motor Type	Motor Name	Min Width	Min Height	Weight Capacity
24v Low-Voltage	ST-30 Quiet	18-1/2"	12"	Lifts up to 23 lbs.
110v Hardwired	ST-50 Quiet	33"	12"	Lifts up to 52 lbs.
110v Hardwired	ST-50 Ultra Quiet	39"	12"	Lifts up to 52 lbs.

Note: 110v Motorized shades are available without top treatment, with 4" R-series Fascia, or with Pocket. Maximum width for each coupled shade is 120" and maximum overall width is 216". 4" R-series Fascia & Pocket will spliced in the center when width exceed 190".

Material Name	Roll Width	Railroad Option	Splice /Seam		Motorized Shade without Top Treament		Motorized Shade Deluxe Valance	Motorized Shade Fabric Valance	Motorized Shade with Medium Cassette	Motorized Shade with Large Cassette	Motorized Shade with 3" Fascia	Motorized Shade with 4" Fascia		Motorized Shade with Pocket Headrail	
					24v	110v	24v	24v	24v	24v	24v	24v	110v	24v	110v
Jasper	110"	YES	YES	Non-Railroaded											
				Maximum Width	108"	110"	100"	100"	108"	108"	108"	108"	110"	108"	110"
					Maximum Height										
				For Shade Widths to 84"	144"	144"	144"	144"	144"	144"	144"	144"	144"	144"	144"
				For Shade Widths to 90"	138"	144"	138"	138"	138"	138"	138"	138"	144"	138"	144"
				For Shade Widths to 96"	108"	144"	108"	108"	108"	108"	108"	108"	144"	108"	144"
				For Shade Widths to 100"	84"	144"	84"	84"	84"	84"	84"	84"	144"	84"	144"
				For Shade Widths over 100"	66"	144"	N/A	N/A	66"	66"	66"	66"	144"	66"	144"
				Railroaded											
				Maximum Width	108"	144"	108"	108"	108"	108"	108"	108"	144"	108"	144"
					Maximum Height										
				For Shade Widths to 84"	144"	144"	144"	144"	144"	144"	144"	144"	144"	144"	144"
				For Shade Widths to 90"	138"	144"	138"	138"	138"	138"	138"	138"	144"	138"	144"
				For Shade Widths over 96"	108"	144"	108"	108"	108"	108"	108"	108"	144"	108"	144"
				For Shade Widths over 96"	66"	144"	66"	66"	66"	66"	66"	66"	144"	66"	144"
Linview	122"	YES	YES	Non-Railroaded											
				Maximum Width	108"	122"	108"	108"	108"	108"	108"	108"	122"	108"	122"
					Maximum Height										
				For Shade Widths to 96"	144"	144"	144"	144"	144"	144"	144"	144"	144"	144"	144"
				For Shade Widths to 102"	144"	144"	144"	144"	144"	144"	144"	144"	144"	144"	144"
				For Shade Widths over 102"	108"	144"	108"	108"	108"	108"	108"	108"	144"	108"	144"
				Maximum Width	108"	120"	108"	108"	108"	108"	108"	108"	120"	108"	120"
					Maximum Height										
				For Shade Widths to 96"	120"	120"	120"	120"	120"	120"	120"	120"	120"	120"	120"
				For Shade Widths to 102"	120"	120"	120"	120"	120"	120"	120"	120"	120"	120"	120"
				For Shade Widths over 102"	108"	120"	108"	108"	108"	108"	108"	108"	120"	108"	120"
Linview Blackout	94"	NO	NO	Non-Railroaded											
				Maximum Width	94"	94"	84"	84"	94"	94"	94"	94"	94"	94"	94"
					Maximum Height										
				For Shade Widths to 84"	144"	144"	144"	144"	144"	144"	144"	144"	144"	144"	144"
				For Shade Widths to 90"	138"	144"	NA	NA	138"	138"	138"	138"	144"	138"	144"
				For Shade Widths over 90"	108"	144"	NA	NA	108"	108"	108"	108"	144"	108"	144"
Montero	94"	NO	NO	Non-Railroaded											
				Maximum Width	94"	94"	84"	84"	94"	94"	94"	94"	94"	94"	94"
					Maximum Height										
				For Shade Widths to 84"	144"	144"	144"	144"	126"	144"	144"	144"	144"	144"	144"
				For Shade Widths to 90"	138"	144"	NA	NA	126"	138"	138"	138"	144"	138"	144"
				For Shade Widths over 90"	108"	144"	NA	NA	108"	108"	108"	108"	144"	108"	144"
Moravia	96"	NO	NO	Non-Railroaded											
				Maximum Width	96"	96"	86"	86"	96"	96"	96"	96"	96"	96"	96"
					Maximum Height										
				For Shade Widths to 86"	144"	144"	144"	144"	138"	144"	144"	144"	144"	144"	144"
				For Shade Widths over 86"	144"	144"	NA	NA	138"	144"	144"	144"	144"	144"	144"
Santa Cruz	94"	NO	NO	Non-Railroaded											
				Maximum Width	94"	94"	84"	84"	94"	94"	94"	94"	94"	94"	94"
					Maximum Height										
				For Shade Widths to 84"	144"	144"	144"	144"	138"	144"	144"	144"	144"	144"	144"
				For Shade Widths to 90"	138"	144"	NA	NA	138"	138"	138"	138"	144"	138"	144"
				For Shade Widths over 90"	108"	144"	NA	NA	108"	108"	108"	108"	144"	108"	144"
Santa Cruz Blackout	94"	NO	NO	Non-Railroaded											
				Maximum Width	94"	94"	84"	84"	94"	94"	94"	94"	94"	94"	94"
					Maximum Height										
				For Shade Widths to 72"	144"	144"	144"	144"	102"	144"	138"	144"	144"	144"	144"
				For Shade Widths to 84"	126"	144"	126"	126"	102"	126"	126"	126"	144"	126"	144"
				For Shade Widths to 90"	96"	144"	NA	NA	96"	96"	96"	96"	144"	96"	144"
				For Shade Widths over 90"	78"	144"	NA	NA	78"	78"	78"	78"	144"	78"	144"

PRODUCT SIZE SPECIFICATIONS – HARDWIRED MOTORIZATION

Minimum and Maximum Standards

Please Note: Shade sizes that are wider than the fabric roll width indicated will be made with the fabric turned width for length (railroaded). The maximum width for non-railroaded shades is the roll width unless otherwise noted.

Fabrics turned width for length will have a visible seam when fabricated longer than their maximum roll width less 10". Fabrics turned width for length may have an edge curl. This is not considered a defect in the product.

Motor Type	Motor Name	Min Width	Min Height	Weight Capacity
24v Low-Voltage	ST-30 Quiet	18-1/2"	12"	Lifts up to 23 lbs.
110v Hardwired	ST-50 Quiet	33"	12"	Lifts up to 52 lbs.
110v Hardwired	ST-50 Ultra Quiet	39"	12"	Lifts up to 52 lbs.

Note: 110v Motorized shades are available without top treatment, with 4" R-series Fascia, or with Pocket. Maximum width for each coupled shade is 120" and maximum overall width is 216". 4" R-series Fascia & Pocket will spliced in the center when width exceed 190".

Material Name	Roll Width	Railroad Option	Splice /Seam		Motorized Shade without Top Treament		Motorized Shade Deluxe Valance	Motorized Shade Fabric Valance	Motorized Shade with Medium Cassette	Motorized Shade with Large Cassette	Motorized Shade with 3" Fascia	Motorized Shade with 4" Fascia		Motorized Shade with Pocket Headrail	
					24v	110v	24v	24v	24v	24v	24v	24v	110v	24v	110v
Scala Blackout	110"	YES	YES	Non-Railroaded											
				Maximum Width	102"	110"	100"	100"	102"	102"	102"	102"	110"	102"	110"
					Maximum Height										
				For Shade Widths to 84"	144"	144"	144"	NA	144"	144"	144"	144"	144"	144"	144"
				For Shade Widths to 90"	138"	144"	138"	NA	138"	138"	138"	138"	144"	138"	144"
				For Shade Widths to 96"	108"	144"	108"	NA	108"	108"	108"	108"	144"	108"	144"
				For Shade Widths to 100"	84"	144"	84"	NA	84"	84"	84"	84"	144"	84"	144"
				For Shade Widths to 102"	84"	144"	NA	NA	84"	84"	84"	84"	144"	84"	144"
				For Shade Widths over 102"	NA	144"	NA	NA	NA	NA	NA	NA	144"	NA	144"
				Railroaded											
				Maximum Width	102"	144"	102"	102"	102"	102"	102"	102"	144"	102"	144"
					Maximum Height										
				For Shade Widths to 84"	144"	144"	144"	NA	144"	144"	144"	144"	144"	144"	144"
				For Shade Widths to 90"	138"	144"	138"	NA	138"	138"	138"	138"	144"	138"	144"
				For Shade Widths to 96"	108"	144"	108"	NA	108"	108"	108"	108"	144"	108"	144"
				For Shade Widths to 102"	84"	144"	84"	NA	84"	84"	84"	84"	144"	84"	144"
				For Shade Widths over 102"	NA	144"	NA	NA	NA	NA	NA	NA	144"	NA	144"
Sheerweave 7200R	118"	NO	NO	Non-Railroaded											
				Maximum Width	102"	118"	102"	102"	102"	102"	102"	102"	118"	102"	118"
					Maximum Height										
				For Shade Widths to 66"	144"	144"	144"	144"	114"	144"	144"	144"	144"	144"	144"
				For Shade Widths to 72"	144"	144"	144"	144"	114"	144"	144"	144"	144"	144"	144"
				For Shade Widths to 78"	144"	144"	144"	144"	114"	144"	144"	144"	144"	144"	144"
				For Shade Widths to 84"	144"	144"	144"	144"	114"	144"	144"	144"	144"	144"	144"
				For Shade Widths to 90"	138"	144"	138"	138"	114	138"	138"	138"	144"	138"	144"
				For Shade Widths to 96"	108"	144"	108"	108"	108"	108"	108"	108"	144"	108"	144"
				For Shade Widths to 102"	84"	144"	84"	84"	84"	84"	84"	84"	144"	84"	144"
				For Shade Widths over 102"	NA	144"	N/A	N/A	N/A	N/A	N/A	NA	144"	NA	120"
Sheerweave 7250R	118"	NO	NO	Non-Railroaded											
				Maximum Width	96"	96"	96"	96"	96"	96"	96"	96"	96"	96"	96"
					Maximum Height										
				For Shade Widths to 96"	120"	120"	120"	120"	120"	120"	120"	120"	120"	120"	120"
Sheerweave 7400	118"	NO	NO	Non-Railroaded											
				Maximum Width	96"	116"	96"	96"	96"	96"	96"	96"	116"	96"	116"
					Maximum Height										
				For Shade Widths to 54"	144"	144"	132"	132"	84"	132"	114"	144"	144"	144"	144"
				For Shade Widths to 60"	144"	144"	132"	132"	84"	132"	114"	144"	144"	144"	144"
				For Shade Widths to 66"	144"	144"	132"	132"	84"	132"	114"	144"	144"	144"	144"
				For Shade Widths to 72"	144"	144"	132"	132"	84"	132"	114"	144"	144"	144"	144"
				For Shade Widths to 78"	144"	144"	132"	132"	84"	132"	114"	144"	144"	144"	144"
				For Shade Widths to 84"	126"	144"	126"	126"	84"	126"	114"	126"	144"	126"	144"
				For Shade Widths to 90"	96"	144"	96"	96"	84"	96"	96"	96"	144"	96"	144"
				For Shade Widths to 96"	78"	144"	78"	78"	78"	78"	78"	78"	144"	78"	144"
				For Shade Widths over 96"	NA	144"	NA	NA	NA	NA	NA	NA	144"	NA	114"
Sheerweave 7450	118"	NO	NO	Non-Railroaded											
				Maximum Width	108"	118"	108"	108"	108"	108"	108"	108"	118"	108"	118"
					Maximum Height										
				For Shade Widths to 96"	144"	144"	144"	144"	132"	144"	144"	144"	144"	144"	144"
				For Shade Widths to 102"	144"	144"	144"	144"	132"	144"	144"	144"	144"	144"	144"
				For Shade Widths to 108"	108"	144"	108"	108"	108"	108"	108"	108"	144"	108"	144"
				For Shade Widths over 108"	NA	144"	NA	NA	NA	NA	NA	NA	144"	NA	144"
Sheerweave 7500	118"	NO	NO	Non-Railroaded											
				Maximum Width	96"	96"	96"	NA	96"	96"	96"	96"	96"	96"	96"
					Maximum Height										
				For Shade Widths to 66"	120"	120"	120"	NA	120"	120"	120"	120"	120"	120"	120"
				For Shade Widths to 72"	120"	120"	120"	NA	120"	120"	120"	120"	120"	120"	120"
				For Shade Widths to 78"	120"	120"	120"	NA	120"	120"	120"	120"	120"	120"	120"
				For Shade Widths to 84"	120"	120"	120"	NA	120"	120"	120"	120"	120"	120"	120"
				For Shade Widths to 90"	120"	120"	120"	NA	120"	120"	120"	120"	120"	120"	120"
				For Shade Widths to 96"	108"	120"	108"	NA	108"	108"	108"	108"	120"	108"	120"

PRODUCT SIZE SPECIFICATIONS – HARDWIRED MOTORIZATION

Minimum and Maximum Standards

Please Note: Shade sizes that are wider than the fabric roll width indicated will be made with the fabric turned width for length (railroaded). The maximum width for non-railroaded shades is the roll width unless otherwise noted.

Fabrics turned width for length will have a visible seam when fabricated longer than their maximum roll width less 10". Fabrics turned width for length may have an edge curl. This is not considered a defect in the product.

Motor Type	Motor Name	Min Width	Min Height	Weight Capacity
24v Low-Voltage	ST-30 Quiet	18-1/2"	12"	Lifts up to 23 lbs.
110v Hardwired	ST-50 Quiet	33"	12"	Lifts up to 52 lbs.
110v Hardwired	ST-50 Ultra Quiet	39"	12"	Lifts up to 52 lbs.

Note: 110v Motorized shades are available without top treatment, with 4" R-series Fascia, or with Pocket. Maximum width for each coupled shade is 120" and maximum overall width is 216". 4" R-series Fascia & Pocket will spliced in the center when width exceed 190".

Material Name	Roll Width	Railroad Option	Splice /Seam		Motorized Shade without Top Treament		Motorized Shade Deluxe Valance	Motorized Shade Fabric Valance	Motorized Shade with Medium Cassette	Motorized Shade with Large Cassette	Motorized Shade with 3" Fascia	Motorized Shade with 4" Fascia		Motorized Shade with Pocket Headrail	
					24v	110v	24v	24v	24v	24v	24v	24v	110v	24v	110v
Sheerweave 7500R	118"	NO	NO	Non-Railroaded											
				Maximum Width	102"	118"	102"	NA	102"	102"	102"	102"	118"	102"	118"
					Maximum Height										
				For Shade Widths to 66"	144"	144"	144"	NA	144"	144"	144"	144"	144"	144"	144"
				For Shade Widths to 72"	144"	144"	144"	NA	144"	144"	144"	144"	144"	144"	144"
				For Shade Widths to 78"	144"	144"	144"	NA	144"	144"	144"	144"	144"	144"	144"
				For Shade Widths to 84"	144"	144"	144"	NA	144"	144"	144"	144"	144"	144"	144"
				For Shade Widths to 90"	138"	144"	138"	NA	138"	138"	138"	138"	144"	138"	144"
				For Shade Widths to 96"	108"	144"	108"	NA	108"	108"	108"	108"	144"	108"	144"
				For Shade Widths to 102"	84"	144"	84"	NA	84"	84"	84"	84"	144"	84"	144"
				For Shade Widths over 102"	NA	144"	NA	NA	NA	NA	NA	NA	144"	NA	144"
Sheerweave 7600	118"	NO	NO	Non-Railroaded											
				Maximum Width	102"	118"	102"	102"	102"	102"	102"	102"	118"	102"	118"
					Maximum Height										
				For Shade Widths to 66"	144"	144"	144"	144"	126"	144"	144"	144"	144"	144"	144"
				For Shade Widths to 72"	144"	144"	144"	144"	126"	144"	144"	144"	144"	144"	144"
				For Shade Widths to 78"	144"	144"	144"	144"	126"	144"	144"	144"	144"	144"	144"
				For Shade Widths to 84"	144"	144"	144"	144"	126"	144"	144"	144"	144"	144"	144"
				For Shade Widths to 90"	138"	144"	138"	138"	126"	138"	138"	138"	144"	138"	144"
				For Shade Widths to 96"	108"	144"	108"	108"	108"	108"	108"	108"	144"	108"	144"
				For Shade Widths to 102"	84"	144"	84"	84"	84"	84"	84"	84"	144"	84"	144"
				For Shade Widths over 102"	NA	144"	NA	NA	NA	NA	NA	NA	144"	NA	132"
Sheerweave 7650	118"	NO	NO	Non-Railroaded											
				Maximum Width	108"	116"	108"	108"	108"	108"	108"	108"	116"	108"	116"
					Maximum Height										
				For Shade Widths to 96"	144"	144"	144"	144"	144"	144"	144"	144"	144"	144"	144"
				For Shade Widths to 102"	144"	144"	144"	144"	144"	144"	144"	144"	144"	144"	144"
				For Shade Widths to 108"	108"	144"	108"	108"	108"	108"	108"	108"	144"	108"	144"
				For Shade Widths over 108"	NA	144"	NA	NA	NA	NA	NA	NA	144"	NA	144"
Sheerweave 7700R	118"	NO	NO	Non-Railroaded											
				Maximum Width	96"	118"	96"	96"	96"	96"	96"	96"	118"	96"	118"
					Maximum Height										
				For Shade Widths to 72"	144"	144"	144"	144"	96"	144"	132"	144"	144"	144"	144"
				For Shade Widths to 78"	144"	144"	144"	144"	96"	144"	132"	144"	144"	144"	144"
				For Shade Widths to 84"	126"	144"	126"	126"	96"	126"	126"	126"	144"	126"	144"
				For Shade Widths to 90"	96"	144"	96"	96"	96"	96"	96"	96"	144"	96"	144"
				For Shade Widths to 96"	78"	144"	78"	78"	78"	78"	78"	78"	144"	78"	144"
				For Shade Widths over to 96"	N/A	144"	N/A	N/A	N/A	N/A	N/A	N/A	144"	N/A	144"
Sheerweave 7750R	118"	NO	NO	Non-Railroaded											
				Maximum Width	98"	98"	98"	98"	98"	98"	98"	98"	98"	98"	98"
					Maximum Height										
				For Shade Widths to 66"	120"	120"	120"	120"	120"	120"	120"	120"	120"	120"	120"
				For Shade Widths to 72"	120"	120"	120"	120"	120"	120"	120"	120"	120"	120"	120"
				For Shade Widths to 78"	120"	120"	120"	120"	120"	120"	120"	120"	120"	120"	120"
				For Shade Widths to 84"	120"	120"	120"	120"	120"	120"	120"	120"	120"	120"	120"
				For Shade Widths to 90"	120"	120"	120"	120"	120"	120"	120"	120"	120"	120"	120"
				For Shade Widths to 96"	108"	120"	108"	108"	108"	108"	108"	108"	120"	108"	120"
				For Shade Widths to 98"	84"	120"	84"	84"	84"	84"	84"	84"	120"	84"	120"
Sorrento	108"	NO	NO	Non-Railroaded											
				Maximum Width	108"	108"	98"	98"	108"	108"	108"	108"	108"	108"	108"
					Maximum Height										
				For Shade Widths to 96"	144"	144"	144"	144"	108"	144"	144"	144"	144"	144"	144"
				For Shade Widths over 96"	108"	144"	108"	108"	108"	108"	108"	108"	144"	108"	144"

PRODUCT SIZE SPECIFICATIONS – HARDWIRED MOTORIZATION

Minimum and Maximum Standards

Please Note: Shade sizes that are wider than the fabric roll width indicated will be made with the fabric turned width for length (railroaded). The maximum width for non-railroaded shades is the roll width unless otherwise noted.

Fabrics turned width for length will have a visible seam when fabricated longer than their maximum roll width less 10". Fabrics turned width for length may have an edge curl. This is not considered a defect in the product.

Motor Type	Motor Name	Min Width	Min Height	Weight Capacity
24v Low-Voltage	ST-30 Quiet	18-1/2"	12"	Lifts up to 23 lbs.
110v Hardwired	ST-50 Quiet	33"	12"	Lifts up to 52 lbs.
110v Hardwired	ST-50 Ultra Quiet	39"	12"	Lifts up to 52 lbs.

Note: 110v Motorized shades are available without top treatment, with 4" R-series Fascia, or with Pocket. Maximum width for each coupled shade is 120" and maximum overall width is 216". 4" R-series Fascia & Pocket will spliced in the center when width exceed 190".

Material Name	Roll Width	Railroad Option	Splice /Seam		Motorized Shade without Top Treament		Motorized Shade Deluxe Valance	Motorized Shade Fabric Valance	Motorized Shade with Medium Cassette	Motorized Shade with Large Cassette	Motorized Shade with 3" Fascia	Motorized Shade with 4" Fascia		Motorized Shade with Pocket Headrail	
					24v	110v	24v	24v	24v	24v	24v	24v	110v	24v	110v
Sunscreen 7000	118"	YES	YES	Non-Railroaded											
				Maximum Width	102"	118"	102"	102"	102"	102"	102"	102"	118"	102"	118"
					Maximum Height										
				For Shade Widths to 72"	144"	144"	144"	144"	96"	144"	132"	144"	144"	144"	144"
				For Shade Widths to 84"	126"	144"	126"	126"	96"	126"	126"	126"	144"	126"	144"
				For Shade Widths to 90"	96"	144"	96"	96"	96"	96"	96"	96"	144"	96"	144"
				For Shade Widths to 96"	78"	144"	78"	78"	78"	78"	78"	78"	144"	78"	144"
				For Shade Widths over 96"	60"	144"	60"	60"	60"	60"	60"	60"	144"	60"	114"
				Railroaded											
				Maximum Width	102"	144"	102"	102"	102"	102"	102"	102"	144"	102"	144"
					Maximum Height										
				For Shade Widths to 72"	144"	144"	144"	144"	96"	144"	132"	144"	144"	144"	144"
				For Shade Widths to 84"	126"	144"	126"	126"	96"	126"	126"	126"	144"	126"	144"
				For Shade Widths to 90"	96"	144"	96"	96"	96"	96"	96"	96"	144"	96"	144"
				For Shade Widths to 96"	78"	144"	78"	78"	78"	78"	78"	78"	144"	78"	144"
				For Shade Widths over 96"	60"	144"	60"	60"	60"	60"	60"	60"	144"	60"	102"
Tundra	94"	NO	NO	Non-Railroaded											
				Maximum Width	94"	94"	84"	84"	94"	94"	94"	94"	94"	94"	94"
					Maximum Height										
				For Shade Widths to 84"	144"	144"	144"	144"	144"	144"	144"	144"	144"	144"	144"
				For Shade Widths to 90"	144"	144"	N/A	N/A	144"	144"	144"	144"	144"	144"	144"
				For Shade Widths to 94"	144"	144"	N/A	N/A	144"	144"	144"	144"	144"	144"	144"
Tundra Blackout	94"	NO	NO	Non-Railroaded											
				Maximum Width	94"	94"	84"	84"	94"	94"	94"	94"	94"	94"	94"
					Maximum Height										
				For Shade Widths to 66"	120"	120"	120"	120"	120"	120"	120"	120"	120"	120"	120"
				For Shade Widths to 72"	120"	120"	120"	120"	120"	120"	120"	120"	120"	120"	120"
				For Shade Widths to 78"	120"	120"	120"	120"	120"	120"	120"	120"	120"	120"	120"
				For Shade Widths to 84"	120"	120"	120"	120"	120"	120"	120"	120"	120"	120"	120"
				For Shade Widths to 90"	120"	120"	NA	NA	120"	120"	120"	120"	120"	120"	120"
				For Shade Widths to 94"	108"	120"	NA	NA	108"	108"	108"	108"	120"	108"	120"
Uptown *(R79_02)*	78"	YES	NO	Non-Railroaded											
				Maximum Width	78"	78"	68"	68"	78"	78"	78"	78"	78"	78"	78"
					Maximum Height										
				For Shade Widths to 68"	144"	144"	144"	144"	144"	144"	144"	144"	144"	144"	144"
				For Shade Widths to 78"	144"	144"	NA	NA	144"	144"	144"	144"	144"	144"	144"
				Railroaded											
				Maximum Width	120"	144"	120"	120"	120"	120"	120"	120"	144"	120"	144"
					Maximum Height										
				For Shade Widths to 102"	66"	63"	66"	66"	66"	66"	66"	66"	63"	66"	63"
				For Shade Widths over 102"	60"	63"	60"	60"	60"	60"	60"	60"	63"	60"	63"
Uptown Room Darkening *(R79_01)*	78"	YES	NO	Non-Railroaded											
				Maximum Width	78"	78"	68"	68"	78"	78"	78"	78"	78"	78"	78"
					Maximum Height										
				For Shade Widths to 68"	144"	144"	144"	144"	144"	144"	144"	144"	144"	144"	144"
				For Shade Widths to 78"	144"	144"	NA	NA	144"	144"	144"	144"	144"	144"	144"
				Railroaded											
				Maximum Width	108"	144"	108"	108"	108"	108"	108"	144"	144"	108"	144"
					Maximum Height										
				For Shade Widths to max width	66"	63"	66"	66"	66"	66"	66"	66"	63"	66"	63"

PRODUCT SIZE SPECIFICATIONS – HARDWIRED MOTORIZATION

Minimum and Maximum Standards

Please Note: Shade sizes that are wider than the fabric roll width indicated will be made with the fabric turned width for length (railroaded). The maximum width for non-railroaded shades is the roll width unless otherwise noted.

Fabrics turned width for length will have a visible seam when fabricated longer than their maximum roll width less 10". Fabrics turned width for length may have an edge curl. This is not considered a defect in the product.

Motor Type	Motor Name	Min Width	Min Height	Weight Capacity
24v Low-Voltage	ST-30 Quiet	18-1/2"	12"	Lifts up to 23 lbs.
110v Hardwired	ST-50 Quiet	33"	12"	Lifts up to 52 lbs.
110v Hardwired	ST-50 Ultra Quiet	39"	12"	Lifts up to 52 lbs.

Note: 110v Motorized shades are available without top treatment, with 4" R-series Fascia, or with Pocket. Maximum width for each coupled shade is 120" and maximum overall width is 216". 4" R-series Fascia & Pocket will spliced in the center when width exceed 190".

Material Name	Roll Width	Railroad Option	Splice /Seam		Motorized Shade without Top Treament		Motorized Shade Deluxe Valance	Motorized Shade Fabric Valance	Motorized Shade with Medium Cassette	Motorized Shade with Large Cassette	Motorized Shade with 3" Fascia	Motorized Shade with 4" Fascia		Motorized Shade with Pocket Headrail	
					24v	110v	24v	24v	24v	24v	24v	24v	110v	24v	110v
World Textures 1	78"	YES	YES	Non-Railroaded											
				Maximum Width	78"	78"	68"	68"	78"	78"	78"	78"	78"	78"	78"
					Maximum Height										
				For Shade Widths to 68"	144"	144"	144"	144"	138"	144"	144"	144"	144"	144"	144"
				For Shade Widths to 78"	144"	144"	NA	NA	138"	144"	144"	144"	144"	144"	144"
				Railroaded											
				Maximum Width	108"	144"	108"	108"	108"	108"	108"	108"	144"	108"	144"
					Maximum Height										
				For Shade Widths to 84"	144"	144"	144"	144"	138"	144"	144"	144"	144"	144"	144"
				For Shade Widths to 90"	138"	144"	138"	138"	138"	138"	138"	138"	144"	138"	144"
				For Shade Widths to 96"	108"	144"	108"	108"	108"	108"	108"	108"	144"	108"	144"
				For Shade Widths to 102"	84"	144"	84"	84"	84"	84"	84"	84"	144"	84"	144"
				For Shade Widths over 102"	66"	144"	66"	66"	66"	66"	66"	66"	144"	66"	144"
World Textures 1 Blackout	78"	YES	YES	Non-Railroaded											
				Maximum Width	78"	78"	68"	68"	78"	78"	78"	78"	78"	78"	78"
					Maximum Height										
				For Shade Widths to 68"	144"	144"	144"	144"	114"	144"	144"	144"	144"	144"	144"
				For Shade Widths to 78"	144"	144"	NA	NA	114"	144"	144"	144"	144"	144"	144"
				Railroaded											
				Maximum Width	102"	144"	102"	102"	102"	102"	102"	102"	144"	102"	144"
					Maximum Height										
				For Shade Widths to 84"	144"	144"	144"	144"	108"	144"	144"	144"	144"	144"	144"
				For Shade Widths to 90"	138"	144"	138"	138"	108"	138"	138"	138"	144"	138"	144"
				For Shade Widths to 96"	108"	144"	108"	108"	108"	108"	108"	108"	144"	108"	144"
				For Shade Widths to 102"	84"	144"	84"	84"	84"	84"	84"	84"	144"	84"	144"
				For Shade Widths over 102"	NA	144"	NA	NA	NA	NA	NA	NA	144"	NA	120"
World Textures 2	80"	YES	YES	Non-Railroaded											
				Maximum Width	80"	80"	70"	70"	80"	80"	80"	80"	80"	80"	80"
					Maximum Height										
				For Shade Widths to 70"	144"	144"	138"	138"	84"	138"	120"	144"	144"	144"	144"
				For Shade Widths to 80"	144"	144"	NA	NA	84"	138"	120"	144"	144"	144"	144"
				Railroaded											
				Maximum Width	102"	144"	102"	102"	102"	102"	102"	102"	144"	102"	144"
					Maximum Height										
				For Shade Widths to 84"	144"	144"	138"	138"	84"	138"	120"	144"	144"	144"	144"
				For Shade Widths to 90"	138"	144"	138"	138"	84"	138"	120"	138"	144"	138"	144"
				For Shade Widths to 96"	108"	144"	108"	108"	84"	108"	108"	108"	144"	108"	144"
				For Shade Widths to 102"	84"	144"	84"	84"	84"	84"	84"	84"	144"	84"	144"
				For Shade Widths over 102"	NA	144"	NA	NA	NA	NA	NA	NA	144"	NA	90"
World Textures 2 Blackout	80"	YES	YES	Non-Railroaded											
				Maximum Width	80"	80"	70"	70"	80"	80"	80"	80"	80"	80"	80"
					Maximum Height										
				For Shade Widths to 70"	144"	144"	144"	144"	114"	144"	144"	144"	144"	144"	144"
				For Shade Widths to 80"	144"	144"	NA	NA	114"	144"	144"	144"	144"	144"	144"
				Railroaded											
				Maximum Width	102"	144"	102"	102"	102"	102"	102"	102"	144"	102"	144"
					Maximum Height										
				For Shade Widths to 84"	144"	144"	144"	144"	114"	144"	144"	144"	144"	144"	144"
				For Shade Widths to 90"	138"	144"	138"	138"	114"	138"	138"	138"	144"	138"	144"
				For Shade Widths to 96"	108"	144"	108"	108"	108"	108"	108"	108"	144"	108"	144"
				For Shade Widths to 102"	84"	144"	84"	84"	84"	84"	84"	84"	144"	84"	144"
				For Shade Widths over 102"	NA	144"	NA	NA	NA	NA	NA	NA	144"	NA	120"

MOUNTING REQUIREMENTS

INSIDE MOUNT	Minimum Mounting Depth	Flush Mounting Depth
Clutch Roller	1-1/4"	2-1/8" to 4" (depending on roll diameter)
TouchLift Cordless	1"	2"
Small Cassette Valance	1-1/2"	2-7/8"
Medium Cassette Valance	1-1/2"	3-3/4"
Large Cassette Valance	1-1/2"	4-3/8"
Deluxe Valance (with returns)	1 -7/8"	4-1/4"
Deluxe Valance (without returns)	1-1/4"	3-1/8"
Fabric Valance	3/4" + shade clearance	3/4" + shade clearance
3" Fascia (R series)	2-5/8"	3-1/8"
3" Fascia (Skyline)	2-3/4"	3-1/4"
4" Fascia (R series)	3-5/8"	4-1/16"
4" Fascia (Skyline)	3-3/8"	4-3/16"
Pocket Headrail	3-5/8"	4-9/16"
Exterior Shades without Cassette	2"	2-1/2"
Exterior Shades with Cassette	2-1/2"	4-1/4"

OUTSIDE MOUNT	Minimum Mounting Surface Height
Clutch Roller	1-3/4"
TouchLift Cordless	1-1/2"
Small Cassette Valance	2-3/4"
Medium Cassette Valance	3-1/8"
Large Cassette Valance	4"
Deluxe Valance	2"
Fabric Valance	3"
3" Fascia (R Series)	2-3/4"
3" Fascia (Skyline)	2-5/8"
4" Fascia (R Series)	3-3/4"
4" Fascia (Skyline)	2-3/4"
Pocket Headrail	3-3/4"
Exterior Shades with Cable Guide System	4"

TWO-ON-ONE SHADE SIZE STANDARDS*	
Minimum ordered width - Cassette Valance	16"
Maximum Ordered width - Cassette Valance	144"
Maximum Height	See Spec Chart
Center Gap	1/2"

* Two-on-One shade option is not available with Fascia Options.

Each shade cannot exceed the maximum single shade size allowed for cassette (see shade size specifications)

NOTE: Cassette valances cannot be added to inside mount roller shades after they have been manufactured. They will not fit within the IB measurements.

CLUTCHES

The Skyline™ System Clutches and Brackets from Rollease – standard on all shades (R-Series is optional)

Skyline
- Features a sleek, rounded profile that's more aesthetically pleasing
- Spring-loaded pin-end technology allows for more flexibility and ease of installation
- Internal spring arrangement provides a smoother feel when pulling the shade up and down
- Universal brackets – color coordinated to clutch (Black or White)
- Rounded end caps provide a more polished look

R-Series
- Traditional design
- Features traditional blade and end plug bracketing system
- Ideal for commercial applications

FINISHED DIMENSIONS

Adjustments are taken from ordered dimensions. Width and height may vary ± 1/8"

SKYLINE CLUTCH ROLLER SHADES

For all options below, Shade Height = Ordered Height

INSIDE MOUNT	
Shade Width (Bracket to Bracket)	1/8" less than ordered width
Fabric & Tube Width *	1-1/8" less than ordered width

Fabric deduction can be up to 1-5/8" on large shades that use the SL20 or SL30 Clutch

INSIDE MOUNT - With Fabric Valance	
Valance Width	1/8" less than ordered width
Fabric & Tube Width *	1-1/8" less than ordered width

INSIDE MOUNT - With Deluxe Valance	
Valance Width (no returns)	1/8" less than ordered width
Valance Width (with returns)	1-1/8" **greater** than ordered width
Fabric & Tube Width *	1-1/8" less than ordered width

INSIDE MOUNT - With Small Cassette	
Cassette Width	1/8" less than ordered width
Fabric & Tube Width *	1-5/16" less than ordered width

INSIDE MOUNT - With Medium Cassette	
Cassette Width	1/8" less than ordered width
Fabric & Tube Width *	1-3/8" less than ordered width

INSIDE MOUNT - With Large Cassette	
Cassette Width	1/8" less than ordered width
Fabric & Tube Width *	1-3/8" less than ordered width

INSIDE MOUNT - With 3" and 4" Fascia	
Fascia Width	1/8" less than ordered width
Fabric & Tube Width *	1-1/8" less than ordered width

Fabric deduction can be up to 1-5/8" on large shades that use the SL20 or SL30 Clutch

INSIDE MOUNT - With 4" Pocket	
Pocket Width	1/8" less than ordered width
Fabric & Tube Width *	1-5/16" less than ordered width

Fabric deduction can be up to 1-5/8" on large shades that use the SL20 or SL30 Clutch

OUTSIDE MOUNT	
Shade Width (Bracket to Bracket)	1/4" **greater** than ordered width
Fabric & Tube Width *	3/4" less than ordered width

Fabric deduction can be up to 1-5/8" on large shades that use the SL20 or SL30 Clutch

OUTSIDE MOUNT - With Fabric Valance	
Valance Width	1-1/2" **greater** than ordered width
Fabric & Tube Width *	7/8" less than ordered width

OUTSIDE MOUNT - With Deluxe Valance	
Valance Width (no returns)	1-1/4" **greater** than ordered width
Valance Width (with returns)	2-5/8" **greater** than ordered width
Fabric & Tube Width *	3/4" less than ordered width

OUTSIDE MOUNT - With Small Cassette	
Cassette Width	1/4" **greater** than ordered width
Fabric & Tube Width *	15/16" less than ordered width

OUTSIDE MOUNT - With Medium Cassette	
Cassette Width	1/4" **greater** than ordered width
Fabric & Tube Width *	1" less than ordered width

OUTSIDE MOUNT - With Large Cassette	
Cassette Width	1/4" **greater** than ordered width
Fabric & Tube Width *	1" less than ordered width

OUTSIDE MOUNT - With 3" and 4" Fascia	
Fascia Width	1/4" **greater** than ordered width
Fabric & Tube Width *	3/4" less than ordered width

Fabric deduction can be up to 1-5/8" on large shades that use the SL20 or SL30 Clutch

OUTSIDE MOUNT - With 4" Pocket	
Pocket Width	1/4" **greater** than ordered width
Fabric & Tube Width *	15/16" less than ordered width

Fabric deduction can be up to 1-5/8" on large shades that use the SL20 or SL30 Clutch

* Add +1/4 to Fabric Width for the Bottomrail Width including end caps

EXACT END TO END MOUNT	
Shade Width (Bracket to Bracket)	ordered width
Fabric & Tube Width *	1" less than ordered width

Fabric deduction can be up to 1-7/8" on large shades that use the SL20 or SL30 Clutch

EXACT END TO END MOUNT - With Fabric Valance	
Valance Width	Ordered width
Fabric & Tube Width *	1" less than ordered width

Note: This mount type just apply to Valance of 3/4"

EXACT END TO END MOUNT - With Deluxe Valance	
Valance Width (no returns)	Ordered width
Valance Width (with returns)	N/A
Fabric & Tube Width *	1" less than ordered width

EXACT END TO END MOUNT - With Small Cassette	
Cassette Width	Ordered width
Fabric & Tube Width *	1- 3/16" less than ordered width

EXACT END TO END MOUNT - With Medium Cassette	
Cassette Width	Ordered width
Fabric & Tube Width *	1-1/4" less than ordered width

EXACT END TO END MOUNT - With Large Cassette	
Cassette Width	Ordered width
Fabric & Tube Width *	1-1/4" less than ordered width

EXACT END TO END MOUNT - With 3" and 4" Fascia	
Fascia Width	Ordered width
Fabric & Tube Width *	1" less than ordered width

Fabric deduction can be up to 1-7/8" on large shades that use the SL20 or SL30 Clutch

EXACT END TO END MOUNT - With 4" Pocket	
Pocket Width	ordered width
Fabric & Tube Width *	1-3/16" less than ordered width

Fabric deduction can be up to 1-7/8" on large shades that use the SL20 or SL30 Clutch

* Add +1/4 to Fabric Width for the Bottomrail Width including end caps

R SERIES CLUTCH ROLLER SHADES

For all options below, Shade Height = Ordered Height

INSIDE MOUNT	
Shade Width (Bracket to Bracket)	1/8" less than ordered width
Fabric & Tube Width *	1-1/4" less than ordered width

Fabric deduction can be up to 1-5/8" on large shades

INSIDE MOUNT - With Fabric Valance	
Valance Width	1/8" less than ordered width
Fabric & Tube Width *	1-1/4" less than ordered width

INSIDE MOUNT - With Deluxe Valance	
Valance Width (no returns)	1/8" less than ordered width
Valance Width (with returns)	1 1/8" **greater** than ordered width
Fabric & Tube Width *	1-1/4" less than ordered width

INSIDE MOUNT - With Small Cassette	
Cassette Width	1/8" less than ordered width
Fabric & Tube Width *	1-1/16" less than ordered width

INSIDE MOUNT - With Medium Cassette	
Cassette Width	1/8" less than ordered width
Fabric & Tube Width *	1-1/8" less than ordered width

INSIDE MOUNT - With Large Cassette	
Cassette Width	1/8" less than ordered width
Fabric & Tube Width *	1-1/8" less than ordered width

INSIDE MOUNT - With 3" & 4" Fascia	
Fascia Width	1/8" less than ordered width
Fabric & Tube Width *	1-1/4" less than ordered width

Fabric deduction can be up to 1-5/8" on large shades

INSIDE MOUNT - With 4" Pocket	
Pocket Width	1/8" less than ordered width
Fabric & Tube Width *	1-13/16" less than ordered width

Fabric deduction can be up to 1-13/16" on large shades

OUTSIDE MOUNT	
Shade Width (Bracket to Bracket)	1/4" **greater** than ordered width
Fabric & Tube Width *	7/8" less than ordered width

Fabric deduction can be up to 1-1/4" on large shades

OUTSIDE MOUNT - With Fabric Valance	
Valance Width	1-1/2" **greater** than ordered width
Fabric & Tube Width *	7/8" less than ordered width

OUTSIDE MOUNT - With Deluxe Valance	
Valance Width (no returns)	1-1/4" **greater** than ordered width
Valance Width (with returns)	2-5/8" **greater** than ordered width
Fabric & Tube Width *	7/8" less than ordered width

OUTSIDE MOUNT - With Small Cassette	
Cassette Width	1/4" **greater** than ordered width
Fabric & Tube Width *	11/16" less than ordered width

OUTSIDE MOUNT - With Medium Cassette	
Cassette Width	1/4" **greater** than ordered width
Fabric & Tube Width *	3/4" less than ordered width

OUTSIDE MOUNT - With Large Cassette	
Cassette Width	1/4" **greater** than ordered width
Fabric & Tube Width *	3/4" less than ordered width

OUTSIDE MOUNT - With 3" & 4" Fascia	
Fascia Width	1/4" **greater** than ordered width
Fabric & Tube Width *	7/8" less than ordered width

Fabric deduction can be up to 1-1/4" on large shades

OUTSIDE MOUNT - With 4" Pocket	
Pocket Width	1/4" **greater** than ordered width
Fabric & Tube Width *	1-7/16" less than ordered width

* Add +1/4 to Fabric Width for the Bottomrail Width including end caps

EXACT END TO END MOUNT	
Shade Width (Bracket to Bracket)	ordered width
Fabric & Tube Width *	1-1/8" less than ordered width

Fabric deduction can be up to 1-1/4" on large shades

EXACT END TO END MOUNT - With Fabric Valance	
Valance Width	Ordered width
Fabric & Tube Width *	1-1/8" less than ordered width

Note: This mount type just apply to Valance of 3/4"

EXACT END TO END MOUNT - With Deluxe Valance	
Valance Width (no returns)	Ordered width
Valance Width (with returns)	N/A
Fabric & Tube Width *	1-1/8" less than ordered width

EXACT END TO END MOUNT - With Small Cassette	
Cassette Width	Ordered width
Fabric & Tube Width *	15/16" less than ordered width

EXACT END TO END MOUNT - With Medium Cassette	
Cassette Width	Ordered width
Fabric & Tube Width *	1" less than ordered width

EXACT END TO END MOUNT - With Large Cassette	
Cassette Width	Ordered width
Fabric & Tube Width *	1" less than ordered width

EXACT END TO END MOUNT - With 3" & 4" Fascia	
Fascia Width	Ordered width
Fabric & Tube Width *	1-1/8" less than ordered width

Fabric deduction can be up to 1-1/2" on large shades

EXACT END TO END MOUNT - With 4" Pocket	
Pocket Width	Ordered width
Fabric & Tube Width *	1-11/16" less than ordered width

* Add +1/4 to Fabric Width for the Bottomrail Width including end caps

FINISHED DIMENSIONS

Adjustments are taken from ordered dimensions. Width and height may vary ± 1/8"

TOUCHLIFT CORDLESS ROLLER SHADES

For all options below, Shade Height = Ordered Height

INSIDE MOUNT	
Shade Width	1/8" less than ordered width
Fabric Width *	3/4" less than ordered width
Tube Width	1-5/16" less than ordered width

INSIDE MOUNT - With Fabric Valance	
Valance Width	1/8" less than ordered width
Fabric Width *	3/4" less than ordered width
Tube Width	1-5/16" less than ordered width

INSIDE MOUNT - With Deluxe Valance	
Valance Width (no returns)	1/8" less than ordered width
Valance Width (with returns)	1 1/8" **greater** than ordered width
Fabric Width *	3/4" less than ordered width
Tube Width	1-5/16" less than ordered width

INSIDE MOUNT - With Medium Cassette	
Cassette Width	1/8" less than ordered width
Fabric Width *	1-1/16" less than ordered width
Tube Width	1-5/8" less than ordered width

INSIDE MOUNT - With Large Cassette	
Cassette Width	1/8" less than ordered width
Fabric Width *	1-1/16" less than ordered width
Tube Width	1-5/8" less than ordered width

OUTSIDE MOUNT	
Shade Width	Ordered width
Fabric Width *	5/8" less than ordered width
Tube Width	1-3/16" less than ordered width

OUTSIDE MOUNT - With Fabric Valance	
Valance Width	1 -1 / 2" **greater** than ordered width
Fabric Width *	5/8" less than ordered width
Tube Width	1-3/16" less than ordered width

OUTSIDE MOUNT - With Deluxe Valance	
Valance Width (no returns)	1" **greater** than ordered widht
Valance Width (with returns)	2 3/8 **greater** than ordered width
Fabric Width *	5/8" less than ordered width
Tube Width	1-3/16" less than ordered width

OUTSIDE MOUNT - With Medium Cassette	
Cassette Width	Ordered width
Fabric Width *	15/16" less than ordered width
Tube Width	1-1/2" less than ordered width

OUTSIDE MOUNT - With Large Cassette	
Cassette Width	Ordered width
Fabric Width *	15/16" less than ordered width
Tube Width	1-1/2" less than ordered width

* Add +1/4 to Fabric Width for the Bottomrail Width including end caps

EXACT END TO END MOUNT	
Shade Width	Ordered width
Fabric Width *	5/8" less than ordered width
Tube Width	1-3/16" less than ordered width

EXACT END TO END - With Fabric Valance	
Valance Width	Ordered width
Fabric Width *	5/8" less than ordered width
Tube Width	1-3/16" less than ordered width

Note: This mount type just apply to Valance of 3/4"

EXACT END TO END - With Deluxe Valance	
Valance Width (no returns)	Ordered width
Valance Width (with returns)	N/A
Fabric Width *	5/8" less than ordered width
Tube Width	1-3/16" less than ordered width

EXACT END TO END - With Medium Cassette	
Cassette Width	Ordered width
Fabric Width *	15/16" less than ordered width
Tube Width	1-1/2" less than ordered width

EXACT END TO END - With Large Cassette	
Cassette Width	Ordered width
Fabric Width *	15/16" less than ordered width
Tube Width	1-1/2" less than ordered width

* Add +1/4 to Fabric Width for the Bottomrail Width including end caps

FINISHED DIMENSIONS

Adjustments are taken from ordered dimensions. Width and height may vary ± 1/8"

PowerWand™ ROLLER SHADES

Rechargeable

For all options below, Shade Height = Ordered Height

INSIDE MOUNT	
Shade Width (Bracket to Bracket)	1/8" less than ordered width
Fabric & Tube Width *	1-1/4" less than ordered width

INSIDE MOUNT - With Fabric Valance	
Valance Width	1/8" less than ordered width
Fabric & Tube Width *	1-3/8" less than ordered width

INSIDE MOUNT - With Deluxe Valance	
Valance Width (no returns)	1/8" less than ordered width
Valance Width (with returns)	1 1/8" **greater** than ordered width
Fabric & Tube Width *	1-1/4" less than ordered width

INSIDE MOUNT - With Medium Cassette	
Cassette Width	1/8" less than ordered width
Fabric & Tube Width *	1-1/2" less than ordered width

INSIDE MOUNT - With Large Cassette	
Cassette Width	1/8" less than ordered width
Fabric & Tube Width *	1-1/2" less than ordered width

OUTSIDE MOUNT	
Shade Width (Bracket to Bracket)	1/4" **greater** than ordered width
Fabric & Tube Width *	1" less than ordered width

OUTSIDE MOUNT - With Fabric Valance	
Valance Width	1 -3/4" **greater** than ordered width
Fabric & Tube Width *	1" less than ordered width

OUTSIDE MOUNT - With Deluxe Valance	
Valance Width (no returns)	1 -1/4 **greater** than ordered width
Valance Width (with returns)	2 -5/8 **greater** than ordered width
Fabric & Tube Width *	7/8" less than ordered width

OUTSIDE MOUNT - With Medium Cassette	
Cassette Width	1/4" **greater** than ordered width
Fabric & Tube Width *	1-1/8" less than ordered width

OUTSIDE MOUNT - With Large Cassette	
Cassette Width	1/4" **greater** than ordered width
Fabric & Tube Width *	1-1/8" less than ordered width

EXACT END TO END MOUNT	
Shade Width (Bracket to Bracket)	Ordered width
Fabric & Tube Width *	1-1/8" less than ordered width

EXACT END TO END MOUNT - With Fabric Valance	
Valance Width	Ordered width
Fabric & Tube Width *	1-1/4" less than ordered width

Note: This mount type just apply to Valance of 3/4"

EXACT END TO END MOUNT - With Deluxe Valance	
Valance Width (no returns)	Ordered width
Valance Width (with returns)	N/A
Fabric & Tube Width *	1-1/8" less than ordered width

EXACT END TO END MOUNT - With Medium Cassette	
Cassette Width	ordered width
Fabric & Tube Width *	1-3/8" less than ordered width

EXACT END TO END MOUNT - With Large Cassette	
Cassette Width	Ordered width
Fabric & Tube Width *	1-3/8" less than ordered width

* Add +1/4 to Fabric Width for the Bottomrail Width including end caps

SIMPLICITY MOTOR ROLLER SHADES

1.1 Nm Tubular Rechargeable Motor

For all options below, Shade Height = Ordered Height

INSIDE MOUNT	
Shade Width (Bracket to Bracket)	1/8" less than ordered width
Fabric & Tube Width *	1-1/4" less than ordered width

INSIDE MOUNT - With Fabric Valance	
Valance Width	1/8" less than ordered width
Fabric & Tube Width *	1-3/8" less than ordered width

INSIDE MOUNT - With Deluxe Valance	
Valance Width (no returns)	1/8" less than ordered width
Valance Width (with returns)	1 1/8" **greater** than ordered width
Fabric & Tube Width *	1-1/4" less than ordered width

INSIDE MOUNT - With Medium Cassette	
Cassette Width	1/8" less than ordered width
Fabric & Tube Width *	1-1/2" less than ordered width

INSIDE MOUNT - With Large Cassette	
Cassette Width	1/8" less than ordered width
Fabric & Tube Width *	1-1/2" less than ordered width

OUTSIDE MOUNT	
Shade Width (Bracket to Bracket)	1/4" **greater** than ordered width
Fabric & Tube Width *	1" less than ordered width

OUTSIDE MOUNT - With Fabric Valance	
Valance Width	1 -3/4" **greater** than ordered width
Fabric & Tube Width *	1" less than ordered width

OUTSIDE MOUNT - With Deluxe Valance	
Valance Width (no returns)	1 -1/4 **greater** than ordered width
Valance Width (with returns)	2 -5/8 **greater** than ordered width
Fabric & Tube Width *	7/8" less than ordered width

OUTSIDE MOUNT - With Medium Cassette	
Cassette Width	1/4" **greater** than ordered width
Fabric & Tube Width *	1-1/8" less than ordered width

OUTSIDE MOUNT - With Large Cassette	
Cassette Width	1/4" **greater** than ordered width
Fabric & Tube Width *	1-1/8" less than ordered width

EXACT END TO END MOUNT	
Shade Width (Bracket to Bracket)	Ordered width
Fabric & Tube Width *	1-1/8" less than ordered width

EXACT END TO END MOUNT - With Fabric Valance	
Valance Width	Ordered width
Fabric & Tube Width *	1-1/4" less than ordered width

Note: This mount type just apply to Valance of 3/4"

EXACT END TO END MOUNT - With Deluxe Valance	
Valance Width (no returns)	Ordered width
Valance Width (with returns)	N/A
Fabric & Tube Width *	1-1/8" less than ordered width

EXACT END TO END MOUNT - With Medium Cassette	
Cassette Width	Ordered width
Fabric & Tube Width *	1-3/8" less than ordered width

EXACT END TO END MOUNT - With Large Cassette	
Cassette Width	Ordered width
Fabric & Tube Width *	1-3/8" less than ordered width

* Add +1/4 to Fabric Width for the Bottomrail Width including end caps

FINISHED DIMENSIONS

Adjustments are taken from ordered dimensions. Width and height may vary ± 1/8"

REMOTELIFT & 24V HARDWIRED MOTORIZED ROLLER SHADES

RemoteLift (Wirefree): R28 RTS & Sonesse 30 Ultra RTS / Hardwired Sonesse 30 RTS

For all options below, Shade Height = Ordered Height

INSIDE MOUNT	
Shade Width (Bracket to Bracket)	1/8" less than ordered width
Fabric & Tube Width *	1-1/4" less than ordered width

INSIDE MOUNT - With Fabric Valance	
Valance Width	1/8" less than ordered width
Fabric & Tube Width *	1-1/4" less than ordered width

INSIDE MOUNT - With Deluxe Valance	
Valance Width (no returns)	1/8" less than ordered width
Valance Width (with returns)	1 1/8 **greater** than ordered width
Fabric & Tube Width *	1-1/4" less than ordered width

INSIDE MOUNT - With Medium Cassette	
Cassette Width	1/8" less than ordered width
Fabric & Tube Width *	1-1/2" less than ordered width

INSIDE MOUNT - With Large Cassette	
Cassette Width	1/8" less than ordered width
Fabric & Tube Width *	1-1/2" less than ordered width

INSIDE MOUNT - With 3" and 4" Fascia	
Fascia Width	1/8" less than ordered width
Fabric & Tube Width *	1-1/4" less than ordered width

INSIDE MOUNT - With 4" Pocket	
Pocket Width	1/8" less than ordered width
Fabric & Tube Width *	1-7/16" less than ordered width

OUTSIDE MOUNT	
Shade Width (Bracket to Bracket)	1/4" **greater** than ordered width
Fabric & Tube Width *	1" less than ordered width

OUTSIDE MOUNT - With Fabric Valance	
Valance Width	1 - 1 / 2" **greater** than ordered width
Fabric & Tube Width *	7/8 less than ordered width

OUTSIDE MOUNT - With Deluxe Valance	
Valance Width (no returns)	1 1/4 **greater** than ordered width
Valance Width (with returns)	2 5/8 **greater** than ordered width
Fabric & Tube Width *	7/8 less than ordered width

OUTSIDE MOUNT - With Medium Cassette	
Cassette Width	1/4" **greater** than ordered width
Fabric & Tube Width *	1-1/8" less than ordered width

OUTSIDE MOUNT - With Large Cassette	
Cassette Width	1/4" **greater** than ordered width
Fabric & Tube Width *	1-1/8" less than ordered width

OUTSIDE MOUNT - With 3" and 4" Fascia	
Fascia Width	1/4" **greater** than ordered width
Fabric & Tube Width *	7/8" less than ordered width

OUTSIDE MOUNT - With 4" Pocket	
Pocket Width	1/4" **greater** than ordered width
Fabric & Tube Width *	1-1/16" less than ordered width

* Add +1/4 to Fabric Width for the Bottomrail Width including end caps

EXACT END TO END MOUNT	
Shade Width (Bracket to Bracket)	Ordered width
Fabric & Tube Width *	1-1/8" less than ordered width

EXACT END TO END MOUNT - With Fabric Valance	
Valance Width	Ordered width
Fabric & Tube Width *	1 1/8 less than ordered width

Note: This mount type just apply for Valance of 3/4"

EXACT END TO END MOUNT - With Deluxe Valance	
Valance Width (no returns)	Ordered width
Valance Width (with returns)	N/A
Fabric & Tube Width *	1 1/8 less than ordered width

EXACT END TO END MOUNT - With Medium Cassette	
Cassette Width	Ordered width
Fabric & Tube Width *	1-3/8" less than ordered width

EXACT END TO END MOUNT - With Large Cassette	
Cassette Width	Ordered width
Fabric & Tube Width *	1-3/8" less than ordered width

EXACT END TO END MOUNT - With 3" and 4" Fascia	
Fascia Width	Ordered width
Fabric & Tube Width *	1-1/8" less than ordered width

EXACT END TO END MOUNT - With 4" Pocket	
Pocket Width	Ordered width
Fabric & Tube Width *	1-5/16" less than ordered width

* Add +1/4 to Fabric Width for the Bottomrail Width including end caps

HARDWIRED MOTORIZED ROLLER SHADES

ST50 I ST50R (Ultra Quiet)

For all options below, Shade Height = Ordered Height

INSIDE MOUNT	
Shade Width (Bracket to Bracket)	1/8" less than ordered width
Fabric & Tube Width *	2-3/8" less than ordered width

Fabric deduction can be up to 2-5/8" on large shades

INSIDE MOUNT - With Fabric Valance	
Valance Width	N/A
Fabric & Tube Width *	N/A

INSIDE MOUNT - With Deluxe Valance	
Valance Width (no returns)	N/A
Valance Width (with returns)	N/A
Fabric & Tube Width *	N/A

INSIDE MOUNT - With 4" Fascia (R-Series)	
Fascia Width	1/8" less than ordered width
Fabric & Tube Width *	2-3/8" less than ordered width

Fabric deduction can be up to 2-5/8" on large shades

INSIDE MOUNT - With 4" Pocket	
Pocket Width	1/8" less than ordered width
Fabric & Tube Width *	2-9/16" less than ordered width

Fabric deduction can be up to 2-13/16" on large shades

OUTSIDE MOUNT	
Shade Width (Bracket to Bracket)	1/4" greater than ordered width
Fabric & Tube Width *	2" less than ordered width

Fabric deduction can be up to 2-1/4" on large shades

OUTSIDE MOUNT - With Fabric Valance	
Valance Width	N/A
Fabric & Tube Width *	N/A

OUTSIDE MOUNT - With Deluxe Valance	
Valance Width (no returns)	N/A
Valance Width (with returns)	N/A
Fabric & Tube Width *	N/A

OUTSIDE MOUNT - With 4" Fascia (R-Series)	
Fascia Width	1/4" **greater** than ordered width
Fabric & Tube Width *	2" less than ordered width

Fabric deduction can be up to 2-1/4" on large shades

OUTSIDE MOUNT - With 4" Pocket	
Pocket Width	1/4" **greater** than ordered width
Fabric & Tube Width *	2-3/16" less than ordered width

Fabric deduction can be up to 2-7/16" on large shades

* Add +1/4 to Fabric Width for the Bottomrail Width including end caps

EXACT END TO END MOUNT	
Shade Width (Bracket to Bracket)	Ordered width
Fabric & Tube Width *	2-1/4" less than ordered width

Fabric deduction can be up to 2-1/2" on large shades

EXACT END TO END MOUNT - With Fabric Valance	
Valance Width	N/A
Fabric & Tube Width *	N/A

EXACT END TO END MOUNT - With Deluxe Valance	
Valance Width (no returns)	N/A
Valance Width (with returns)	N/A
Fabric & Tube Width *	N/A

EXACT END TO END MOUNT - With 4" Fascia (R-Series)	
Fascia Width	Ordered width
Fabric & Tube Width *	2-1/4" less than ordered width

Fabric deduction can be up to 2-1/2" on large shades

EXACT END TO END MOUNT - With 4" Pocket	
Pocket Width	Ordered width
Fabric & Tube Width *	2-7/16" less than ordered width

Fabric deduction can be up to 2-11/16" on large shades

* Add +1/4 to Fabric Width for the Bottomrail Width including end caps

FINISHED DIMENSIONS

Adjustments are taken from ordered dimensions. Width and height may vary ± 1/8"

EXTERIOR ROLLER SHADES

For all options below, Shade Height = Ordered Height

INSIDE MOUNT	
Shade Width (Bracket to Bracket)	1/8" less than ordered width
Fabric Width *	1-1/8" less than ordered width
Tube Width	1-1/8" less than ordered width

INSIDE MOUNT - With Large Cassette	
Cassette Width	1/8" less than ordered width
Fabric Width *	1-3/8" less than ordered width
Tube Width	1-3/8" less than ordered width

OUTSIDE MOUNT	
Shade Width (Bracket to Bracket)	1/4" greater than ordered width
Fabric Width *	7/8" less than ordered width
Tube Width	7/8" less than ordered width

OUTSIDE MOUNT - With Large Cassette	
Cassette Width	1/4" greater than ordered width
Fabric Width *	1" less than ordered width
Tube Width	1" less than ordered width

EXACT END TO END MOUNT	
Shade Width (Bracket to Bracket)	ordered width
Fabric Width *	1-1/8” less than ordered width
Tube Width	1-1/8" less than ordered width

EXACT END TO END MOUNT - With Large Cassette	
Cassette Width	ordered width
Fabric Width *	1 3/8” less than ordered width
Tube Width	1 3/8” less than ordered width

* Add +1/4 to Fabric Width for the Bottomrail Width including end caps

CABLE GUIDED EXTERIOR ROLLER SHADES

For all options below, Shade Height = Ordered Height

INSIDE MOUNT	
Shade Width (Bracket to Bracket)	1/8" less than ordered width
Fabric Width *	1-3/8" less than ordered width
Tube Width	1-3/8" less than ordered width

INSIDE MOUNT - With Large Cassette	
Cassette Width	1/8" less than ordered width
Fabric Width *	1-5/8" less than ordered width
Tube Width	1-5/8" less than ordered width

OUTSIDE MOUNT	
Shade Width (Bracket to Bracket)	1/4" greater than ordered width
Fabric Width *	1" less than ordered width
Tube Width	1" less than ordered width

OUTSIDE MOUNT - With Large Cassette	
Cassette Width	1/4" greater than ordered width
Fabric Width *	1-1/4" less than ordered width
Tube Width	1-1/4" less than ordered width

EXACT END TO END MOUNT	
Shade Width (Bracket to Bracket)	ordered width
Fabric Width *	1-1/4” less than ordered width
Tube Width	1-1/4” less than ordered width

EXACT END TO END - With Large Cassette	
Cassette Width	ordered width
Fabric Width *	1-1/2” less than ordered width
Tube Width	1-1/2” less than ordered width

* Add +1/4 to Fabric Width for the Bottomrail Width including end caps

HARDWARE COLOR COORDINATION CHART

			Clutch Component Set				TouchLift Mounting Bar Component Set	
Material Name	Color Name	Color #	Beaded Chain & Tensioner	Clutch & End Plugs Universal Brackets	Fabric Wrapped Bottomrail	Bracket and/or Bracket Cover	Cordless Mounting Bar & Bracket	Fabric Wrapped Bottomrail
1% E Screen	Charcoal/Charcoal	R8009	BLACK	BLACK	BLACK	BLACK	BLACK	BLACK
1% E Screen	Charcoal/Cocoa	R8007	BLACK	BLACK	BLACK	BLACK	BLACK	BLACK
1% E Screen	Charcoal/Grey	R8008	BLACK	BLACK	BLACK	BLACK	BLACK	BLACK
1% E Screen	White	R8004	WHITE	WHITE	WHITE	WHITE	WHITE	WHITE
1% E Screen	White/Linen	R8005	WHITE	WHITE	WHITE	WHITE	WHITE	WHITE
1% E Screen	White/Pearl	R8003	WHITE	WHITE	WHITE	WHITE	WHITE	WHITE
1% Sheerweave 2500	Beige	R01 Q20	WHITE	WHITE	WHITE	WHITE	WHITE	WHITE
1% Sheerweave 2500	Beige/Pearl Gray	R01 Q21	WHITE	WHITE	WHITE	WHITE	WHITE	WHITE
1% Sheerweave 2500	Charcoal	R0103	BLACK	BLACK	BLACK	BLACK	BLACK	BLACK
1% Sheerweave 2500	Charcoal/Alpaca	R0109	BLACK	BLACK	BLACK	BLACK	BLACK	BLACK
1% Sheerweave 2500	Charcoal/Chestnut	R0104	BLACK	BLACK	BLACK	BLACK	BLACK	BLACK
1% Sheerweave 2500	Charcoal/Gray	R01 V22	BLACK	BLACK	BLACK	BLACK	BLACK	BLACK
1% Sheerweave 2500	Oyster	R0105	WHITE	WHITE	WHITE	WHITE	WHITE	WHITE
1% Sheerweave 2500	Oyster/Beige	R0106	WHITE	WHITE	WHITE	WHITE	WHITE	WHITE
1% Sheerweave 2500	Oyster/Pearl Gray	R0107	WHITE	WHITE	WHITE	WHITE	WHITE	WHITE
1% Sheerweave 2500	Pearl Gray	R01 V20	WHITE	WHITE	WHITE	WHITE	WHITE	WHITE
1% Sheerweave 2701	Charcoal	RS21 V21	BLACK	BLACK	BLACK	BLACK	BLACK	BLACK
1% Sheerweave 2701	Charcoal/Brown	RS21 V66	BLACK	BLACK	BLACK	BLACK	BLACK	BLACK
1% Sheerweave 2701	Charcoal/Gray	RS21 V22	BLACK	BLACK	BLACK	BLACK	BLACK	BLACK
1% Sheerweave 2701	Charcoal/Slate	RS21 V64	BLACK	BLACK	BLACK	BLACK	BLACK	BLACK
1% Sheerweave 2701	Charcoal/Taupe	RS21 V65	BLACK	BLACK	BLACK	BLACK	BLACK	BLACK
1% Sheerweave 2701	Oyster	RS2101	WHITE	WHITE	WHITE	WHITE	WHITE	WHITE
1% Sheerweave 2701	Oyster/Beige	RS2102	WHITE	WHITE	WHITE	WHITE	WHITE	WHITE
1% Sheerweave 2701	Oyster/Charcoal	RS2106	BLACK	BLACK	BLACK	BLACK	BLACK	BLACK
1% Sheerweave 2701	Oyster/Chestnut	RS2105	BLACK	BLACK	BLACK	BLACK	BLACK	BLACK
1% Sheerweave 2701	Oyster/Pearl Gray	RS2103	BLACK	BLACK	BLACK	BLACK	BLACK	BLACK
1% Sheerweave 2701	Oyster/Pewter	RS2104	BLACK	BLACK	BLACK	BLACK	BLACK	BLACK
1% Sheerweave 4901	Birch	P4901 Q25	WHITE	WHITE	WHITE	WHITE	WHITE	WHITE
1% Sheerweave 4901	Chalk	P4901 P06	WHITE	WHITE	WHITE	WHITE	WHITE	WHITE
1% Sheerweave 4901	Chalk/Black	P4901 P25	BLACK	BLACK	BLACK	BLACK	BLACK	BLACK
1% Sheerweave 4901	Chalk/Wheat	P4901 P26	WHITE	WHITE	WHITE	WHITE	WHITE	WHITE
1% Sheerweave 4901	Cobblestone	P4901 Q26	WHITE	WHITE	WHITE	WHITE	WHITE	WHITE
1% Sheerweave 4901	Ebony	P4901 V10	BLACK	BLACK	BLACK	BLACK	BLACK	BLACK
1% Sheerweave 4901	Flaxen	P4901 Q22	WHITE	WHITE	WHITE	WHITE	WHITE	WHITE
1% Sheerweave 4901	Kettal Grey	P4901 Q07	WHITE	WHITE	WHITE	WHITE	WHITE	WHITE
1% Sheerweave 4901	Pewter/Chalk	P4901 V03	WHITE	WHITE	WHITE	WHITE	WHITE	WHITE
1% Sheerweave 4901	Slate	P4901 V28	BLACK	BLACK	BLACK	BLACK	BLACK	BLACK
1% Sheerweave 4901	Soft Grey	P4901 Q27	WHITE	WHITE	WHITE	WHITE	WHITE	WHITE
1% Sheerweave 4901	Tobacco	P4901 Q16	BLACK	BLACK	BLACK	BLACK	BLACK	BLACK
1% Sheerweave 4901	Whitesands	P4901 Q23	WHITE	WHITE	WHITE	WHITE	WHITE	WHITE
1% Sheerweave 5000	Jute/Coffee	P5001 R88	BLACK	BLACK	BLACK	BLACK	BLACK	BLACK
1% Sheerweave 5000	Jute/Flax	P5001 R86	WHITE	WHITE	WHITE	WHITE	WHITE	WHITE
1% Sheerweave 5000	Jute/Latte	P5001 R87	WHITE	WHITE	WHITE	WHITE	WHITE	WHITE
1% Sheerweave 5000	Jute/Parchment	P5001 R85	WHITE	WHITE	WHITE	WHITE	WHITE	WHITE
1% Toka	Bone	RS11002	WHITE	WHITE	WHITE	WHITE	WHITE	WHITE
1% Toka	Platinum	RS11003	WHITE	WHITE	WHITE	WHITE	WHITE	WHITE
1% Toka	White	RS11001	WHITE	WHITE	WHITE	WHITE	WHITE	WHITE
3% E Screen	Charcoal/Charcoal	R8102	BLACK	BLACK	BLACK	BLACK	BLACK	BLACK
3% E Screen	Charcoal/Cocoa	R8107	BLACK	BLACK	BLACK	BLACK	BLACK	BLACK
3% E Screen	Charcoal/Grey	R8108	BLACK	BLACK	BLACK	BLACK	BLACK	BLACK
3% E Screen	White/Linen	R8104	WHITE	WHITE	WHITE	WHITE	WHITE	WHITE
3% E Screen	White/Pearl	R8105	WHITE	WHITE	WHITE	WHITE	WHITE	WHITE
3% E Screen	White/White	R8106	WHITE	WHITE	WHITE	WHITE	WHITE	WHITE
3% M Screen	Charcoal/Apricot	R5803	BLACK	BLACK	BLACK	BLACK	BLACK	BLACK
3% M Screen	Charcoal/Charcoal	R5805	BLACK	BLACK	BLACK	BLACK	BLACK	BLACK
3% M Screen	Charcoal/Sable	R5808	BLACK	BLACK	BLACK	BLACK	BLACK	BLACK
3% M Screen	White Linen	R5807	WHITE	WHITE	WHITE	WHITE	WHITE	WHITE
3% M Screen	White/White	R5801	WHITE	WHITE	WHITE	WHITE	WHITE	WHITE
3% Sheerweave 2410	Beige	R06 Q20	WHITE	WHITE	WHITE	WHITE	WHITE	WHITE
3% Sheerweave 2410	Beige/Pearl Gray	R06 Q21	WHITE	WHITE	WHITE	WHITE	WHITE	WHITE
3% Sheerweave 2410	Charcoal/Alpaca	R0609	BLACK	BLACK	BLACK	BLACK	BLACK	BLACK
3% Sheerweave 2410	Charcoal/Chestnut	R0604	BLACK	BLACK	BLACK	BLACK	BLACK	BLACK
3% Sheerweave 2410	Charcoal/Gray	R06 V22	BLACK	BLACK	BLACK	BLACK	BLACK	BLACK
3% Sheerweave 2410	Oyster	R0605	WHITE	WHITE	WHITE	WHITE	WHITE	WHITE
3% Sheerweave 2410	Oyster/Beige	R0606	WHITE	WHITE	WHITE	WHITE	WHITE	WHITE
3% Sheerweave 2410	Oyster/Pearl Gray	R0607	WHITE	WHITE	WHITE	WHITE	WHITE	WHITE
3% Sheerweave 2410	Pearl Gray	R06 V20	BLACK	BLACK	BLACK	BLACK	BLACK	BLACK

* **STRONGLY RECOMMEND** Heat Sealed Hem as the Bottomrail option for bigger shades and for Sheerweave 5000 collections to improve appearance of the shade, and minimizing waviness.

The default color for the clutches, end plugs, plastic beaded chains, tensioners, and bottomrail for all patterns is either black or white as indicated above. Vanilla and bronze plastic beaded chains and tensioners are also available as an option, and must be specified at time of order. White and vanilla chains and tensioners will be coordinated to white clutches, end plugs, and bottomrails. Bronze and black chains and tensioners will be coordinated to black clutches, end plugs, and bottomrails.

Antique brass, nickel, oil rubbed & stainless steel chains will not have similar color coordinated component set, to ensure color coordinate as desired, please review colors under each clutch components.

NOTE: There are no pre-set default colors for cassette valances, fascia, or optional Deluxe bottomrails. These colors must be specified when ordering. Default trims not selected for Phifer screen patterns.

HARDWARE COLOR COORDINATION CHART

			Clutch Component Set				TouchLift Mounting Bar Component Set	
Material Name	Color Name	Color #	Beaded Chain & Tensioner	Clutch & End Plugs Universal Brackets	Fabric Wrapped Bottomrail	Bracket and/or Bracket Cover	Cordless Mounting Bar & Bracket	Fabric Wrapped Bottomrail
3% Sheerweave 2410	Charcoal	R0603	BLACK	BLACK	BLACK	BLACK	BLACK	BLACK
3% Sheerweave 2703	Charcoal	P2703 V21	BLACK	BLACK	BLACK	BLACK	BLACK	BLACK
3% Sheerweave 2703	Charcoal/Brown	P2703 V66	BLACK	BLACK	BLACK	BLACK	BLACK	BLACK
3% Sheerweave 2703	Charcoal/Gray	P2703 V22	BLACK	BLACK	BLACK	BLACK	BLACK	BLACK
3% Sheerweave 2703	Charcoal/Slate	P2703 V64	BLACK	BLACK	BLACK	BLACK	BLACK	BLACK
3% Sheerweave 2703	Charcoal/Taupe	P2703 V65	BLACK	BLACK	BLACK	BLACK	BLACK	BLACK
3% Sheerweave 2703	OYSTER	P2703 P12	WHITE	WHITE	WHITE	WHITE	WHITE	WHITE
3% Sheerweave 2703	OYSTER/BEIGE	P2703 P13	WHITE	WHITE	WHITE	WHITE	WHITE	WHITE
3% Sheerweave 2703	OYSTER/CHARCOAL	P2703 P28	BLACK	BLACK	BLACK	BLACK	BLACK	BLACK
3% Sheerweave 2703	OYSTER/CHESTNUT	P2703 P92	BLACK	BLACK	BLACK	BLACK	BLACK	BLACK
3% Sheerweave 2703	OYSTER/PEARL GRAY	P2703 P14	WHITE	WHITE	WHITE	WHITE	WHITE	WHITE
3% Sheerweave 2703	OYSTER/PEWTER	P2703 P91	WHITE	WHITE	WHITE	WHITE	WHITE	WHITE
3% Sheerweave 4400	Alabaster	RS2200	WHITE	WHITE	WHITE	WHITE	WHITE	WHITE
3% Sheerweave 4400	Ash	RS2 U64	BLACK	BLACK	BLACK	BLACK	BLACK	BLACK
3% Sheerweave 4400	Chalk	RS2202	WHITE	WHITE	WHITE	WHITE	WHITE	WHITE
3% Sheerweave 4400	Ebony	RS2 U65	BLACK	BLACK	BLACK	BLACK	BLACK	BLACK
3% Sheerweave 4400	Granite	RS2 U62	WHITE	WHITE	WHITE	WHITE	WHITE	WHITE
3% Sheerweave 4400	Greystone	RS2201	WHITE	WHITE	WHITE	WHITE	WHITE	WHITE
3% Sheerweave 4400	Pebblestone	RS2 U60	WHITE	WHITE	WHITE	WHITE	WHITE	WHITE
3% Sheerweave 4400	Pewter	RS2203	BLACK	BLACK	BLACK	BLACK	BLACK	BLACK
3% Sheerweave 4400	Tobacco	RS2 U66	BLACK	BLACK	BLACK	BLACK	BLACK	BLACK
3% Sheerweave 4600	Cappuccino	P4600 V95	BLACK	BLACK	N/A (Heat sealed only)	BLACK	BLACK	N/A (Heat sealed only)
3% Sheerweave 4600	Chalk	P4600 P06	WHITE	WHITE	WHITE	WHITE	WHITE	WHITE
3% Sheerweave 4600	Dark Bronze	P4600 V96	BLACK	BLACK	N/A (Heat sealed only)	BLACK	BLACK	N/A (Heat sealed only)
3% Sheerweave 4600	Ebony	P4600 V10	BLACK	BLACK	N/A (Heat sealed only)	BLACK	BLACK	N/A (Heat sealed only)
3% Sheerweave 4600	Ecru	P4600 Q59	WHITE	WHITE	WHITE	WHITE	WHITE	WHITE
3% Sheerweave 4600	Golden Sand	P4600 Q60	WHITE	WHITE	N/A (Heat sealed only)	WHITE	WHITE	N/A (Heat sealed only)
3% Sheerweave 4600	Granite	P4600 P10	WHITE	WHITE	N/A (Heat sealed only)	WHITE	WHITE	N/A (Heat sealed only)
3% Sheerweave 4600	Linen	P4600 U32	WHITE	WHITE	N/A (Heat sealed only)	WHITE	WHITE	N/A (Heat sealed only)
3% Sheerweave 4600	Pewter	P4600 V07	WHITE	WHITE	N/A (Heat sealed only)	WHITE	WHITE	N/A (Heat sealed only)
3% Sheerweave 4600	Sandstone	P4600 V44	WHITE	WHITE	N/A (Heat sealed only)	WHITE	WHITE	N/A (Heat sealed only)
3% Sheerweave 4903	Birch	P4903 Q25	WHITE	WHITE	WHITE	WHITE	WHITE	WHITE
3% Sheerweave 4903	Chalk	P4903 P06	WHITE	WHITE	WHITE	WHITE	WHITE	WHITE
3% Sheerweave 4903	Chalk/Black	P4903 P25	BLACK	BLACK	BLACK	BLACK	BLACK	BLACK
3% Sheerweave 4903	Chalk/Wheat	P4903 P26	WHITE	WHITE	WHITE	WHITE	WHITE	WHITE
3% Sheerweave 4903	Cobblestone	P4903 Q26	WHITE	WHITE	WHITE	WHITE	WHITE	WHITE
3% Sheerweave 4903	Ebony	P4903 V10	BLACK	BLACK	BLACK	BLACK	BLACK	BLACK
3% Sheerweave 4903	Flaxen	P4903 Q22	WHITE	WHITE	WHITE	WHITE	WHITE	WHITE
3% Sheerweave 4903	Kettal Grey	P4903 Q07	WHITE	WHITE	WHITE	WHITE	WHITE	WHITE
3% Sheerweave 4903	Pewter/Chalk	P4903 V03	WHITE	WHITE	WHITE	WHITE	WHITE	WHITE
3% Sheerweave 4903	Slate	P4903 V28	BLACK	BLACK	BLACK	BLACK	BLACK	BLACK
3% Sheerweave 4903	Soft Grey	P4903 Q27	WHITE	WHITE	WHITE	WHITE	WHITE	WHITE
3% Sheerweave 4903	Tobacco	P4903 Q16	BLACK	BLACK	BLACK	BLACK	BLACK	BLACK
3% Sheerweave 4903	Whitesands	P4903 Q23	WHITE	WHITE	WHITE	WHITE	WHITE	WHITE
3% Sheerweave 5000	Bark/Sienna	R0710	BLACK	BLACK	BLACK	BLACK	BLACK	BLACK
3% Sheerweave 5000	Chenille/Honey	R0707	WHITE	WHITE	WHITE	WHITE	WHITE	WHITE
3% Sheerweave 5000	Chenille/Marshmallow	R07 R89	WHITE	WHITE	WHITE	WHITE	WHITE	WHITE
3% Sheerweave 5000	Chenille/Pearl	R07 R90	WHITE	WHITE	WHITE	WHITE	WHITE	WHITE
3% Sheerweave 5000	Linen/Burlap	R07 U11	WHITE	WHITE	WHITE	WHITE	WHITE	WHITE
3% Sheerweave 5000	Linen/Cinnamon	R0702	BLACK	BLACK	BLACK	BLACK	BLACK	BLACK
3% Sheerweave 5000	Linen/Cranberry	R07 R11	BLACK	BLACK	BLACK	BLACK	BLACK	BLACK
3% Sheerweave 5000	Linen/Cream	R0704	WHITE	WHITE	WHITE	WHITE	WHITE	WHITE
3% Sheerweave 5000	Linen/Fig	R0705	BLACK	BLACK	BLACK	BLACK	BLACK	BLACK
3% Sheerweave 5000	Linen/Topaz	R07 U10	BLACK	BLACK	BLACK	BLACK	BLACK	BLACK
3% Sheerweave 5000	Wicker/Straw	R07 R93	WHITE	WHITE	WHITE	WHITE	WHITE	WHITE
3% T Screen	Charcoal/Charcoal	RS16005	BLACK	BLACK	BLACK	BLACK	BLACK	BLACK
3% T Screen	Charcoal/Grey	RS16006	BLACK	BLACK	BLACK	BLACK	BLACK	BLACK
3% T Screen	Sable/Charcoal	RS16003	BLACK	BLACK	BLACK	BLACK	BLACK	BLACK
3% T Screen	White/Pearl	RS16004	WHITE	WHITE	WHITE	WHITE	WHITE	WHITE
3% T Screen	White/Sable-Straw	RS16002	WHITE	WHITE	WHITE	WHITE	WHITE	WHITE
3% T Screen	White/White	RS16001	WHITE	WHITE	WHITE	WHITE	WHITE	WHITE
4% S Screen	Ginger	RS15006	BLACK	BLACK	BLACK	BLACK	BLACK	BLACK
4% S Screen	Granite	RS15004	BLACK	BLACK	BLACK	BLACK	BLACK	BLACK
4% S Screen	Papyrus	RS15003	BLACK	BLACK	BLACK	BLACK	BLACK	BLACK
4% S Screen	Porcelain	RS15001	WHITE	WHITE	WHITE	WHITE	WHITE	WHITE
4% S Screen	Sesame	RS15007	BLACK	BLACK	BLACK	BLACK	BLACK	BLACK

* **STRONGLY RECOMMEND** Heat Sealed Hem as the Bottomrail option for bigger shades and for Sheerweave 5000 collections to improve appearance of the shade, and minimizing waviness.

The default color for the clutches, end plugs, plastic beaded chains, tensioners, and bottomrail for all patterns is either black or white as indicated above. Vanilla and bronze plastic beaded chains and tensioners are also available as an option, and must be specified at time of order. White and vanilla chains and tensioners will be coordinated to white clutches, end plugs, and bottomrails. Bronze and black chains and tensioners will be coordinated to black clutches, end plugs, and bottomrails.

Antique brass, nickel, oil rubbed & stainless steel chains will not have similar color coordinated component set, to ensure color coordinate as desired, please review colors under each clutch components.

NOTE: There are no pre-set default colors for cassette valances, fascia, or optional Deluxe bottomrails. These colors must be specified when ordering. Default trims not selected for Phifer screen patterns.

HARDWARE COLOR COORDINATION CHART

			Clutch Component Set				TouchLift Mounting Bar Component Set	
Material Name	Color Name	Color #	Beaded Chain & Tensioner	Clutch & End Plugs Universal Brackets	Fabric Wrapped Bottomrail	Bracket and/or Bracket Cover	Cordless Mounting Bar & Bracket	Fabric Wrapped Bottomrail
4% Silver Screen	Beige	RS6501	WHITE	WHITE	WHITE	WHITE	WHITE	WHITE
4% Silver Screen	Black	RS6504	BLACK	BLACK	BLACK	BLACK	BLACK	BLACK
4% Silver Screen	Bronze	RS6503	BLACK	BLACK	BLACK	BLACK	BLACK	BLACK
4% Silver Screen	Light Grey	RS6500	WHITE	WHITE	WHITE	WHITE	WHITE	WHITE
4% Silver Screen	White	RS6502	WHITE	WHITE	WHITE	WHITE	WHITE	WHITE
5% E Screen	Charcoal/Charcoal	R5105	BLACK	BLACK	BLACK	BLACK	BLACK	BLACK
5% E Screen	Charcoal/Cocoa	R5104	BLACK	BLACK	BLACK	BLACK	BLACK	BLACK
5% E Screen	Charcoal/Grey	R5110	BLACK	BLACK	BLACK	BLACK	BLACK	BLACK
5% E Screen	Pure White	R5101	WHITE	WHITE	WHITE	WHITE	WHITE	WHITE
5% E Screen	White/Linen	R5108	WHITE	WHITE	WHITE	WHITE	WHITE	WHITE
5% E Screen	White/Pearl	R5109	WHITE	WHITE	WHITE	WHITE	WHITE	WHITE
5% M Screen Deco	Flagstone	R6107	BLACK	BLACK	BLACK	BLACK	BLACK	BLACK
5% M Screen Deco	Harvest Wheat	R6104	BLACK	BLACK	BLACK	BLACK	BLACK	BLACK
5% M Screen Deco	Hazelnut	R6105	BLACK	BLACK	BLACK	BLACK	BLACK	BLACK
5% M Screen Deco	Parchment	R6106	WHITE	WHITE	WHITE	WHITE	WHITE	WHITE
5% M Screen Deco	River Rock	R6102	WHITE	WHITE	WHITE	WHITE	WHITE	WHITE
5% M Screen Deco	Tumbleweed	R6103	WHITE	WHITE	WHITE	WHITE	WHITE	WHITE
5% Sheerweave 2000	Bone	P2000 Q05	WHITE	WHITE	WHITE	WHITE	WHITE	WHITE
5% Sheerweave 2000	Bone/Platinum	P2000 Q06	WHITE	WHITE	WHITE	WHITE	WHITE	WHITE
5% Sheerweave 2000	Bronze	P2000 Q10	BLACK	BLACK	BLACK	BLACK	BLACK	BLACK
5% Sheerweave 2000	Charcoal	P2000 V21	BLACK	BLACK	BLACK	BLACK	BLACK	BLACK
5% Sheerweave 2000	Charcoal/Chestnut	P2000 V24	BLACK	BLACK	BLACK	BLACK	BLACK	BLACK
5% Sheerweave 2000	Charcoal/Gray	P2000 V22	BLACK	BLACK	BLACK	BLACK	BLACK	BLACK
5% Sheerweave 2000	Platinum	P2000 V04	WHITE	WHITE	WHITE	WHITE	WHITE	WHITE
5% Sheerweave 2000	White	P2000 P02	WHITE	WHITE	WHITE	WHITE	WHITE	WHITE
5% Sheerweave 2000	White/Bone	P2000 P04	WHITE	WHITE	WHITE	WHITE	WHITE	WHITE
5% Sheerweave 2000	White/Platinum	P2000 P05	WHITE	WHITE	WHITE	WHITE	WHITE	WHITE
5% Sheerweave 2390	Beige	RS1 Q20	WHITE	WHITE	WHITE	WHITE	WHITE	WHITE
5% Sheerweave 2390	Beige/Pearl Gray	RS1 Q21	WHITE	WHITE	WHITE	WHITE	WHITE	WHITE
5% Sheerweave 2390	Charcoal	RS1105	BLACK	BLACK	BLACK	BLACK	BLACK	BLACK
5% Sheerweave 2390	Charcoal/Alpaca	RS1106	BLACK	BLACK	BLACK	BLACK	BLACK	BLACK
5% Sheerweave 2390	Charcoal/Chestnut	RS1104	BLACK	BLACK	BLACK	BLACK	BLACK	BLACK
5% Sheerweave 2390	Charcoal/Gray	RS1102	BLACK	BLACK	BLACK	BLACK	BLACK	BLACK
5% Sheerweave 2390	Oyster	RS1100	WHITE	WHITE	WHITE	WHITE	WHITE	WHITE
5% Sheerweave 2390	Oyster/Beige	RS1101	WHITE	WHITE	WHITE	WHITE	WHITE	WHITE
5% Sheerweave 2390	Oyster/Pearl Gray	RS1103	WHITE	WHITE	WHITE	WHITE	WHITE	WHITE
5% Sheerweave 2390	Pearl Gray	RS1 V20	WHITE	WHITE	WHITE	WHITE	WHITE	WHITE
5% Sheerweave 2705	Charcoal	P2705 V21	BLACK	BLACK	N/A (Heat sealed only)	BLACK	BLACK	N/A (Heat sealed only)
5% Sheerweave 2705	Charcoal/Brown	P2705 V66	BLACK	BLACK	N/A (Heat sealed only)	BLACK	BLACK	N/A (Heat sealed only)
5% Sheerweave 2705	Charcoal/Gray	P2705 V22	BLACK	BLACK	N/A (Heat sealed only)	BLACK	BLACK	N/A (Heat sealed only)
5% Sheerweave 2705	Charcoal/Slate	P2705 V64	BLACK	BLACK	N/A (Heat sealed only)	BLACK	BLACK	N/A (Heat sealed only)
5% Sheerweave 2705	Charcoal/Taupe	P2705 V65	BLACK	BLACK	N/A (Heat sealed only)	BLACK	BLACK	N/A (Heat sealed only)
5% Sheerweave 2705	Oyster	P2705 P12	WHITE	WHITE	N/A (Heat sealed only)	WHITE	WHITE	N/A (Heat sealed only)
5% Sheerweave 2705	Oyster/Beige	P2705 P13	WHITE	WHITE	N/A (Heat sealed only)	WHITE	WHITE	N/A (Heat sealed only)
5% Sheerweave 2705	Oyster/Charcoal	P2705 P28	BLACK	BLACK	N/A (Heat sealed only)	BLACK	BLACK	N/A (Heat sealed only)
5% Sheerweave 2705	Oyster/Chestnut	P2705 P92	BLACK	BLACK	N/A (Heat sealed only)	BLACK	BLACK	N/A (Heat sealed only)
5% Sheerweave 2705	Oyster/Pearl Gray	P2705 P14	WHITE	WHITE	N/A (Heat sealed only)	WHITE	WHITE	N/A (Heat sealed only)
5% Sheerweave 2705	Oyster/Pewter	P2705 P91	WHITE	WHITE	N/A (Heat sealed only)	WHITE	WHITE	N/A (Heat sealed only)
5% Sheerweave 4000	Alabaster	R0901	WHITE	WHITE	WHITE	WHITE	WHITE	WHITE
5% Sheerweave 4000	Ash	R09 U64	BLACK	BLACK	BLACK	BLACK	BLACK	BLACK
5% Sheerweave 4000	Chalk	R0902	WHITE	WHITE	WHITE	WHITE	WHITE	WHITE
5% Sheerweave 4000	Ebony	R09 U65	BLACK	BLACK	BLACK	BLACK	BLACK	BLACK
5% Sheerweave 4000	Granite	R0906	WHITE	WHITE	WHITE	WHITE	WHITE	WHITE
5% Sheerweave 4000	Greystone	R0904	WHITE	WHITE	WHITE	WHITE	WHITE	WHITE
5% Sheerweave 4000	Pebblestone	R09 U60	WHITE	WHITE	WHITE	WHITE	WHITE	WHITE
5% Sheerweave 4000	Pewter	R09 U63	WHITE	WHITE	WHITE	WHITE	WHITE	WHITE
5% Sheerweave 4000	Tobacco	R09 U66	BLACK	BLACK	BLACK	BLACK	BLACK	BLACK

* **STRONGLY RECOMMEND** Heat Sealed Hem as the Bottomrail option for bigger shades and for Sheerweave 5000 collections to improve appearance of the shade, and minimizing waviness.

The default color for the clutches, end plugs, plastic beaded chains, tensioners, and bottomrail for all patterns is either black or white as indicated above. Vanilla and bronze plastic beaded chains and tensioners are also available as an option, and must be specified at time of order. White and vanilla chains and tensioners will be coordinated to white clutches, end plugs, and bottomrails. Bronze and black chains and tensioners will be coordinated to black clutches, end plugs, and bottomrails.

Antique brass, nickel, oil rubbed & stainless steel chains will not have similar color coordinated component set, to ensure color coordinate as desired, please review colors under each clutch components.

NOTE: There are no pre-set default colors for cassette valances, fascia, or optional Deluxe bottomrails. These colors must be specified when ordering. Default trims not selected for Phifer screen patterns.

HARDWARE COLOR COORDINATION CHART

			Clutch Component Set				TouchLift Mounting Bar Component Set	
Material Name	Color Name	Color #	Beaded Chain & Tensioner	Clutch & End Plugs Universal Brackets	Fabric Wrapped Bottomrail	Bracket and/or Bracket Cover	Cordless Mounting Bar & Bracket	Fabric Wrapped Bottomrail
5% Sheerweave 4500	Cappuccino	P4500 V95	BLACK	BLACK	BLACK	BLACK	BLACK	BLACK
5% Sheerweave 4500	Chalk	P4500 P06	WHITE	WHITE	WHITE	WHITE	WHITE	WHITE
5% Sheerweave 4500	Dark Bronze	P4500 V96	BLACK	BLACK	BLACK	BLACK	BLACK	BLACK
5% Sheerweave 4500	Ebony	P4500 V10	BLACK	BLACK	BLACK	BLACK	BLACK	BLACK
5% Sheerweave 4500	Ecru	P4500 Q59	WHITE	WHITE	WHITE	WHITE	WHITE	WHITE
5% Sheerweave 4500	Golden Sand	P4500 Q60	WHITE	WHITE	WHITE	WHITE	WHITE	WHITE
5% Sheerweave 4500	Granite	P4500 P10	WHITE	WHITE	WHITE	WHITE	WHITE	WHITE
5% Sheerweave 4500	Linen	P4500 U32	WHITE	WHITE	WHITE	WHITE	WHITE	WHITE
5% Sheerweave 4500	Pewter	P4500 V07	WHITE	WHITE	WHITE	WHITE	WHITE	WHITE
5% Sheerweave 4500	Sandstone	P4500 V44	WHITE	WHITE	WHITE	WHITE	WHITE	WHITE
5% Sheerweave 5000	Aura Sable	R1021	BLACK	BLACK	BLACK	BLACK	BLACK	BLACK
5% Sheerweave 5000	Aura/Poetry	R10 S84	BLACK	BLACK	BLACK	BLACK	BLACK	BLACK
5% Sheerweave 5000	Bark/Ash	R1009	WHITE	WHITE	WHITE	WHITE	WHITE	WHITE
5% Sheerweave 5000	Bark/Pewter	R1010	WHITE	WHITE	WHITE	WHITE	WHITE	WHITE
5% Sheerweave 5000	Bark/Tiger Oak	R1001	BLACK	BLACK	BLACK	BLACK	BLACK	BLACK
5% Sheerweave 5000	Chenille/Driftwood	R1007	BLACK	BLACK	BLACK	BLACK	BLACK	BLACK
5% Sheerweave 5000	Coffee	R10 S82	BLACK	BLACK	BLACK	BLACK	BLACK	BLACK
5% Sheerweave 5000	Contour Essence	R1017	WHITE	WHITE	WHITE	WHITE	WHITE	WHITE
5% Sheerweave 5000	Contour Natural	R1016	WHITE	WHITE	WHITE	WHITE	WHITE	WHITE
5% Sheerweave 5000	Contour Smoke	R1018	BLACK	BLACK	BLACK	BLACK	BLACK	BLACK
5% Sheerweave 5000	Contour/Smudge	R10 S77	BLACK	BLACK	BLACK	BLACK	BLACK	BLACK
5% Sheerweave 5000	Linen/Pearl	R1014	WHITE	WHITE	WHITE	WHITE	WHITE	WHITE
5% Sheerweave 5000	Linen/Taupe	R1015	WHITE	WHITE	WHITE	WHITE	WHITE	WHITE*
5% Sheerweave 5000	Marble/Sand	R10 Q43	WHITE	WHITE	WHITE	WHITE	WHITE	WHITE
5% Sheerweave 5000	Metro /Platinum	R1019	WHITE	WHITE	WHITE	WHITE	WHITE	WHITE*
5% Sheerweave 5000	Pavestone	R1020	WHITE	WHITE	WHITE	WHITE	WHITE	WHITE*
5% Sheerweave 5000	Tweed/Buckeye	R1003	BLACK	BLACK	BLACK	BLACK	BLACK	BLACK
5% Sheerweave 5000	Tweed/Oatmeal	R1006	WHITE	WHITE	WHITE	WHITE	WHITE	WHITE
5% Sheerweave 5000	Twine/Flagstone	R1012	BLACK	BLACK	BLACK	BLACK	BLACK	BLACK
5% Sheerweave 5000	Twine/Metal	R1013	BLACK	BLACK	BLACK	BLACK	BLACK	BLACK
5% Sheerweave 5000	Twine/Oatmeal	R1011	WHITE	WHITE	WHITE	WHITE	WHITE	WHITE
5% Sheerweave 5000	Wicker/Mushroom	R10 Q51	BLACK	BLACK	BLACK	BLACK	BLACK	BLACK
7% Global Screen	Barley	RS14002	WHITE	WHITE	WHITE	WHITE	WHITE	WHITE
7% Global Screen	Canvas	RS14001	WHITE	WHITE	WHITE	WHITE	WHITE	WHITE
7% Global Screen	Platinum	RS14003	WHITE	WHITE	WHITE	WHITE	WHITE	WHITE
7% Sheerweave 5000	Bamboo White/Wheat	R3409	WHITE	WHITE	WHITE	WHITE	WHITE	WHITE
7% Sheerweave 5000	Bamboo/Wheat	R34 Q46	BLACK	BLACK	BLACK	BLACK	BLACK	BLACK
7% Sheerweave 5000	Linen/Clay	R3408	WHITE	WHITE	WHITE	WHITE	WHITE	WHITE
7% Sheerweave 5000	Twine/Jewel	R34 S73	WHITE	WHITE	WHITE	WHITE	WHITE	WHITE
10% E Screen	Charcoal/Charcoal	R1902	BLACK	BLACK	BLACK	BLACK	BLACK	BLACK
10% E Screen	Charcoal/Cocoa	R1907	BLACK	BLACK	BLACK	BLACK	BLACK	BLACK
10% E Screen	White Pearl	R1908	WHITE	WHITE	WHITE	WHITE	WHITE	WHITE
10% E Screen	White/Linen	R1905	WHITE	WHITE	WHITE	WHITE	WHITE	WHITE
10% E Screen	White/White	R1906	WHITE	WHITE	WHITE	WHITE	WHITE	WHITE
10% Sheerweave 2360	Beige	P2360 Q20	WHITE	WHITE	WHITE	WHITE	WHITE	WHITE
10% Sheerweave 2360	Beige/Pearl Gray	P2360 Q21	WHITE	WHITE	WHITE	WHITE	WHITE	WHITE
10% Sheerweave 2360	Charcoal	P2360 V21	BLACK	BLACK	BLACK	BLACK	BLACK	BLACK
10% Sheerweave 2360	Charcoal/Alpaca	P2360 V32	BLACK	BLACK	BLACK	BLACK	BLACK	BLACK
10% Sheerweave 2360	Charcoal/Chestnut	P2360 V24	BLACK	BLACK	BLACK	BLACK	BLACK	BLACK
10% Sheerweave 2360	Charcoal/Gray	P2360 V22	BLACK	BLACK	BLACK	BLACK	BLACK	BLACK
10% Sheerweave 2360	Oyster	P2360 P12	WHITE	WHITE	WHITE	WHITE	WHITE	WHITE
10% Sheerweave 2360	Oyster/Beige	P2360 P13	WHITE	WHITE	WHITE	WHITE	WHITE	WHITE
10% Sheerweave 2360	Oyster/Pearl Gray	P2360 P14	WHITE	WHITE	WHITE	WHITE	WHITE	WHITE
10% Sheerweave 2360	Pearl Gray	P2360 V20	WHITE	WHITE	WHITE	WHITE	WHITE	WHITE
10% Sheerweave 4100	Alabaster	P4100 U59	WHITE	WHITE	WHITE	WHITE	WHITE	WHITE
10% Sheerweave 4100	Ash	P4100 U64	BLACK	BLACK	BLACK	BLACK	BLACK	BLACK
10% Sheerweave 4100	Chalk	P4100 U58	WHITE	WHITE	WHITE	WHITE	WHITE	WHITE
10% Sheerweave 4100	Ebony	P4100 U65	BLACK	BLACK	BLACK	BLACK	BLACK	BLACK
10% Sheerweave 4100	Granite	P4100 U62	WHITE	WHITE	WHITE	WHITE	WHITE	WHITE
10% Sheerweave 4100	Greystone	P4100 U61	WHITE	WHITE	WHITE	WHITE	WHITE	WHITE
10% Sheerweave 4100	Pebblestone	P4100 U60	WHITE	WHITE	WHITE	WHITE	WHITE	WHITE
10% Sheerweave 4100	Pewter	P4100 U63	WHITE	WHITE	WHITE	WHITE	WHITE	WHITE
10% Sheerweave 4100	Tobacco	P4100 U66	BLACK	BLACK	BLACK	BLACK	BLACK	BLACK
10% Sheerweave 5000	Bamboo/Birch	R2603	WHITE	WHITE	WHITE	WHITE	WHITE	WHITE
10% Sheerweave 5000	Crepe/Toasted Coconut	R26 U16	WHITE	WHITE	WHITE	WHITE	WHITE	WHITE
10% Sheerweave 5000	Seaglass/Chardonnay	R26 U28	WHITE	WHITE	WHITE	WHITE	WHITE	WHITE
10% Sheerweave 5000	Seaglass/Crystal	R26 U29	WHITE	WHITE	WHITE	WHITE	WHITE	WHITE
10% Sheerweave 5000	Seaglass/Silver	R26 U24	BLACK	BLACK	BLACK	BLACK	BLACK	BLACK

* **STRONGLY RECOMMEND** Heat Sealed Hem as the Bottomrail option for bigger shades and for Sheerweave 5000 collections to improve appearance of the shade, and minimizing waviness.

The default color for the clutches, end plugs, plastic beaded chains, tensioners, and bottomrail for all patterns is either black or white as indicated above. Vanilla and bronze plastic beaded chains and tensioners are also available as an option, and must be specified at time of order. White and vanilla chains and tensioners will be coordinated to white clutches, end plugs, and bottomrails. Bronze and black chains and tensioners will be coordinated to black clutches, end plugs, and bottomrails.

Antique brass, nickel, oil rubbed & stainless steel chains will not have similar color coordinated component set, to ensure color coordinate as desired, please review colors under each clutch components.

NOTE: There are no pre-set default colors for cassette valances, fascia, or optional Deluxe bottomrails. These colors must be specified when ordering. Default trims not selected for Phifer screen patterns.

HARDWARE COLOR COORDINATION CHART

			Clutch Component Set				TouchLift Mounting Bar Component Set	
Material Name	Color Name	Color #	Beaded Chain & Tensioner	Clutch & End Plugs Universal Brackets	Fabric Wrapped Bottomrail	Bracket and/or Bracket Cover	Cordless Mounting Bar & Bracket	Fabric Wrapped Bottomrail
Alexandria	Charcoal	RD403	WHITE	WHITE	WHITE	WHITE	WHITE	WHITE
Alexandria	Duck Egg	RD402	WHITE	WHITE	WHITE	WHITE	WHITE	WHITE
Alexandria	Oatmeal	RD401	WHITE	WHITE	WHITE	WHITE	WHITE	WHITE
Astaire	Grey	RF42004	WHITE	WHITE	WHITE	WHITE	WHITE	WHITE
Astaire	Ivory	RF42002	WHITE	WHITE	WHITE	WHITE	WHITE	WHITE
Astaire	White	RF42001	WHITE	WHITE	WHITE	WHITE	WHITE	WHITE
Avila R Blackout	Canvas	RB703	WHITE	WHITE	N/A (Sealed Hem only)	WHITE	WHITE	N/A (Sealed Hem only)
Avila R Blackout	Chalk	RB702	WHITE	WHITE	N/A (Sealed Hem only)	WHITE	WHITE	N/A (Sealed Hem only)
Avila R Blackout	Charcoal	RB708	BLACK	BLACK	N/A (Sealed Hem only)	BLACK	BLACK	N/A (Sealed Hem only)
Avila R Blackout	Khaki	RB705	WHITE	WHITE	N/A (Sealed Hem only)	WHITE	WHITE	N/A (Sealed Hem only)
Avila R Blackout	Linen	RB704	WHITE	WHITE	N/A (Sealed Hem only)	WHITE	WHITE	N/A (Sealed Hem only)
Avila R Blackout	Marine	RB706	BLACK	BLACK	N/A (Sealed Hem only)	BLACK	BLACK	N/A (Sealed Hem only)
Avila R Blackout	Onyx	RB709	BLACK	BLACK	N/A (Sealed Hem only)	BLACK	BLACK	N/A (Sealed Hem only)
Avila R Blackout	Pewter	RB707	BLACK	BLACK	N/A (Sealed Hem only)	BLACK	BLACK	N/A (Sealed Hem only)
Avila R Blackout	White	RB701	WHITE	WHITE	N/A (Sealed Hem only)	WHITE	WHITE	N/A (Sealed Hem only)
Baroque	Champagne	RD501	WHITE	WHITE	WHITE	WHITE	WHITE	WHITE
Baroque	Cyan	RD502	BLACK	BLACK	BLACK	BLACK	BLACK	BLACK
Baroque	Ebony	RD504	BLACK	BLACK	BLACK	BLACK	BLACK	BLACK
Baroque	Ruby	RD503	BLACK	BLACK	BLACK	BLACK	BLACK	BLACK
Blackout - Solid	Alabaster	R4011	WHITE	WHITE	WHITE	WHITE	WHITE	WHITE
Blackout - Solid	Bone	R4005	WHITE	WHITE	WHITE	WHITE	WHITE	WHITE
Blackout - Solid	Buff	R4008	WHITE	WHITE	WHITE	WHITE	WHITE	WHITE
Blackout - Solid	Oyster	R4006	WHITE	WHITE	WHITE	WHITE	WHITE	WHITE
Blackout - Solid	White	R4001	WHITE	WHITE	WHITE	WHITE	WHITE	WHITE
Brilliance	Birch	RD802	WHITE	WHITE	WHITE	WHITE	WHITE	WHITE
Brilliance	Dove Gray	RD804	BLACK	BLACK	BLACK	BLACK	BLACK	BLACK
Brilliance	Pearl	RD801	WHITE	WHITE	WHITE	WHITE	WHITE	WHITE
Brilliance	Putty	RD803	WHITE	WHITE	WHITE	WHITE	WHITE	WHITE
Brilliance	Pyrite	RD805	BLACK	BLACK	BLACK	BLACK	BLACK	BLACK
Brilliance	Steel	RD806	BLACK	BLACK	BLACK	BLACK	BLACK	BLACK
Brilliance Blackout	Birch	RB602	WHITE	WHITE	WHITE	WHITE	WHITE	WHITE
Brilliance Blackout	Dove Gray	RB604	BLACK	BLACK	BLACK	BLACK	BLACK	BLACK
Brilliance Blackout	Pearl	RB601	WHITE	WHITE	WHITE	WHITE	WHITE	WHITE
Brilliance Blackout	Putty	RB603	WHITE	WHITE	WHITE	WHITE	WHITE	WHITE
Brilliance Blackout	Pyrite	RB605	BLACK	BLACK	BLACK	BLACK	BLACK	BLACK
Brilliance Blackout	Steel	RB606	BLACK	BLACK	BLACK	BLACK	BLACK	BLACK
Carrara	Coal	RD606	BLACK	BLACK	BLACK	BLACK	BLACK	BLACK
Carrara	Saddle	RD604	BLACK	BLACK	BLACK	BLACK	BLACK	BLACK
Carrara	Silver	RD603	WHITE	WHITE	WHITE	WHITE	WHITE	WHITE
Carrara	Storm	RD605	BLACK	BLACK	BLACK	BLACK	BLACK	BLACK
Carrara	Tusk	RD602	WHITE	WHITE	WHITE	WHITE	WHITE	WHITE
Carrara	White	RD601	WHITE	WHITE	WHITE	WHITE	WHITE	WHITE
Carrara Blackout	Coal	RB406	BLACK	BLACK	BLACK	BLACK	BLACK	BLACK
Carrara Blackout	Saddle	RB404	BLACK	BLACK	BLACK	BLACK	BLACK	BLACK
Carrara Blackout	Silver	RB403	WHITE	WHITE	WHITE	WHITE	WHITE	WHITE
Carrara Blackout	Storm	RB405	BLACK	BLACK	BLACK	BLACK	BLACK	BLACK
Carrara Blackout	Tusk	RB402	WHITE	WHITE	WHITE	WHITE	WHITE	WHITE
Carrara Blackout	White	RB401	WHITE	WHITE	WHITE	WHITE	WHITE	WHITE
Claudio	Ash	RD706	BLACK	BLACK	BLACK	BLACK	BLACK	BLACK
Claudio	Cloud	RD701	WHITE	WHITE	WHITE	WHITE	WHITE	WHITE
Claudio	Cream	RD702	WHITE	WHITE	WHITE	WHITE	WHITE	WHITE
Claudio	Gray Matters	RD708	BLACK	BLACK	BLACK	BLACK	BLACK	BLACK
Claudio	Mink	RD704	WHITE	WHITE	WHITE	WHITE	WHITE	WHITE
Claudio	Mist	RD703	WHITE	WHITE	WHITE	WHITE	WHITE	WHITE
Claudio	Reef	RD705	BLACK	BLACK	BLACK	BLACK	BLACK	BLACK
Claudio	Sailcloth	RD707	WHITE	WHITE	WHITE	WHITE	WHITE	WHITE

* **STRONGLY RECOMMEND** Heat Sealed Hem as the Bottomrail option for bigger shades and for Sheerweave 5000 collections to improve appearance of the shade, and minimizing waviness.

The default color for the clutches, end plugs, plastic beaded chains, tensioners, and bottomrail for all patterns is either black or white as indicated above. Vanilla and bronze plastic beaded chains and tensioners are also available as an option, and must be specified at time of order. White and vanilla chains and tensioners will be coordinated to white clutches, end plugs, and bottomrails. Bronze and black chains and tensioners will be coordinated to black clutches, end plugs, and bottomrails.

Antique brass, nickel, oil rubbed & stainless steel chains will not have similar color coordinated component set, to ensure color coordinate as desired, please review colors under each clutch components.

NOTE: There are no pre-set default colors for cassette valances, fascia, or optional Deluxe bottomrails. These colors must be specified when ordering. Default trims not selected for Phifer screen patterns.

HARDWARE COLOR COORDINATION CHART

			Clutch Component Set				TouchLift Mounting Bar Component Set	
Material Name	Color Name	Color #	Beaded Chain & Tensioner	Clutch & End Plugs Universal Brackets	Fabric Wrapped Bottomrail	Bracket and/or Bracket Cover	Cordless Mounting Bar & Bracket	Fabric Wrapped Bottomrail
Claudio Blackout	Ash	RB506	BLACK	BLACK	BLACK	BLACK	BLACK	BLACK
Claudio Blackout	Cloud	RB501	WHITE	WHITE	WHITE	WHITE	WHITE	WHITE
Claudio Blackout	Cream	RB502	WHITE	WHITE	WHITE	WHITE	WHITE	WHITE
Claudio Blackout	Mink	RB504	WHITE	WHITE	WHITE	WHITE	WHITE	WHITE
Claudio Blackout	Mist	RB503	WHITE	WHITE	WHITE	WHITE	WHITE	WHITE
Claudio Blackout	Reef	RB505	BLACK	BLACK	BLACK	BLACK	BLACK	BLACK
Cusco	Chateau	RF6400	WHITE	WHITE	WHITE	WHITE	WHITE	WHITE
Cusco	Coconut Husk	RF6401	BLACK	BLACK	BLACK	BLACK	BLACK	BLACK
Cusco	Shadow Ridge	RF6402	BLACK	BLACK	BLACK	BLACK	BLACK	BLACK
Darien	Bark	RD106	BLACK	BLACK	BLACK	BLACK	BLACK	BLACK
Darien	Beige	RD101	WHITE	WHITE	WHITE	WHITE	WHITE	WHITE
Darien	Charcoal	RD107	BLACK	BLACK	BLACK	BLACK	BLACK	BLACK
Darien	Driftwood	RD103	BLACK	BLACK	BLACK	BLACK	BLACK	BLACK
Darien	Mocha	RD104	BLACK	BLACK	BLACK	BLACK	BLACK	BLACK
Darien	Sand	RD102	BLACK	BLACK	BLACK	BLACK	BLACK	BLACK
Darien	Sea Mist	RD105	BLACK	BLACK	BLACK	BLACK	BLACK	BLACK
Drizzle	Flax	RD201	WHITE	WHITE	WHITE	WHITE	WHITE	WHITE
Drizzle	Graphite	RD205	BLACK	BLACK	BLACK	BLACK	BLACK	BLACK
Drizzle	Hessian	RD202	WHITE	WHTIE	WHITE	WHITE	WHITE	WHTIE
Drizzle	Iron	RD204	WHITE	WHITE	WHITE	WHITE	WHITE	WHITE
Drizzle	Tweed	RD203	BLACK	BLACK	BLACK	BLACK	BLACK	BLACK
Fiona	Grey	RD303	WHITE	WHITE	WHITE	WHITE	WHITE	WHITE
Fiona	Sand	RD301	WHITE	WHITE	WHITE	WHITE	WHITE	WHITE
Fiona	Smokey Blue	RD302	WHITE	WHITE	WHITE	WHITE	WHITE	WHITE
Flocke Blackout	Chartreux	R9205	WHITE	WHITE	WHITE	WHITE	WHITE	WHITE
Flocke Blackout	Crystal	R9204	WHITE	WHITE	WHITE	WHITE	WHITE	WHITE
Flocke Blackout	Sea Cliff	R9202	WHITE	WHITE	WHITE	WHITE	WHITE	WHITE
Flocke Blackout	Spun Silk	R9203	WHITE	WHITE	WHITE	WHITE	WHITE	WHITE
Hayworth	Linen	RF32001	WHITE	WHITE	WHITE	WHITE	WHITE	WHITE
Hayworth	White	RF32000	WHITE	WHITE	WHITE	WHITE	WHITE	WHITE
Illusion	Dove	RF34003	WHITE	WHITE	WHITE	WHITE	WHITE	WHITE
Illusion	Flannel	RF34004	BLACK	BLACK	BLACK	BLACK	BLACK	BLACK
Illusion	Ivory	RF34002	WHITE	WHITE	WHITE	WHITE	WHITE	WHITE
Illusion	Snow	RF34001	WHITE	WHITE	WHITE	WHITE	WHITE	WHITE
Jasper	Country Linen	RF5303	WHITE	WHITE	WHITE	WHITE	WHITE	WHITE
Jasper	Heather	RF5302	WHITE	WHITE	WHITE	WHITE	WHITE	WHITE
Jasper	Storm Cloud	RF5300	BLACK	BLACK	BLACK	BLACK	BLACK	BLACK
Jasper	Tweed	RF5301	BLACK	BLACK	BLACK	BLACK	BLACK	BLACK
Linview	Ash	R5613	WHITE	WHITE	WHITE	WHITE	WHITE	WHITE
Linview	Cabana Wood	R5603	WHITE	WHITE	WHITE	WHITE	WHITE	WHITE
Linview	Fog	R5611	WHITE	WHITE	WHITE	WHITE	WHITE	WHITE
Linview	Macadamia	R5606	WHITE	WHITE	WHITE	WHITE	WHITE	WHITE
Linview	Midnight Blck	R5615	BLACK	BLACK	BLACK	BLACK	BLACK	BLACK
Linview	Morning Light	R5602	WHITE	WHITE	WHITE	WHITE	WHITE	WHITE
Linview	Navy	R5610	BLACK	BLACK	BLACK	BLACK	BLACK	BLACK
Linview	New York Grey	R5614	BLACK	BLACK	BLACK	BLACK	BLACK	BLACK
Linview	Pale Lapis	R5609	BLACK	BLACK	BLACK	BLACK	BLACK	BLACK
Linview	Pale Oak	R5617	WHITE	WHITE	WHITE	WHITE	WHITE	WHITE
Linview	Porpoise	R5612	WHITE	WHITE	WHITE	WHITE	WHITE	WHITE
Linview	Rural Green	R5607	WHITE	WHITE	WHITE	WHITE	WHITE	WHITE
Linview	Sea Smoke	R5616	WHITE	WHITE	WHITE	WHITE	WHITE	WHITE
Linview	Skyward	R5608	WHITE	WHITE	WHITE	WHITE	WHITE	WHITE
Linview	Slate	R5605	BLACK	BLACK	BLACK	BLACK	BLACK	BLACK
Linview	Soft Linen	R5618	WHITE	WHITE	WHITE	WHITE	WHITE	WHITE
Linview	Summer White	R5601	WHITE	WHITE	WHITE	WHITE	WHITE	WHITE
Linview	Weathered Walnut	R5604	WHITE	WHITE	WHITE	WHITE	WHITE	WHITE

* **STRONGLY RECOMMEND** Heat Sealed Hem as the Bottomrail option for bigger shades and for Sheerweave 5000 collections to improve appearance of the shade, and minimizing waviness.

The default color for the clutches, end plugs, plastic beaded chains, tensioners, and bottomrail for all patterns is either black or white as indicated above. Vanilla and bronze plastic beaded chains and tensioners are also available as an option, and must be specified at time of order. White and vanilla chains and tensioners will be coordinated to white clutches, end plugs, and bottomrails. Bronze and black chains and tensioners will be coordinated to black clutches, end plugs, and bottomrails.

Antique brass, nickel, oil rubbed & stainless steel chains will not have similar color coordinated component set, to ensure color coordinate as desired, please review colors under each clutch components.

NOTE: There are no pre-set default colors for cassette valances, fascia, or optional Deluxe bottomrails. These colors must be specified when ordering. Default trims not selected for Phifer screen patterns.

HARDWARE COLOR COORDINATION CHART

			Clutch Component Set				TouchLift Mounting Bar Component Set	
Material Name	**Color Name**	**Color #**	**Beaded Chain & Tensioner**	**Clutch & End Plugs Universal Brackets**	**Fabric Wrapped Bottomrail**	**Bracket and/or Bracket Cover**	**Cordless Mounting Bar & Bracket**	**Fabric Wrapped Bottomrail**
Linview Blackout	Alabaster	RB302	WHITE	WHITE	N/A (Sealed Hem only)	WHITE	WHITE	N/A (Sealed Hem only)
Linview Blackout	Café Crème	RB303	WHITE	WHITE	N/A (Sealed Hem only)	WHITE	WHITE	N/A (Sealed Hem only)
Linview Blackout	Collonade Gray	RB306	BLACK	BLACK	N/A (Sealed Hem only)	BLACK	BLACK	N/A (Sealed Hem only)
Linview Blackout	Gauntlet Gray	RB309	WHITE	WHITE	N/A (Sealed Hem only)	WHITE	WHITE	N/A (Sealed Hem only)
Linview Blackout	Pale Gray	RB307	WHITE	WHITE	N/A (Sealed Hem only)	WHITE	WHITE	N/A (Sealed Hem only)
Linview Blackout	Pale Oak	RB311	WHITE	WHITE	N/A (Heat sealed only)	WHITE	WHITE	N/A (Heat sealed only)
Linview Blackout	Pure White	RB301	WHITE	WHITE	N/A (Sealed Hem only)	WHITE	WHITE	N/A (Sealed Hem only)
Linview Blackout	Sea Smoke	RB310	WHITE	WHITE	N/A (Heat sealed only)	WHITE	WHITE	N/A (Heat sealed only)
Linview Blackout	Soft Linen	RB312	WHITE	WHITE	N/A (Heat sealed only)	WHITE	WHITE	N/A (Heat sealed only)
Linview Blackout	Stone	RB304	WHITE	WHITE	N/A (Sealed Hem only)	WHITE	WHITE	N/A (Sealed Hem only)
Linview Blackout	Tranquility	RB305	BLACK	BLACK	N/A (Sealed Hem only)	BLACK	BLACK	N/A (Sealed Hem only)
Linview Blackout	Whale	RB308	BLACK	BLACK	N/A (Sealed Hem only)	BLACK	BLACK	N/A (Sealed Hem only)
Montero	Dark Walnut	RF4200	BLACK	BLACK	BLACK	BLACK	BLACK	BLACK
Montero	Java Coast	RF4201	BLACK	BLACK	BLACK	BLACK	BLACK	BLACK
Montero	Wicker Basket	RF4202	WHITE	WHITE	WHITE	WHITE	WHITE	WHITE
Moravia	Coastal	RF8602	WHITE	WHITE	WHITE	WHITE	WHITE	WHITE
Moravia	Countryside	RF8600	BLACK	BLACK	BLACK	BLACK	BLACK	BLACK
Moravia	Seabreeze	RF8601	WHITE	WHITE	WHITE	WHITE	WHITE	WHITE
Santa Cruz	Bunglehouse Blue	RF3101	BLACK	BLACK	BLACK	BLACK	BLACK	BLACK
Santa Cruz	Manchester	RF3100	WHITE	WHITE	WHITE	WHITE	WHITE	WHITE
Santa Cruz	Night Sky	RF3106	BLACK	BLACK	BLACK	BLACK	BLACK	BLACK
Santa Cruz	Rainforest	RF3107	BLACK	BLACK	BLACK	BLACK	BLACK	BLACK
Santa Cruz Blackout	Bunglehouse Blue	RB102	BLACK	BLACK	BLACK	BLACK	BLACK	BLACK
Santa Cruz Blackout	Manchester	RB101	WHITE	WHITE	WHITE	WHITE	WHITE	WHITE
Santa Cruz Blackout	Night Sky	RB104	BLACK	BLACK	BLACK	BLACK	BLACK	BLACK
Santa Cruz Blackout	Rainforest	RB103	BLACK	BLACK	BLACK	BLACK	BLACK	BLACK
Scala Blackout	Gray	R10005	WHITE	WHITE	N/A (Sealed Hem only)	WHITE	WHITE	N/A (Sealed Hem only)
Scala Blackout	Off White	R10002	WHITE	WHITE	N/A (Sealed Hem only)	WHITE	WHITE	N/A (Sealed Hem only)
Scala Blackout	Silver	R10004	WHITE	WHITE	N/A (Sealed Hem only)	WHITE	WHITE	N/A (Sealed Hem only)
Scala Blackout	White	R10001	WHITE	WHITE	N/A (Sealed Hem only)	WHITE	WHITE	N/A (Sealed Hem only)
Sheerweave 7200R	Blazer	P7200R RB7	BLACK	BLACK	N/A (Heat sealed only)	BLACK	BLACK	N/A (Heat sealed only)
Sheerweave 7200R	Chiffon	P7200R RB4	WHITE	WHITE	N/A (Heat sealed only)	WHITE	WHITE	N/A (Heat sealed only)
Sheerweave 7200R	Chrome	P7200R RB5	WHITE	WHITE	N/A (Heat sealed only)	WHITE	WHITE	N/A (Heat sealed only)
Sheerweave 7200R	Earl Grey	P7200R RB6	WHITE	WHITE	N/A (Heat sealed only)	WHITE	WHITE	N/A (Heat sealed only)
Sheerweave 7200R	Oyster	P7200R RB2	WHITE	WHITE	N/A (Heat sealed only)	WHITE	WHITE	N/A (Heat sealed only)
Sheerweave 7200R	Raven	P7200R RB8	BLACK	BLACK	N/A (Heat sealed only)	BLACK	BLACK	N/A (Heat sealed only)
Sheerweave 7200R	Sail	P7200R RB3	WHITE	WHITE	N/A (Heat sealed only)	WHITE	WHITE	N/A (Heat sealed only)
Sheerweave 7200R	Swan	P7200R RB1	WHITE	WHITE	N/A (Heat sealed only)	WHITE	WHITE	N/A (Heat sealed only)
Sheerweave 7250R	Blazer	P7250R RL7	BLACK	BLACK	N/A (Heat sealed only)	BLACK	BLACK	N/A (Heat sealed only)
Sheerweave 7250R	Chiffon	P7250R RL4	WHITE	WHITE	N/A (Heat sealed only)	WHITE	WHITE	N/A (Heat sealed only)
Sheerweave 7250R	Chrome	P7250R RL5	WHITE	WHITE	N/A (Heat sealed only)	WHITE	WHITE	N/A (Heat sealed only)
Sheerweave 7250R	Earl Grey	P7250R RL6	WHITE	WHITE	N/A (Heat sealed only)	WHITE	WHITE	N/A (Heat sealed only)
Sheerweave 7250R	Oyster	P7250R RL2	WHITE	WHITE	N/A (Heat sealed only)	WHITE	WHITE	N/A (Heat sealed only)
Sheerweave 7250R	Raven	P7250R RL8	BLACK	BLACK	N/A (Heat sealed only)	BLACK	BLACK	N/A (Heat sealed only)
Sheerweave 7250R	Sail	P7250R RL3	WHITE	WHITE	N/A (Heat sealed only)	WHITE	WHITE	N/A (Heat sealed only)
Sheerweave 7250R	Swan	P7250R RL1	WHITE	WHITE	N/A (Heat sealed only)	WHITE	WHITE	N/A (Heat sealed only)
Sheerweave 7400	Cotton	P7400 U80	WHITE	WHITE	WHITE	WHITE	WHITE	WHITE
Sheerweave 7400	Flint	P7400 U87	BLACK	BLACK	BLACK	BLACK	BLACK	BLACK
Sheerweave 7400	Parchment	P7400 U81	WHITE	WHITE	WHITE	WHITE	WHITE	WHITE
Sheerweave 7400	Pebble	P7400 U83	WHITE	WHITE	WHITE	WHITE	WHITE	WHITE
Sheerweave 7400	Seagrass	P7400 U84	BLACK	BLACK	BLACK	BLACK	BLACK	BLACK
Sheerweave 7400	Sesame	P7400 U82	BLACK	BLACK	BLACK	BLACK	BLACK	BLACK
Sheerweave 7400	Shale	P7400 U85	BLACK	BLACK	BLACK	BLACK	BLACK	BLACK
Sheerweave 7400	Spice	P7400 U86	BLACK	BLACK	BLACK	BLACK	BLACK	BLACK
Sheerweave 7450	Cotton	P7450 U80	WHITE	WHITE	WHITE	WHITE	WHITE	WHITE
Sheerweave 7450	Flint	P7450 U87	BLACK	BLACK	BLACK	BLACK	BLACK	BLACK
Sheerweave 7450	Parchment	P7450 U81	WHITE	WHITE	WHITE	WHITE	WHITE	WHITE
Sheerweave 7450	Pebble	P7450 U83	WHITE	WHITE	WHITE	WHITE	WHITE	WHITE
Sheerweave 7450	Seagrass	P7450 U84	BLACK	BLACK	BLACK	BLACK	BLACK	BLACK
Sheerweave 7450	Sesame	P7450 U82	BLACK	BLACK	BLACK	BLACK	BLACK	BLACK
Sheerweave 7450	Shale	P7450 U85	BLACK	BLACK	BLACK	BLACK	BLACK	BLACK
Sheerweave 7450	Spice	P7450 U86	BLACK	BLACK	BLACK	BLACK	BLACK	BLACK

* **STRONGLY RECOMMEND** Heat Sealed Hem as the Bottomrail option for bigger shades and for Sheerweave 5000 collections to improve appearance of the shade, and minimizing waviness.

The default color for the clutches, end plugs, plastic beaded chains, tensioners, and bottomrail for all patterns is either black or white as indicated above. Vanilla and bronze plastic beaded chains and tensioners are also available as an option, and must be specified at time of order. White and vanilla chains and tensioners will be coordinated to white clutches, end plugs, and bottomrails. Bronze and black chains and tensioners will be coordinated to black clutches, end plugs, and bottomrails.

Antique brass, nickel, oil rubbed & stainless steel chains will not have similar color coordinated component set, to ensure color coordinate as desired, please review colors under each clutch components.

NOTE: There are no pre-set default colors for cassette valances, fascia, or optional Deluxe bottomrails. These colors must be specified when ordering. Default trims not selected for Phifer screen patterns.

HARDWARE COLOR COORDINATION CHART

			Clutch Component Set				TouchLift Mounting Bar Component Set	
Material Name	Color Name	Color #	Beaded Chain & Tensioner	Clutch & End Plugs Universal Brackets	Fabric Wrapped Bottomrail	Bracket and/or Bracket Cover	Cordless Mounting Bar & Bracket	Fabric Wrapped Bottomrail
Sheerweave 7500	Cloud	P7500 R39	WHITE	WHITE	N/A (Heat sealed only)	WHITE	WHITE	N/A (Heat sealed only)
Sheerweave 7500	Dune	P7500 R17	WHITE	WHITE	N/A (Heat sealed only)	WHITE	WHITE	N/A (Heat sealed only)
Sheerweave 7500	Ice	P7500 R13	WHITE	WHITE	N/A (Heat sealed only)	WHITE	WHITE	N/A (Heat sealed only)
Sheerweave 7500	Limestone	P7500 R41	WHITE	WHITE	N/A (Heat sealed only)	WHITE	WHITE	N/A (Heat sealed only)
Sheerweave 7500	Midnight	P7500 R22	BLACK	BLACK	N/A (Heat sealed only)	BLACK	BLACK	N/A (Heat sealed only)
Sheerweave 7500	Midnightx2	P7500 R99	BLACK	BLACK	N/A (Heat sealed only)	BLACK	BLACK	N/A (Heat sealed only)
Sheerweave 7500	Mist	P7500 R97	WHITE	WHITE	N/A (Heat sealed only)	WHITE	WHITE	N/A (Heat sealed only)
Sheerweave 7500	Nimbus	P7500 R42	WHITE	WHITE	N/A (Heat sealed only)	WHITE	WHITE	N/A (Heat sealed only)
Sheerweave 7500	Odyssey	P7500 R20	BLACK	BLACK	N/A (Heat sealed only)	BLACK	BLACK	N/A (Heat sealed only)
Sheerweave 7500	Orient	P7500 R21	BLACK	BLACK	N/A (Heat sealed only)	BLACK	BLACK	N/A (Heat sealed only)
Sheerweave 7500	Orientx2	P7500 S97	BLACK	BLACK	N/A (Heat sealed only)	BLACK	BLACK	N/A (Heat sealed only)
Sheerweave 7500	Porcelain	P7500 R40	WHITE	WHITE	N/A (Heat sealed only)	WHITE	WHITE	N/A (Heat sealed only)
Sheerweave 7500	Stone	P7500 R19	BLACK	BLACK	N/A (Heat sealed only)	BLACK	BLACK	N/A (Heat sealed only)
Sheerweave 7500	Tundra	P7500 R43	WHITE	WHITE	N/A (Heat sealed only)	WHITE	WHITE	N/A (Heat sealed only)
Sheerweave 7500R	Cloud	P7500R R45	WHITE	WHITE	N/A (Heat sealed only)	WHITE	WHITE	N/A (Heat sealed only)
Sheerweave 7500R	Dune	P7500R R51	WHITE	WHITE	N/A (Heat sealed only)	WHITE	WHITE	N/A (Heat sealed only)
Sheerweave 7500R	Ice	P7500R R44	WHITE	WHITE	N/A (Heat sealed only)	WHITE	WHITE	N/A (Heat sealed only)
Sheerweave 7500R	Limestone	P7500R R47	WHITE	WHITE	N/A (Heat sealed only)	WHITE	WHITE	N/A (Heat sealed only)
Sheerweave 7500R	Midnight	P7500R R55	BLACK	BLACK	N/A (Heat sealed only)	BLACK	BLACK	N/A (Heat sealed only)
Sheerweave 7500R	Mist	P7500R R48	WHITE	WHITE	N/A (Heat sealed only)	WHITE	WHITE	N/A (Heat sealed only)
Sheerweave 7500R	Nimbus	P7500R R49	WHITE	WHITE	N/A (Heat sealed only)	WHITE	WHITE	N/A (Heat sealed only)
Sheerweave 7500R	Odyssey	P7500R R53	BLACK	BLACK	N/A (Heat sealed only)	BLACK	BLACK	N/A (Heat sealed only)
Sheerweave 7500R	Orient	P7500R R54	BLACK	BLACK	N/A (Heat sealed only)	BLACK	BLACK	N/A (Heat sealed only)
Sheerweave 7500R	Porcelain	P7500R R46	WHITE	WHITE	N/A (Heat sealed only)	WHITE	WHITE	N/A (Heat sealed only)
Sheerweave 7500R	Stone	P7500R R52	BLACK	BLACK	N/A (Heat sealed only)	BLACK	BLACK	N/A (Heat sealed only)
Sheerweave 7500R	Tundra	P7500R R50	WHITE	WHITE	N/A (Heat sealed only)	WHITE	WHITE	N/A (Heat sealed only)
Sheerweave 7600	Bright White	P7600 U90	WHITE	WHITE	WHITE	WHITE	WHITE	WHITE
Sheerweave 7600	Coal	P7600 U97	BLACK	BLACK	BLACK	BLACK	BLACK	BLACK
Sheerweave 7600	Coffee	P7600 U96	BLACK	BLACK	BLACK	BLACK	BLACK	BLACK
Sheerweave 7600	Dove Grey	P7600 U93	WHITE	WHITE	WHITE	WHITE	WHITE	WHITE
Sheerweave 7600	Ivory	P7600 U99	WHITE	WHITE	WHITE	WHITE	WHITE	WHITE
Sheerweave 7600	Khaki	P7600 U92	WHITE	WHITE	WHITE	WHITE	WHITE	WHITE
Sheerweave 7600	Shell	P7600 U91	WHITE	WHITE	WHITE	WHITE	WHITE	WHITE
Sheerweave 7600	Taupe	P7600 U94	WHITE	WHITE	WHITE	WHITE	WHITE	WHITE
Sheerweave 7600	Thunder	P7600 U95	BLACK	BLACK	BLACK	BLACK	BLACK	BLACK
Sheerweave 7650	Bright White	P7650 U90	WHITE	WHITE	WHITE	WHITE	WHITE	WHITE
Sheerweave 7650	Coal	P7650 U97	BLACK	BLACK	BLACK	BLACK	BLACK	BLACK
Sheerweave 7650	Coffee	P7650 U96	BLACK	BLACK	BLACK	BLACK	BLACK	BLACK
Sheerweave 7650	Dove Grey	P7650 U93	WHITE	WHITE	WHITE	WHITE	WHITE	WHITE
Sheerweave 7650	Ivory	P7650 U99	WHITE	WHITE	WHITE	WHITE	WHITE	WHITE
Sheerweave 7650	Khaki	P7650 U92	WHITE	WHITE	WHITE	WHITE	WHITE	WHITE
Sheerweave 7650	Shell	P7650 U91	WHITE	WHITE	WHITE	WHITE	WHITE	WHITE
Sheerweave 7650	Taupe	P7650 U94	WHITE	WHITE	WHITE	WHITE	WHITE	WHITE
Sheerweave 7650	Thunder	P7650 U95	BLACK	BLACK	BLACK	BLACK	BLACK	BLACK
Sheerweave 7700R	Chalk	P7700R TB4	WHITE	WHITE	WHITE	WHITE	WHITE	WHITE
Sheerweave 7700R	Concrete	P7700R TB3	WHITE	WHITE	WHITE	WHITE	WHITE	WHITE
Sheerweave 7700R	Crystal	P7700R TB1	WHITE	WHITE	WHITE	WHITE	WHITE	WHITE
Sheerweave 7700R	Graphite	P7700R TB5	BLACK	BLACK	BLACK	BLACK	BLACK	BLACK
Sheerweave 7700R	Onyx	P7700R TB7	BLACK	BLACK	BLACK	BLACK	BLACK	BLACK
Sheerweave 7700R	Pewter	P7700R TB6	BLACK	BLACK	BLACK	BLACK	BLACK	BLACK
Sheerweave 7700R	Sand	P7700R TB2	WHITE	WHITE	WHITE	WHITE	WHITE	WHITE
Sheerweave 7750R	Chalk	P7750R TL4	WHITE	WHITE	N/A (Heat sealed only)	WHITE	WHITE	N/A (Heat sealed only)
Sheerweave 7750R	Concrete	P7750R TL3	WHITE	WHITE	N/A (Heat sealed only)	WHITE	WHITE	N/A (Heat sealed only)
Sheerweave 7750R	Crystal	P7750R TL1	WHITE	WHITE	N/A (Heat sealed only)	WHITE	WHITE	N/A (Heat sealed only)
Sheerweave 7750R	Graphite	P7750R TL5	BLACK	BLACK	N/A (Heat sealed only)	BLACK	BLACK	N/A (Heat sealed only)
Sheerweave 7750R	Onyx	P7750R TL7	BLACK	BLACK	N/A (Heat sealed only)	BLACK	BLACK	N/A (Heat sealed only)
Sheerweave 7750R	Pewter	P7750R TL6	BLACK	BLACK	N/A (Heat sealed only)	BLACK	BLACK	N/A (Heat sealed only)
Sheerweave 7750R	Sand	P7750R TL2	WHITE	WHITE	N/A (Heat sealed only)	WHITE	WHITE	N/A (Heat sealed only)
Sorrento	Bisque	RF35002	WHITE	WHITE	WHITE	WHITE	WHITE	WHITE
Sorrento	Linen	RF35001	WHITE	WHITE	WHITE	WHITE	WHITE	WHITE
Sorrento	Stucco	RF35003	WHITE	WHITE	WHITE	WHITE	WHITE	WHITE

* **STRONGLY RECOMMEND** Heat Sealed Hem as the Bottomrail option for bigger shades and for Sheerweave 5000 collections to improve appearance of the shade, and minimizing waviness.

The default color for the clutches, end plugs, plastic beaded chains, tensioners, and bottomrail for all patterns is either black or white as indicated above. Vanilla and bronze plastic beaded chains and tensioners are also available as an option, and must be specified at time of order. White and vanilla chains and tensioners will be coordinated to white clutches, end plugs, and bottomrails. Bronze and black chains and tensioners will be coordinated to black clutches, end plugs, and bottomrails.

Antique brass, nickel, oil rubbed & stainless steel chains will not have similar color coordinated component set, to ensure color coordinate as desired, please review colors under each clutch components.

NOTE: There are no pre-set default colors for cassette valances, fascia, or optional Deluxe bottomrails. These colors must be specified when ordering. Default trims not selected for Phifer screen patterns.

HARDWARE COLOR COORDINATION CHART

			Clutch Component Set				TouchLift Mounting Bar Component Set	
Material Name	**Color Name**	**Color #**	**Beaded Chain & Tensioner**	**Clutch & End Plugs Universal Brackets**	**Fabric Wrapped Bottomrail**	**Bracket and/or Bracket Cover**	**Cordless Mounting Bar & Bracket**	**Fabric Wrapped Bottomrail**
Sunscreen (SW) 7000	Canvas	R11 U67	WHITE	WHITE	WHITE	WHITE	WHITE	WHITE
Sunscreen (SW) 7000	Canyon	R11 V41	WHITE	WHITE	WHITE	WHITE	WHITE	WHITE
Sunscreen (SW) 7000	Cocoa	R11 U69	BLACK	BLACK	BLACK	BLACK	BLACK	BLACK
Sunscreen (SW) 7000	Wheat	R11 Q57	WHITE	WHITE	WHITE	WHITE	WHITE	WHITE
Sunscreen (SW) 7000	Birch	R1101	WHITE	WHITE	WHITE	WHITE	WHITE	WHITE
Sunscreen (SW) 7000	Graphite	R1107	BLACK	BLACK	BLACK	BLACK	BLACK	BLACK
Sunscreen (SW) 7000	Mushroom	R1102	BLACK	BLACK	BLACK	BLACK	BLACK	BLACK
Sunscreen (SW) 7000	Onyx	R1103	BLACK	BLACK	BLACK	BLACK	BLACK	BLACK
Sunscreen (SW) 7000	Sand	R1104	WHITE	WHITE	WHITE	WHITE	WHITE	WHITE
Sunscreen (SW) 7000	White	R1106	WHITE	WHITE	WHITE	WHITE	WHITE	WHITE
Tundra	Antique White	RD9 02	WHITE	WHITE	N/A (Heat sealed only)	WHITE	WHITE	N/A (Heat sealed only)
Tundra	Dark Gray	RD9 05	BLACK	BLACK	N/A (Heat sealed only)	BLACK	BLACK	N/A (Heat sealed only)
Tundra	Ice White	RD9 01	WHITE	WHITE	N/A (Heat sealed only)	WHITE	WHITE	N/A (Heat sealed only)
Tundra	Oxford Jean	RD9 06	BLACK	BLACK	N/A (Heat sealed only)	BLACK	BLACK	N/A (Heat sealed only)
Tundra	Sand	RD9 03	WHITE	WHITE	N/A (Heat sealed only)	WHITE	WHITE	N/A (Heat sealed only)
Tundra	Whale	RD9 04	BLACK	BLACK	N/A (Heat sealed only)	BLACK	BLACK	N/A (Heat sealed only)
Tundra Blackout	Dark Gray	RB8 05	BLACK	BLACK	N/A (Heat sealed only)	BLACK	BLACK	N/A (Heat sealed only)
Tundra Blackout	Ivory	RB8 02	WHITE	WHITE	N/A (Heat sealed only)	WHITE	WHITE	N/A (Heat sealed only)
Tundra Blackout	Oxford Jean	RB8 06	BLACK	BLACK	N/A (Heat sealed only)	BLACK	BLACK	N/A (Heat sealed only)
Tundra Blackout	Sand	RB8 03	WHITE	WHITE	N/A (Heat sealed only)	WHITE	WHITE	N/A (Heat sealed only)
Tundra Blackout	Whale	RB8 04	BLACK	BLACK	N/A (Heat sealed only)	BLACK	BLACK	N/A (Heat sealed only)
Tundra Blackout	White	RB8 01	WHITE	WHITE	N/A (Heat sealed only)	WHITE	WHITE	N/A (Heat sealed only)
Uptown	Sterling	R7902	WHITE	WHITE	WHITE	WHITE	WHITE	WHITE
Uptown	Sterling Room Darkening	R7901	WHITE	WHITE	WHITE	WHITE	WHITE	WHITE
World Textures 1	Cyprus Coast	R4802	WHITE	WHITE	WHITE	WHITE	WHITE	WHITE
World Textures 1	Medina Mirage	R4803	WHITE	WHITE	WHITE	WHITE	WHITE	WHITE
World Textures 1	Medina Vision	R4806	WHITE	WHITE	WHITE	WHITE	WHITE	WHITE
World Textures 1 Blackout	Cypress Formal	R5001	WHITE	WHITE	WHITE	WHITE	WHITE	WHITE
World Textures 2	Oslo Blend	R4902	WHITE	WHITE	WHITE	WHITE	WHITE	WHITE
World Textures 2 Blackout	Oslo Terrain	R5004	WHITE	WHITE	WHITE	WHITE	WHITE	WHITE

* **STRONGLY RECOMMEND** Heat Sealed Hem as the Bottomrail option for bigger shades and for Sheerweave 5000 collections to improve appearance of the shade, and minimizing waviness.

The default color for the clutches, end plugs, plastic beaded chains, tensioners, and bottomrail for all patterns is either black or white as indicated above. Vanilla and bronze plastic beaded chains and tensioners are also available as an option, and must be specified at time of order. White and vanilla chains and tensioners will be coordinated to white clutches, end plugs, and bottomrails. Bronze and black chains and tensioners will be coordinated to black clutches, end plugs, and bottomrails.

Antique brass, nickel, oil rubbed & stainless steel chains will not have similar color coordinated component set, to ensure color coordinate as desired, please review colors under each clutch components.

NOTE: There are no pre-set default colors for cassette valances, fascia, or optional Deluxe bottomrails. These colors must be specified when ordering. Default trims not selected for Phifer screen patterns.

The following pages contain solar optical information by pattern and color, it is important to understand the numbers and how they work best to your advantage.

OPENNESS FACTOR (OF):

OF is a property that is often used to describe a screen material. The definition of OF is the percentage of the screen's surface area that is “open". The OF only describes one of the factors that regulates the amount of light passing through a roller shade. Blackout provides the most privacy, followed by 1%, Translucent, then 3%. Increasingly, 5%, 10%, then Transparent provide the least amount of privacy.

The OF and color coating will together decide how open the (shade) material will become. Different material colors absorb light differently. For example, a dark colored car is hotter than a light colored car on a sunny summer day.

Sunlight that hits the shade surface is divided into three parts that together make 100 % of the incoming light. The picture below illustrates the phenomenon.

TRANSMISSION: One part of the light will pass through the shade, and that is the part of the light that comes into the room. *The lower the number, the better.*

The transmission value tells how much light passes through the fabric. The transmission is dependent on three factors;
- the openness factor of the fabric
- the color of the fabric
- the coating on the fabric.

REFLECTION: One part of the light will be reflected when it hits the shade. *The higher the number, the better.*

ABSORPTION: The rest of the light will be absorbed by the shade. *The lower the number, the better.*

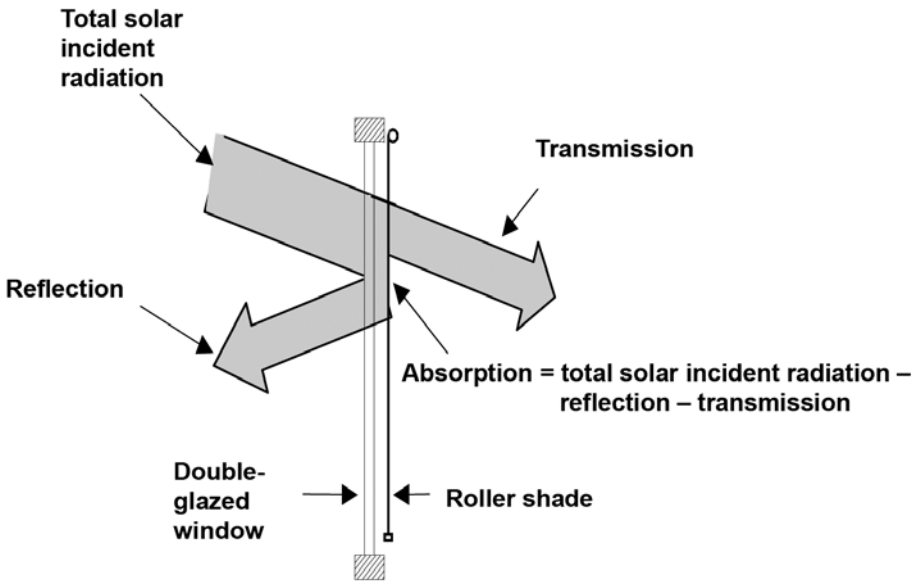

UV PROTECTION (and Blackout Fabrics): The total solar incident radiation of wavelengths between 280 nm and 2500 nm is measured and optical values are reported. UV-light is included in these wavelengths. For those of our fabrics that are Blackout the transmission of light is 0 %. This signifies 100 % blocking of all sunlight, including UV-light. The UV-protection is 100 % for the fabric. In order to get complete blocking of the light the fabric has to be fitted so that no light is transmitted on the sides of the fabric. *The higher the number, the better.*

SOLAR OPTICAL CHART

Material Name	Color Name	Color #	Openness Factor*	Transmission*	Reflection*	Absorption*	UV Rating*
1% E Screen	Charcoal/Charcoal	R8009	1%	1	4	95	99%
1% E Screen	Charcoal/Cocoa	R8007	1%	2	5	93	99%
1% E Screen	Charcoal/Grey	R8008	1%	3	9	88	99%
1% E Screen	White	R8004	1%	14	75	11	99%
1% E Screen	White/Linen	R8005	1%	14	66	20	99%
1% E Screen	White/Pearl	R8003	1%	9	58	33	99%
1% Sheerweave 2500	Beige	R01 Q20	1%	7	50	43	99%
1% Sheerweave 2500	Beige/Pearl Gray	R01 Q21	1%	5	42	53	99%
1% Sheerweave 2500	Charcoal	R0103	1%	2	8	90	99%
1% Sheerweave 2500	Charcoal/Alpaca	R0109	1%	1	16	83	99%
1% Sheerweave 2500	Charcoal/Chestnut	R0104	1%	1	6	93	99%
1% Sheerweave 2500	Charcoal/Gray	R01 V22	1%	2	8	90	99%
1% Sheerweave 2500	Oyster	R0105	1%	15	68	17	99%
1% Sheerweave 2500	Oyster/Beige	R0106	1%	10	60	30	99%
1% Sheerweave 2500	Oyster/Pearl Gray	R0107	1%	7	50	43	99%
1% Sheerweave 2500	Pearl Gray	R01 V20	1%	3	32	65	99%
1% Sheerweave 2701	Charcoal	RS21 V21	1%	3	4	93	99%
1% Sheerweave 2701	Charcoal/Brown	RS21 V66	1%	4	17	78	99%
1% Sheerweave 2701	Charcoal/Gray	RS21 V22	1%	3	14	83	99%
1% Sheerweave 2701	Charcoal/Slate	RS21 V64	1%	4	30	66	99%
1% Sheerweave 2701	Charcoal/Taupe	RS21 V65	1%	4	25	71	99%
1% Sheerweave 2701	Oyster	RS2101	1%	21	64	15	99%
1% Sheerweave 2701	Oyster/Beige	RS2102	1%	15	57	28	99%
1% Sheerweave 2701	Oyster/Charcoal	RS2106	1%	6	41	53	99%
1% Sheerweave 2701	Oyster/Chestnut	RS2105	1%	6	41	53	99%
1% Sheerweave 2701	Oyster/Pearl Gray	RS2103	1%	8	54	38	99%
1% Sheerweave 2701	Oyster/Pewter	RS2104	1%	6	43	51	99%
1% Sheerweave 4901	Birch	P4901 Q25	1%	5	57	38	99%
1% Sheerweave 4901	Chalk	P4901 P06	1%	9	83	8	99%
1% Sheerweave 4901	Chalk/Black	P4901 P25	1%	1	22	77	99%
1% Sheerweave 4901	Chalk/Wheat	P4901 P26	1%	6	65	29	99%
1% Sheerweave 4901	Cobblestone	P4901 Q26	1%	3	36	61	99%
1% Sheerweave 4901	Ebony	P4901 V10	1%	1	5	94	99%
1% Sheerweave 4901	Flaxen	P4901 Q22	1%	3	42	55	99%
1% Sheerweave 4901	Kettal Grey	P4901 Q07	1%	3	48	49	99%
1% Sheerweave 4901	Pewter/Chalk	P4901 V03	1%	3	56	41	99%
1% Sheerweave 4901	Slate	P4901 V28	1%	2	11	87	99%
1% Sheerweave 4901	Soft Grey	P4901 Q27	1%	5	58	37	99%
1% Sheerweave 4901	Tobacco	P4901 Q16	1%	3	42	55	99%
1% Sheerweave 4901	Whitesands	P4901 Q23	1%	7	65	28	99%
1% Sheerweave 5000	Jute/Coffee	P5001 R88	1%	5	15	80	99%
1% Sheerweave 5000	Jute/Flax	P5001 R86	1%	30	56	14	99%
1% Sheerweave 5000	Jute/Latte	P5001 R87	1%	24	50	26	99%
1% Sheerweave 5000	Jute/Parchment	P5001 R85	1%	13	70	17	99%
1% Toka	Bone	RS11002	1%	16	59	25	99%
1% Toka	Platinum	RS11003	1%	10	47	43	99%
1% Toka	White	RS11001	1%	19	66	15	99%
3% E Screen	Charcoal/Charcoal	R8102	3%	5	4	91	97%
3% E Screen	Charcoal/Cocoa	R8107	3%	4	7	89	97%
3% E Screen	Charcoal/Grey	R8108	3%	5	10	85	97%
3% E Screen	White/Linen	R8104	3%	16	63	21	97%
3% E Screen	White/Pearl	R8105	3%	10	52	38	97%
3% E Screen	White/White	R8106	3%	16	73	11	97%
3% M Screen	Charcoal/Apricot	R5803	3%	5	13	82	97%
3% M Screen	Charcoal/Charcoal	R5805	3%	3	4	93	97%
3% M Screen	Charcoal/Sable	R5808	3%	4	12	84	97%
3% M Screen	White Linen	R5807	3%	15	64	21	97%
3% M Screen	White/White	R5801	3%	18	71	11	97%
3% Sheerweave 2410	Beige	R06 Q20	3%	10	48	42	97%
3% Sheerweave 2410	Beige/Pearl Gray	R06 Q21	3%	7	39	54	97%
3% Sheerweave 2410	Charcoal	R0603	3%	3	3	94	97%
3% Sheerweave 2410	Charcoal/Alpaca	R0609	3%	4	20	76	97%
3% Sheerweave 2410	Charcoal/Chestnut	R0604	3%	3	6	91	97%
3% Sheerweave 2410	Charcoal/Gray	R06 V22	3%	3	9	88	97%
3% Sheerweave 2410	Oyster	R0605	3%	17	64	19	97%
3% Sheerweave 2410	Oyster/Beige	R0606	3%	11	55	34	97%
3% Sheerweave 2410	Oyster/Pearl Gray	R0607	3%	9	44	47	97%
3% Sheerweave 2410	Pearl Gray	R06 V20	3%	6	31	63	97%

*See **SOLAR OPTICAL INFORMATION** section for detail.

SOLAR OPTICAL CHART

Material Name	Color Name	Color #	Openness Factor*	Transmission*	Reflection*	Absorption*	UV Rating*
3% Sheerweave 2703	Charcoal	P2703 V21	3%	5	4	91	97%
3% Sheerweave 2703	Charcoal/Brown	P2703 V66	3%	6	17	77	97%
3% Sheerweave 2703	Charcoal/Gray	P2703 V22	3%	5	13	82	97%
3% Sheerweave 2703	Charcoal/Slate	P2703 V64	3%	7	27	65	97%
3% Sheerweave 2703	Charcoal/Taupe	P2703 V65	3%	6	24	70	97%
3% Sheerweave 2703	Oyster	P2703 P12	3%	22	62	16	97%
3% Sheerweave 2703	Oyster/Beige	P2703 P13	3%	15	58	27	97%
3% Sheerweave 2703	Oyster/Charcoal	P2703 P28	3%	7	40	53	97%
3% Sheerweave 2703	Oyster/Chestnut	P2703 P92	3%	7	42	51	97%
3% Sheerweave 2703	Oyster/Pearl Gray	P2703 P14	3%	9	53	38	97%
3% Sheerweave 2703	Oyster/Pewter	P2703 P91	3%	8	44	48	97%
3% Sheerweave 4400	Alabaster	RS2200	3%	10	62	28	97%
3% Sheerweave 4400	Ash	RS2 U64	3%	3	10	87	97%
3% Sheerweave 4400	Chalk	RS2202	3%	12	70	18	97%
3% Sheerweave 4400	Ebony	RS2 U65	3%	3	3	94	97%
3% Sheerweave 4400	Granite	RS2 U62	3%	6	48	46	97%
3% Sheerweave 4400	Greystone	RS2201	3%	6	39	55	97%
3% Sheerweave 4400	Pebblestone	RS2 U60	3%	9	51	40	97%
3% Sheerweave 4400	Pewter	RS2203	3%	3	26	71	97%
3% Sheerweave 4400	Tobacco	RS2 U66	3%	3	5	92	97%
3% Sheerweave 4600	Cappuccino	P4600 V95	3%	4	20	76	97%
3% Sheerweave 4600	Chalk	P4600 P06	3%	10	74	16	97%
3% Sheerweave 4600	Dark Bronze	P4600 V96	3%	4	5	91	97%
3% Sheerweave 4600	Ebony	P4600 V10	3%	5	43	52	97%
3% Sheerweave 4600	Ecru	P4600 Q59	3%	7	58	35	97%
3% Sheerweave 4600	Golden Sand	P4600 Q60	3%	6	37	57	97%
3% Sheerweave 4600	Granite	P4600 P10	3%	5	43	52	97%
3% Sheerweave 4600	Linen	P4600 U32	3%	8	64	28	97%
3% Sheerweave 4600	Pewter	P4600 V07	3%	5	31	64	97%
3% Sheerweave 4600	Sandstone	P4600 V44	3%	5	39	56	97%
3% Sheerweave 4903	Birch	P4903 Q25	3%	7	56	37	97%
3% Sheerweave 4903	Chalk	P4903 P06	3%	11	81	8	97%
3% Sheerweave 4903	Chalk/Black	P4903 P25	3%	3	25	72	97%
3% Sheerweave 4903	Chalk/Wheat	P4903 P26	3%	9	65	26	97%
3% Sheerweave 4903	Cobblestone	P4903 Q26	3%	4	38	58	97%
3% Sheerweave 4903	Ebony	P4903 V10	3%	3	5	92	97%
3% Sheerweave 4903	Flaxen	P4903 Q22	3%	6	43	51	97%
3% Sheerweave 4903	Kettal Grey	P4903 Q07	3%	4	47	49	97%
3% Sheerweave 4903	Pewter/Chalk	P4903 V03	3%	4	53	43	97%
3% Sheerweave 4903	Slate	P4903 V28	3%	3	12	85	97%
3% Sheerweave 4903	Soft Grey	P4903 Q27	3%	8	57	35	97%
3% Sheerweave 4903	Tobacco	P4903 Q16	3%	3	8	89	97%
3% Sheerweave 4903	Whitesands	P4903 Q23	3%	9	63	28	97%
3% Sheerweave 5000	Bark/Sienna	R0710	3%	6	16	78	97%
3% Sheerweave 5000	Chenille/Honey	R0707	3%	26	47	27	97%
3% Sheerweave 5000	Chenille/Marshmallow	R07 R89	3%	16	67	17	97%
3% Sheerweave 5000	Chenille/Pearl	R07 R90	3%	32	53	15	97%
3% Sheerweave 5000	Linen/Burlap	R07 U11	3%	10	30	60	97%
3% Sheerweave 5000	Linen/Cinnamon	R0702	3%	6	20	74	97%
3% Sheerweave 5000	Linen/Cranberry	R07 R11	3%	7	17	76	97%
3% Sheerweave 5000	Linen/Cream	R0704	3%	22	46	31	97%
3% Sheerweave 5000	Linen/Fig	R0705	3%	6	15	79	97%
3% Sheerweave 5000	Linen/Topaz	R07 U10	3%	11	24	65	97%
3% Sheerweave 5000	Wicker/Straw	R07 R93	3%	14	48	38	97%
3% T Screen	Charcoal/Charcoal	RS16005	3%	3	4	93	97%
3% T Screen	Charcoal/Grey	RS16006	3%	5	11	84	97%
3% T Screen	Sable/Charcoal	RS16003	3%	8	15	77	97%
3% T Screen	White/Pearl	RS16004	3%	13	49	38	97%
3% T Screen	White/Sable-Straw	RS16002	3%	16	56	28	97%
3% T Screen	White/White	RS16001	3%	18	70	12	97%
4% S Screen	Ginger	RS15006	4%	9	36	55	96%
4% S Screen	Granite	RS15004	4%	9	31	60	96%
4% S Screen	Papyrus	RS15003	4%	11	38	51	96%
4% S Screen	Porcelain	RS15001	4%	12	59	29	96%
4% S Screen	Sesame	RS15007	4%	6	18	76	96%

*See **SOLAR OPTICAL INFORMATION** section for detail.

SOLAR OPTICAL CHART

Material Name	Color Name	Color #	Openness Factor*	Transmission*	Reflection*	Absorption*	UV Rating*
4% Silver Screen	Beige	RS6501	4%	6	74	20	96%
4% Silver Screen	Black	RS6504	4%	4	75	21	96%
4% Silver Screen	Bronze	RS6503	4%	5	77	18	96%
4% Silver Screen	Light Grey	RS6500	4%	4	77	19	96%
4% Silver Screen	White	RS6502	4%	5	76	19	96%
5% E Screen	Charcoal/Charcoal	R5105	5%	7	10	83	95%
5% E Screen	Charcoal/Cocoa	R5104	5%	7	6	87	95%
5% E Screen	Charcoal/Grey	R5110	5%	7	10	83	95%
5% E Screen	Pure White	R5101	5%	20	71	9	95%
5% E Screen	White/Linen	R5108	5%	20	62	18	95%
5% E Screen	White/Pearl	R5109	5%	12	51	37	95%
5% M Screen Deco	Flagstone	R6107	5%	8	21	72	95%
5% M Screen Deco	Harvest Wheat	R6104	5%	8	16	76	95%
5% M Screen Deco	Hazelnut	R6105	5%	7	14	79	95%
5% M Screen Deco	Parchment	R6106	5%	16	63	21	95%
5% M Screen Deco	River Rock	R6102	5%	10	33	57	95%
5% M Screen Deco	Tumbleweed	R6103	5%	10	29	61	95%
5% Sheerweave 2000	Bone	P2000 Q05	5%	18	55	27	95%
5% Sheerweave 2000	Bone/Platinum	P2000 Q06	5%	12	43	45	95%
5% Sheerweave 2000	Bronze	P2000 Q10	5%	5	7	88	95%
5% Sheerweave 2000	Charcoal	P2000 V21	5%	6	4	90	95%
5% Sheerweave 2000	Charcoal/Chestnut	P2000 V24	5%	6	7	87	95%
5% Sheerweave 2000	Charcoal/Gray	P2000 V22	5%	7	9	84	95%
5% Sheerweave 2000	Platinum	P2000 V04	5%	10	35	55	95%
5% Sheerweave 2000	White	P2000 P02	5%	20	67	13	95%
5% Sheerweave 2000	White/Bone	P2000 P04	5%	18	61	21	95%
5% Sheerweave 2000	White/Platinum	P2000 P05	5%	13	49	38	95%
5% Sheerweave 2390	Beige	RS1 Q20	5%	14	47	39	95%
5% Sheerweave 2390	Beige/Pearl Gray	RS1 Q21	5%	11	38	51	95%
5% Sheerweave 2390	Charcoal	RS1105	5%	4	4	92	95%
5% Sheerweave 2390	Charcoal/Alpaca	RS1106	5%	7	18	75	95%
5% Sheerweave 2390	Charcoal/Chestnut	RS1104	5%	6	6	88	95%
5% Sheerweave 2390	Charcoal/Gray	RS1102	5%	5	9	86	95%
5% Sheerweave 2390	Oyster	RS1100	5%	21	61	18	95%
5% Sheerweave 2390	Oyster/Beige	RS1101	5%	17	54	29	95%
5% Sheerweave 2390	Oyster/Pearl Gray	RS1103	5%	14	45	41	95%
5% Sheerweave 2390	Pearl Gray	RS1 V20	5%	10	31	59	95%
5% Sheerweave 2705	Charcoal	P2705 V21	5%	7	4	89	95%
5% Sheerweave 2705	Charcoal/Brown	P2705 V66	5%	9	16	75	95%
5% Sheerweave 2705	Charcoal/Gray	P2705 V22	5%	8	6	86	95%
5% Sheerweave 2705	Charcoal/Slate	P2705 V64	5%	9	25	66	95%
5% Sheerweave 2705	Charcoal/Taupe	P2705 V65	5%	9	21	70	95%
5% Sheerweave 2705	Oyster	P2705 P12	5%	22	62	16	95%
5% Sheerweave 2705	Oyster/Beige	P2705 P13	5%	23	54	23	95%
5% Sheerweave 2705	Oyster/Charcoal	P2705 P28	5%	12	40	48	95%
5% Sheerweave 2705	Oyster/Chestnut	P2705 P92	5%	12	43	45	95%
5% Sheerweave 2705	Oyster/Pearl Gray	P2705 P14	5%	19	51	30	95%
5% Sheerweave 2705	Oyster/Pewter	P2705 P91	5%	11	46	43	95%
5% Sheerweave 4000	Alabaster	R0901	5%	15	57	28	95%
5% Sheerweave 4000	Ash	R09 U64	5%	7	11	82	95%
5% Sheerweave 4000	Chalk	R0902	5%	16	68	16	95%
5% Sheerweave 4000	Ebony	R09 U65	5%	6	5	89	95%
5% Sheerweave 4000	Granite	R0906	5%	11	41	48	95%
5% Sheerweave 4000	Greystone	R0904	5%	10	34	56	95%
5% Sheerweave 4000	Pebblestone	R09 U60	5%	14	49	37	95%
5% Sheerweave 4000	Pewter	R09 U63	5%	8	27	65	95%
5% Sheerweave 4000	Tobacco	R09 U66	5%	7	5	88	95%

*See **SOLAR OPTICAL INFORMATION** section for detail.

SOLAR OPTICAL CHART

Material Name	Color Name	Color #	Openness Factor*	Transmission*	Reflection*	Absorption*	UV Rating*
5% Sheerweave 4500	Cappuccino	P4500 V95	5%	6	18	76	95%
5% Sheerweave 4500	Chalk	P4500 P06	5%	12	74	14	95%
5% Sheerweave 4500	Dark Bronze	P4500 V96	5%	7	5	88	95%
5% Sheerweave 4500	Ebony	P4500 V10	5%	5	3	92	95%
5% Sheerweave 4500	Ecru	P4500 Q59	5%	9	56	35	95%
5% Sheerweave 4500	Golden Sand	P4500 Q60	5%	7	37	56	95%
5% Sheerweave 4500	Granite	P4500 P10	5%	6	47	47	95%
5% Sheerweave 4500	Linen	P4500 U32	5%	11	63	26	95%
5% Sheerweave 4500	Pewter	P4500 V07	5%	6	30	64	95%
5% Sheerweave 4500	Sandstone	P4500 V44	5%	8	40	52	95%
5% Sheerweave 5000	Aura Sable	R1021	5%	4	14	82	95%
5% Sheerweave 5000	Aura/Poetry	R10 S84	5%	10	24	66	95%
5% Sheerweave 5000	Bark/Ash	R1009	5%	NA	NA	NA	95%
5% Sheerweave 5000	Bark/Pewter	R1010	5%	NA	NA	NA	95%
5% Sheerweave 5000	Bark/Tiger Oak	R1001	5%	17	24	59	95%
5% Sheerweave 5000	Chenille/Driftwood	R1007	5%	12	26	52	95%
5% Sheerweave 5000	Coffee	R10 S82	5%	9	11	80	95%
5% Sheerweave 5000	Contour Essence	R1017	5%	0	0	0	95%
5% Sheerweave 5000	Contour Natural	R1016	5%	0	0	0	95%
5% Sheerweave 5000	Contour Smoke	R1018	5%	0	0	0	95%
5% Sheerweave 5000	Contour/Smudge	R10 S77	5%	13	18	69	95%
5% Sheerweave 5000	Linen/Pearl	R1014	5%	NA	NA	NA	95%
5% Sheerweave 5000	Linen/Taupe	R1015	5%	NA	NA	NA	95%
5% Sheerweave 5000	Marble/Sand	R10 Q43	5%	9	48	43	95%
5% Sheerweave 5000	Metro /Platinum	R1019	5%	NA	NA	NA	95%
5% Sheerweave 5000	Pavestone	R1020	5%	0	0	0	95%
5% Sheerweave 5000	Tweed/Buckeye	R1003	5%	9	28	63	95%
5% Sheerweave 5000	Tweed/Oatmeal	R1006	5%	11	34	55	95%
5% Sheerweave 5000	Twine/Flagstone	R1012	5%	0	0	0	95%
5% Sheerweave 5000	Twine/Metal	R1013	5%	0	0	0	95%
5% Sheerweave 5000	Twine/Oatmeal	R1011	5%	0	0	0	95%
5% Sheerweave 5000	Wicker/Mushroom	R10 Q51	5%	15	24	61	95%
7% Global Screen	Barley	RS14002	7%	NA	NA	NA	93%
7% Global Screen	Canvas	RS14001	7%	NA	NA	NA	93%
7% Global Screen	Platinum	RS14003	7%	NA	NA	NA	93%
7% Sheerweave 5000	Bamboo White/Wheat	R3409	7%	17	55	28	93%
7% Sheerweave 5000	Bamboo/Wheat	R34 Q46	7%	19	29	52	93%
7% Sheerweave 5000	Linen/Clay	R3408	7%	NA	NA	NA	93%
7% Sheerweave 5000	Twine/Jewel	R34 S73	7%	11	34	55	93%
10% E Screen	Charcoal/Charcoal	R1902	10%	12	3	85	90%
10% E Screen	Charcoal/Cocoa	R1907	10%	11	5	84	90%
10% E Screen	White Pearl	R1908	10%	20	50	30	90%
10% E Screen	White/Linen	R1905	10%	25	58	17	90%
10% E Screen	White/White	R1906	10%	25	66	9	90%
10% Sheerweave 2360	Beige	P2360 Q20	10%	19	44	37	90%
10% Sheerweave 2360	Beige/Pearl Gray	P2360 Q21	10%	17	39	44	90%
10% Sheerweave 2360	Charcoal	P2360 V21	10%	10	4	86	90%
10% Sheerweave 2360	Charcoal/Alpaca	P2360 V32	10%	12	15	73	90%
10% Sheerweave 2360	Charcoal/Chestnut	P2360 V24	10%	11	5	84	90%
10% Sheerweave 2360	Charcoal/Gray	P2360 V22	10%	12	8	80	90%
10% Sheerweave 2360	Oyster	P2360 P12	10%	27	57	16	90%
10% Sheerweave 2360	Oyster/Beige	P2360 P13	10%	24	51	25	90%
10% Sheerweave 2360	Oyster/Pearl Gray	P2360 P14	10%	20	45	35	90%
10% Sheerweave 2360	Pearl Gray	P2360 V20	10%	16	30	54	90%
10% Sheerweave 4100	Alabaster	P4100 U59	10%	19	56	25	90%
10% Sheerweave 4100	Ash	P4100 U64	10%	10	10	80	90%
10% Sheerweave 4100	Chalk	P4100 U58	10%	18	66	16	90%
10% Sheerweave 4100	Ebony	P4100 U65	10%	10	4	86	90%
10% Sheerweave 4100	Granite	P4100 U62	10%	15	42	43	90%
10% Sheerweave 4100	Greystone	P4100 U61	10%	14	35	51	90%
10% Sheerweave 4100	Pebblestone	P4100 U60	10%	16	48	36	90%
10% Sheerweave 4100	Pewter	P4100 U63	10%	12	26	62	90%
10% Sheerweave 4100	Tobacco	P4100 U66	10%	10	5	85	90%
10% Sheerweave 5000	Bamboo/Birch	R2603	10%	NA	NA	NA	90%
10% Sheerweave 5000	Crepe/Toasted Coconut	R26 U16	10%	24	40	36	90%
10% Sheerweave 5000	Seaglass/Chardonnay	R26 U28	10%	40	43	17	90%
10% Sheerweave 5000	Seaglass/Crystal	R26 U29	10%	44	49	7	90%
10% Sheerweave 5000	Seaglass/Silver	R26 U24	10%	33	27	40	90%

*See **SOLAR OPTICAL INFORMATION** section for detail.

SOLAR OPTICAL CHART

Material Name	Color Name	Color #	Openness Factor*	Transmission*	Reflection*	Absorption*	UV Rating*
Alexandria	Charcoal	RD403	Translucent	NA	NA	NA	NA
Alexandria	Duck Egg	RD402	Translucent	NA	NA	NA	NA
Alexandria	Oatmeal	RD401	Translucent	NA	NA	NA	NA
Astaire	Grey	RF42004	Translucent	NA	NA	NA	NA
Astaire	Ivory	RF42002	Translucent	NA	NA	NA	NA
Astaire	White	RF42001	Translucent	NA	NA	NA	NA
Avila R Blackout	Canvas	RB703	Blackout	0	75	25	99.99%
Avila R Blackout	Chalk	RB702	Blackout	0	65	35	99.99%
Avila R Blackout	Charcoal	RB708	Blackout	0	40	60	99.99%
Avila R Blackout	Khaki	RB705	Blackout	0	38	62	99.99%
Avila R Blackout	Linen	RB704	Blackout	0	59	41	99.99%
Avila R Blackout	Marine	RB706	Blackout	0	46	54	99.99%
Avila R Blackout	Onyx	RB709	Blackout	0	4	96	99.99%
Avila R Blackout	Pewter	RB707	Blackout	0	18	82	99.99%
Avila R Blackout	White	RB701	Blackout	0	84	16	99.99%
Baroque	Champagne	RD501	Translucent	NA	NA	NA	NA
Baroque	Cyan	RD502	Translucent	NA	NA	NA	NA
Baroque	Ebony	RD504	Translucent	NA	NA	NA	NA
Baroque	Ruby	RD503	Translucent	NA	NA	NA	NA
Blackout - Solid	Alabaster	R4011	Blackout	NA	NA	NA	99.99%
Blackout - Solid	Bone	R4005	Blackout	NA	NA	NA	99.99%
Blackout - Solid	Buff	R4008	Blackout	NA	NA	NA	99.99%
Blackout - Solid	Oyster	R4006	Blackout	NA	NA	NA	99.99%
Blackout - Solid	White	R4001	Blackout	NA	NA	NA	99.99%
Brilliance	Birch	RD802	Translucent	NA	NA	NA	NA
Brilliance	Dove Gray	RD804	Translucent	NA	NA	NA	NA
Brilliance	Pearl	RD801	Translucent	NA	NA	NA	NA
Brilliance	Putty	RD803	Translucent	NA	NA	NA	NA
Brilliance	Pyrite	RD805	Translucent	NA	NA	NA	NA
Brilliance	Steel	RD806	Translucent	NA	NA	NA	NA
Brilliance Blackout	Birch	RB602	Blackout	NA	NA	NA	99.99%
Brilliance Blackout	Dove Gray	RB604	Blackout	NA	NA	NA	99.99%
Brilliance Blackout	Pearl	RB601	Blackout	NA	NA	NA	99.99%
Brilliance Blackout	Putty	RB603	Blackout	NA	NA	NA	99.99%
Brilliance Blackout	Pyrite	RB605	Blackout	NA	NA	NA	99.99%
Brilliance Blackout	Steel	RB606	Blackout	NA	NA	NA	99.99%
Carrara	Coal	RD606	Translucent	NA	NA	NA	NA
Carrara	Saddle	RD604	Translucent	NA	NA	NA	NA
Carrara	Silver	RD603	Translucent	NA	NA	NA	NA
Carrara	Storm	RD605	Translucent	NA	NA	NA	NA
Carrara	Tusk	RD602	Translucent	NA	NA	NA	NA
Carrara	White	RD601	Translucent	NA	NA	NA	NA
Carrara Blackout	Coal	RB406	Blackout	NA	NA	NA	99.99%
Carrara Blackout	Saddle	RB404	Blackout	NA	NA	NA	99.99%
Carrara Blackout	Silver	RB403	Blackout	NA	NA	NA	99.99%
Carrara Blackout	Storm	RB405	Blackout	NA	NA	NA	99.99%
Carrara Blackout	Tusk	RB402	Blackout	NA	NA	NA	99.99%
Carrara Blackout	White	RB401	Blackout	NA	NA	NA	99.99%
Claudio	Ash	RD706	Translucent	NA	NA	NA	NA
Claudio	Cloud	RD701	Translucent	NA	NA	NA	NA
Claudio	Cream	RD702	Translucent	NA	NA	NA	NA
Claudio	Gray Matters	RD708	Translucent	NA	NA	NA	NA
Claudio	Mink	RD704	Translucent	NA	NA	NA	NA
Claudio	Mist	RD703	Translucent	NA	NA	NA	NA
Claudio	Reef	RD705	Translucent	NA	NA	NA	NA
Claudio	Sailcloth	RD707	Translucent	NA	NA	NA	NA

*See **SOLAR OPTICAL INFORMATION** section for detail.

SOLAR OPTICAL CHART

Material Name	Color Name	Color #	Openness Factor*	Transmission*	Reflection*	Absorption*	UV Rating*
Claudio Blackout	Ash	RB506	Blackout	NA	NA	NA	99.99%
Claudio Blackout	Cloud	RB501	Blackout	NA	NA	NA	99.99%
Claudio Blackout	Cream	RB502	Blackout	NA	NA	NA	99.99%
Claudio Blackout	Mink	RB504	Blackout	NA	NA	NA	99.99%
Claudio Blackout	Mist	RB503	Blackout	NA	NA	NA	99.99%
Claudio Blackout	Reef	RB505	Blackout	NA	NA	NA	99.99%
Cusco	Chateau	RF6400	Blackout	NA	NA	NA	99.99%
Cusco	Coconut Husk	RF6401	Blackout	NA	NA	NA	99.99%
Cusco	Shadow Ridge	RF6402	Blackout	NA	NA	NA	99.99%
Darien	Bark	RD106	Translucent	NA	NA	NA	NA
Darien	Beige	RD101	Translucent	NA	NA	NA	NA
Darien	Charcoal	RD107	Translucent	NA	NA	NA	NA
Darien	Driftwood	RD103	Translucent	NA	NA	NA	NA
Darien	Mocha	RD104	Translucent	NA	NA	NA	NA
Darien	Sand	RD102	Translucent	NA	NA	NA	NA
Darien	Sea Mist	RD105	Translucent	NA	NA	NA	NA
Drizzle	Flax	RD201	Translucent	NA	NA	NA	NA
Drizzle	Graphite	RD205	Translucent	NA	NA	NA	NA
Drizzle	Hessian	RD202	Translucent	NA	NA	NA	NA
Drizzle	Iron	RD204	Translucent	NA	NA	NA	NA
Drizzle	Tweed	RD203	Translucent	NA	NA	NA	NA
Fiona	Grey	RD303	Translucent	NA	NA	NA	NA
Fiona	Sand	RD301	Translucent	NA	NA	NA	NA
Fiona	Smokey Blue	RD302	Translucent	NA	NA	NA	NA
Flocke Blackout	Chartreux	R9205	Blackout	0	71	29	99.99%
Flocke Blackout	Crystal	R9204	Blackout	0	71	29	99.99%
Flocke Blackout	Sea Cliff	R9202	Blackout	0	71	29	99.99%
Flocke Blackout	Spun Silk	R9203	Blackout	0	70	30	99.99%
Hayworth	Linen	RF32001	Translucent	NA	NA	NA	NA
Hayworth	White	RF32000	Translucent	NA	NA	NA	NA
Illusion	Dove	RF34003	Translucent	NA	NA	NA	NA
Illusion	Flannel	RF34004	Translucent	NA	NA	NA	NA
Illusion	Ivory	RF34002	Translucent	NA	NA	NA	NA
Illusion	Snow	RF34001	Translucent	NA	NA	NA	NA
Jasper	Country Linen	RF5303	Translucent	57	12	49	NA
Jasper	Heather	RF5302	Translucent	52	8	52	NA
Jasper	Storm Cloud	RF5300	Translucent	39	3	57	NA
Jasper	Tweed	RF5301	Translucent	44	3	55	NA
Linview	Ash	R5613	Translucent	NA	NA	NA	NA
Linview	Cabana Wood	R5603	Translucent	NA	NA	NA	NA
Linview	Fog	R5611	Translucent	NA	NA	NA	NA
Linview	Macadamia	R5606	Translucent	NA	NA	NA	NA
Linview	Midnight Black	R5615	Translucent	NA	NA	NA	NA
Linview	Morning Light	R5602	Translucent	NA	NA	NA	NA
Linview	Navy	R5610	Translucent	NA	NA	NA	NA
Linview	New York Grey	R5614	Translucent	NA	NA	NA	NA
Linview	Pale Lapis	R5609	Translucent	NA	NA	NA	NA
Linview	Porpoise	R5612	Translucent	NA	NA	NA	NA
Linview	Rural Green	R5607	Translucent	NA	NA	NA	NA
Linview	Skyward	R5608	Translucent	NA	NA	NA	NA
Linview	Slate	R5605	Translucent	NA	NA	NA	NA
Linview	Summer White	R5601	Translucent	NA	NA	NA	NA
Linview	Weathered Walnut	R5604	Translucent	NA	NA	NA	NA

*See **SOLAR OPTICAL INFORMATION** section for detail.

SOLAR OPTICAL CHART

Material Name	Color Name	Color #	Openness Factor*	Transmission*	Reflection*	Absorption*	UV Rating*
Linview	Pale Oak	R5617	Translucent	NA	NA	NA	NA
Linview	Sea Smoke	R5616	Translucent	NA	NA	NA	NA
Linview	Soft Linen	R5618	Translucent	NA	NA	NA	NA
Linview Blackout	Alabaster	RB302	Blackout	NA	NA	NA	99.99%
Linview Blackout	Café Crème	RB303	Blackout	NA	NA	NA	99.99%
Linview Blackout	Collonade Gray	RB306	Blackout	NA	NA	NA	99.99%
Linview Blackout	Gauntlet Gray	RB309	Blackout	NA	NA	NA	99.99%
Linview Blackout	Pale Gray	RB307	Blackout	NA	NA	NA	99.99%
Linview Blackout	Pale Oak	RB311	Blackout	NA	NA	NA	99.99%
Linview Blackout	Pure White	RB301	Blackout	NA	NA	NA	99.99%
Linview Blackout	Sea Smoke	RB310	Blackout	NA	NA	NA	99.99%
Linview Blackout	Soft Linen	RB312	Blackout	NA	NA	NA	99.99%
Linview Blackout	Stone	RB304	Blackout	NA	NA	NA	99.99%
Linview Blackout	Tranquility	RB305	Blackout	NA	NA	NA	99.99%
Linview Blackout	Whale	RB308	Blackout	NA	NA	NA	99.99%
Montero	Dark Walnut	RF4200	Translucent	NA	NA	NA	NA
Montero	Java Coast	RF4201	Translucent	NA	NA	NA	NA
Montero	Wicker Basket	RF4202	Translucent	NA	NA	NA	NA
Moravia	Coastal	RF8602	Translucent	NA	NA	NA	NA
Moravia	Countryside	RF8600	Translucent	NA	NA	NA	NA
Moravia	Seabreeze	RF8601	Translucent	NA	NA	NA	NA
Santa Cruz	Bunglehouse Blue	RF3101	Translucent	NA	NA	NA	NA
Santa Cruz	Manchester	RF3100	Translucent	NA	NA	NA	NA
Santa Cruz	Night Sky	RF3106	Translucent	NA	NA	NA	NA
Santa Cruz	Rainforest	RF3107	Translucent	NA	NA	NA	NA
Santa Cruz Blackout	Bunglehouse Blue	RB102	Blackout	NA	NA	NA	99.99%
Santa Cruz Blackout	Manchester	RB101	Blackout	NA	NA	NA	99.99%
Santa Cruz Blackout	Night Sky	RB104	Blackout	NA	NA	NA	99.99%
Santa Cruz Blackout	Rainforest	RB103	Blackout	NA	NA	NA	99.99%
Scala Blackout	Gray	R10005	Blackout	NA	NA	NA	99.99%
Scala Blackout	Off White	R10002	Blackout	NA	NA	NA	99.99%
Scala Blackout	Silver	R10004	Blackout	NA	NA	NA	99.99%
Scala Blackout	White	R10001	Blackout	NA	NA	NA	99.99%
Sheerweave 7200R	Blazer	P7200R RB7	Blackout	0	71	29	99.99%
Sheerweave 7200R	Chiffon	P7200R RB4	Blackout	0	71	29	99.99%
Sheerweave 7200R	Chrome	P7200R RB5	Blackout	0	71	29	99.99%
Sheerweave 7200R	Earl Grey	P7200R RB6	Blackout	0	71	29	99.99%
Sheerweave 7200R	Oyster	P7200R RB2	Blackout	0	71	29	99.99%
Sheerweave 7200R	Raven	P7200R RB8	Blackout	0	71	29	99.99%
Sheerweave 7200R	Sail	P7200R RB3	Blackout	0	71	29	99.99%
Sheerweave 7200R	Swan	P7200R RB1	Blackout	0	71	29	99.99%
Sheerweave 7250R	Blazer	P7250R RL7	Translucent	NA	NA	NA	NA
Sheerweave 7250R	Chiffon	P7250R RL4	Translucent	NA	NA	NA	NA
Sheerweave 7250R	Chrome	P7250R RL5	Translucent	NA	NA	NA	NA
Sheerweave 7250R	Earl Grey	P7250R RL6	Translucent	NA	NA	NA	NA
Sheerweave 7250R	Oyster	P7250R RL2	Translucent	NA	NA	NA	NA
Sheerweave 7250R	Raven	P7250R RL8	Translucent	NA	NA	NA	NA
Sheerweave 7250R	Sail	P7250R RL3	Translucent	NA	NA	NA	NA
Sheerweave 7250R	Swan	P7250R RL1	Translucent	NA	NA	NA	NA
Sheerweave 7400	Cotton	P7400 U80	Blackout	0	64	36	99.99%
Sheerweave 7400	Flint	P7400 U87	Blackout	0	64	36	99.99%
Sheerweave 7400	Parchment	P7400 U81	Blackout	0	64	36	99.99%
Sheerweave 7400	Pebble	P7400 U83	Blackout	0	64	36	99.99%
Sheerweave 7400	Seagrass	P7400 U84	Blackout	0	64	36	99.99%
Sheerweave 7400	Sesame	P7400 U82	Blackout	0	64	36	99.99%
Sheerweave 7400	Shale	P7400 U85	Blackout	0	64	36	99.99%
Sheerweave 7400	Spice	P7400 U86	Blackout	0	64	36	99.99%
Sheerweave 7450	Cotton	P7450 U80	Translucent	NA	NA	NA	NA
Sheerweave 7450	Flint	P7450 U87	Translucent	NA	NA	NA	NA
Sheerweave 7450	Parchment	P7450 U81	Translucent	NA	NA	NA	NA
Sheerweave 7450	Pebble	P7450 U83	Translucent	NA	NA	NA	NA
Sheerweave 7450	Seagrass	P7450 U84	Translucent	NA	NA	NA	NA
Sheerweave 7450	Sesame	P7450 U82	Translucent	NA	NA	NA	NA
Sheerweave 7450	Shale	P7450 U85	Translucent	NA	NA	NA	NA
Sheerweave 7450	Spice	P7450 U86	Translucent	NA	NA	NA	NA

*See **SOLAR OPTICAL INFORMATION** section for detail.

SOLAR OPTICAL CHART

Material Name	Color Name	Color #	Openness Factor*	Transmission*	Reflection*	Absorption*	UV Rating*
Sheerweave 7500	Cloud	P7500 R39	Blackout	0	68	32	99.99%
Sheerweave 7500	Dune	P7500 R17	Blackout	0	68	32	99.99%
Sheerweave 7500	Ice	P7500 R13	Blackout	0	68	32	99.99%
Sheerweave 7500	Limestone	P7500 R41	Blackout	0	68	32	99.99%
Sheerweave 7500	Midnight	P7500 R22	Blackout	0	68	32	99.99%
Sheerweave 7500	Midnightx2	P7500 R99	Blackout	0	68	32	99.99%
Sheerweave 7500	Mist	P7500 R97	Blackout	0	68	32	99.99%
Sheerweave 7500	Nimbus	P7500 R42	Blackout	0	68	32	99.99%
Sheerweave 7500	Odyssey	P7500 R20	Blackout	0	68	32	99.99%
Sheerweave 7500	Orient	P7500 R21	Blackout	0	68	32	99.99%
Sheerweave 7500	Orientx2	P7500 S97	Blackout	0	68	32	99.99%
Sheerweave 7500	Porcelain	P7500 R40	Blackout	0	68	32	99.99%
Sheerweave 7500	Stone	P7500 R19	Blackout	0	68	32	99.99%
Sheerweave 7500	Tundra	P7500 R43	Blackout	0	68	32	99.99%
Sheerweave 7500R	Cloud	P7500R R45	Blackout	0	68	32	99.99%
Sheerweave 7500R	Dune	P7500R R51	Blackout	0	68	32	99.99%
Sheerweave 7500R	Ice	P7500R R44	Blackout	0	68	32	99.99%
Sheerweave 7500R	Limestone	P7500R R47	Blackout	0	68	32	99.99%
Sheerweave 7500R	Midnight	P7500R R55	Blackout	0	68	32	99.99%
Sheerweave 7500R	Mist	P7500R R48	Blackout	0	68	32	99.99%
Sheerweave 7500R	Nimbus	P7500R R49	Blackout	0	68	32	99.99%
Sheerweave 7500R	Odyssey	P7500R R53	Blackout	0	68	32	99.99%
Sheerweave 7500R	Orient	P7500R R54	Blackout	0	68	32	99.99%
Sheerweave 7500R	Porcelain	P7500R R46	Blackout	0	68	32	99.99%
Sheerweave 7500R	Stone	P7500R R52	Blackout	0	68	32	99.99%
Sheerweave 7500R	Tundra	P7500R R50	Blackout	0	68	32	99.99%
Sheerweave 7600	Bright White	P7600 U90	Blackout	0	46	54	99.99%
Sheerweave 7600	Coal	P7600 U97	Blackout	0	46	54	99.99%
Sheerweave 7600	Coffee	P7600 U96	Blackout	0	46	54	99.99%
Sheerweave 7600	Dove Grey	P7600 U93	Blackout	0	46	54	99.99%
Sheerweave 7600	Ivory	P7600 U99	Blackout	0	46	54	99.99%
Sheerweave 7600	Khaki	P7600 U92	Blackout	0	46	54	99.99%
Sheerweave 7600	Shell	P7600 U91	Blackout	0	46	54	99.99%
Sheerweave 7600	Taupe	P7600 U94	Blackout	0	46	54	99.99%
Sheerweave 7600	Thunder	P7600 U95	Blackout	0	46	54	99.99%
Sheerweave 7650	Bright White	P7650 U90	Translucent	NA	NA	NA	NA
Sheerweave 7650	Coal	P7650 U97	Translucent	NA	NA	NA	NA
Sheerweave 7650	Coffee	P7650 U96	Translucent	NA	NA	NA	NA
Sheerweave 7650	Dove Grey	P7650 U93	Translucent	NA	NA	NA	NA
Sheerweave 7650	Ivory	P7650 U99	Translucent	NA	NA	NA	NA
Sheerweave 7650	Khaki	P7650 U92	Translucent	NA	NA	NA	NA
Sheerweave 7650	Shell	P7650 U91	Translucent	NA	NA	NA	NA
Sheerweave 7650	Taupe	P7650 U94	Translucent	NA	NA	NA	NA
Sheerweave 7650	Thunder	P7650 U95	Translucent	NA	NA	NA	NA
Sheerweave 7700R	Chalk	P7700R TB4	Blackout	0	59	41	99.99%
Sheerweave 7700R	Concrete	P7700R TB3	Blackout	0	44	56	99.99%
Sheerweave 7700R	Crystal	P7700R TB1	Blackout	0	70	30	99.99%
Sheerweave 7700R	Graphite	P7700R TB5	Blackout	0	44	56	99.99%
Sheerweave 7700R	Onyx	P7700R TB7	Blackout	0	6	94	99.99%
Sheerweave 7700R	Pewter	P7700R TB6	Blackout	0	22	78	99.99%
Sheerweave 7700R	Sand	P7700R TB2	Blackout	0	57	43	99.99%
Sheerweave 7750R	Chalk	P7750R TL4	Translucent	NA	NA	NA	NA
Sheerweave 7750R	Concrete	P7750R TL3	Translucent	NA	NA	NA	NA
Sheerweave 7750R	Crystal	P7750R TL1	Translucent	NA	NA	NA	NA
Sheerweave 7750R	Graphite	P7750R TL5	Translucent	NA	NA	NA	NA
Sheerweave 7750R	Onyx	P7750R TL7	Translucent	NA	NA	NA	NA
Sheerweave 7750R	Pewter	P7750R TL6	Translucent	NA	NA	NA	NA
Sheerweave 7750R	Sand	P7750R TL2	Translucent	NA	NA	NA	NA
Sorrento	Bisque	RF35002	Translucent	NA	NA	NA	NA
Sorrento	Linen	RF35001	Translucent	NA	NA	NA	NA
Sorrento	Stucco	RF35003	Translucent	NA	NA	NA	NA

*See **SOLAR OPTICAL INFORMATION** section for detail.

SOLAR OPTICAL CHART

Material Name	Color Name	Color #	Openness Factor*	Transmission*	Reflection*	Absorption*	UV Rating*
Sunscreen (SW) 7000	Birch	R1101	Blackout	0	64	36	99.99%
Sunscreen (SW) 7000	Canvas	R11 U67	Blackout	0	64	36	99.99%
Sunscreen (SW) 7000	Canyon	R11 V41	Blackout	0	64	36	99.99%
Sunscreen (SW) 7000	Cocoa	R11 U69	Blackout	0	64	36	99.99%
Sunscreen (SW) 7000	Graphite	R1107	Blackout	0	64	36	99.99%
Sunscreen (SW) 7000	Mushroom	R1102	Blackout	0	64	36	99.99%
Sunscreen (SW) 7000	Onyx	R1103	Blackout	0	64	36	99.99%
Sunscreen (SW) 7000	Sand	R1104	Blackout	0	64	36	99.99%
Sunscreen (SW) 7000	Wheat	R11 Q57	Blackout	0	64	36	99.99%
Sunscreen (SW) 7000	White	R1106	Blackout	0	64	36	99.99%
Tundra	Antique White	RD9 02	Translucent	NA	NA	NA	NA
Tundra	Dark Gray	RD9 05	Translucent	NA	NA	NA	NA
Tundra	Ice White	RD9 01	Translucent	NA	NA	NA	NA
Tundra	Oxford Jean	RD9 06	Translucent	NA	NA	NA	NA
Tundra	Sand	RD9 03	Translucent	NA	NA	NA	NA
Tundra	Whale	RD9 04	Translucent	NA	NA	NA	NA
Tundra Blackout	Dark Gray	RB8 05	Blackout	NA	NA	NA	99.99%
Tundra Blackout	Ivory	RB8 02	Blackout	NA	NA	NA	99.99%
Tundra Blackout	Oxford Jean	RB8 06	Blackout	NA	NA	NA	99.99%
Tundra Blackout	Sand	RB8 03	Blackout	NA	NA	NA	99.99%
Tundra Blackout	Whale	RB8 04	Blackout	NA	NA	NA	99.99%
Tundra Blackout	White	RB8 01	Blackout	NA	NA	NA	99.99%
Uptown	Sterling	R7902	Translucent	NA	NA	NA	NA
Uptown	Sterling Room Darkening	R7901	Room Darkening	75	0	25	99.99%
World Textures 1	Cyprus Coast	R4802	Translucent	55	40	5	NA
World Textures 1	Medina Mirage	R4803	Translucent	55	30	15	NA
World Textures 1	Medina Vision	R4806	Translucent	55	30	15	NA
World Textures 1 Blackout	Cypress Formal	R5001	Blackout	75	0	25	99.99%
World Textures 2	Oslo Blend	R4902	Translucent	55	20	25	NA
World Textures 2 Blackout	Oslo Terrain	R5004	Blackout	NA	NA	NA	99.99%

*See **SOLAR OPTICAL INFORMATION** section for detail.

PRODUCT COMPONENTS – SKYLINE CLUTCHES AND BRACKETS

CLUTCH LIFT CONTINUOUS CONTROL WITH CASSETTE VALANCE OPTION

Large Cassette Valance (Part #SB20-0304-*)
Medium Cassette Valance (Part #CRV100*)
Small Cassette Valance (Part #CRV-*)

SL10 (Part #SL10H01*)
SL15 (Part #SL15H01*)
SL20 (Part #SL20H53*)
SL30 (Part #SL30H53*)
(Specify White or Black)

Skyline Pin End Plug
1 1/8" (Part #SLPEV01*)
1 1/2" (Part #SLPEV53*)
or (Part# SLPEHD53*)
(Specify White or Black)

Large Cassette Color Key

CASSETTE
020490-Anodized
050490-Black
080490-Bronze
075490-White
414490-Vanilla

END CAP
050120-Black
089120-Bronze
075120-White
414120-Vanilla
331120-Gray

Small & Medium Cassette Color Key

* = W – White
* = V – Vanilla
* = BZ – Bronze
* = BK – Black

Hardware Color Key

* = W – White
* = BK – Black

Plastic Chain (Part #RC458*)
* = 661 - White
* = 048 - Black
* = 674 - Vanilla
* = 064 - Bronze

Metal Chain:
(Part #10001) White
(Part #10002) Black
(Part #444904) Nickel
(Part #02059ANTBRASS) Antique Brass
(Part #00296MEDBRASS) Oil Rubbed
(Part #00297STAINSTEL) Stainless Steel

For Plastic Chain:
Clear Bead Stop (not shown)
(Part# RC130000)

Chain Connector (Part #RC469000)

For Metal Chain:
Metal Stop Ball (not shown)
(Part# 00624WHITE)
(Part#00624BLACK)
(Part#00625AB) Antique Brown
(Part#00625MB) Brass
(Part#444906) Nickel

Large End Cap
(Part #SB20-0303-*)

Medium End Cap
(Part #CREC100*)

Small End Cap
(Part #CREC–*)

Bottom Bar End Cap
(Part #ECS-CS5521-PC-CLR)

Optional Deluxe Hem Bar Endcaps
(Part #HBEC*) (not shown)

Hardware Color Key

* = W – White
* = V – Vanilla
* = A – Silver
* = BZ – Bronze
* = BK – Black

Tensioner Bracket Mounting Kit
(Part #KIT_1110)

Cord Tensioner
Cover: (Part #RB91-1334-Color)
Base: (Part #RB91-1337-Color)

Tensioner Color Key

075000 = White
414000 = Vanilla
473000 = Brown
050000 = Black

Bottom Bar
White (RC444967)
Black (RC444968)

Internal Cassette Brackets

Medium/Large Cassette
(Part #CRUSLB660)

Small Cassette
(Part #CRUSLB)

Universal Brackets (without Cassette)

1-1/2" Projection
(Part #SLB660*)

2" Projection
(Part #SLB680R*)

2-7/8" Projection
(Part #SLB690R*)

Intermediate Brackets
(for pin-end to pin-end shades)

2" Intermediate Bracket
(Part #SLB68OIB)

Bracket & Cover Color Key

* = W – White
* = BK – Black

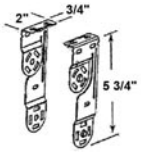

Dual Mounting Bracket
Black (Part #XLB65)
White (Part #XLB61)

3" Fascia

Chain Diverter
(SL20 Clutches only)
(Part# SLCDW) White
(Part# SLCDW) Black
(SL10 and SL15 Clutches only)
(Part# SL15DCVRW)
(Part# SL15DCVRBK)

3" brackets
(Part #SLFBKT3*)

3" fascia end cap
(Part #SLSEC*)

4" Fascia

4" Fascia End Cap
(Part #RC430*)
* = 785 - White
* = 864 - Bronze
* = 988 - Gray
* = 048 - Black
* = 350 - Vanilla

4" Brackets
(Part #SLFBKT4*)

4" Face Plate
RC430785 - White
RC430048 - Black
RC430864 - Bronze
RC430988 - Gray
RC430350 - Vanilla

Hardware Color Key

* = W – White
* = V – Vanilla
* = G – Silver
* = BZ – Bronze
* = BK – Black

Fascia Diverter Chain & Cover in White or Black

Fascia Bracket Clip
(Part #SLFBKTCLP4)

Bracket Covers

1-1/2" Bracket Cover
(Part# SLBCB* Individual)
(KIT-RS-015)

2" Bracket Cover
(Part #SLBC680*)

2-7/8" Bracket Cover
(Part #SLBC690*)

Standard Bracket for
Small Cassette Valance
(KIT-RS-010R 2 PACK)
(KIT-RS-011R 3 PACK)
(Part #VRBKT15 Individual)

Standard Bracket for
Medium Cassette Valance
(KIT-RS-008R 2 PACK)
(KIT-RS-009R 3 PACK)
(Part #SB20-00202-025100 Individual)

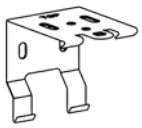

Standard Bracket for
Large Cassette Valance
(KIT-RS-006R 2 PACK)
(KIT-RS-007R 3 PACK)
(Part #V2BKT Individual)

PRODUCT COMPONENTS – R SERIES CLUTCHES AND BRACKETS

CLUTCH LIFT CONTINUOUS CONTROL WITH CASSETTE VALANCE OPTION

Large Clutch/End Plug Bracket
(Part #CRUBKT53L)

Small Clutch/End Plug Bracket
(Part #CRUBKT)

Lug

Large Intermediate Bracket
(Part #CRIMBKT53L)

Small Intermediate Bracket
(Part #CRIMBKT)

Large Cassette Valance (Part #SB20-0304-*)
Medium Cassette Valance (Part #CRV100*)
Small Cassette Valance (Part #CRV-*)

1-1/8" Clutch (Part #R8C01-WHITE)
(Part #R8C01BK-BLACK)

1-1/2" Clutch (Part #R16C53-WHITE)
(Part #R16C53BK-BLACK)

Large Cassette Color Key
CASSETTE 020490-Anodized 050490-Black 080490-Bronze 075490-White 414490-Vanilla
END CAP 050120-Black 089120-Bronze 075120-White 414120-Vanilla 331120-Gray

Small & Medium Cassette Color Key
* = W – White
* = V – Vanilla
* = BZ – Bronze
* = BK – Black

End plugs with Cassette

1-1/8" End Plug
(Part #CREP01-White)
(Part #CREP01BK-Black)

1-1/2" End Plug
(Part #CREP53V-Vanilla)
(Part #CREP53BK-Black)

End plugs – No Cassette

1-1/8" End Plug (Part #REP01-White)
1-1/8" End plug (Part #REP01BK-Black)

1-1/2" End Plug (Part #REP53-White)
1-1/2" End Plug (Part #REP53BK-Black)

Large End Cap
(Part #SB20-0303-*)

Medium End Cap
(Part #CREC100*)

Small End Cap
(Part #CREC–*)

Plastic Chain (Part #RC458*)
* = 661 - White
* = 048 - Black
* = 674 - Vanilla
* = 064 - Bronze

Metal Chain:
(Part #10001) White
(Part #10002) Black
(Part #444904) Nickel
(Part #02059ANTBRASS) Antique Brass
(Part #00296MEDBRASS) Oil Rubbed
(Part #00297STAINSTEL) Stainless Steel

For Plastic Chain:
Clear Bead Stop (not shown)
(Part# RC130000)

Chain Connector (Part #RC469000)

For Metal Chain:
Metal Stop Ball (not shown)
(Part# 00624WHITE)
(Part#00624BLACK)
(Part#00625AB) Antique Brown
(Part#00625MB) Brass

Bottom Bar End Cap
(Part #ECS-CS5521-PC-CLR)

Tensioner Bracket Mounting Kit
(Part #KIT_1110)

Cord Tensioner
Cover: (Part #RB91-1334-Color)
Base: (Part #RB91-1337-Color)

Optional Deluxe Hem Bar Endcaps
(Part #HBEC*) (not shown)

Hardware Color Key
* = W – White
* = V – Vanilla
* = A – Silver
* = BZ – Bronze
* = BK – Black

Tensioner Color Key
075000 = White
414000 = Vanilla
473000 = Brown
050000 = Black

Bottom Bar
White (RC444967)
Black (RC444968)

Standard Bracket for
1-1/8" Dia. Clutch Roller Loop
(Part #444908)
(KIT-RS-004)

Standard Bracket for
Small Cassette Valance
(KIT-RS-010R 2 PACK)
(KIT-RS-011R 3 PACK)
(Part #VRBKT15 Individual)

Standard Bracket for
1-1/2" Dia. Clutch Roller
(Part #444910)
(KIT-RS-005R)

Standard Bracket for
Medium Cassette
(KIT-RS-008R 2 PACK)
(KIT-RS-009R 3 PACK)
(Part #SB20-00202-025100 Individual)

Standard Bracket for
Large Cassette Valance
(KIT-RS-006R 2 PACK)
(KIT-RS-007R 3 PACK)
(Part #V2BKT Individual)

Extended Projection Bracket
for Clutch Roller
(1-1/8" Part #444909)
(1-1/2" Part #444911)

Note: Intermediate brackets allow for two shades under one continuous cassette valance up to 120"
– **available with the Clutch system.**
Small Intermediate Bracket (Part #CRIMBKT)
Large Intermediate Bracket (Part #CRIMBKT53L)

Note: Spacer block and extension brackets are not available.

3" Fascia Bracket - Flat

OB Cover

3" Fascia Brackets
RC461993-Vanilla (R8)
RC461992-White (R8)
RB362RTNBZ-Bronze (R8)
RC461048-Black (R8)
RC461988-Gray (R8)

3" R Series Fascia Plates
RC429785-White
RC429864-Bronze
RC449988 - Gray
RC429048 - Black
RC429350- Vanilla

4" Fascia Bracket - Flat

OB Cover

4" Fascia Brackets
445048-Bronze (R16)
RC445075-Gray (R16)
4450000002-White (R16)
RC479048-Black (R16)
445046-Vanilla (R16)

4" Fascia Plate
RC430785-White
RC430048-Black
RC430864-Bronze
RC430988-Gray
RC430350-Vanilla

Exterior Shade with Cable Guide

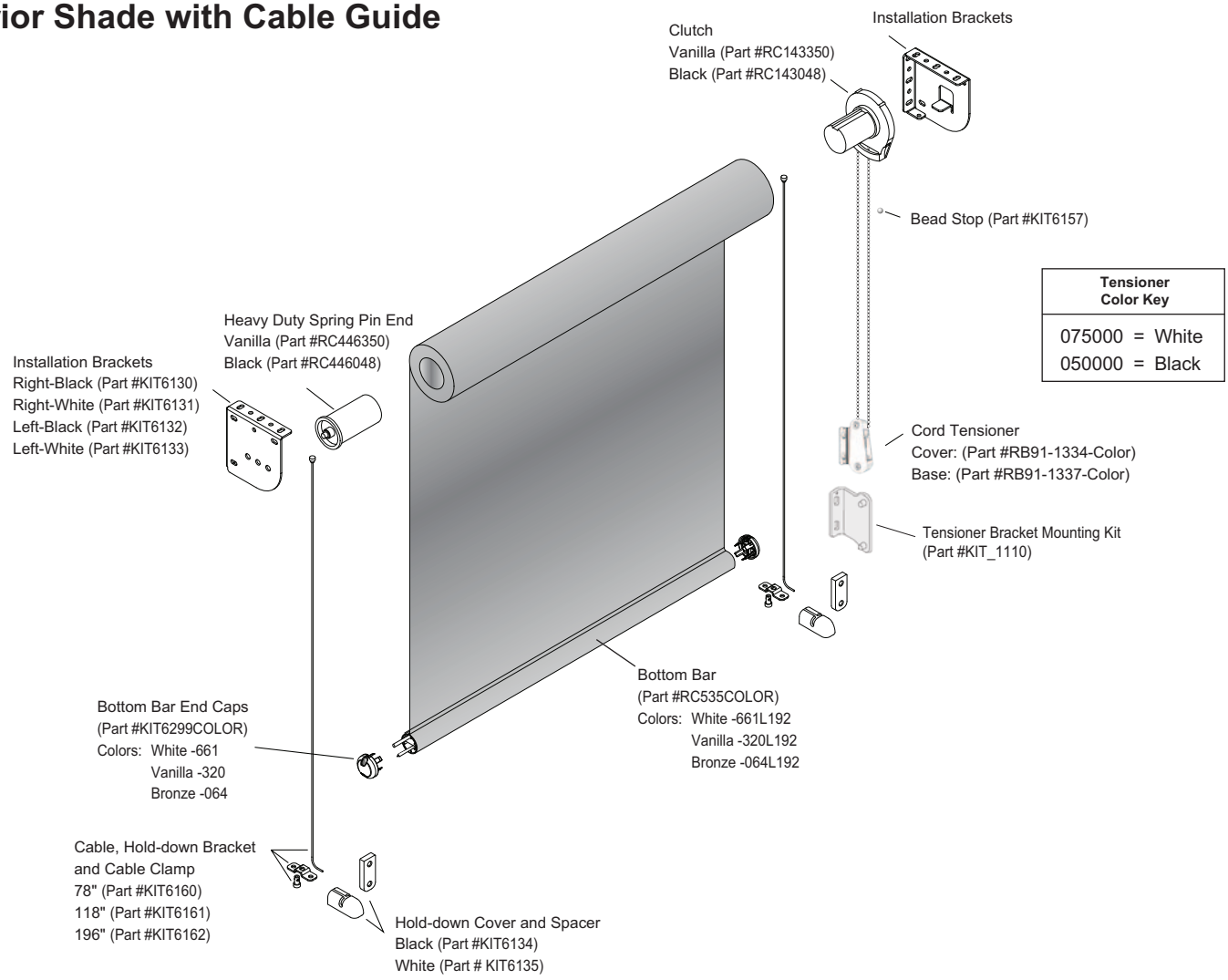

Exterior Shade with Cable Guide & Optional Cassette

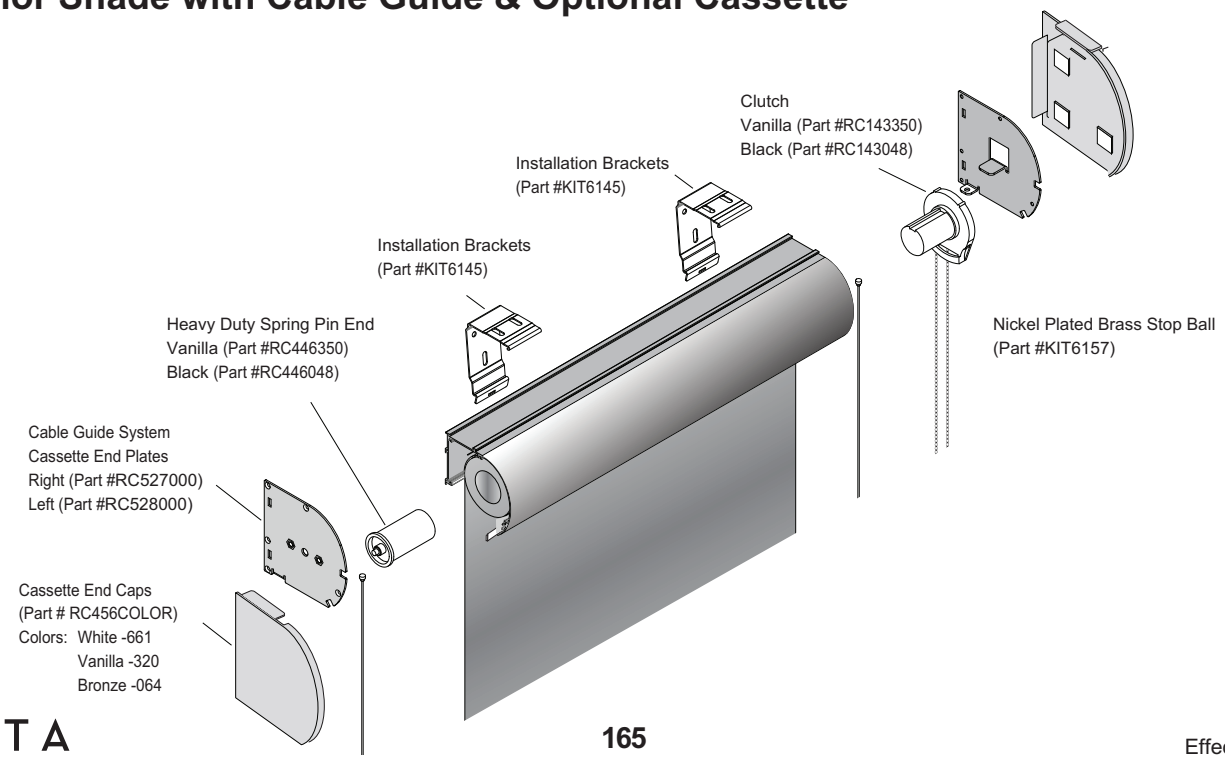

PRODUCT COMPONENTS – EXTERIOR SHADE WITH CASSETTE & GROMMET

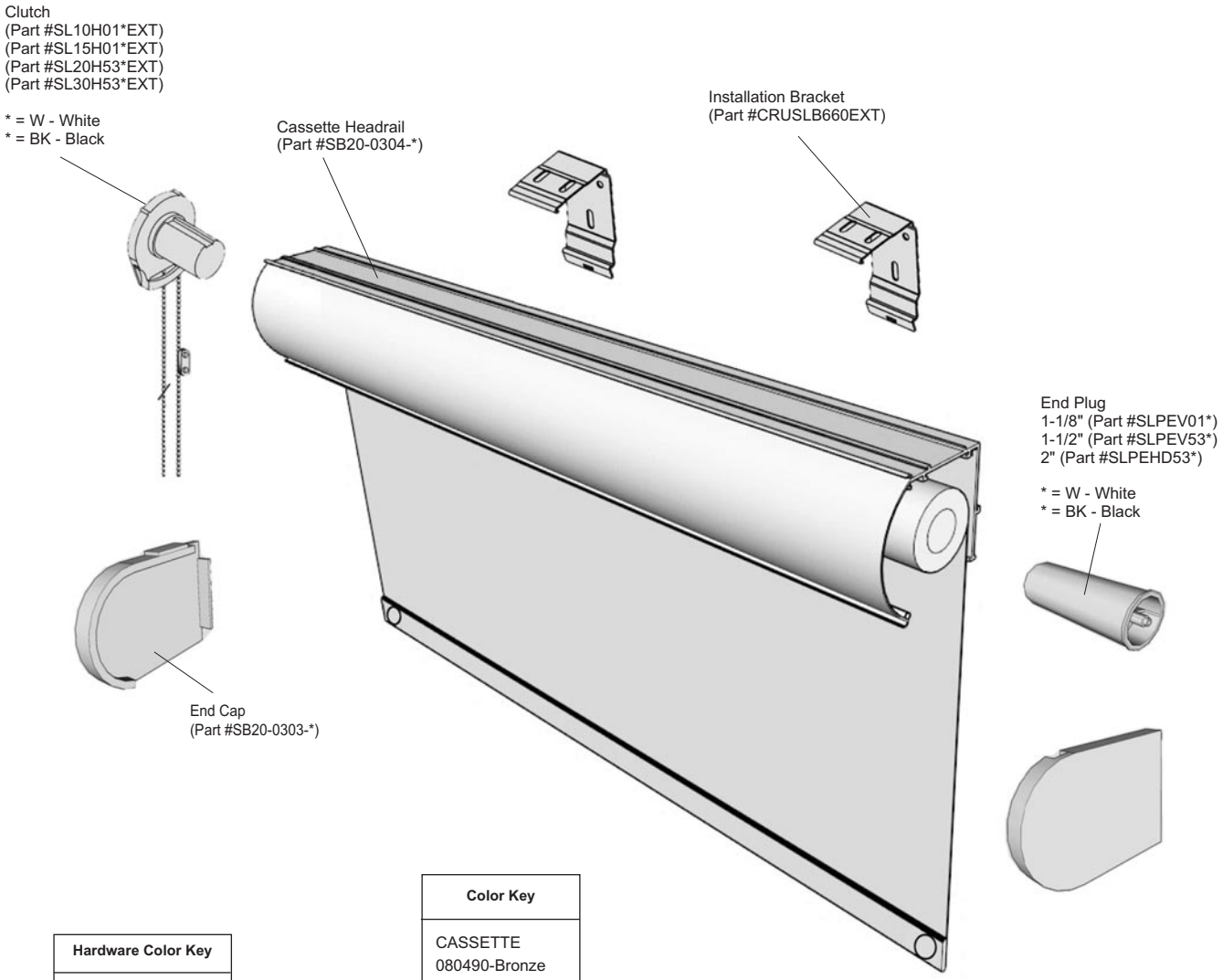

Hardware Color Key
* = W – White
* = BK – Black
* = BZ – Bronze
* = VA – Vanilla
* = SL – Silver

Color Key
CASSETTE 080490-Bronze 075490-White 414490-Vanilla
END CAP 089120-Bronze 075120-White 414120-Vanilla

PRODUCT COMPONENTS – CORDLESS ROLLER SHADE WITH MOUNTING BAR

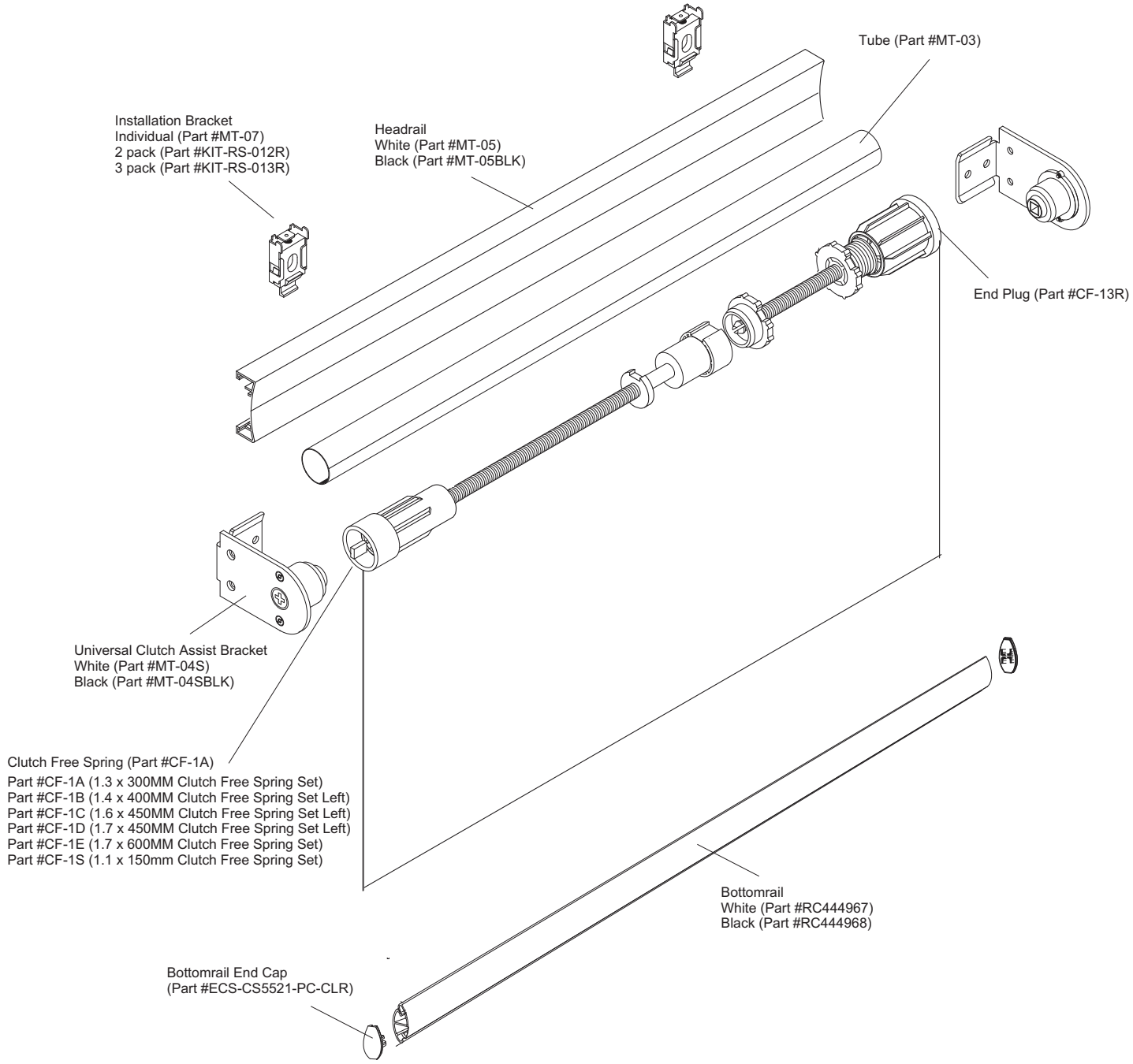

PRODUCT COMPONENTS – CORDLESS ROLLER SHADE WITH CASSETTE

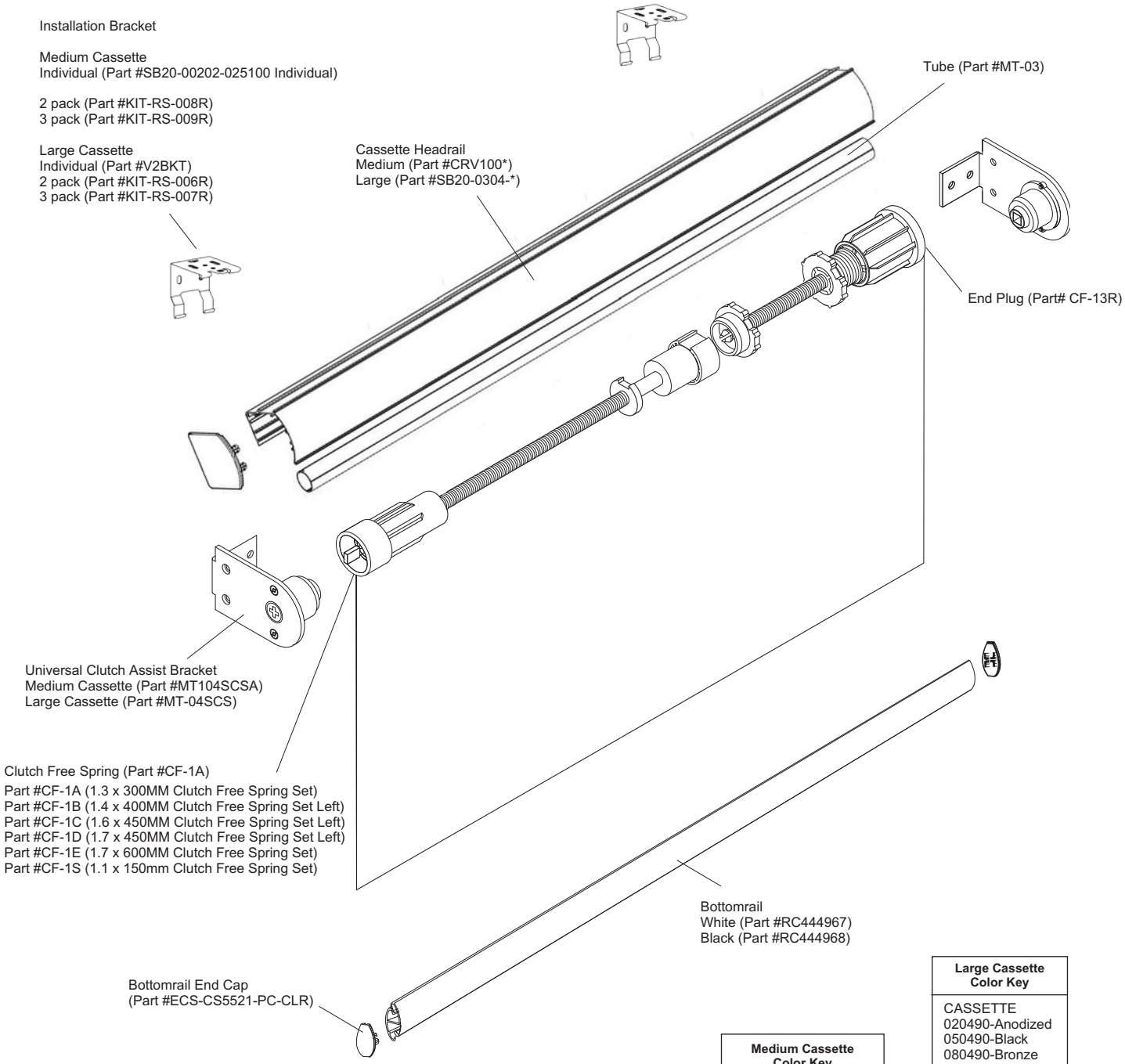

Medium Cassette Color Key
* = W – White
* = BK – Black
* = BZ – Bronze
* = V – Vanilla
* = A – Anodized

Large Cassette Color Key
CASSETTE 020490-Anodized 050490-Black 080490-Bronze 075490-White 414490-Vanilla
END CAP 050120-Black 089120-Bronze 075120-White 414120-Vanilla 331120-Gray

PRODUCT COMPONENTS – POWERWAND (NO TOP TREATMENT)

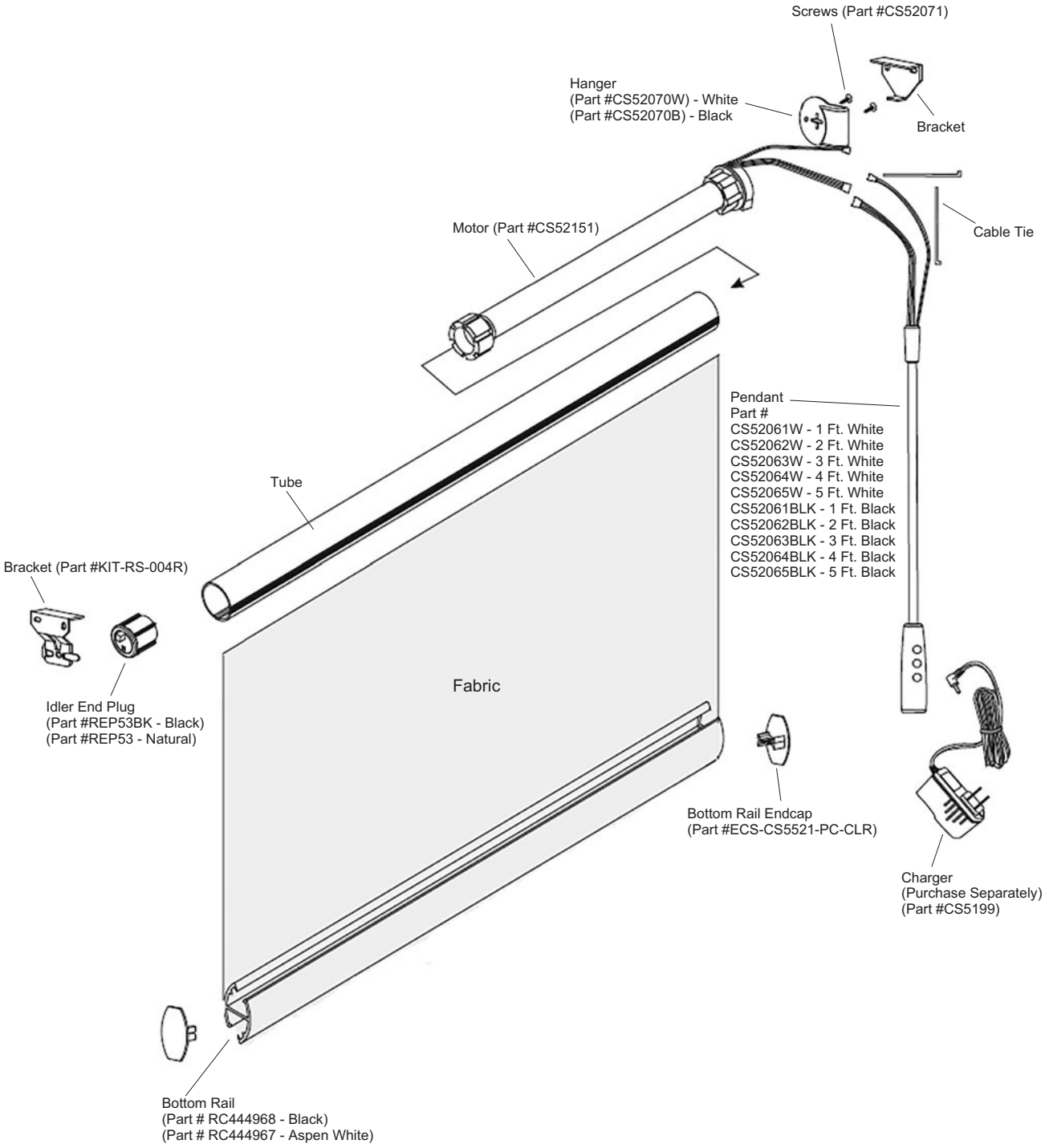

PRODUCT COMPONENTS – POWERWAND (WITH CASSETTE)

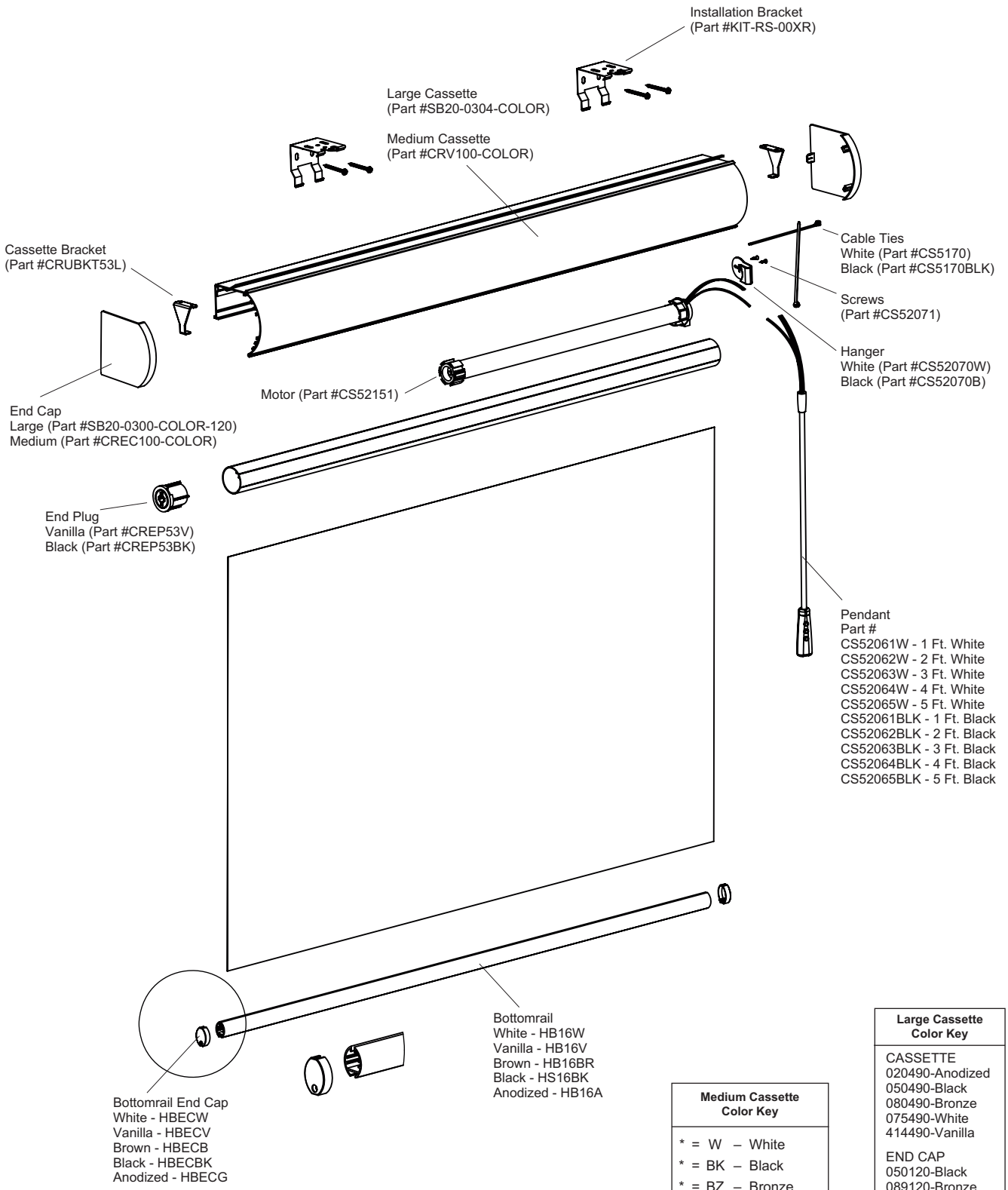

Medium Cassette Color Key
* = W – White
* = BK – Black
* = BZ – Bronze
* = V – Vanilla
* = A – Anodized

Large Cassette Color Key
CASSETTE 020490-Anodized 050490-Black 080490-Bronze 075490-White 414490-Vanilla
END CAP 050120-Black 089120-Bronze 075120-White 414120-Vanilla 331120-Gray

PRODUCT COMPONENTS – SIMPLICITY RECHARGEABLE

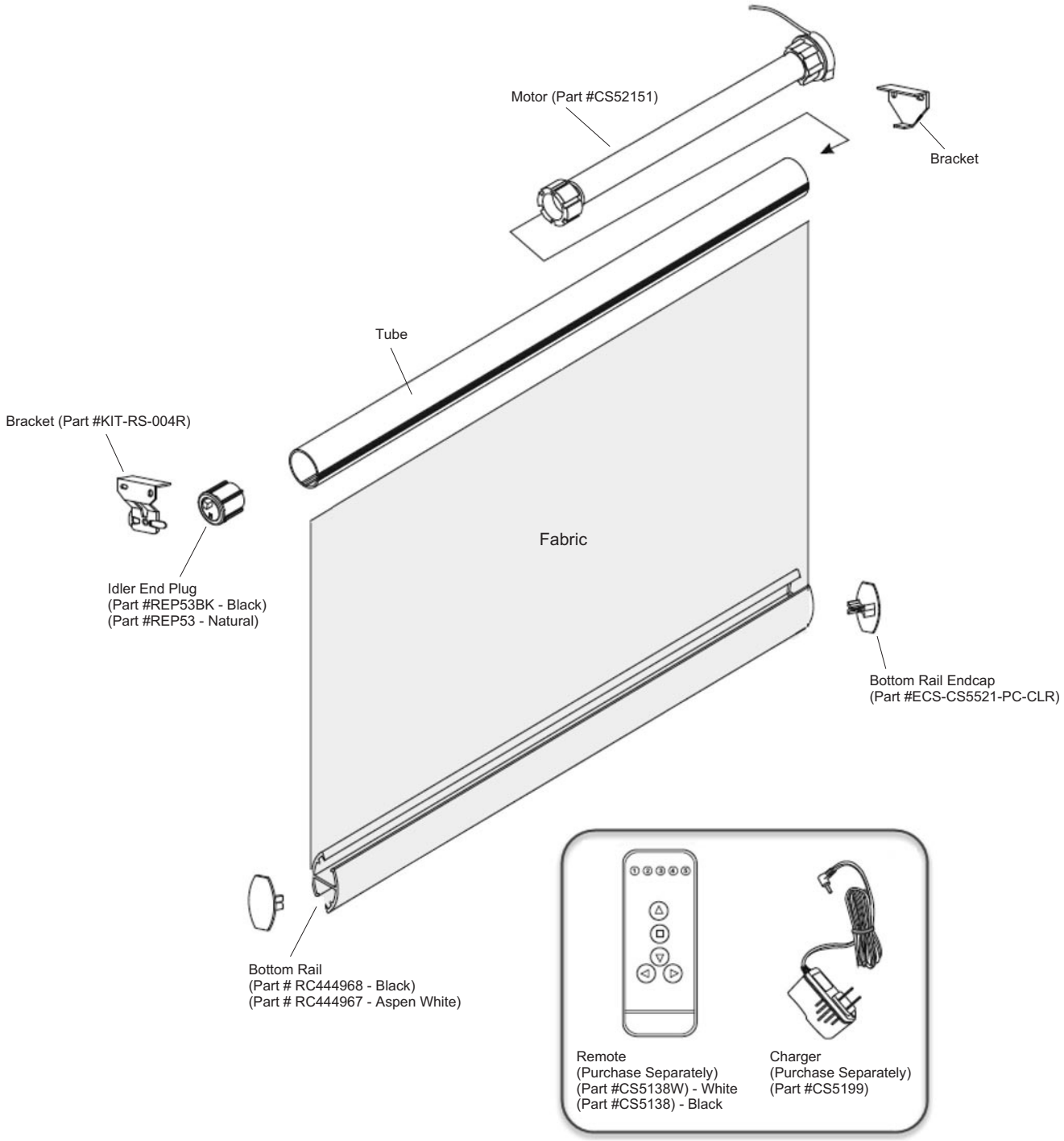

PRODUCT COMPONENTS – SIMPLICITY RECHARGEABLE (WITH CASSETTE)

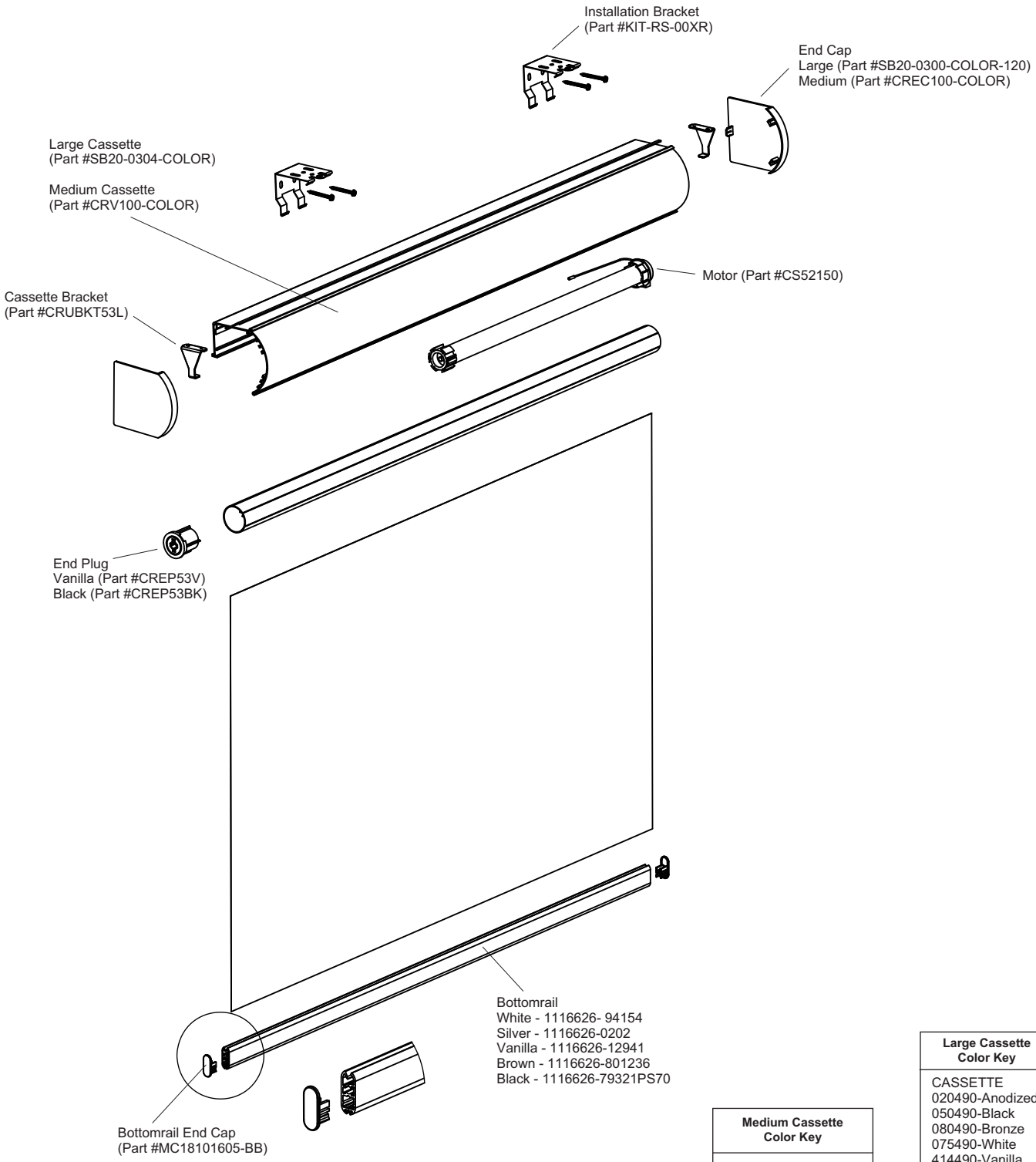

Medium Cassette Color Key
* = W – White
* = BK – Black
* = BZ – Bronze
* = V – Vanilla
* = A – Anodized

Large Cassette Color Key
CASSETTE 020490-Anodized 050490-Black 080490-Bronze 075490-White 414490-Vanilla
END CAP 050120-Black 089120-Bronze 075120-White 414120-Vanilla 331120-Gray

ROLLER SHADE CHARACTERISTICS

All Roller Shades are sent with complete installation instructions. These instructions include information on installing shades properly, child safety device attachments, and shade adjustments. To ensure that all shades operate properly we highly recommend you read these instructions thoroughly and understand them before installing any Roller Shade.

Although we maintain the strictest quality standards and inspect every shade before it leaves our factory, the following characteristics are considered normal and are not manufacturing defects:

- Loose fibers may appear on material edges from time to time. This is normal and does not affect the overall integrity of the shade. Simply trim off the loose fibers with a pair of sharp scissors.
- Material edges may curl inward (hourglass). This is especially noticeable on long narrow shades.
- Screen material is designed to have a clear view-through when viewing directly or on a slight angle. Waviness and distortion is characteristic when viewing from an angle of approximately 30% or more, depending on the pattern.
- Inside mount shades will have light leaks at the top and around outer edges of shades. This is especially noticeable on blackout and room darkening materials.
- Material tube deflection may occur, and a slight V shape may appear in the top and center portion of the shade, especially on shades over 120" wide. This is considered normal, providing that the material does not wrinkle when rolled up onto the tube.
- Please be aware that installing screen shades on windows that feature screens may cause a moire effect.