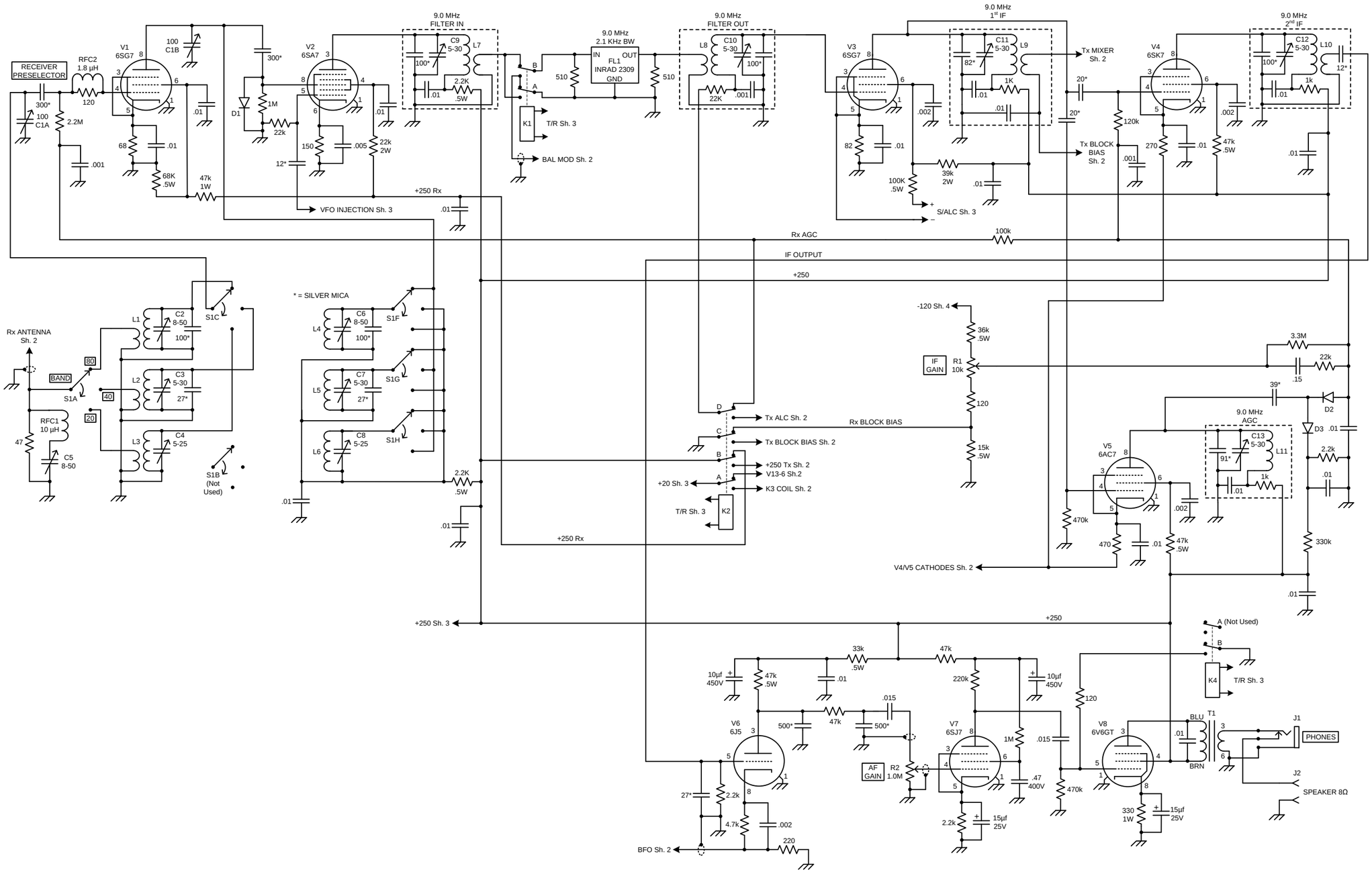

CTAL TRI-BANDER
100 WAT SSB TRANSCEIVER

SHEET 1
RECEIVER CIRCUITS

HOMEBREWED BY KG7TR

REVISION 12 JUN 2016

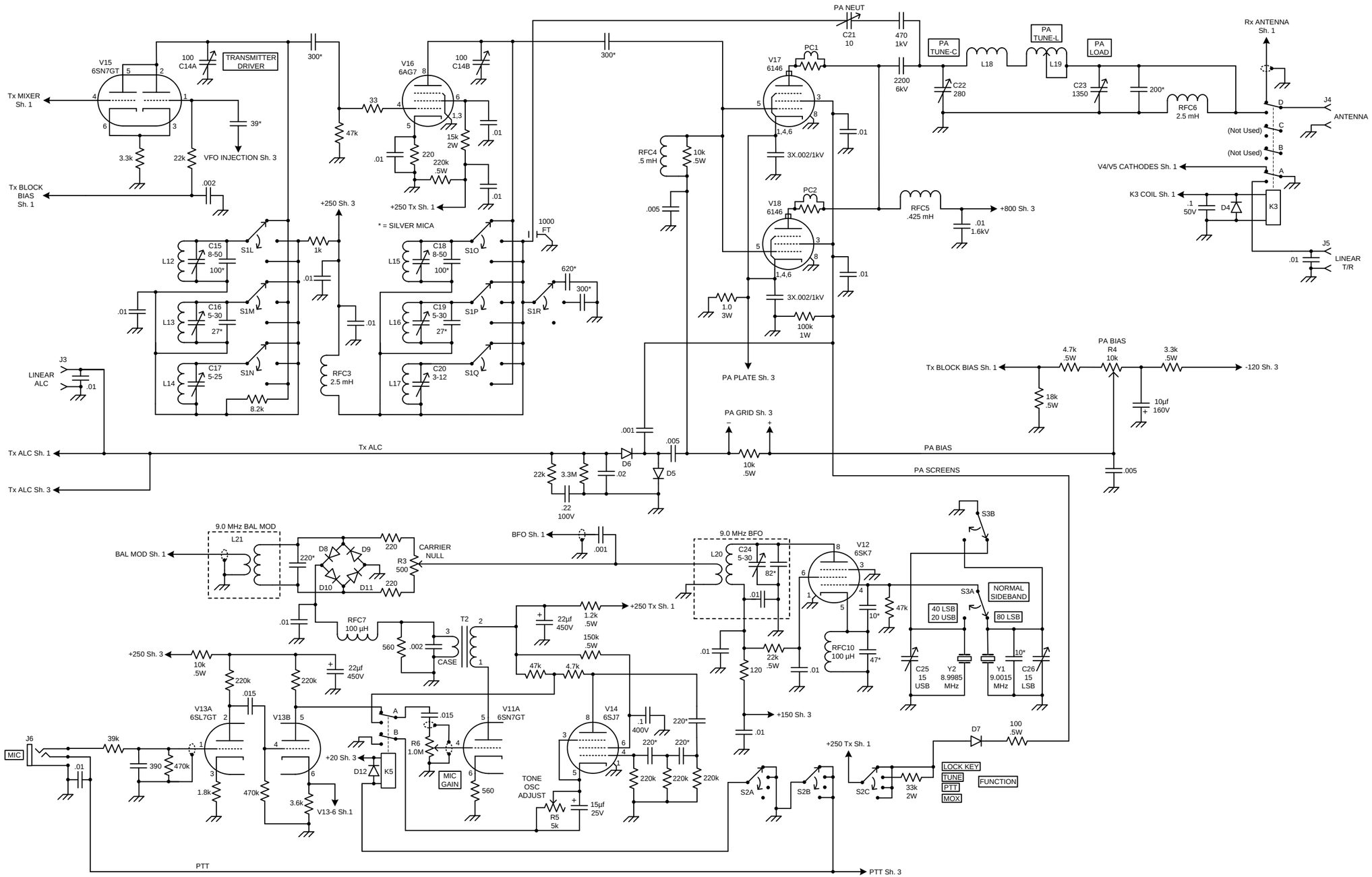

OCTAL TRI-BANDER
100 WAT SSB TRANSCEIVER

SHEET 2
TRANSMITTER CIRCUITS

HOMEBREWED BY KG7TR

REVISION 11 MARCH 2020

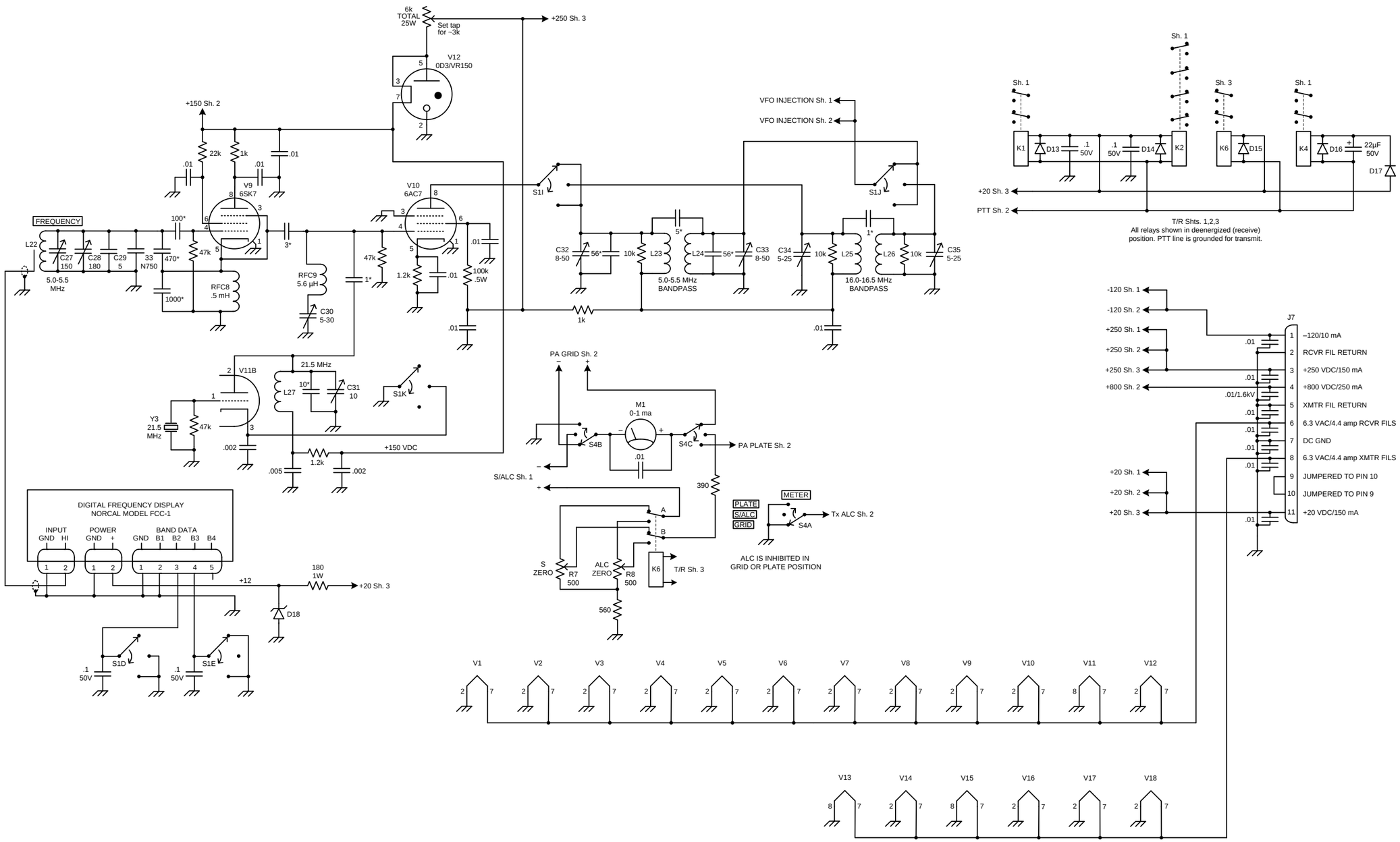

OCTAL TRI-BANDER
100 WAT SSB TRANSCEIVER

HOMEBREWED BY KG7TR

SHEET 3
VFO, PREMIXER, METERING, CONTROL, POWER CIRCUITS

REVISION 5 SEP 2016

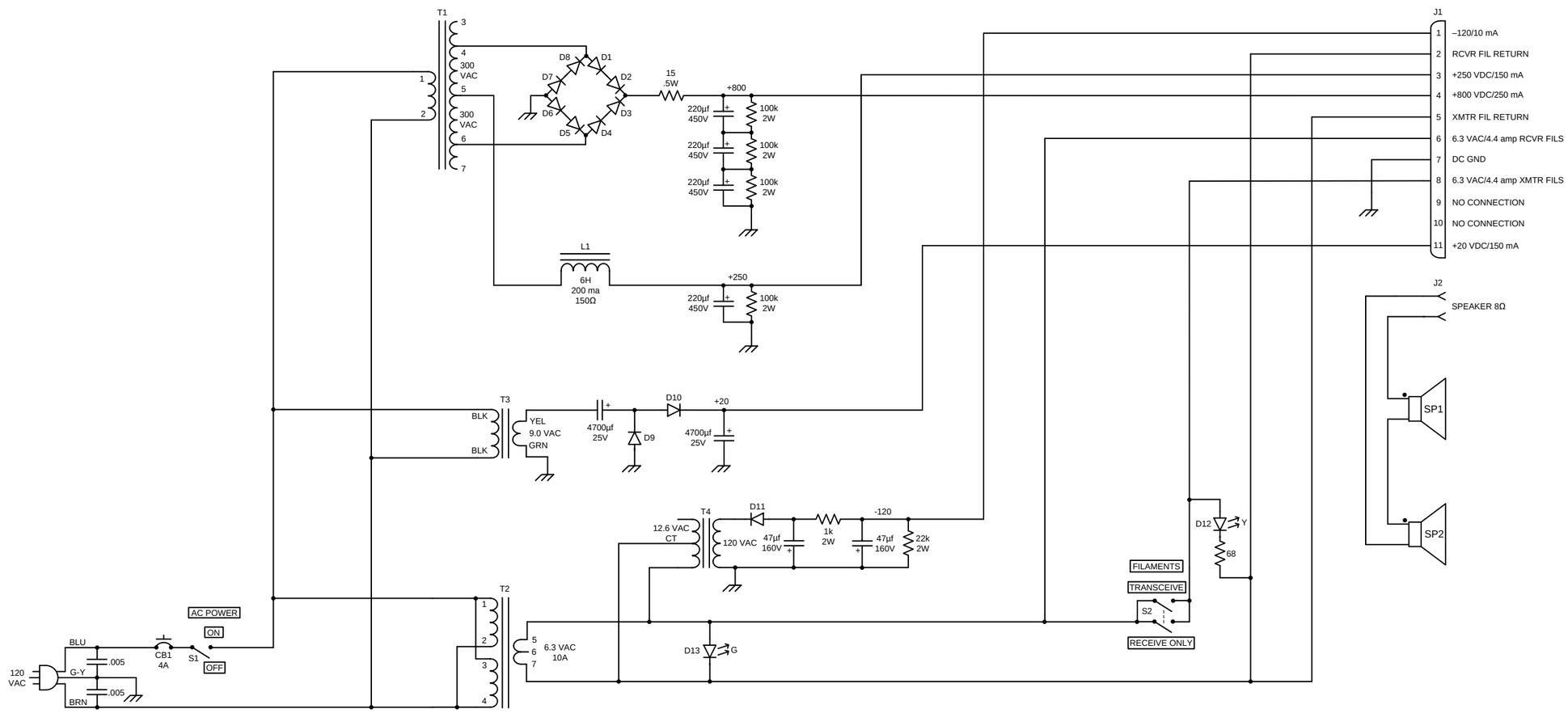

OCTAL TRI-BANDER
100 WAT SSB TRANSCEIVER

HOMEBREWED BY KG7TR

SHEET 4
POWER SUPPLY/
SPEAKER CIRCUITS

REVISION 14 APR 2016