STRUCTURAL NOTES

GENERAL NOTES

1. The governing Code for this Project is the Florida Building Code, 2014 Edition. This Code prescribes which edition of each referenced standard applies to this Project.
2. To the best of our knowledge, the Structural Drawings and Specifications comply with the applicable requirements of the governing Building Code.
3. Construction is to comply with the requirements of the governing Building Code and all other applicable Federal, State, and Local Codes, Standards, Regulations and Laws.
4. The Structural Documents are to be used in conjunction with the Architectural Documents. Use these Notes in conjunction with the Project Specifications. If a conflict exists, the more stringent governs.
5. See Project Specifications for testing.
6. Details labeled "typical" apply to all situations that are the same or similar to those specifically referenced, whether or not they are keyed in at each location. Questions regarding the applicability of typical details shall be resolved by the Architect.
7. Openings shown on Structural Drawings are only pictorial. See the Architectural and M.E.P. drawings for the size and location of openings in the structure.
8. Contractors who discover discrepancies, omissions or variations in the Contract Documents during bidding shall immediately notify the Architect. The Architect will resolve the condition and issue a written clarification.
9. The General Contractor shall coordinate all Contract Documents with field conditions and dimensions and Project Shop Drawings prior to construction. Do not scale drawings; use only printed dimensions. Report any discrepancies in writing to the Architect prior to proceeding with work. Do not change size or location of structural members without written instructions from the Structural Engineer of Record.
10. The Contractor shall protect adjacent property, his own work and the public from harm. The Contractor is solely responsible for construction means and methods, and jobsite safety including all OSHA requirements.
11. The Structure is designed to be structurally sound when completed. Prior to completion, the Contractor is responsible for stability and temporary bracing, including, but not limited to, masonry walls. Wherever the Contractor is unsure of these requirements, the Contractor shall retain a Florida Licensed Engineer to design and inspect the temporary bracing and stability of the structure.
12. Design Superimposed Loads:

OCCUPANCY	LIVE LOAD*	DEAD LOAD
Roof	20 psf	20 psf

Design superimposed dead loads listed above do not include masonry walls or other concentrated loads. See architectural drawings for these loads.

13. Design Wind Loads

Governing Code	ASCE 7-10
Building Risk Category	II
Ultimate Wind Speed	Vult = 149 mph
Mean Roof Height	20 feet
Directionality Factor	Kd = 0.85
Exposure	C
Internal Pressure Coefficient	GCpi = ±0.18

SHOP DRAWINGS AND OTHER SUBMITTALS

1. Submittals for special structural, load-carrying items that are required by Codes or Standards to resist forces must be prepared by, or under the direct supervision of, a Delegated Engineer. Examples include Structural Light Gage Steel Framing and Exterior Enclosure Systems
2. A Delegated Engineer is defined as a Florida Licensed Engineer who specializes in and undertakes the design of Structural Components or Structural Systems included in a specific submittal prepared for this Project and is an employee or officer of, or consultant to, the Contractor or Fabricator responsible for the submittal. The Delegated Engineer shall sign, seal and date the submittal, including calculations and drawings. See Specifications for more specific criteria.
3. The Trade Contractor is responsible for confirming and correlating dimensions at the job sites, for tolerances, clearances, quantities, fabrication processes and techniques of construction, coordination of the work with other trades and full compliance with the Contract Documents.
4. The General Contractor/Construction Manager shall review and approve submittals and shall sign and date each drawing prior to submitting to the Architect. This approval is to confirm that the Submittal is complete, complies with the Submittal Requirements and is coordinated with field dimensions, other trades, erection sequencing and constructibility.
5. The Structural Engineer reviews submittals to confirm that the submittal is in general conformance with the design concept presented in the Contract Documents. Quantities and dimensions are not checked. Notations on submittals do not authorize changes to the contract sum. Checking of the submittal by the Structural Engineer shall not relieve the Contractor of responsibility for deviations from the Contract Documents and from errors or omissions in the submittal.
6. In addition to the above, the Structural Engineer's review of Delegated Engineer submittals is limited to verifying that the specified structural submittal has been furnished, signed and sealed by the Delegated Engineer and that the Delegated Engineer has understood the design intent and used the specified Structural Criteria. No detailed check of calculations will be made. The Delegated Engineer is solely responsible for his/her design, including but not limited to the accuracy of his/her calculations and compliance with the applicable codes and standards.
7. CAD files of Structural Drawings may be used as an aid in preparing Shop Drawings only upon the Contractor signing an Agreement. When CAD files or copies of the Structural Drawings are made available, it is under the following conditions:
   A. All information contained in the CAD files or copies of the Structural Drawings are instruments of service of the Architect/Engineer and shall not be used for other projects, additions to the Project or the completion of the Project by others. CAD files and copies of the Structural Drawings remain the property of Bliss & Nyitray, Inc. and in no case shall their transfer be considered a sale;
   B. CAD files or copies of the Structural Drawings are not Contract Documents. In the event of a conflict, the Structural Drawings shall govern;
   C. The use of CAD files or copies of the Structural Drawings shall not in any way relieve the Contractor's responsibility for proper checking and coordination of dimensions, details, sizes and quantities of materials as required for the preparation of complete and accurate Shop Drawings; and
   D. The Contractor shall revise all references to Contract Document sheet numbers and section marks and shall remove information that is not required for their work from the CAD files or copies of the Structural Drawings, including the Title Block.
   E. Dimensions in the CAD files may not be precise and, in some cases, have been intentionally altered for presentation purposes. Do not scale dimensions electronically or otherwise.

SHALLOW FOUNDATIONS

1. Foundation design, soil preparation and compaction are based on Geotechnical Investigation, Data and Recommendations in Report **#15-0895.00** by GFA International dated 6/30/2015.
2. Footing sizes and reinforcing are based on an assumed allowable soil bearing capacity of 2500 psf. All footings shall bear on compacted fill prepared per the Geotechnical Report.
3. Subgrade preparation shall be field controlled and tested by a Licensed Soils Engineer in accordance with the Geotechnical Report. At completion, that Engineer shall prepare and submit to the Owner, Architect, Contractor and Structural Engineer a signed and sealed letter indicating that the recommendations of the Geotechnical Report have been followed.
4. Center all footings under their respective columns or walls, u.o.n.
5. Top of all footings is 2'-0" below the ground floor level, u.o.n.

EXCAVATION, BACKFILL AND DEWATERING

1. The Contractor is solely responsible for all excavation procedures including lagging, shoring, and protection of adjacent property, structures, streets and utilities in accordance with the requirements of the local building department and OSHA regulations. Do not excavate within one foot of the angle of repose of any soil bearing foundation unless the foundation is properly protected against settlement.
2. Do not backfill against walls until 7 days after the walls are braced by the structure or are temporarily braced. Do not backfill cantilevered retaining walls until concrete is 7 days old. Do not backfill until after completion and inspection of any waterproofing.
3. The Contractor is responsible for the disposal of all accumulated water in a manner that does not inconvenience or damage the work.

SLABS ON GRADE

1. Refer to Geotechnical Report for subgrade preparation more than 12" below bottom of slab.
2. Above subgrade, use fill containing not more than 10% passing #200 sieve and maximum 1 inch diameter. Compact to 95% of maximum dry density as determined by modified proctor ASTM D-1557. Each layer of fill shall not exceed 6" loose thickness. Compact prior to placement of the next layer.
3. Fill placement and compaction shall be monitored and accepted by the testing agency. Take a min. of one field density test (ASTM D-1556 or D-2922) for each 2,500 square feet of each layer. The testing agency shall randomly select test locations.
4. For interior slabs place 10 mil polyethylene sheeting between soil and bottom of slab. Do not use any sheeting below exterior concrete slabs.
5. Use 4" thick slabs on grade reinforced with 6 x 6 - W2.9 x W2.9 welded wire reinforcement supplied in flat sheets only. Use chairs to support wire fabric in the center of slab.
6. Place concrete in long-strip construction method. Provide crack control joints at 15 feet maximum to limit areas between joints to 225 sq. ft. in all floating slabs on grade. Locate to conform to bay spacing whenever possible, add crack control joints at re-entrant corners which tend to invite cracks.
7. In sidewalks and walkways, locate isolation joints at 20 ft. o.c. maximum score and tool between isolation joints in equal bays of 5 ft. or less.
8. See the Architectural Drawings for slab on grade depressions and other requirements.

REINFORCED CONCRETE

1. Comply with ACI 301 and 318 and Specification Sections 032000 and 033000.
2. Provide structural concrete with a minimum ultimate compressive design strength of 3,000 psi in 28 days.
3. Use normal weight concrete for all structural members. u.o.n.
4. Provide ASTM A-615 Grade 60 reinforcing steel. Reinforcing shall be accurately placed, rigidly supported and firmly tied in place, with appropriate bar supports and spacers. Lap continuous reinforcing 48 bar dia. Provide cover over reinforcing as follows:

Element	Bottom	Top	Sides
Footings	3"	2"	3"
Beams Above Grade	1 1/2"	1 1/2"	1 1/2"
Columns	-	-	1 1/2"
Slabs on Grade	2"	1"	2"

5. Where specified, provide plain, cold-drawn electrically-welded wire reinforcement conforming to ASTM A-185. Supply in flat sheets only. Lap splice one cross wire spacing plus two inches.
6. Utilities shall not penetrate beams or columns but may pass through slabs and walls individually, uon. For openings 24" long or less, cut reinforcing and replace alongside opening with splice bars of equivalent area with 48 bar dia. lap. Prepare and submit shop drawings for openings longer than 24". For rectangular openings 12" long or longer, add 1#5 x 6' mid depth diagonal at all 4 corners.
7. Where reinforcing steel congestion permits, conduit and pipes up to 1" diameter may be embedded in concrete per ACI 318, Section 6.3. Space at 3 diameters o.c. Place between outer layers of reinforcing. If conduits are significantly congested, additional reinforcing perpendicular to piping may be required. Requests to embed larger pipes should be accompanied by a detailed description and be submitted to the architect for evaluation.
8. Provide construction joints in accordance with ACI 318, Section 6.4. Provide keyways and adequate dowels. Submit drawings showing location of construction joints and direction of pour for review.
9. Provide 3/4" chamfer for all exposed corners.
10. Provide reinforcing steel placer with a set of Structural Drawings for field reference. Inspect reinforcing steel placing from structural drawings.

CONCRETE MASONRY

1. Construct masonry in accordance with Specification Sections 042731; ACI 530/ASCE 5, "Building Code Requirements for Concrete Masonry Structures"; and ACI 530.1/ASCE 6, "Specifications for the Design and Construction of Load-Bearing Concrete Masonry".
2. The structure is supported by bearing walls, u.o.n. Erect masonry prior to casting concrete columns within bearing walls or casting beams and slabs supported by bearing walls.
3. Use 50% solid, nominal 8x8x16, concrete masonry units conforming to ASTM C90. Block net area compressive strength shall be 1900 psi. Lay up units in stack bond. Sawcut units which are not in multiples of 8". Units shall be at least 8" long. Bond corners by lapping ends 8" in successive vertical courses. Design of walls is based on a f'm of 1500 psi. Manufacture masonry units with lightweight aggregate (maximum wt. 27 lb./unit) for all 8" concrete block walls in the following areas:
4. Use Type S mortar in accordance with ASTM C270 except use Type M mortar for retaining walls. Head and bed joints shall be 3/8" for the thickness of the face shell. Webs are to be fully mortared in all courses of piers, columns and pilasters; in the starting course; and where an adjacent cell is to be grouted. Remove mortar protrusions extending 1/2" or more into cells to be grouted.
5. Use standard (9 gauge) horizontal joint reinforcing in every other course. Joint reinforcing and anchors in exterior walls shall conform to ASTM A 153 Class B2, with a coating thickness of 1.50 oz/sf. Overlap discontinuous ends 6". Use prefabricated corners and tees. Use truss type, except use ladder type in walls with vertical reinforcing. Extend joint reinforcing a minimum of 4" into tie columns.
6. Use fine grout conforming to ASTM C-476, with a minimum compressive strength of 2500 psi in 28 days. Aggregate to conform to ASTM C404 for fine grout, with slump of 8" to 10". Grout all masonry containing reinforcing, all cells of 4 hour rated walls, and where indicated on the drawings. Allow mortar to cure 24 hours prior to grouting. Provide cleanout openings at the base of cells containing reinforcing steel to clean the cell and to tie the vertical bar to the dowel. In high-lift grouting, use 5'-0" (max.) lifts, with 1/2 hour to 1 hour between lifts. Vibrate each lift and reconsolidate the previous lift.
7. Use ASTM A-615 Grade 60 reinforcing steel. Reinforce walls with #5 @32" o.c. provide #4 @16" horizontal reinforcement. Use bar spacers at 10 ft. o.c. where grout pour height exceeds 10 ft.
8. At bond/tie beam corners and intersections, place 1 #5 x 5'-0" T & B corner bar, with 30" legs each way, at the exterior face.
9. Reinforced masonry wall construction shall be inspected by an Engineer or Architect in accordance with ACI 530.1/ASCE 6.
10. Where anchor bolts, wedge anchors or anchors set in epoxy are set in a masonry wall, fill cells with grout for bolted course, one course above and two courses below.
11. Provide lintels or headers with min. 8" bearing over all masonry openings.
12. Use pressure-treated wood for wood in contact with masonry.

POST-INSTALLED ANCHORS - GENERAL

1. Substitution requests will be considered for products having an ICC-ES report recognizing the product for the appropriate application. Substitute concrete anchors must be approved for use in cracked concrete. Substitution requests shall include signed and sealed calculations prepared by a Florida Licensed Engineer who demonstrates that substituted product is capable of achieving the equivalent performance values of the design basis product.
2. Confirm the absence of reinforcing steel by drilling a 1/4" diameter pilot hole for each anchor. Do not cut reinforcing steel without approval of the Structural Engineer.
3. Install in accordance with manufacturer's instructions. Refer to manufacturer's installation instructions for appropriate drill size. Clean hole and remove dust.

MECHANICAL ANCHORS

1. For anchoring into concrete: Wedge-Type Mechanical anchors shall have been tested and qualified for use in accordance with ACI 355.2 and ICC-ES AC193. Pre-approved anchors include the Hilti Kwik Bolt TZ, Powers Power-Stud+SD1, and Simpson Strong-Bolt 2.
2. For anchoring into grouted masonry: Wedge-Type Mechanical anchors shall have been tested and qualified for use in accordance with ICC-ES AC01. Pre-approved anchors include the Hilti Kwik Bolt III, Powers Power-Stud+SD1, and Simpson Wedge-All.

SCREW ANCHORS

1. For anchoring into concrete: Screw anchors shall have been tested and qualified for use in accordance with ACI 355.2 and ICC-ES AC193. Pre-approved anchors include the ¼"Ø Hilti HUS-EZ (KH-EZ) and the ¼"Ø Powers Wedge-Bolt +.
2. For anchoring into grouted or ungrouted masonry: Screw Anchors shall have been tested and qualified for use in accordance with ICC-ES AC106. Pre-approved anchors include the ITW Redhead Tapcon and Powers Tapper+.

ADHESIVE ANCHORS

1. Installer shall be certified by the ACI-CRSI Adhesive Anchor Installation Certification Program. Engineer: Discuss requirement with PIC.
2. For anchoring into concrete: Adhesive anchors shall have been tested and qualified for use in accordance with ACI 355.4 and ICC-ES AC308. Pre-approved anchors include Hilti HIT-HY 200, Powers PURE110+, and Simpson Set-XP.
3. For anchoring into grouted masonry: Adhesive anchors shall have been tested and qualified for use in accordance with ICC-ES AC58. Pre-approved anchors include Hilti HIT-HY 200, Powers PURE110+, and Simpson Set-XP.
4. Threaded rods for use with adhesive are galvanized ASTM F1554 Grade 36 U.O.N.

PRE-ENGINEERED COLD FORMED STEEL ROOF TRUSSES

1. Design of CFS roof trusses shall conform to the latest edition of "Specifications for the Design of Cold-formed Structural Steel Members" (AISI), all applicable building codes and standards specified in the Structural Notes.
2. Pre-fabricated CFS roof trusses and their connections to each other shall be designed by a delegated engineer for the loads indicated below.
3. Signed and Sealed calculations and shop drawings showing truss configuration with member sizes and connections, truss layout with piece marks, required truss to truss connections, design loads and erection details must be submitted for review prior to fabrication. Connections may use welds or screws.
4. Materials: web and chord shall be fabricated from Manufacturer's standard steel sections, 18 gage minimum or as required by design, and shall meet the requirements of ASTM A653/A653M and ASTM A924 with minimum yield strength of 50 ksi.
5. See Structural and Architectural Drawings for outline shape and any special conditions/locations of panel points.
6. Temporary and permanent truss bridging required for truss stability during installation and for maintaining limits of un-braced length required by the truss design are considered part of the light-gage truss system and shall be designed and detailed by the light-gage delegated engineer.
   A. Roof sheathing is adequate to provide lateral support to the top chord.
7. Truss design loads as follows:

Top Chord:	Dead Load	15 psf
	Live Load	20 psf
Bottom Chord:	Dead Load	10 psf

   Maximum Deflection Span/240

8. Handling, erection and bracing of trusses shall not cause twist, distortion or reduction of strength in truss units.
9. All truss members shall be zinc coated G90. All welds shall be touched up with a zinc rich protective paint for corrosion resistance.
10. Field splicing permitted unless specifically detailed by the delegated engineer and approved by engineer of record.

STEEL ROOF DECK RIGID INSULATION

1. Manufacture and install steel roof deck in accordance with specifications of the steel deck institute
2. Manufacture steel sheets conforming to ASTM A-653, with a minimum yield point of 33 ksi and a G-90 protective zinc coating. Minimum deck properties are as follow:

Depth	Gage	Sp (in3)	Sn (in3)
1"	20	0.167	0.165

3. Fasten deck to all supports with #10 TEK screws. Fasten deck to end support at each rib and to edge support at 12" o.c. fasten sidelaps with #10 TEK screws at 12" o.c.
4. Erect steel deck closures and other light gage material required to produce a completed installation.
5. Manufacture and install steel deck for a minimum two span condition. One span conditions are prohibited except where specifically shown on the drawings
6. Do not hang ceiling, ducts, light fixtures, equipment or other items from roof deck.

Net Wind Roof Uplift Pressures

ZONES	TRIBUTARY AREA (SF)					
	10	20	50	100	200	500
1	-36/33	-34/32	-32/31	-30/30	-30/30	-30/30
2	-42/33	-40/32	-38/31	-36/30	-36/30	-36/30
3	-42/33	-40/32	-38/31	-36/30	-36/30	-36/30

Wall Wind Pressures (PSF)

ZONES	TRIBUTARY AREA (SF)					
	10	20	50	100	200	500
4	-39/36	-37/34	-35/32	-34/31	-32/29	-30/27
5	-48/36	-45/34	-40/32	-37/31	-34/29	-30/27

Wind pressure notes

1. Numbers on this sheet are the components and cladding gross unfactored service pressures perpendicular to the surface (in p.s.f.) based on tributary area. multiply service pressures by 1.6 to obtain wind pressures for factored loads using strength design (asce 7-10 2.3).
2. Pressures are derived from asce 7-10.
3. Directionality factor kd = .85
4. Negative pressures act away from surface, positive pressures act toward surface.
5. Zones 2,3, and 5 occur within 5'-0" of edges and corners

Overhangs

ZONES	TRIBUTARY AREA (SF)					
	10	20	50	100	200	500
20H	-66	-64	-62	-60	-60	-60
30H	-66	-64	-62	-60	-60	-60

WOLFBERG ALVAREZ
ARCHITECTURE · ENGINEERING
3225 AVIATION AVE., SUITE 400
MIAMI, FLORIDA 33133
V 305.666.5474
F 305.666.4994
WOLFBERGALVAREZ.COM
AA 002416 EB 002354

SEMINOLE AH-THA-THI-KI
STORAGE BUILDING
34450 W BOUNDARY ROAD
CLEWISTON, FL 33440

SEAL
PAUL ANTHONY ZILIO LICENSE No 47013 STATE OF FLORIDA PROFESSIONAL ENGINEER
Paul A. Zilio, P.E. Fla. Reg. No. 47013
BNI Project No. 14M27

MARCEL R. MORLOTE, A.I.A.
FL. ARCHITECT
FL. ARCH. REG. NO. 9564

WA PROJECT NO.: 21524.00

ISSUE DATE
05/27/2016

NO.	REVISION DATE

BLISS & NYITRAY, INC.
STRUCTURAL ENGINEERS
Certificate of Authorization No.CA 674
800 Douglas Road, Suite 300
Coral Gables Florida, 33134
Tel. (305) 442-7086 Fax (866) 832-5291
www.bnlengineers.com
Paul A. Zilio, P.E. Fla. Reg. No. 47013
BNI Project No. 16M16

DRAWING TITLE
General Notes

SHEET NUMBER
S1.01

To the best of the Architect's or Engineer's knowledge, the plans and specifications comply with the applicable minimum codes and the applicable fire-safety standards as determined by the local authority in accordance with F.B.C. section 110.3.7.4.4 and Chapter 633, Florida Statutes.

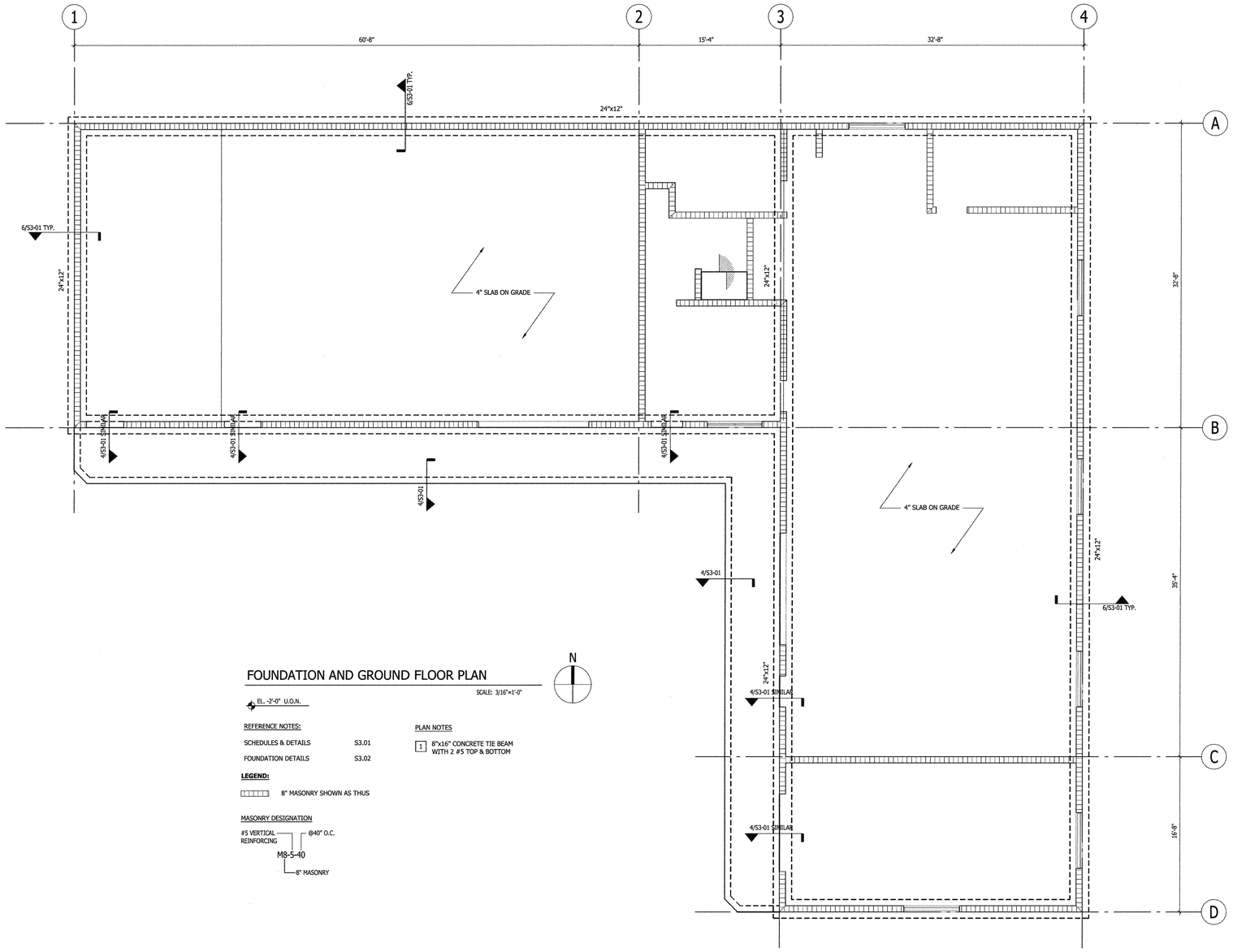

FOUNDATION AND GROUND FLOOR PLAN

SCALE: 3/16"=1'-0"

N

EL. -2'-0" U.O.N.

REFERENCE NOTES:

SCHEDULES & DETAILS	S3.01
FOUNDATION DETAILS	S3.02

LEGEND:

8" MASONRY SHOWN AS THUS

MASONRY DESIGNATION

#5 VERTICAL REINFORCING — @40" O.C.

M8-5-40

8" MASONRY

PLAN NOTES

1 8"x16" CONCRETE TIE BEAM WITH 2 #5 TOP & BOTTOM

WOLFBERG ALVAREZ
ARCHITECTURE · ENGINEERING
3225 AVIATION AVE., SUITE 400
MIAMI, FLORIDA 33133
V 305.666.5474
F 305.666.4994
WOLFBERGALVAREZ.COM
AA 002416 EB 002354

SEMINOLE AH-THA-THI-KI STORAGE BUILDING

34450 W BOUNDARY ROAD
CLEWISTON, FL 33440

SEAL
PAUL ANTHONY ZILIO
LICENSE No. 47013
STATE OF FLORIDA
PROFESSIONAL ENGINEER
Paul A. Zilio, P.E. Fla. Reg. No. 47013
BNI Project No. 14427

MARCEL E. MORLOTE, A.I.A.
FL ARCHITECT
FL ARCH. REG. NO. 9564

WA PROJECT NO.: 21524.00

ISSUE DATE
05/27/2016

NO.	REVISION DATE

DRAWING TITLE
Foundation and Ground Floor Plan

SHEET NUMBER
S2.01

BLISS & NYITRAY, INC.
STRUCTURAL ENGINEERS
Certificate of Authorization No.CA 674
800 Douglas Road, Suite 300
Coral Gables Florida, 33134
Tel. (305) 442-7086 Fax (866) 832-5291
www.bnlengineers.com
Paul A. Zilio, P.E. Fla. Reg. No. 47013
BNI Project No. 16M16

To the best of the Architect's or Engineer's knowledge, the plans and specifications comply with the applicable minimum codes and the applicable fire–safety standards as determined by the local authority in accordance with F.B.C. section 110.3.7.4.4 and Chapter 633, Florida Statutes.

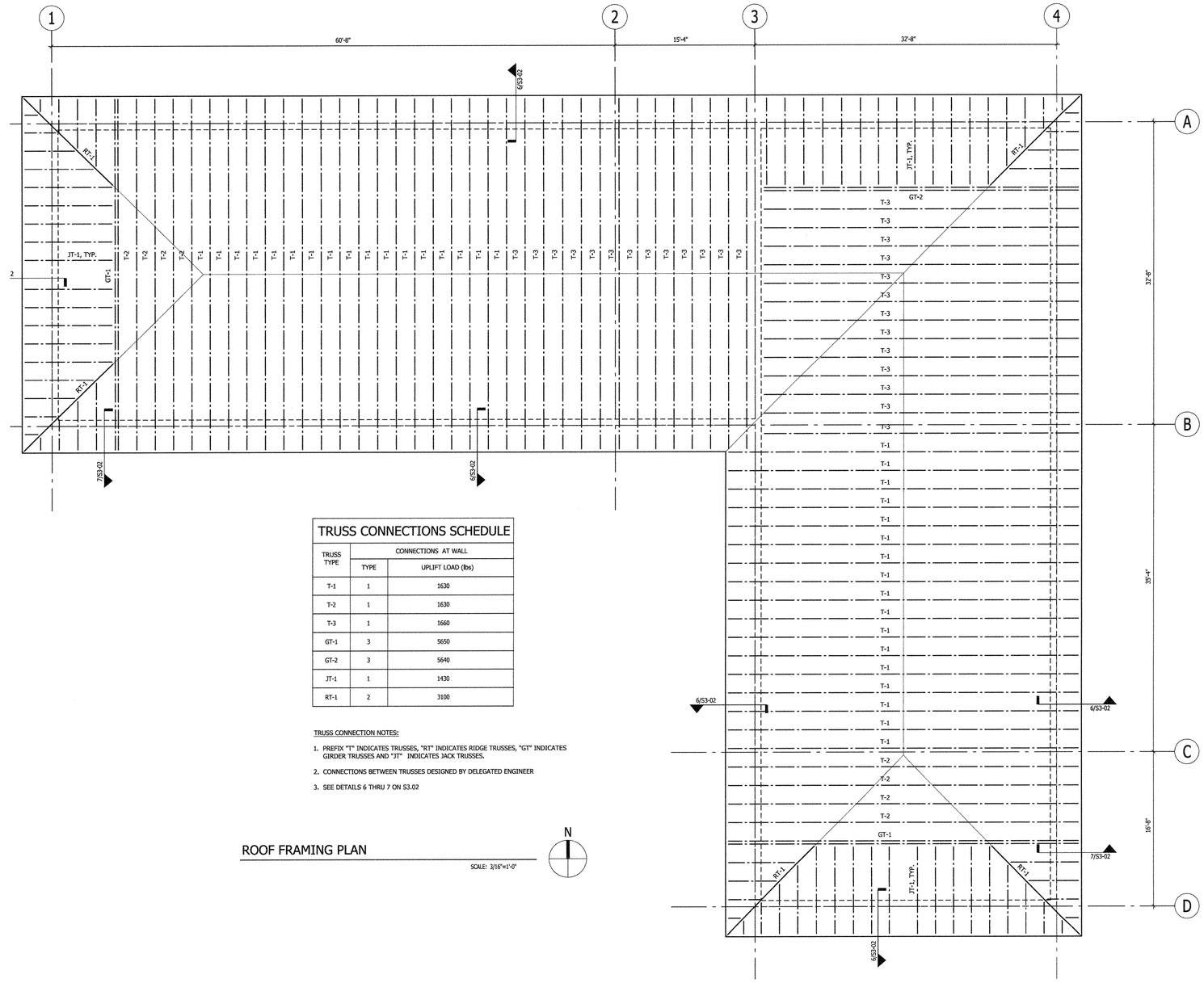

TRUSS CONNECTIONS SCHEDULE

TRUSS TYPE	CONNECTIONS AT WALL	
	TYPE	UPLIFT LOAD (lbs)
T-1	1	1630
T-2	1	1630
T-3	1	1660
GT-1	3	5650
GT-2	3	5640
JT-1	1	1430
RT-1	2	3100

TRUSS CONNECTION NOTES:

1. PREFIX "T" INDICATES TRUSSES, "RT" INDICATES RIDGE TRUSSES, "GT" INDICATES GIRDER TRUSSES AND "JT" INDICATES JACK TRUSSES.
2. CONNECTIONS BETWEEN TRUSSES DESIGNED BY DELEGATED ENGINEER
3. SEE DETAILS 6 THRU 7 ON S3.02

ROOF FRAMING PLAN

SCALE: 3/16"=1'-0"

N

WOLFBERG ALVAREZ
ARCHITECTURE ENGINEERING
3225 AVIATION AVE., SUITE 400
MIAMI, FLORIDA 33133
V 305.666.5474
F 305.666.4994
WOLFBERGALVAREZ.COM
AA 002416 EB 002354

SEMINOLE AH-THA-THI-KI STORAGE BUILDING

34450 W BOUNDARY ROAD
CLEWISTON, FL 33440

SEAL
Paul A. Zillo, P.E. Fla. Reg. No. 47013
BNI Project No. 16M16

MARCHE R. MORLOTE, A.I.A.
FL ARCHITECT
FL ARCH. REG. NO. 9564

WA PROJECT NO.: 21524.00

ISSUE DATE
05/27/2016

NO.	REVISION DATE

DRAWING TITLE

Foundation and Ground Floor Plan

SHEET NUMBER

S2.02

BLISS & NYITRAY, INC.
STRUCTURAL ENGINEERS
Certificate of Authorization No.CA 674
800 Douglas Road, Suite 300
Coral Gables Florida, 33134
Tel. (305) 442-7086 Fax (866) 832-5291
www.bnengineers.com
Paul A. Zillo, P.E. Fla. Reg. No. 47013
BNI Project No. 16M16

To the best of the Architect's or Engineer's knowledge, the plans and specifications comply with the applicable minimum codes and the applicable fire-safety standards as determined by the local authority in accordance with F.B.C. section 110.3.7.4.4 and Chapter 633, Florida Statutes.

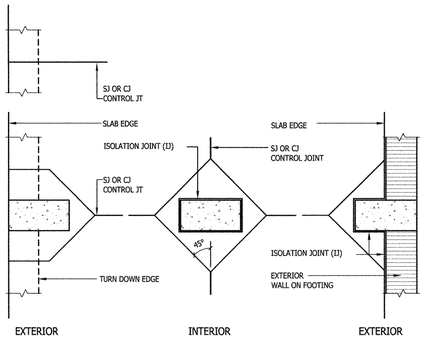

1 CONTROL JOINTS AT COLUMNS

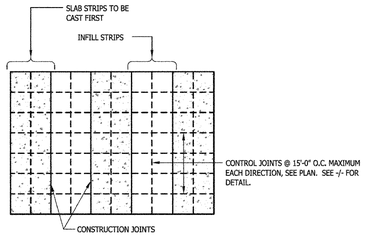

2 JOINTING PLAN
SLAB ON GRADE

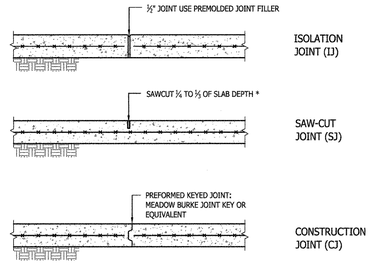

* PROVIDE SEALANT SAWCUT AS SOON AS POSSIBLE AFTER CONCRETE HARDENS. SAW CUTTING MUST BE COMPLETE WITHIN 8 HRS. AFTER POURING.

3 CONTROL JOINTS
SLAB ON GRADE

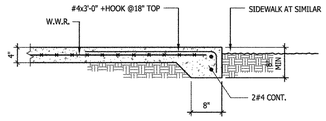

4 SLAB EDGE DETAIL

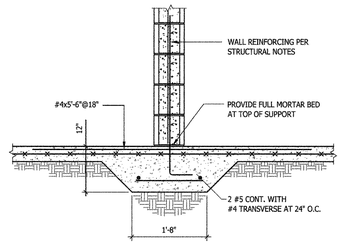

5 THICKENED SLAB DETAIL
INTERIOR WALLS

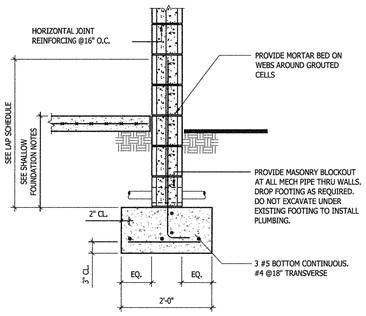

6 WALL FOOTING DETAIL

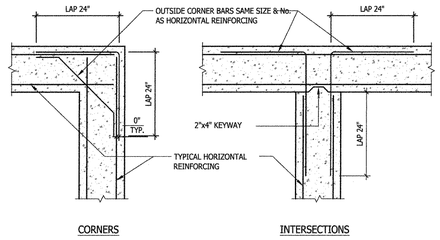

7 TYPICAL HORIZONTAL REINFORCING
CONCRETE TIE BEAMS, WALLS, AND FOOTINGS

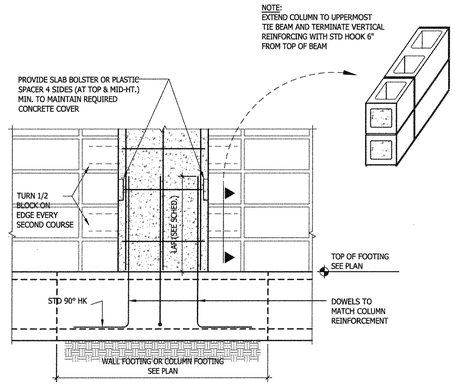

8 TYPICAL TIE COLUMN DETAIL

WOLFBERG ALVAREZ
ARCHITECTURE ENGINEERING
3225 AVIATION AVE., SUITE 400
MIAMI, FLORIDA 33133
V 305.666.5474
F 305.666.4994
WOLFBERGALVAREZ.COM
AA 002416 EB 002354

SEMINOLE AH-THA-THI-KI STORAGE BUILDING
34450 W BOUNDARY ROAD
CLEWISTON, FL 33440

Paul A. Zillio, P.E. Fla. Reg. No. 47013
BNI Project No. 14027

MARCEL B. MOHLOTE, A.I.A.
FL ARCHITECT
FL ARCH. REG. NO. 9564

WA PROJECT NO.: 21524.00

ISSUE DATE
05/27/2016

NO.	REVISION DATE

DRAWING TITLE
Ground Level Details

SHEET NUMBER
S3.01

BLISS & NYITRAY, INC.
STRUCTURAL ENGINEERS
Certificate of Authorization No.CA 674
800 Douglas Road, Suite 300
Coral Gables Florida, 33134
Tel. (305) 442-7086 Fax (866) 832-5291
www.bnienginneers.com
Paul A. Zillio, P.E. Fla. Reg. No. 47013
BNI Project No. 16M16

To the best of the Architect's or Engineer's knowledge, the plans and specifications comply with the applicable minimum codes and the applicable fire-safety standards as determined by the local authority in accordance with F.B.C. section 110.3.7.4.4 and Chapter 633, Florida Statutes.

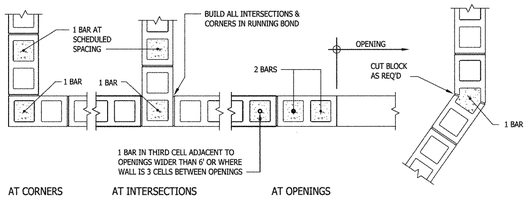

- SEE "MASONRY NOTES" FOR JOINT REINF, INCLUDING PREFABRICATED CORNERS AND TEES.
- BUILD ALL INTERSECTIONS & CORNERS IN RUNNING BOND

1 MASONRY WALL REINFORCING
NOT REQUIRED IN UN-REINFORCED WALLS

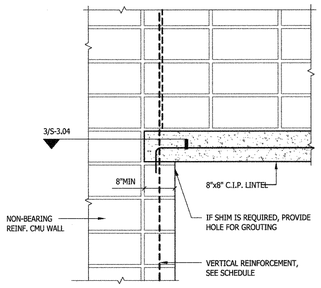

2 CONCRETE LINTEL SUPPORT

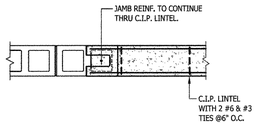

3 CONCRETE LINTEL SUPPORT
PLAN DETAIL

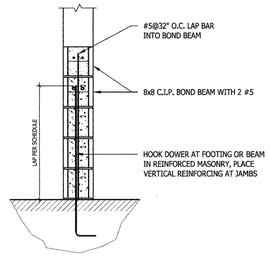

4 TYPICAL MASONRY SILL DETAIL

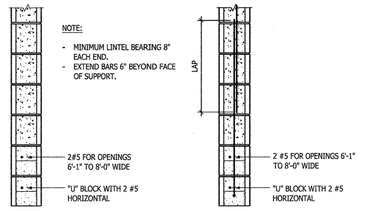

5 TYPICAL LINTEL DETAIL
SEE ARCHITECTURAL DRAWINGS FOR LOCATION

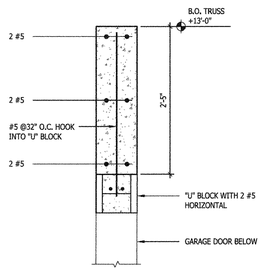

6 TRUSS CONNECTION TO CMU WALL
TYPES 1 AND 2

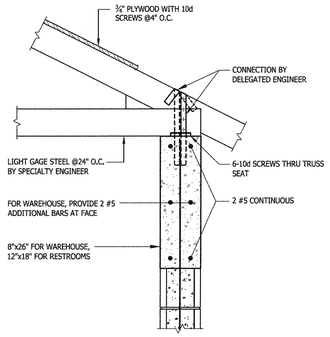

7 TRUSS CONNECTION TO CMU WALL
TYPES 1 AND 2

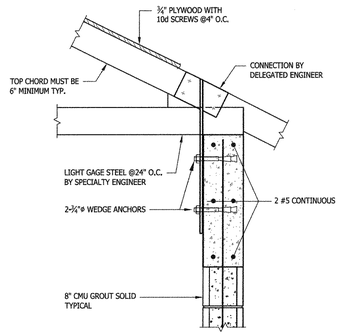

8 TRUSS CONNECTION TO TOP OF WALL
TYPE 3

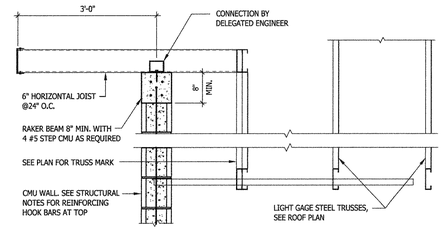

9 TYP. DETAIL @ OVERHANGS

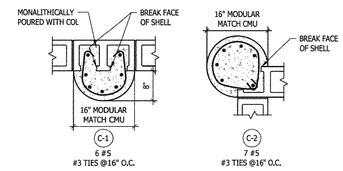

COLUMN TYPE

WOLFBERG ALVAREZ
ARCHITECTURE · ENGINEERING
3225 AVIATION AVE., SUITE 400
MIAMI, FLORIDA 33133
V 305.666.5474
F 305.666.4994
WOLFBERGALVAREZ.COM
AA 002416 EB 002354

SEMINOLE AH-THA-THI-KI STORAGE BUILDING
4450 W BOUNDARY ROAD
CLEWISTON, FL 33440

SEAL

MARCEL R. MORLOTE, A.I.A.
FL ARCHITECT
FL ARCH. REG. NO. 9564

WA PROJECT NO.: 21524.00

ISSUE DATE
05/27/2016

NO.	REVISION DATE

DRAWING TITLE
Masonry Details

SHEET NUMBER
S3.02

BLISS & NYITRAY, INC.
STRUCTURAL ENGINEERS
Certificate of Authorization No.CA 674
800 Douglas Road, Suite 300
Coral Gables Florida, 33134
Tel. (305) 442-7086 Fax (866) 832-5291
www.bnienginieers.com
Paul A. Zilio, P.E. Fla. Reg. No. 47013
BNI Project No. 16M16

To the best of the Architect's or Engineer's knowledge, the plans and specifications comply with the applicable minimum codes and the applicable fire-safety standards as determined by the local authority in accordance with F.B.C. section 110.3.7.4.4 and Chapter 633, Florida Statutes.

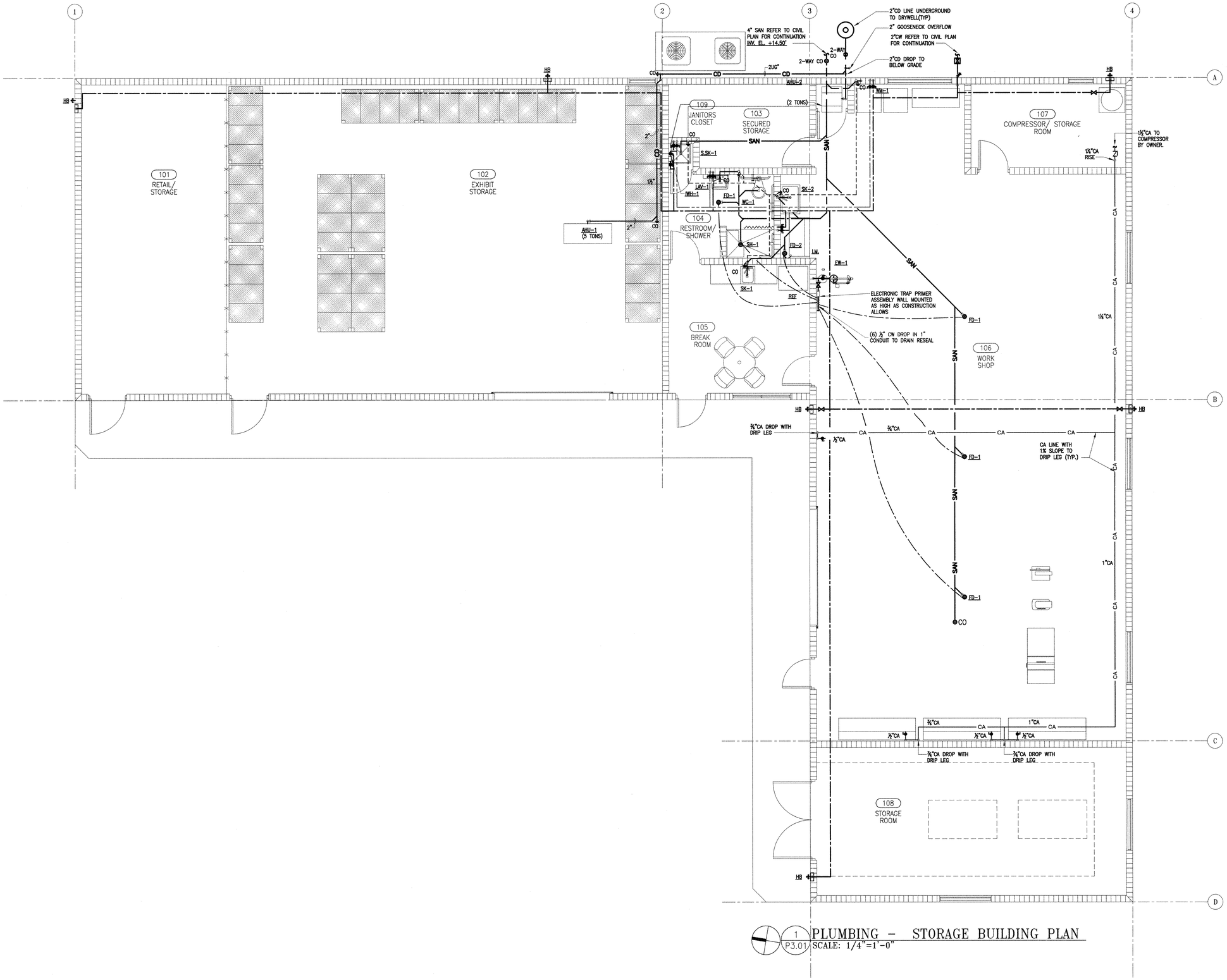

1 P3.01 PLUMBING – STORAGE BUILDING PLAN
SCALE: 1/4"=1'-0"

WOLFBERG ALVAREZ
ARCHITECTURE ENGINEERING
3225 AVIATION AVE., SUITE 400
MIAMI, FLORIDA 33133
V 305.666.5474
F 305.666.4994
WOLFBERGALVAREZ.COM
AA 002416 EB 002354

SEMINOLE AH-TAH-THI-KI STORAGE BUILDING

34450 W BOUNDARY ROAD
CLEWISTON, FL 33440

SEAL

CESAR HERRAN, P.E.
FL. MECHANICAL ENGINEER
REG. No. 71524

WA PROJECT NO.: 21524.00

ISSUE DATE
05/27/2016

NO.	REVISION DATE

DRAWING TITLE
PLUMBING STORAGE BUILDING PLAN

SHEET NUMBER
P3.01

P:\Seminoles Maintenance Building and Restrooms\2015\Drawings\CD\Storage Building\Plumbing\P3.01-SMB.dwg Jun 03, 2016 - 8:36am RBORJON

To the best of the Architect's or Engineer's knowledge, the plans and specifications comply with the applicable minimum codes and the applicable fire-safety standards as determined by the local authority in accordance with F.B.C. section 110.3.7.4.4 and Chapter 633, Florida Statutes.

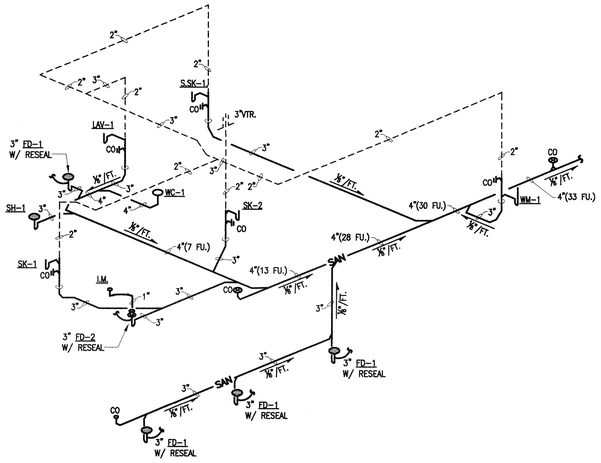

1 P5.01 SANITARY DIAGRAM STORAGE BLUILDING
NOT TO SCALE

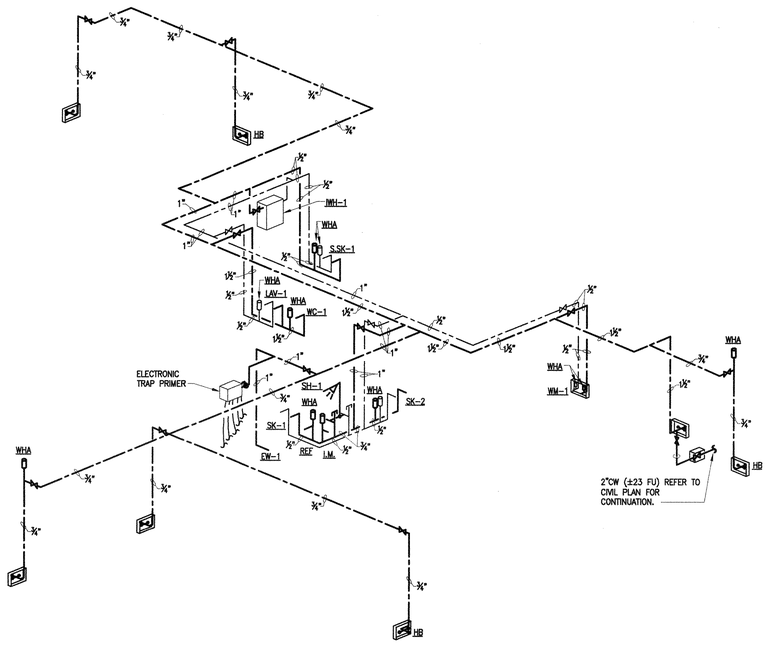

2 P5.01 DOMESTIC WATER RISER DIAGRAM STORAGE BLUILDING
NOT TO SCALE

WOLFBERG ALVAREZ
ARCHITECTURE ENGINEERING
3225 AVIATION AVE., SUITE 400
MIAMI, FLORIDA 33133
V 305.666.5474
F 305.666.4994
WOLFBERGALVAREZ.COM
AA 002416 EB 002354

SEMINOLE AH-TAH-THI-KI STORAGE BUILDING
34450 W BOUNDARY ROAD
CLEWISTON, FL 33440

SEAL
CESAR HERRAN LICENSE No. 71524 STATE OF FLORIDA PROFESSIONAL ENGINEER

CESAR HERRAN, P.E.
FL. MECHANICAL ENGINEER
REG. No. 71524

WA PROJECT NO.: 21524.00

ISSUE DATE
05/27/2016

NO.	REVISION DATE

DRAWING TITLE
ISOMETRICS

SHEET NUMBER
P5.01

P:\Seminoles Maintenance Building and Restrooms.2015\Drawings\CD\Storage Building\Plumbing\P5.01-SMB.dwg Jun 03, 2016 - 8:39am RBORJON

To the best of the Architect's or Engineer's knowledge, the plans and specifications comply with the applicable minimum codes and the applicable fire-safety standards as determined by the local authority in accordance with F.B.C. section 110.3.7.4.4 and Chapter 633, Florida Statutes.

EXISTING PANEL L1

LOCATION: STORAGE BUILDING
SUPPLIED FROM GLADES ELECTRIC
MOUNT SURFACE
NEMA: 1

PNL VOLTAGE: 120/240, 1P, 3W
PNL AIC (RMS): 35,000 A
PANEL TYPE: NF
MAIN BREAKER: 800 A

SPACE: 42
BUS: 800 A

BOLT- IN BREAKERS
FULL SOLID NEUTRAL BUS
GROUND BUS

LT	CKT NO	EQUIPMENT SERVED	WIRE COND	POLE-BKR	CONNECTED VA A	CONNECTED VA B	POLE-BKR	WIRE COND	EQUIPMENT SERVED	CKT NO	LT
A	1	LIGHTS	2#12,1#12(G),3/4"	1-20	880	305	1-20	2#12,1#12(G),3/4"	LIGHTS	2	A
A	3	LIGHTS	2#12,1#12(G),3/4"	1-20	240	800	1-20	2#12,1#12(G),3/4"	LIGHTS	4	A
A	5	EMERGENCY LIGHTS	2#12,1#12(G),3/4"	1-20	100	277	1-20	2#12,1#12(G),3/4"	EXTERIOR LIGHTS	6	A
C	7	REFRIGERATOR	2#12,1#12(G),3/4"	1-20	350	1,260	1-20	2#12,1#12(G),3/4"	RECEPTACLES	8	F
F	9	RECEPTACLES	2#12,1#12(G),3/4"	1-20	1,400	2,250	2-30	3#10,1#10(G)	DRYER	10	E
F	11	RECEPTACLES	2#12,1#12(G),3/4"	1-20	540	2,250				12	E
F	13	RECEPTACLES	2#12,1#12(G),3/4"	1-20	1,400	1,200	1-20	2#12,1#12(G),3/4"	WASHING MACHINE	14	E
E	15	WATER HEATER	3#10,1#10(G),3/4"	2-70	6,000	900	1-20	2#12,1#12(G),3/4"	RECEPTACLES	16	F
E	17				6,000	1,400	1-20	2#12,1#12(G),3/4"	RECEPTACLES	18	F
F	19	RECEPTACLES	2#12,1#12(G),3/4"	1-20	1,400	2,250	2-30	3#10,1#10(G),3/4"	ROLL-UP DOOR	20	E
F	21	ICE MACHINE	2#12,1#12(G),3/4"	1-20	350	2,250				22	E
E	23	WORK SHOP EQUIPMENT	3#12,1#12(G),3/4"	2-30	2,250	2,250	2-30	3#10,1#10(G),3/4"	WORK SHOP EQUIPMENT	24	E
E	25				2,250	2,250				26	E
B	27	MOD	2#12,1#12(G),3/4"	1-20	100	2,250	2-30	3#10,1#10(G),3/4"	COMPRESSOR EQUIPMENT	28	E
F	29	TELEPHONE/RECEPTACLES	2#12,1#12(G),3/4"	1-20	1,200	2,250				30	E
F	31	CEILING REEL	2#12,1#12(G),3/4"	1-20	1,200	52,838	2-400	(2)-3#3/0,1#3(G),2"	PANEL - L1A	32	E
F	33	CEILING REEL	2#12,1#12(G),3/4"	1-20	1,200	18,382				34	E
E	35	FIRE ALARM PANEL	2#12,1#12(G),3/4"	1-20	1,200					36	
E	37	FIRE ALARM ANUNCIATOR	2#12,1#12(G),3/4"	1-20	1,200					38	
	39						2-30	3#10,1#10(G),3/4"	TVSS	40	
	41									42	
			CONNECTED VA:		29,260	95,362					

DEMAND FACTOR: 1.00

TOTAL CONNECTED VA: 124622 AMPS: 519

TOTAL DEMAND AMPS: 517

	LOAD TYPE (LT)	CONNECTED	FACTOR	DEMAND
A	LIGHTING	2602	1.25	3253
B	AIR CONDITIONING	100	1.00	100
C	REFRIGERATION	350	1.00	350
D	KITCHEN	0	0.65	0
E	MISC. EQUIPMENT	109320	1.00	109320
F	RECPTS (1st 10 KW)	10000	1.00	10000
	(Remaining Recpt.s)	2250	0.50	1125
	TOTAL DEMAND VA:	124622	1.00	124148

Design Notes:

EXISTING PANEL L1A

LOCATION: STORAGE BUILDING
SUPPLIED FROM L1
MOUNT SURFACE
NEMA: 1

PNL VOLTAGE: 120/240, 1P, 3W
PNL AIC (RMS): 35,000 A
PANEL TYPE: NF
MAIN LUG ONLY:

SPACE: 42
BUS: 400 A

BOLT- IN BREAKERS
FULL SOLID NEUTRAL BUS
GROUND BUS

LT	CKT NO	EQUIPMENT SERVED	WIRE COND	POLE-BKR	CONNECTED VA A	CONNECTED VA B	POLE-BKR	WIRE COND	EQUIPMENT SERVED	CKT NO	LT
B	1	AHU-1	2#6,1#8(G),1"	2-60	7,250	3,813	2-40	3#12,1#12G,3/4"	AHU-2	2	B
B	3				7,250	3,813				4	B
B	5	CU-1	2#6,1#8(G),1"	2-50	13,069	1,228	2-20	2#12,1#12(G),3/4"	CU-2	6	B
B	7				13,069	1,228				8	B
B	9	EF-1A	2#12,1#12(G),3/4"	1-20	1,600	500	1-20	2#12,1#12(G),3/4"	EF-2	10	B
B	11	EF-1B	2#12,1#12(G),3/4"	1-20	1,600	500	1-20	2#12,1#12(G),3/4"	EF-3	12	B
E	13	WORK SHOP EQUIPMENT	3#10,1#10(G),3/4"	2-30	2,250	2,250	2-30	3#10,1#10(G),3/4"	WORK SHOP EQUIPMENT	14	E
E	15				2,250	2,250				16	E
E	17	WORK SHOP EQUIPMENT	3#10,1#10(G),3/4"	2-30	2,250	1,400	1-20		SPARE	18	E
E	19				2,250	1,400	1-20		SPARE	20	E
	21									22	
	23									24	
	25									26	
	27									28	
	29									30	
	31									32	
	33									34	
	35									36	
	37									38	
	39						2-30	3#10,1#10(G),3/4"	TVSS	40	
	41									42	
			CONNECTED VA:		52,838	18,382					

DEMAND FACTOR: 1.00

TOTAL CONNECTED VA: 71220 AMPS: 297

TOTAL DEMAND AMPS: 297

	LOAD TYPE (LT)	CONNECTED	FACTOR	DEMAND
A	LIGHTING	0	1.25	0
B	AIR CONDITIONING	54920	1.00	54920
C	REFRIGERATION	0	1.00	0
D	KITCHEN	0	0.65	0
E	MISC. EQUIPMENT	16300	1.00	16300
F	RECPTS (1st 10 KW)	0	1.00	0
	(Remaining Recpt.s)	0	0.50	0
	TOTAL DEMAND VA:	71220	1.00	71220

Design Notes:

PANEL "L1"
PANEL "L1A"

WOLFBERG ALVAREZ
ARCHITECTURE · ENGINEERING
3225 AVIATION AVE., SUITE 400
MIAMI, FLORIDA 33133
V 305.666.5474
F 305.666.4994
WOLFBERGALVAREZ.COM
AA 002416 EB 002354

SEMINOLE AH-TAH-THI-KI STORAGE BUILDING
34450 W BOUNDARY ROAD
CLEWISTON, FL 33440

SEAL: JULIO E. ALVAREZ, LICENSE No 14595, STATE OF FLORIDA, PROFESSIONAL ENGINEER

JULIO E. ALVAREZ, P.E.
ELECTRICAL ENGINEER
FLA. REG. NO. 14595

WA PROJECT NO.: 21524.00

ISSUE DATE
05/27/2016

NO.	REVISION DATE

DRAWING TITLE
PANEL SCHEDULES

SHEET NUMBER
E8.01

P:\Seminoles Maintenance Building and Restrooms 2015\Drawings\CD\Storage Building\Electrical\E8.01-SMB.dwg Jun 03, 2016 - 8:42am MITOLEDO

To the best of the Architect's or Engineer's knowledge, the plans and specifications comply with the applicable minimum codes and the applicable fire-safety standards as determined by the local authority in accordance with F.B.C. section 110.3.7.4.4 and Chapter 633, Florida Statutes.

PLUMBING NOTES

1. ALL WORK UNDER THIS CONTRACT SHALL COMPLY WITH THE LATEST EDITION OF THE "FLORIDA BUILDING CODE – 2014 EDITION" AND ALL APPLICABLE LOCAL ORDINANCES.
2. CONTRACTOR SHALL VISIT THE SITE AND THOROUGHLY FAMILIARIZE HIMSELF WITH AND VERIFY ALL EXISTING CONDITIONS AND REPORT ANY DISCREPANCIES TO THE ARCHITECT/ ENGINEER PRIOR TO COMMENCING WORK.
3. THE CONTRACTOR SHALL COORDINATE THE WORK OF THIS TRADE WITH ALL OTHER TRADES TO AVOID INTERFERENCE WITH THE PROGRESS OF CONSTRUCTION AND REPORT ANY DISCREPANCIES TO THE ARCHITECT/ ENGINEER.
4. THE CONTRACTOR SHALL VERIFY ALL DIMENSIONS WITH THE ARCHITECTURAL PLANS.
5. ALL WORK SHALL BE PERFORMED BY A LICENSED PLUMBING CONTRACTOR IN A FIRST CLASS WORKMANLIKE MANNER. THE COMPLETE SYSTEM SHALL BE FULLY OPERATIVE.
6. ALL AUTOMATIC ELECTRIC WATER HEATER SHALL MEET THE STANDARDS OF THE LATEST ENERGY EFFICIENCY CODE.
7. VERIFY THE LOCATION, SIZE AND ELEVATION OF ALL UTILITIES PRIOR TO BEGINNING CONSTRUCTION. ADVISE ARCHITECT/ ENGINEER OF ANY DISCREPANCIES.
8. DRAWINGS ARE DIAGRAMMATIC. DO NOT SCALE DRAWINGS FOR THE EXACT LOCATION OF FIXTURES AND PIPING.
9. SHUT OFF VALVES SHALL BE PROVIDED AT ALL PLUMBING FIXTURES.
10. PROVIDE DIELECTRIC UNIONS WHERE DISSIMILAR METALS ARE JOINED.
11. ESCUTCHEONS SHALL BE CHROME PLATED BRASS WITH LOCKING SCREWS WHERE PIPES PASS THROUGH FINISHED WALLS.
12. A CLEAN OUT SHALL BE PROVIDED AT THE BASE OF EACH SOIL, STORM AND WASTE STACK.
13. ALL 3" OR BIGGER HORIZONTAL BRANCHES, SEWER AND DRAIN SHALL BE SLOPED AT A MINIMUM OF 1/8"IN/FT AND 2" OR SMALLER SHALL BE AT 1/4"IN/FT UNLESS OTHERWISE INDICATED ON PLANS.
14. EVERY FIXTURE CONNECTED TO THE DRAINAGE SYSTEM SHALL BE EQUIPPED WITH A WATER SEAL TRAP.
15. PLUMBING FIXTURES SHALL COMPLY WITH WATER CONSERVATION FS.553.14.
16. ALL HOT WATER PIPES SHALL BE INSULATED.
17. ALL EXPOSED PIPING WITHIN TOILET ROOMS SHALL BE CHROME PLATED.
18. INSULATED EXPOSED DRAIN AND WATER PIPING OF THE HANDICAPPED LAVATORY.
19. SINK SK–1 MAXIMUM DEPTH SHALL NOT EXCEED 6 1/2" FOR ADA COMPLIANCE
20. ESCUTCHEONS SHALL BE CHROME PLATED BRASS WITH LOCKING SCREWS WHERE PIPES PASS THROUGH FINISHED WALLS.
21. A CLEAN OUT SHALL BE PROVIDED AT THE BASE OF EACH SOIL AND WASTE STACK.
22. AS PER FBC–PLUMBING 606.3, PROVIDE ACCESS TO ALL SHUT–OFF VALVES.
23. PROVIDE SHUT–OFF VALVES IN COMPLIANCE WITH FBC–PLUMBING, 606.1.
24. FOR FIRE RATED WALL PENETRATION DETAIL REFER TO ARCHITECTURAL PLANS.

1 PLUMBING NOTES
P6.01 SCALE: N.T.S.

PLUMBING LEGEND

SYMBOL	DESCRIPTION	SYMBOL	DESCRIPTION	SYMBOL	DESCRIPTION
CA	COMPRESSED AIR LINE		AIR CHAMBER	AD	AREA DRAIN
CA	EXISTING COMPRESSED AIR LINE	WHA	WATER HAMMER ARRESTOR	ABV.	ABOVE
CW	EXISTING COLD WATER LINE (CW)			AFC	ABOVE FINISH CEILING
	NEW COLD WATER LINE (CW)		BALANCING VLV. W/ INDICATOR	BLW	BELOW
T	NEW TEMPERED WATER LINE (T)		BALL VALVE	C.B.	CATCH BASIN
CD	NEW CONDENSATE DRAIN LINE		CHECK VALVE	CEIL., CLG.	CEILING
CD	EXISTING CONDENSATE DRAIN LINE		GATE VALVE	E.W.C.	ELECTRIC WATER COOLER
G	EXISTING GAS LINE	G	GAS COCK VALVE	E.W.H.	ELECTRIC WATER HEATER
G	GAS LINE		SOLENOID VALVE	F.D.V.	FIRE DEPARTMENT VALVE
GW	GREASE WASTE		VALVE IN BOX	FL.	FLOOR
GW	EXISTING GREASE WASTE	VIV	GATE VALVE IN VERTICAL	F.U.	FIXTURE UNIT
HW	EXISTING HOT WATER LINE (HW)	HB	HOSE BIBB W/ BACK FLOW PREVENTER AND SHUT–OFF VALVE.	F.S.	FLOOR SINK
	NEW HOT WATER LINE (HW)			G.W.H.	GAS WATER HEATER
HWR	EXISTING HOT WATER RECIRCULATING LINE (HWR)		UNION	GD	GUTTER DRAIN
	INDIRECT SAFE WASTE (IW)	FD	FLOOR DRAIN W/ TRAP RESEAL	R.W.L.	RAIN WATER LEADER
PR	PRESSURE & TEMPERATURE RELIEF LINE	RD	ROOF DRAIN	TP	TRAP PRIMER
PD	PAN DRAIN		FLOOR SINK FULL GRATE (FS)	(UG)	UNDERGROUND
SAN	EXISTING SANITARY LINE (SAN)		FLOOR SINK W/ HALF GRATE (FS)	V.T.R.	VENT THRU ROOF
	NEW SANITARY WASTE LINE (SAN)		FLOOR SINK W/ 3/4 GRATE (FS)	VB	VACUUM BREAKER
V	EXISTING VENT LINE (V)		STEAM TRAP	WH	WATER HEATER
V	SANITARY VENT LINE (V)	FCO	FLOOR CLEAN OUT	VFD	VARIABLE FRECUENCY DRIVE
SD	EXISTING STORM DRAIN LINE	WCO	WALL TO CLEAN OUT		
SD	NEW STORM DRAIN LINE		CONNECT TO EXISTING		
HWC	HOT WATER CIRCULATING PIPING		END OF DEMOLITION		
HWR	HOT WATER RETURN		TAMPER SWITCH		
STM	STEAM PIPING		FLOW SWITCH		
80 PSIG	STEAM SUPPLY. FIGURE INDICATES OPERATING PRESSURE.	W O	RISER ID.		
FW	BOILER FEED WATER		LINE TO BE DEMOLISHED / REMOVED		
	ARROW INDICATES DIRECTION OF PIPE PITCH DOWNWARD				

NOTE:
THIS IS A GENERAL LEGEND FOR SYMBOLS APPLICABLE TO THIS PROJECT, REFER TO THE DRAWINGS.

2 PLUMBING LEGEND
P6.01 SCALE: N.T.S.

PLUMBING FIXTURE CONNECTION SCHEDULE

MARK	DESCRIPTION	WASTE	CW	HW	FLOW RATES	REMARKS
WC–1	WATER CLOSET	4"	1"	–	1.28 GPF	BATTERY OPERATED FLUSH VALVE/FLOOR MTD./ADA COMPLIANT/AMERICAN STD. VITREOUS CHINA MADERA 3451.528, FAUCET FLOWISE #6065.121.002
LAV–1	LAVATORY	1 1/4"	1/2"	1/2"	0.5 GPM	WALL MOUNTED / ADA COMPLIANT COUNTERTOP LAVATORY
S.SK–1	SERVICE SINK	3"	1/2"	1/2"	1.5 GPM	SERVICE SINK WITH TRAP STANDARD (FLOOR MOUNTED)
REF	REFRIGERATOR	–	1/2"	–	–	PROVIDE REFRIGERATOR / ICE MAKER RECEPTACLE OUTLET BOX BEHIND REFRIGERATOR.
SK–1 SK–2	SINK	1 1/2"	1/2"	1/2"	1.0 GPM	SINGLE COMPARTMENT SINK / ADA COMPLIANT
I.M.	ICE MAKER	–	1/2"	–	–	PROVIDE ICE MAKER RECEPTACLE OUTLET BOX BEHIND ICE MAKER.
WM.	WASHING MACHINE	2"	1/2"	1/2"	–	PROVIDE WASHING MACHINE RECEPTACLE OUTLET BOX.
HB	HOSE BIBB / WALL HYDRANT	–	1/2"	–	–	WALL HYDRANT W/ COVER
SH–1	SHOWER	2"	1/2"	1/2"	–	ADA COMPLIANT FULLY EQUIPPED WITH GRAB BARS, SEAT, PRESSURE BALANCING MIXING VALVE, HAND–HELD SHOWER HEAD WITH SIDE BAR. SHOWER MODEL # 1064372 RSADA,

** FROM TABLE 604.4 MIAMI DADE COUNTY ORDINANCE III, SEC. 08–31 MAXIMUM WATER CONSUMPTION FLOW RATES AND QUANTITIES FOR PLUMBING FIXTURES, FIXTURE FITTINGS AND APPLIANCES.

INSTANT WATER HEATER SCHEDULE

MARK	MANUFACTURER	MODEL	GALLON CAPACITY	RECOVERY GPH EACH	ELECTRICAL	REMARKS
EWH–1	TITAN HEATER	N–160	–	–	12.0 KW , 208V 1ϕ, 60AMP	JANITOR CLOSET

WATER HAMMER ARRESTOR (WHA) SELECTOR CHART

HYDRA–RESTER TYPE NO.	652–A	653–B	654–C	655–D	656–E	657–F
P.D.I. SYMBOLS *	A	B	C	D	E	F
FIXTURE–UNITS RATING	1–11	12–32	33–60	61–113	114–154	155–330

* CLASSIFICATION ESTABLISHED BY THE PLUMBING AND DRAINAGE INSTITUTE "STANDARD P.D.I.– WH201"

* HYDRA–RESTER TYPE IS BASED ON "SIOUX CHIEF" PRODUCT.

SLOPE OF HORIZONTAL DRAINAGE PIPE

SIZE (inches)	MINIMUM SLOPE (inch per foot)
2 or less	1/4
3 to 6	1/8
8 or larger	1/16

SLOPE PER TABLE 704.1 FBC/P 2010 (UNLESS OTHERWISE NOTED)

3 PLUMBING SCHEDULES
P6.01 SCALE: N.T.S.

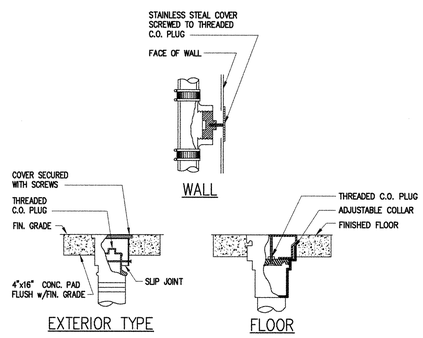

4 TYPICAL CLEANOUT DETAIL
P6.01 SCALE: N.T.S.

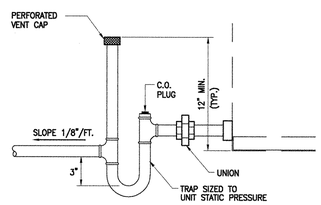

5 CONDENSATE TRAP DETAIL
P6.01 SCALE: N.T.S.

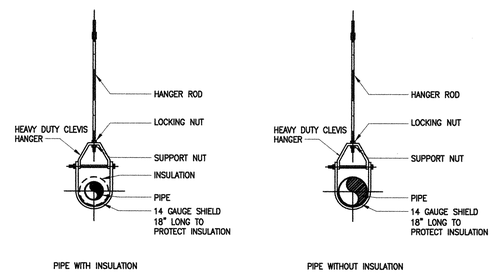

6 PIPE HANGER– CLEVIS TYPE DETAIL
P6.01 SCALE: N.T.S.

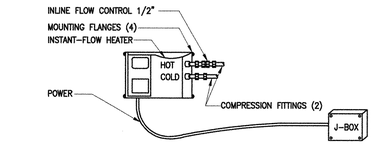

TECHNICAL SPECIFICATIONS (SPECS)

COMPLIANCE: UL #499 STANDARDS: ANZI–Z, 10,03
TESTED: APPLIED RESEARCH #29.580
MATERIALS: BRASS CASING
PIPE FITTING: 1/2"
STANDARD PRESSURE REQUIRED: 5–150 PSI
ELEMENTS: DUAL INCOLOY NICRHOME
ENERGY EFFICIENCY: UP TO 99.5 %
ACTIVATION: 0.4 GPM–ON/0.3 GPM–OFF
INDICATORS: RED=ON/AMBER=STANDBY

INSTANT WATER HEATER TEMPERATURE RISE CHART (° FAHRENHEIT)

GPM Flow	1.0	1.5	2.0	2.5	3.0	3.5
(NW-I) TEMP RISE	109°	73°	55°	44°	36°	31°

NOTES: GPM – GALLONS PER MINUTE. DEGREES (°) FAHRENHEIT. VALUES ARE APPROXIMATE.

7 INSTANTWATER HEATER DETAIL
P6.01 SCALE: N.T.S.

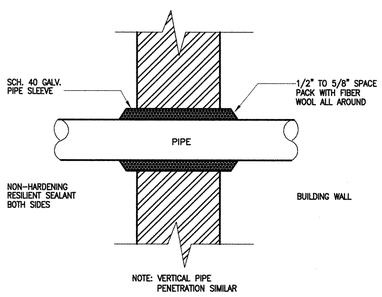

NOTE:
FOR FIRE RATED WALL PENETRATION DETAIL REFER TO ARCHITECTURAL DRAWINGS.

8 PIPING WALL PENETRATION DETAIL
P6.01 SCALE: N.T.S.

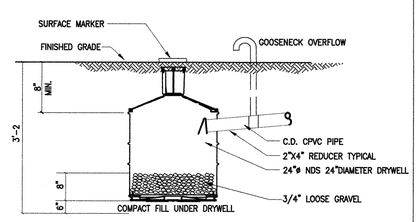

9 TYPICAL DRYWELL DETAIL
P6.01 SCALE: N.T.S.

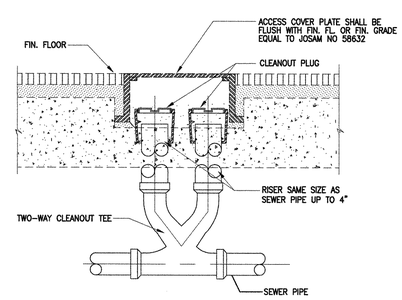

10 TWO WAY CLEANOUT DETAIL
P6.01 SCALE: N.T.S.

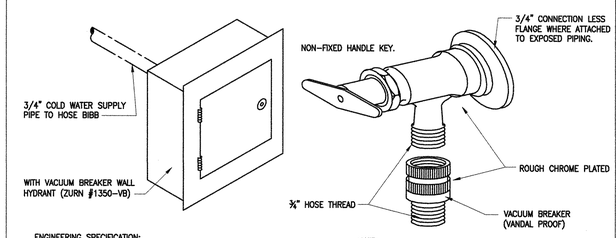

ENGINEERING SPECIFICATION:
ZURN Z1350 ENCASED MODERATE CLIMATE WALL HYDRANT FOR NARROW WALL INSTALLATION. COMPLETE WITH BRONZE BODY, ALL BRONZE INTERIOR PARTS, REPLACEABLE SEAT WASHER, SCREWDRIVER OPERATED STOP VALVE IN SUPPLY, KEY OPERATED CONTROL VALVE, AND 3/4 [19] IP FEMALE INLET AND 3/4 [19] MALE HOSE CONNECTION STANDARD. ADJUSTABLE STAINLESS STEEL BOX FURNISHED WITH HINGED COVER, CYLINDER LOCK AND "WATER" STAMPED ON COVER.

NOTE:
PROVIDE SHUT–OFF VALVE & VACUUM BREAKER.

NOTE:
THE ADJUSTABLE SLEEVE ON THE STAINLESS STEEL BOX IS PROVIDED WITH A GASKET AS STANDARD, BUT ADDITIONAL CAULKING OF ALL INSIDE JOINTS IS REQUIRED (BY OTHERS) AFTER THE HYDRANT BOX HAS BEEN PROPERLY SET. CAULKING SHOULD BE PERFORMED ON ALL OPEN SEAMS, INCLUDING THE SEAMS WHERE THE GASKET IS PRESENT

11 WALL HYDRANT BOX DETAIL
P6.02 SCALE: N.T.S.

To the best of the Architect's or Engineer's knowledge, the plans and specifications comply with the applicable minimum codes and the applicable fire–safety standards as determined by the local authority in accordance with F.B.C. section 110.3.7.4.4 and Chapter 633, Florida Statutes.

WOLFBERG ALVAREZ
ARCHITECTURE · ENGINEERING
3225 AVIATION AVE., SUITE 400
MIAMI, FLORIDA 33133
V 305.666.5474
F 305.666.4994
WOLFBERGALVAREZ.COM
AA 002416 EB 002354

SEMINOLE AH-TAH-THI-KI STORAGE BUILDING
34450 W BOUNDARY ROAD
CLEWISTON, FL 33440

SEAL
CESAR HERRAN LICENSE No. 71524 STATE OF FLORIDA PROFESSIONAL ENGINEER
05/27/2016

CESAR HERRAN, P.E.
FL. MECHANICAL ENGINEER
REG. No. 71524

WA PROJECT NO.: 21524.00
ISSUE DATE
05/27/2016

NO.	REVISION DATE

DRAWING TITLE
NOTES, SCHEDULES & DETAILS

SHEET NUMBER
P6.01

P:\Seminoles Maintenance Building and Restrooms.2015\Drawings\CD\Storage Building\Plumbing\P6.01-SMB.dwg Jun 03, 2016 - 8:41am RBORJON

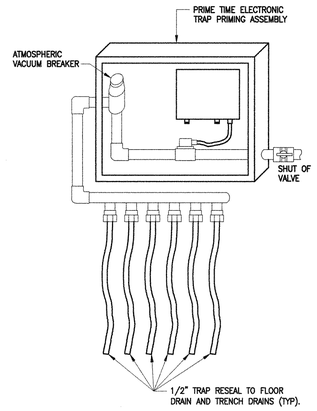

1 P6.02 AUTOMATIC TRAP PRIMER DETAIL
SCALE: N.T.S.

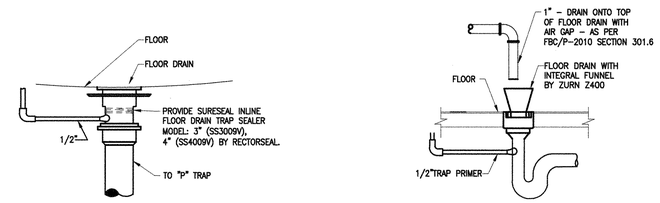

2 P6.02 TRAP RESEAL DETAIL
SCALE: N.T.S.

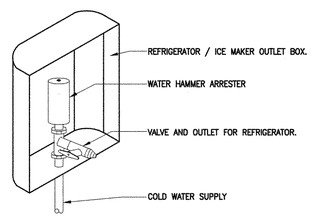

3 P6.02 REF / ICE MAKER OUTLET BOX DETAIL
SCALE: N.T.S.

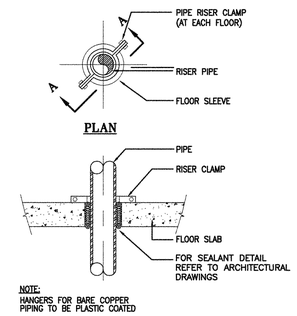

4 P6.02 PIPE RISER CLAMP DETAIL
SCALE: N.T.S.

WOLFBERG ALVAREZ
ARCHITECTURE ENGINEERING
3225 AVIATION AVE., SUITE 400
MIAMI, FLORIDA 33133
V 305.666.5474
F 305.666.4994
WOLFBERGALVAREZ.COM
AA 002416 EB 002354

SEMINOLE AH-TAH-THI-KI STORAGE BUILDING
34450 W BOUNDARY ROAD
CLEWISTON, FL 33440

SEAL
CESAR HERRAN LICENSE No. 71524 STATE OF FLORIDA PROFESSIONAL ENGINEER

CESAR HERRAN, P.E.
FL MECHANICAL ENGINEER
REG. No. 71524

WA PROJECT NO.: 21524.00

ISSUE DATE
05/27/2016

NO.	REVISION DATE

DRAWING TITLE
NOTES, SCHEDULES & DETAILS

SHEET NUMBER
P6.02

P:\Seminoles Maintenance Building and Restrooms 2015\Drawings\CD\Storage Building\Plumbing\P6.02-SMB.dwg Jun 03, 2016 - 8:46am RIBORON

To the best of the Architect's or Engineer's knowledge, the plans and specifications comply with the applicable minimum codes and the applicable fire-safety standards as determined by the local authority in accordance with F.B.C. section 110.3.7.4.4 and Chapter 633, Florida Statutes.

FAN SCHEDULE

UNIT DESIGNATION	EF-1A	EF-1B	EF-2	EF-3	
AREA SERVED	WORKSHOP #106	WORKSHOP #106	STORAGE #108	ROOMS #109, 104 AND 107	
SERVICE	EXHAUST	EXHAUST	EXHAUST	EXHAUST	
FAN TYPE	PROPELLER WALL FAN	PROPELLER WALL FAN	PROPELLER WALL FAN	IN-LINE BLOWER GEMINI	
DRIVE TYPE	BELT	BELT	DIRECT	DIRECT	
TOTAL AIR, CFM	4250	4250	1150	400	
EXTERNAL STATIC PRESS., IN. W.G.	0.33	0.33	0.33	0.5	
FAN SPEED, RPM	1059	1059	860	1500	
dBA/SOUND SONES	68/18.1	68/18.1	64/13.2	45/3.5	
FAN MOTOR HP (NON-OVERLOAD)	3/4	3/4	1/6	1.85 AMPS	
ELECTRICAL SERVICE REQUIRED	120/1/60	120/1/60	120/1/60	120/1/60	
OPERATING WEIGHT, LBS.	200	200	225	44	
NOTES AND ACCESSORIES	1 3 4 5	1 3 4 5	1 3 4 5	1 2 4 5 6	
DESIGN MANUFACTURER	COOK	COOK	COOK	COOK	
DESIGN MANUFACTURER'S NUMBER	24EW622B	24EW622B	24EW614D08	GN-642	

NOTES AND ACCESSORIES:

1. SERVICE SWITCH/DISCONNECT SWITCH
2. WIRED THROUGH LIGHT SWITCH.
3. OSHA APPROVED WIREGUARD-MOTOR SIDE AND PROPELLER SIDE
4. PROVIDE MFGR. PRE-WIRED SOLID STATE SPEED CONTROLLER.
5. GRAVITY BACKDRAFT DAMPER
6. INTERLOCK WITH AIR CONDITIONING UNIT

SPLIT SYSTEM A/C UNIT SCHEDULE

	UNIT DESIGNATION	AHU-1	AHU-2
	AREA SERVED	EXHIBIT STO. 102 RETAIL STO. 101	SECURED STO. 103 BREAK ROOM 105 RESTRM/SHOWER 104
	REFRIGERANT TYPE	PURON R-410A	PURON R-410A
BLOWER-COIL UNIT	LOCATION	ABOVE CEILING	ABOVE CEILING
	OPERATING WEIGHT, POUNDS	207	150
	DESIGN MANUFACTURER / MODEL NO.	24ACB760A003	24ACB724A003
	TOTAL AIR, CFM	2000	800
	OUTSIDE AIR, CFM	230	50
	EXTERNAL STATIC PRESSURE IN W.G.	0.30	0.30
	FAN MOTOR HP (NON-OVERLOAD)	3/4	1/2
	ELECTRICAL SERVICE-VOLTS /PH/HZ	208/1ø/60Hz	208/1ø/60Hz
	TOTAL CAPACITY, MBh	56.50	22.09
	SENSIBLE CAPACITY, MBh	43.45	16.49
	ENTERING AIR TEMPERATURE, °F DB/ WB	75/63	75/63
	LEAVING AIR TEMPERATURE, °F DB/ WB	54.88/53.32	55.91/53.56
FILTER	TYPE	THROWAWAY	THROWAWAY
	EFFICIENCY	MERV 13	MERV 13
	THICKNESS	2"	2"
CONDENSING UNIT	UNIT DESIGNATION	CU-1	CU-2
	LOCATION	GRADE	GRADE
	NUMBER OF COMPRESSORS	1 SCROLL	1 SCROLL
	CONDENSER FAN-TYPE	PROPELLER	PROPELLER
	SEER / EER	17.0 /13.0	16.5 / 13.0
	MINIMUM CIRCUIT AMPACITY	30.06	13.58
	ELECTRICAL SERVICE REQUIRED	208/1ø/60Hz	208/1ø/60Hz
	DESIGN MANUFACTURER / MODEL NO.	FV4CNB006L00	FV4CNF003L00
	OPERATING WEIGHT, POUNDS	375	222
HEATER	UNIT DESIGNATION	FACTORY INSTALLED	FACTORY INSTALLED
	HEATER CAPACITY	10 KW	5 KW
	NUMBER OF STEPS	2	2
	ELECTRICAL SERVICE REQUIRED	208/1ø/60Hz	208/1ø/60Hz
	DESIGN MANUFACTURER	CARRIER 5	CARRIER 5
	NOTES & ACCESSORIES	1 2 3 4 6 7	1 2 3 4 6 7
	DESIGN MANUFACTURER	CARRIER	CARRIER

NOTES AND ACCESSORIES:

1. SIZE CIRCUITS REFRIGERANT PIPING AS PER MANUFACTURER'S RECOMMENDATIONS.
2. INSULATE BLOWER CASING PER FLORIDA ENERGY CODE.
3. PROVIDE SIGHT GLASS / MOISTURE INDICATOR / LIQUID LINES DRIERS / LOW/HIGH PRESSURE SWITCH.
4. PROVIDE LIQUID LINE SOLENOID VALVES REQUIRED IF PIPING EXCEED 50 FT. OF REFRIGERANT LINES.
5. ELECTRIC HEATER SHALL BE PROVIDED BY AIR HANDLING UNIT MANUFACTURER.
6. AHU COOLING COIL REFRIGERANT CIRCUITS SHALL BE INTERLACE AND INTERTWINED.
7. PROVIDE MANUFACTURER'S 7-DAY PROGRAMMABLE THERMOSTAT FOR EACH NEW INSTALLED SYSTEM.

OVERFLOW AUXILIARY PROTECTION:

AS PER FBC (MECHANICAL) 307.2.3-4. A WATER LEVEL DETECTION DEVICE CONFORMING TO UL508 SHALL BE PROVIDED THAT WILL SHUT-OFF THE EQUIPMENT SERVED IN THE EVENT THAT THE PRIMARY DRAIN IS BLOCKED. THE DEVICE SHALL BE INSTALLED IN THE EQUIPMENT DRAIN PAN LOCATED AT A POINT HIGHER THAN PRIMARY DRAIN LINE CONNECTION AND BELOW THE OVERFLOW RIM OF SUCH PAN

NOTE:

ALL CONDENSING UNITS UNITS SHALL HAVE THE CASINGS AND THE CONDENSER COIL COATED WITH SURFIL R10 APPLIED BY ADVANCOAT MIAMI, FLORIDA, 305-790-9925, OR EQUIVALENT

HVAC SYSTEM REQUIREMENTS

HVAC DESIGN REQUIRES:	YES	NO
DUCT SMOKE DETECTOR	✓	
FIRE DAMPER (S)	✓	
SMOKE DAMPER (S)	✓	
FIRE RATED ENCLOSURE	✓	
FIRE RATED ROOF/FLOOR CEILING ASSEMBLY	✓	
FIRE STOPPING	✓	
SMOKE CONTROL	✓	

HVAC SYMBOLS AND ABBREVIATIONS

ABBREVIATIONS

AFF	ABOVE FINISHED FLOOR
AP	ACCESS PANEL
A/C	AIR CONDITIONING UNIT
ACCU	AIR COOLED CONDENSING UNIT
AHU	AIR HANDLING UNIT
ARCH	ARCHITECTURAL
BD	BACKDRAFT DAMPER
BTU	BRITISH THERMAL UNIT
CLG	CEILING
CD	CEILING DIFFUSER
CU	CONDENSING UNIT
CFM	CUBIC FEET PER MINUTE
DN	DOWN
DWG	DRAWING
DB	DRY BULB
EA	EACH
EXH	EXHAUST
EF	EXHAUST FAN
FD	FIRE DAMPER
MVD	MANUAL VOLUME DAMPER
MAX.	MAXIMUM
MECH	MECHANICAL
MOD	MOTOR OPERATED DAMPER
OBD	OPPOSED BLADE DAMPER
O/A	OUTSIDE AIR
PSI	POUNDS PER SQUARE INCH
R/A	RETURN AIR
RG	RETURN GRILLE
RR	RETURN REGISTER
RPM	REVOLUTIONS PER MINUTE
S/D	SMOKE DAMPER
S/A	SUPPLY AIR
SF	SUPPLY FAN
SG	SUPPLY GRILLE
SR	SUPPLY REGISTER
TYP	TYPICAL

DUCTWORK

MVD — MANUAL VOLUME DAMPER
FD — FIRE DAMPER
SD — SMOKE DETECTOR
BDD — BACKDRAFT DAMPER
MOD — MOTOR OPERATED DAMPER
ROUND DUCT
SECTION SYMBOL
SECTION No.
SHEET WHERE SHOWN
SUPPLY OR PRECONDITIONED OUTSIDE AIR DUCT
RETURN AIR DUCT
EXHAUST AIR DUCT
ACCESS PANEL
VANED ELBOW
RADIUS ELBOW — R=1.5Dia.
CEILING DEVICE TYPE
A CFM — AIR QUANTITY
CEILING DIFFUSER, 4-WAY UNLESS SHOWN OTHERWISE
CEILING OR SIDEWALL LINEAR DIFFUSER
T — THERMOSTAT
NEW DUCTWORK
R — RISE IN DUCT IN THE DIRECTION OF AIRFLOW
D — DROP IN DUCT IN THE DIRECTION OF AIRFLOW
FLEXIBLE CONNECTION
90 BRANCH TAKE-OFF W/MVD
FLEXIBLE DUCT

NOTES:

1- THIS IS A MASTER SHEET: FOR SYMBOLS APPLICABLE TO THIS PROJECT REFER TO THE DRAWINGS.

2- REFER TO ARCHITECTURAL REFLECTED CEILING PLANS FOR ACTUAL LOCATION OF ALL AIR DISTRIBUTION DEVICES AND ACCESS PANELS.

3- ALL DUCT DIMENSIONS ARE CLEAR INSIDE DIMENSIONS.

4- COORDINATE ALL ROOF PENETRATIONS W/STRUCTURAL/ARCHITECTURAL DRAWINGS.

AIR DISTRIBUTION DEVICE SCHEDULE

TYPE	CFM RANGE	DESCRIPTION SERVICE	NECK SIZE IN.	FACE SIZE IN.	DESCRIPTION FACE TYPE	N.C.	REMARKS
A1	0 – 135	SUPPLY	6	24x24	SQUARE PANEL	25	CEILING SUPPLY DIFFUSER
A2	140 – 240	SUPPLY	8	24x24	SQUARE PANEL	25	CEILING SUPPLY DIFFUSER
A3	245 – 380	SUPPLY	10	24x24	SQUARE PANEL	25	CEILING SUPPLY DIFFUSER
A4	0 – 135	SUPPLY	6	12x12	SQUARE PANEL	25	CEILING SUPPLY DIFFUSER
B1	0 – 1000	RETURN	22x22	24x24	EGG CRATE	25	CEILING RETURN REGISTER
B2	0 – 1000	RETURN	22x22	24x24	EGG CRATE	25	FILTER CEILING RETURN REGISTER
C1	240 – 500	SUPPLY	18x8	–	DOUBLE DEFLECTION	25	SIDEWALL SUPPLY REGISTER
D1	0 – 100	EXH./RETURN	8x6	–	FIXED 45° HORIZ. BARS	25	SIDEWALL RETURN REGISTER
D2	240 – 500	EXH./RETURN	18x8	–	FIXED 45° HORIZ. BARS	25	SIDEWALL RETURN REGISTER
E1	0 – 1000	EXHAUST	12x12	12x12	EGG CRATE	25	CEILING RETURN REGISTER

BASIS OF DESIGN:
A – MANUFACTURER: METALAIRE SERIES 5750
B1– MANUFACTURER: METALAIRE SERIES CC5
B2– MANUFACTURER: METALAIRE SERIES CC5F
C – MANUFACTURER: METALAIRE MODEL H4004
D – MANUFACTURER: METALAIRE MODEL H402R
E – MANUFACTURER: METALAIRE SERIES CC5

NOTES:

1. PROVIDE SQUARE OR RECTANGULAR TO ROUND TRANSITION WHERE REQUIRED.
2. PROVIDE OPPOSED BLADE DAMPER FOR ALL AIR DEVICES.
3. EGGCRATE DEVICES SHALL BE THE SIZE OF FULL FACE SIZE
4. YOUNG REGULATORS SHALL BE PROVIDED AT ALL CEILING DEVICES LOCATED IN NON ACOUSTICAL TILE CEILINGS AND/OR IN ALL OTHER LOCATIONS WHERE ACCESS THROUGH ACOUSTICAL CEILINGS IS NOT AVAILABLE.

OUTSIDE AIR CALCULATIONS (FBC-M TABLE 403.3) (ASHRAE 62.1-2010)

UNIT	ZONE TYPES	ZONE AREAS S.F.	CFM/SF	CFM/P	P/100 SF	CALCULATED O/A	DESIGN O/A	EXHAUST
AHU-1	EXHIBIT STORAGE – 102	1900	0.12	5	0	228	230	–
AHU-2	BREAK ROOM – 105	195	0.06	5	4	30	–	–
	SECURE STORAGE – 103	118	0.12	5	0	15	–	–
	TOTAL O/A	–	–	–	–	45	50	

NOTES:

1 CALCULATIONS ARE BASED ON ESTIMATED MAX. OCUPPANCY RATES PER ARCHITECTURAL PLANS AND VENTILATION RATES PER THE FLORIDA BUILDING CODE/ MECHANICAL BASED IN ASHRAE 62.1.

WOLFBERG ALVAREZ
ARCHITECTURE · ENGINEERING
3225 AVIATION AVE., SUITE 400
MIAMI, FLORIDA 33133
V 305.666.5474
F 305.666.4994
WOLFBERGALVAREZ.COM
AA 002416 EB 002354

SEMINOLE AH-TAH-THI-KI STORAGE BUILDING
34450 W BOUNDARY ROAD
CLEWISTON, FL 33440

SEAL
CESAR HERRAN LICENSE No. 71524 STATE OF FLORIDA PROFESSIONAL ENGINEER

CESAR HERRAN, P.E.
FL. MECHANICAL ENGINEER
REG. No. 71524

WA PROJECT NO.: 21524.00

ISSUE DATE
05/27/2016

NO.	REVISION DATE

DRAWING TITLE
LEGEND AND SCHEDULES

SHEET NUMBER
M1.01

P:\Seminoles Maintenance Building and Restrooms.2015\Drawings\CD\Storage Building\Mechanical\M1.01-SMB.dwg Jun 02, 2016 - 4:29pm JPEDRAZA

To the best of the Architect's or Engineer's knowledge, the plans and specifications comply with the applicable minimum codes and the applicable fire-safety standards as determined by the local authority in accordance with F.B.C. section 110.3.7.4.4 and Chapter 633, Florida Statutes

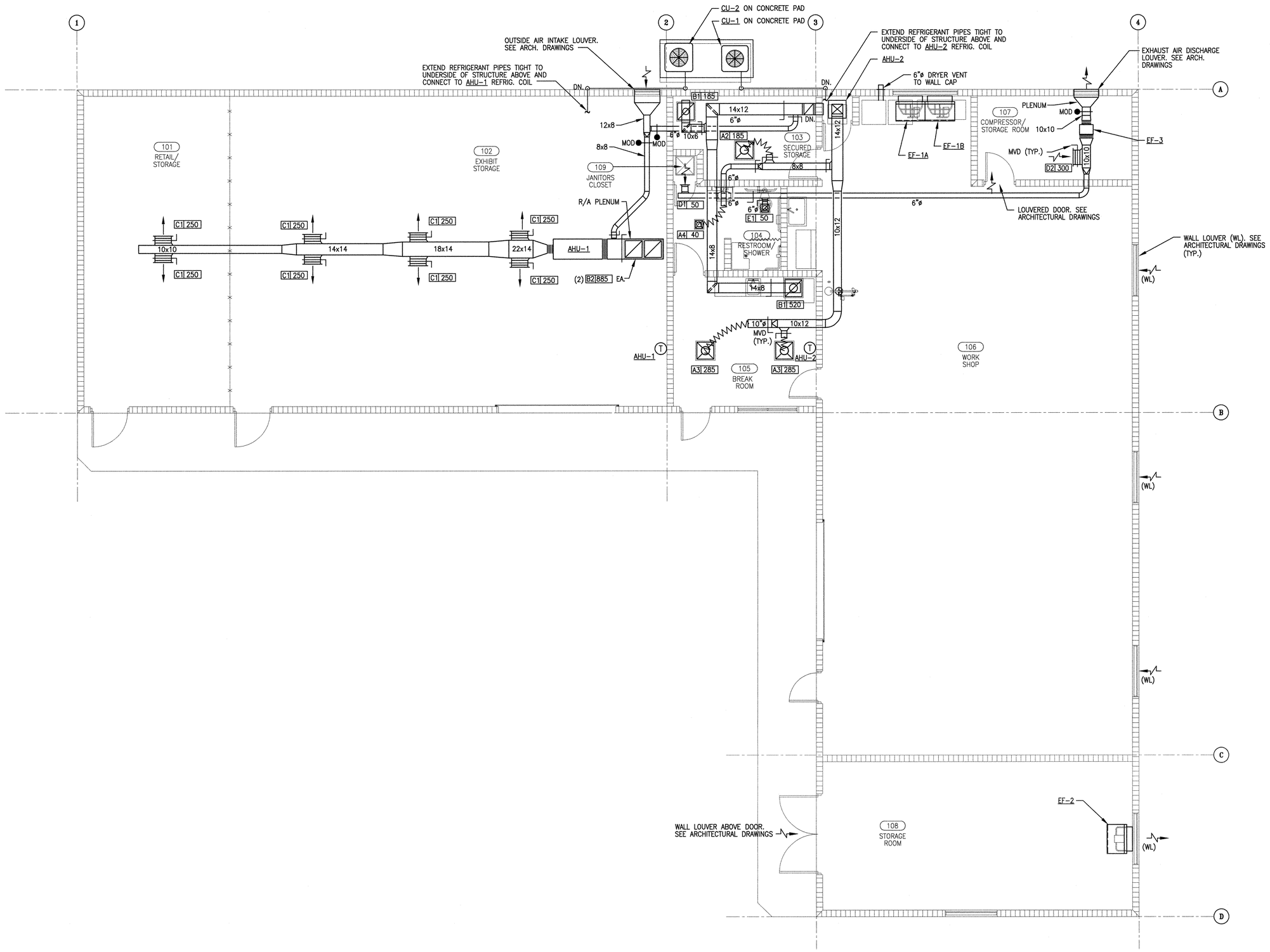

1 M3.01 HVAC STORAGE BUILDING PLAN
SCALE: 1/4"=1'-0"

WOLFBERG ALVAREZ
ARCHITECTURE ENGINEERING
3225 AVIATION AVE., SUITE 400
MIAMI, FLORIDA 33133
V 305.666.5474
F 305.666.4994
WOLFBERGALVAREZ.COM
AA 002416 EB 002354

SEMINOLE AH-TAH-THI-KI STORAGE BUILDING

34450 W BOUNDARY ROAD
CLEWISTON, FL 33440

SEAL

CESAR HERRAN, P.E.
FL. MECHANICAL ENGINEER
REG. No. 71524

WA PROJECT NO.: 21524.00

ISSUE DATE
05/27/2016

NO.	REVISION DATE

DRAWING TITLE
HVAC STORAGE BUILDING PLAN

SHEET NUMBER
M3.01

P:\Seminoles Maintenance Building and Restrooms.2015\Drawings\C01\Storage Building\Mechanical\M3.01-SMB.dwg Jun 02, 2016 - 4:28pm JPEDRAZA

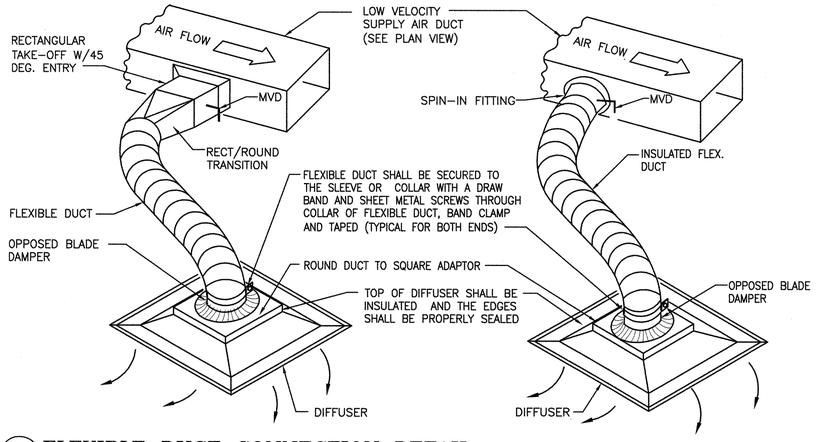

1 M8.01 **FLEXIBLE DUCT CONNECTION DETAIL**
NOT TO SCALE (SIMILAR FOR TRUNK DUCT BOTTOM CONNECTION WHEN CEILING SPACE ALLOWS)

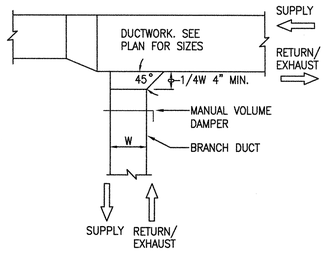

PLAN VIEW

NOTE:
TYPICAL LOCATION OF MANUAL VOLUME DAMPER FOR ALL LOCATION

2 M8.01 **TYPICAL SUPPLY/EXHAUST AND/OR RETURN BRANCH DUCT**
NOT TO SCALE
NOTE: TYPICAL FOR ALL CONSTANT VOLUME SYSTEMS DUCTWORK THROUGHOUT AND FOR DUCTWORK DOWNSTREAM OF VAV BOXES IN VARIABLE VOLUME SYSTEMS

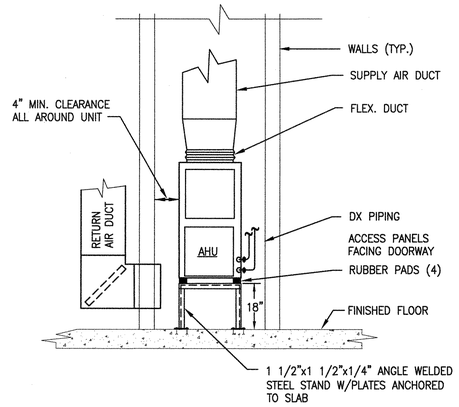

3 M8.01 **TYPICAL AC UNIT MOUNTING DETAIL**
SCALE: N.T.S.
NOTE:
AS PER FBC (MECHANICAL 2014) 307.2.3-4. A WATER LEVEL DETECTION DEVICE CONFORMING TO UL508 SHALL BE PROVIDED THAT WILL SHUT-OFF THE EQUIPMENT SERVED IN THE EVENT THAT THE PRIMARY DRAIN IS BLOCKED. THE DEVICE SHALL BE INSTALLED IN THE EQUIPMENT DRAIN PAN LOCATED AT A POINT HIGHER THAN PRIMARY DRAIN LINE CONNECTION AND BELOW THE OVERFLOW RIM OF SUCH PAN

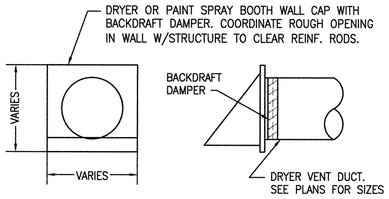

4 M8.01 **DRYER WALL VENT OUTLET**
NOT TO SCALE

MECHANICAL EQUIPMENT EXPOSED TO WIND

AS REQUIRED BY FLORIDA BUILDING CODE MECHANICAL 2014, ARTICLE 301.15 ALL MECHANICAL EQUIPMENT, APPLIANCES AND SUPPORTS THAT ARE EXPOSED TO WIND SHALL BE DESIGNED AND INSTALLED TO RESIST THE WIND PRESSURES ON THE EQUIPMENT AND THE SUPPORTS AS DETERMINED IN ACCORDANCE WITH THE FLORIDA BUILDING CODE, BUILDING. ROOF MOUNTED MECHANICAL UNITS AND SUPPORTS SHALL BE SECURED TO THE STRUCTURE.

FLORIDA BUILDING CODE 2014, ARTICLE 1620.2 REQUIRES THAT WIND VELOCITIES (3-SECOND GUST) USED IN STRUCTURAL CALCULATIONS SHALL BE 186 MILES PER HOUR IN MIAMI-DADE COUNTY.

EQUIPMENT MANUFACTURER OF ALL MECHANICAL EQUIPMENT, APPLIANCES AND SUPPORTS THAT ARE EXPOSED TO WIND SHALL INCLUDE AS PART OF THE SUBMITTAL PACKAGE DOCUMENTATION AND DETAILS INDICATING COMPLIANCE WITH FBC (M) 301.15

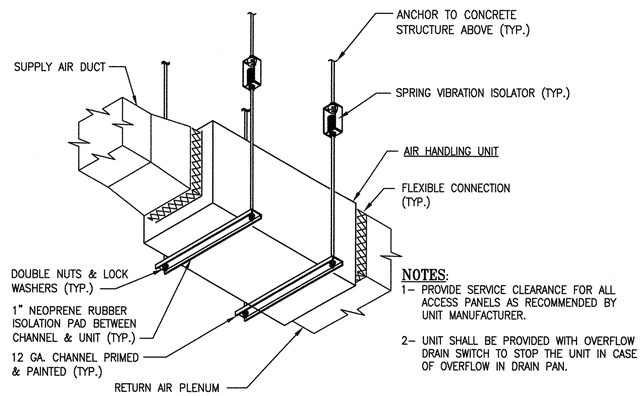

NOTES:
1- PROVIDE SERVICE CLEARANCE FOR ALL ACCESS PANELS AS RECOMMENDED BY UNIT MANUFACTURER.
2- UNIT SHALL BE PROVIDED WITH OVERFLOW DRAIN SWITCH TO STOP THE UNIT IN CASE OF OVERFLOW IN DRAIN PAN.

5 M8.01 **AIR HANDLING UNIT TYPICAL DETAIL**
SCALE: N.T.S.
NOTE:
AT CONTRACTORS OPTION INSTEAD OF AUXILIARY DRAIN PAN A WATER LEVEL DETECTION DEVICE CONFORMING TO UL508 CAN BE PROVIDED THAT WILL SHUT-OFF THE EQUIPMENT SERVED IN THE EVENT THAT THE PRIMARY DRAIN IS BLOCKED. THE DEVICE SHALL BE INSTALLED IN THE EQUIPMENT DRAIN PAN LOCATED AT A POINT HIGHER THAN PRIMARY DRAIN LINE CONNECTION AND BELOW THE OVERFLOW RIM OF SUCH PAN [FBC (MECHANICAL 2014) 307.2.3-4.]

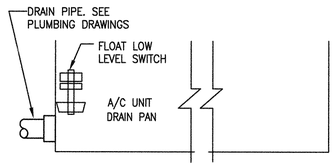

6 M8.01 **AHU DRAIN DETAIL**
NOT TO SCALE

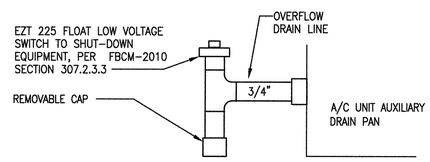

7 M8.01 **A/C AUXILIARY DRAIN PAN**
NOT TO SCALE

NOTE:
SEE WIRE HANGER OPTION

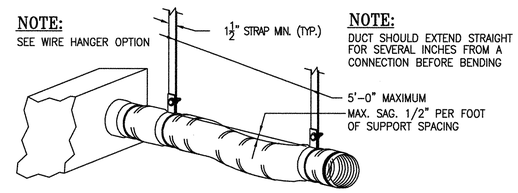

NOTE:
DUCT SHOULD EXTEND STRAIGHT FOR SEVERAL INCHES FROM A CONNECTION BEFORE BENDING

NOTES:
SUPPORT SYSTEM MUST NOT DAMAMAGE DUCT OR CAUSE OUT OF ROUND SHAPE
CLOSER MAXIMUM INTERVALS MAY BE SPECIFIED AS A CONDITION OF U.L. LISTING, PARTICULARLY IN FIRE RATED FLOOR - CEILING ASSEMBLIES.

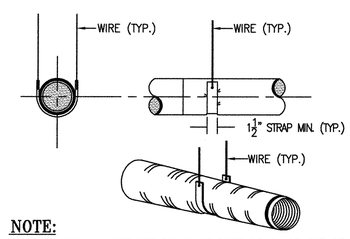

NOTE:
SUPPORT SYSTEM MUST NOT DAMAMAGE DUCT OR CAUSE OUT OF ROUND SHAPE

8 M8.01 **FLEXIBLE DUCT HANGER SUPPORT DETAIL**
NOT TO SCALE SMACNA HVAC DUCT CONSTRUCTION STANDARDS METAL AND FLEXIBLE - SECOND EDITION

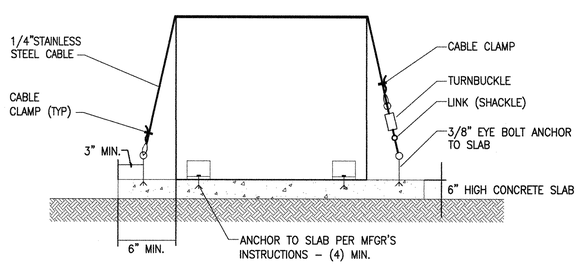

9 M8.01 **CONDENSING UNIT MOUNTING DETAIL**
NOT TO SCALE
NOTE: INSTALL 2 CABLES MINIMUM PER UNIT. ALL HARDWARE & FASTENER SHALL HAVE CORROSION RESISTANT COATING SUITABLE FOR SEA COAST ENVIRONMENT.

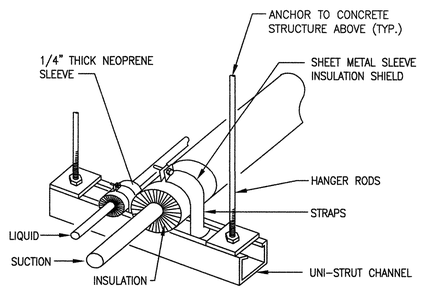

10 M8.01 **REFRIGERANT PIPE HANGER DETAIL**
NOT TO SCALE

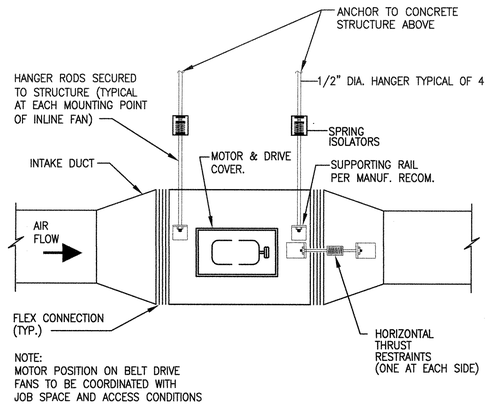

NOTE:
MOTOR POSITION ON BELT DRIVE FANS TO BE COORDINATED WITH JOB SPACE AND ACCESS CONDITIONS

11 M8.01 **TYPICAL INLINE FAN MOUNTING DETAIL**
NOT TO SCALE

WOLFBERG ALVAREZ
ARCHITECTURE · ENGINEERING
3225 AVIATION AVE., SUITE 400
MIAMI, FLORIDA 33133
V 305.666.5474
F 305.666.4994
WOLFBERGALVAREZ.COM
AA 002416 EB 002354

SEMINOLE AH-TAH-THI-KI STORAGE BUILDING
34450 W BOUNDARY ROAD
CLEWISTON, FL 33440

SEAL
CESAR HERRAN, LICENSE, No. 71524, STATE OF FLORIDA, PROFESSIONAL ENGINEER
05/27/2016

CESAR HERRAN, P.E.
FL MECHANICAL ENGINEER
REG. No. 71524

WA PROJECT NO.: 21524.00

ISSUE DATE
05/27/2016

NO.	REVISION DATE

DRAWING TITLE
DETAILS

SHEET NUMBER
M8.01

P:\Seminoles Maintenance Building and Restrooms.2015\Drawings\CD\Storage Building\Mechanical\M8.01-SMB.dwg Jun 02, 2016 - 4:29pm JFCDRAZA

To the best of the Architect's or Engineer's knowledge, the plans and specifications comply with the applicable minimum codes and the applicable fire-safety standards as determined by the local authority in accordance with F.B.C. section 110.3.3.1.1 and Chapter 633, Florida Statutes

ELECTRICAL GENERAL NOTES

1- ALL CONDUCTORS SHALL BE COPPER RATED 75C WET/DRY EXCEPT WHERE OTHERWISE REQUIRED BY U.L. OR CODES, U.O.N. MINIMUM WIRE SIZE SHALL BE #12 AWG. EXCLUDING CONTROL WIRING.

2- ALL CONDUIT RISERS SHALL BE RIGID GALVANIZED STEEL (RGS) WHERE CONDUIT BENDS UPWARD FROM UNDERGROUND TO ABOVE GROUND, USE AN APPROVED PVC TO RGS COUPLER, AS REQUIRED. RGS CONDUITS SHALL EXTEND A MINIMUM OF 18" BELOW GRADE.

3- UNLESS NOTED AS EXISTING, ALL EQUIPMENT, WIRING DEVICES, ETC. SHALL BE NEW.

4- ENTIRE INSTALLATION SHALL BE IN ACCORDANCE WITH THE NATIONAL ELECTRICAL CODE, 2011 EDITION (NEC) AND THE LATEST APPLICABLE EDITIONS OF ALL LOCAL CODES, RULES AND ORDINANCES HAVING JURISDICTION.

5- ALL CONDUITS RUNS ARE SHOWN DIAGRAMMATICALLY, EXACT ROUTING SHALL BE DETERMINED IN THE FIELD, UNLESS OTHERWISE NOTED.

6- ALL DISCONNECT SWITCHES SHALL BE SIZED BY NEC TO ACCOMMODATE EQUIPMENT SERVED INCLUDING REQUIRED FUSES, UON. SWITCHES SHALL BE HORSE POWER RATED AND SIZED AS PER MOTOR NAMEPLATE CURRENT. HEAVY DUTY TYPE.

7- ALL ELECTRICAL EQUIPMENTS SHALL BE RAINTIGHT (NEMA 3R) WHERE EXPOSED TO THE WEATHER. ALL FLEX CONDUITS CONNECTED TO ELECTRICAL EQUIPMENT SHALL BE LIQUID TIGHT.

8- WIRE WAYS SHALL BE SIZED AS REQUIRED, PER NEC. UNLESS OTHERWISE NOTED (UON)

9- COORDINATE ALL ELECTRICAL SITE WORK WITH GENERAL CONTRACTOR.

10- FOR UNDERGROUND ELECTRICAL CONDUITS, PROVIDE PULL BOXES SUCH THAT NO SINGLE CONDUIT RUN HAS BEND IN EXCESS OF THREE 90 BENDS. PULL BOXES SHALL BE SUITABLE AND APPROVED FOR THE INTENDED USE. WARNING TAPE WHICH SAYS "WARNING BURIED ELECTRIC" SHALL BE PLACED IN TRENCHES ABOVE ALL UNDERGROUND ELECTRIC CONDUITS.

11- ALL CIRCUIT BREAKERS SHALL BE INVERSE TIME TYPE (THERMAL MAGNETIC). TWO AND THREE POLE CIRCUIT BREAKERS SHALL BE COMMON TRIP. NO TIE HANDLES PERMITTED.

12- ALL ELECTRICAL EQUIPMENT, DEVICES WIRE, ETC., SHALL BE LISTED FOR THE INTENDED USE, WITH (UNDERWRITER'S LABORATORIES, INC. (UL) WHERE STANDARDS HAVE BEEN ESTABLISHED BY UL.

13- ALL CONDUCTORS SHALL BE IN CONDUITS, ALL CONDUITS SHALL BE INTERMEDIATED (IMC) OR RIGID GALVANIZED STEEL (RGS) EXCEPT THAT: (A) POLY VINYL CHLORIDE (PVC) CONDUITS MAY BE USED IN CONCRETE SLABS AND UNDERGROUND PROVIDED ELBOWS AND RISERS ARE RGS; (B) LIQUID TIGHT FLEXIBLE CONDUIT WHERE REQUIRED; ALL CONDUITS SHALL MEET THE REQUIREMENT OF NEC.

14- COORDINATE ELECTRIC SERVICE WITH POWER COMPANY (GLADES ELECTRIC).

15- ELECTRICAL CONTRACTOR SHALL NOT SCALE DRAWINGS. CONTRACTOR SHALL REFER TO ARCHITECTURAL OR SURVEY PLANS AND ELEVATIONS FOR EXACT LOCATIONS OF ALL EQUIPMENT UNLESS NOTED OTHERWISE.

16- ELECTRICAL CONTRACTOR SHALL VISIT THE JOB SITE AND VERIFY ALL CONDITIONS, LOCATIONS, DIMENSIONS AND COUNTS AS SHOWN AND/OR NOTED ON THE DRAWINGS. THIS SHALL INCLUDE ANY AND ALL FABRICATIONS PRIOR TO INSTALLATION.

17- IT SHALL BE THE RESPONSIBILITY OF THE ELECTRICAL CONTRACTOR FOR THE ADVANCED ORDERING OF LONG LEAD ITEMS, AS NOT TO INTERFERE WITH THE PRODUCTION OF OTHER TRADES RESULTING IN ANY DOWN OR LAG TIME.

18- IT SHALL BE THE RESPONSIBILITY OF THE ELECTRICAL CONTRACTOR TO PROVIDE ALL LABOR, MATERIALS AND SUPERVISION NECESSARY TO ACCOMPLISH THE WORK AS SHOWN AND/OR NOTED ON THE DRAWINGS.

19- IT SHALL BE UNDERSTOOD THAT ALL WORK PERFORMED SHALL BE DONE BY A LICENSED ELECTRICAL CONTRACTOR AND IN A FIRST-CLASS WORKMANLIKE MANNER, SAID CONTRACTOR SHALL MEET ALL REQUIREMENTS SET FORTH BY ANY LOCAL ORDINANCE AND GOVERNING AUTHORITIES.

20- THE ELECTRICAL CONTRACTOR SHALL BE RESPONSIBLE TO REPAIR TO ORIGINAL CONDITIONS ANY AND ALL DAMAGED TO BUILDING SURFACES, EQUIPMENT AND FURNISHING CAUSED DURING PERFORMANCE OF WORK.

21- THE ELECTRICAL CONTRACTOR SHALL KEEP ALL AREAS IN WHICH WORK IS BEING PERFORMED, FREE FROM DEBRIS AT ALL TIMES.

22- IT SHALL NOT BE THE INTENT OF THESE PLANS AND/OR SPECIFICATION TO SHOW EVERY MINOR DETAIL OF CONSTRUCTION THE ELECTRICAL CONTRACTOR SHALL BE EXPECTED TO FURNISH AND INSTALL ALL ITEMS FOR A COMPLETE ELECTRICAL AND PROVIDE ALL REQUIREMENTS NECESSARY FOR EQUIPMENT TO BE PLACED IN PROPER WORKING ORDER.

23- WHERE CORE DRILLING OF FLOOR/WALLS IS REQUIRED, CONTRACTOR SHALL SEAL OPENING WATERTIGHT AFTER UTILITIES HAVE BEEN INSTALLED. LOCATION OF CORED HOLES SHALL COORDINATE WITH LOCATION OF EQUIPMENT IN A MANNER TO BE CLEAN AND FUNCTIONAL. THE CONTRACTOR SHALL INSTALL ONLY ONE CONDUIT PER HOLE AND SEAL THE OPENING AROUND THE CONDUIT AS SPECIFIED.

24- ELECTRICAL CONTRACTOR SHALL VERIFY CIRCUIT PROTECTIVE DEVICE RATING FOR EQUIPMENT PRIOR TO CONSTRUCTION.

25- ALL FUSES SHALL BE CURRENT LIMITING, PER U.L. RATED 600V. UON.

A- NONTIME DELAY FUSES IN MAIN SWITCHES AND SWITCHES FEEDING PANELS.

26- OUTLET BOXES SHALL BE PRESSED STEEL IN DRY LOCATIONS, CAST ALLOY WITH THREADED HUBS IN WET OR DAMP LOCATIONS AND SPECIAL ENCLOSURE FOR OTHER CLASSIFIED AREAS, AS REQUIRED BY NEC.

27- AS A MINIMUM, ALL EQUIPMENT SHALL MEET APPLICABLE STANDARDS, FOR THE TYPE OF EQUIPMENT AND INTENDED USE, OF THE FOLLOWING:
A. AMERICAN NATIONAL STANDARDS INSTITUTE (ANSI)
B. ILLUMINATING ENGINEERS SOCIETY (IES)
C. AMERICAN SOCIETY FOR TESTING AND MATERIALS (ASTM)
D. NATIONAL ELECTRICAL MANUFACTURER'S ASSOCIATES. (NEMA) NOTE: THESE STANDARDS ARE SUBORDINATE TO CODES AND STANDARDS SET BY U.L.

28- ELECTRICAL CONTRACTOR SHALL SUBMIT (6 COPIES) OF EQUIPMENT LAYOUT FOR ALL ELECTRICAL SPACES, ROOMS, ETC. LAYOUT SHALL CONSIST OF PLAN VIEWS (SCALED AT 1/2"=1'-0") AND ELEVATIONS (DIMENSIONED) FOR EACH SUCH SPACE, ROOM, ETC.

29- ALL CONNECTIONS TO GROUND RODS SHALL BE MADE WITH UL APPROVED WELDED CONNECTIONS, UNLESS NOTED OTHERWISE.

30- PROVIDE FIRE RETARDANT U.L. APPROVED SEALANT ON ALL PENETRATIONS OF FIRE RATED PARTITIONS, WALL AND STRUCTURAL SLABS. IT SHALL BE THE RESPONSIBILITY OF THE ELECTRICAL CONTRACTOR TO VERIFY, PRIOR TO SUBMITTING BID, LOCATION OF ALL SUCH FIRE RATED PARTITIONS, WALL AND STRUCTURAL SLABS.

31- CONTRACTOR TO VERIFY AVAILABLE SERVICE VOLTAGE AND PHASES WITH GLADES ELECTRIC PRIOR TO BID. AND PROVIDE BID ALLOWANCE FOR ALTERNATES.

32- METER CANS, HUBS, & LUGS FOR SAME ARE TO BE FURNISHED AND INSTALLED BY ELECTRICAL CONTRACTOR. ELECTRICAL CONTRACTOR TO VERIFY SPECIFIC TYPE OF METER CAN TO BE USED WITH GLADES ELECTRIC PRIOR TO BID.

33- CONTRACTOR SHALL PROVIDE A TYPE WRITTEN DIRECTORY OF EACH PANEL SCHEDULE, INSIDE EACH PANEL BOARD HAND WRITTEN DIRECTORY IS NOT ACCEPTABLE.

34- EMT, ENT, IMC OR PVC IS PERMITTED AS APPROVED BY LOCAL CODES UTILITY COMPANIES AND VENDOR SPECIFICATION.

35- ALL DISCONNECT SWITCHES INDICATED AS W.P. ARE NEMA 3R TYPE. ALL THE OTHER DISCONNECT SWITCHES LOCATED INSIDE THE BUILDING ARE NEMA 1 TYPE (TYP.)

CODING: 120/208V.

PHASE
- A —— BLACK
- B —— RED
- C —— BLUE
- N —— WHITE
- G —— GREEN

36- ALL CABLES IN OR BELOW GRADE SHALL BE SUITABLE FOR WET LOCATIONS AS PER NEC 310.8 (C).

37- PROVIDE PERMANENT SIGNAGE ON ALL EMERGENCY MAINS AND WHERE REQUIRED AS PER NEC. 700.8

38- EXISTING UTILITIES AND SYSTEMS PRIOR TO COMMENCING ANY EXCAVATION, CORE DRILLING, ETC... EMPLOY AN UNDERGROUND SERVICE LOCATOR FIRM TO ENSURE THAT EXISTING UTILITIES ARE ACCURATELY LOCATED AND THAT THEY WILL NOT BE DISTURBED. AT NO ADDITIONAL COST TO OWNER, CONTRACTOR SHALL REPAIR ANY DAMAGE TO EXISTING UTILITIES AND SYSTEMS WHICH OCCURS AS A RESULT OF OPERATIONS PERFORMED UNDER THIS CONTRACT. REPAIRS TO EXISTING SHALL BE MADE USING MATERIALS AND METHODS TO MATCH EXISTING CONSTRUCTION AND SHALL BE APPROVED BY THE ENGINEER PRIOR TO RE-COVERING.

39- THE CONTRACTOR SHALL SUPPLY AND INSTALL ALL THE REQUIRED GROUNDING CONDUCTORS, CONNECTORS AND RODS TO COMPLETE THE GROUNDING ELECTRODE SYSTEM AND GROUND RING AS PER NEC 250.50 THROUGH NEC 250.64 INCLUSIVE.

40- ALL ELECTRICAL WORK SHALL BE INSTALLED ABOVE BASE FLOOD ELEVATION.

LIGHTING FIXTURE SCHEDULE

TYPE	DESCRIPTION	MANUFACTURER	CATALOG NUMBER	WATTS	SOURCE	COLOR	VOLTS	MOUNTING	REMARKS
A	8' LED VAPORTITE	ILP	WT8 80WLED UNIV 40 SS/SS	80	LED	840	120	PENDANT	WET LOCATION LISTED
A1	8' LED VAPORTITE	ILP	WT8 80WLED UNIV 40 SS	80	LED	840	120	PENDANT	WET LOCATION LISTED
B	LED 2X4	PHILIPS	2EV G 54L 840 4 D DIM F1	55	LED	840	120	RECESSED	
B1	LED 2X4	PHILIPS	2EV G 54L 840 4 D DIM F2 EMLED	55	LED	840	120	RECESSED	BATTERY PACK
C	LED 1X4	PHILIPS	1EV G 38L 840 D DIM F1	39	LED	840	120	RECESSED	
C1	LED 1X4	PHILIPS	1EV G 38L 840 D DIM F1 EMLED	39	LED	840	120	RECESSED	BATTERY PACK
D	EXTERIOR WALLPACK	HE WILLIAMS	VWPV LED32 740 T3	45	LED	740	120	WALL	WET LOCATION LISTED
G	LED VAPORTITE	BEGHELLI	BS100 4HT 50WLED				120	PENDANT	
G1	LED VAPORTITE	BEGHELLI	BS100 4SA 50WLED				120	PENDANT	BATTERY PACK
X1	EXIT SIGN	BEGHELLI	FME SA LR U M	3	LED		120	UNIVERSAL	
X2	EMERGENCY UNIT	BEGHELLI	PEH-1	3	LED		120	SURFACE	

MANUFACTURER AND CATALOG NUMBER LISTED ESTABLISHES THE MINIMUM LEVEL OF QUALITY ACCEPTABLE. PROJECT MUST BE BID AS SPECIFIED. ANY ALTERNATE TO THE BASE BID MUST BE ACCOMPANIED BY
A CREDIT TO THE OWNER WHICH WILL BE EVALUATED BY THE A/E.
1. IN THE EVENT OF ANY DISCREPANCY BETWEEN FIXTURE DESCRIPTION AND THE CATLALOG NUMBER LISTED THE DESCRIPTION WILL TAKE PRECEDENCE AND THE DISCREPANCY SHALL BE BROUGHT TO THE A/E'S
ATTENTION PRIOR TO BIDDING.
2. ALL FIXTURES SHALL BE U.L. LISTED FROM A NATIONALLY RECOGNIZED TESTING LABORATORY

SYMBOL LEGEND ELECTRICAL

LIGHTING FIXTURES

- 1'x4' FLUORESCENT LUMINAIRE, CEILING/WALL
- 1'x4' FLUORESCENT LUMINAIRE, BATTERY/EMERGENCY, CEILING/WALL
- 2'x4' FLUORESCENT LUMINAIRE,
- 2'x4' FLUORESCENT LUMINAIRE, BATTERY/EMERGENCY
- 1'x8' FLUORESCENT LUMINAIRE, CEILING/WALL
- BOLLARD LIGHT FIXTURE (LANDSCAPE)
- POLE MOUNTED FIXTURE (LANDSCAPE)
- LANDSCAPE LIGHT FIXTURE
- WALL MOUNTED LUMINAIRE
- EMERGENCY LIGHT W/BATTERY PACK
- SINGLE FACE EXIT LIGHT ARROW INDICATES DIRECTION OF EGRESS
- (A) LIGHT FIXTURE TYPE, SEE LIGHTING FIXTURE SCHEDULE.

SWITCHES

- S — SINGLE POLE LIGHT SWITCH 120/277V MTD. @ 48" A.F.F.
- S_3 — SWITCH, 3-WAY
- S_{OS} — SWITCH, OCCUPANCY SENSOR
- $S_a S_b$ — SWITCH LEG a/b FOR CONTROL OF THE INBOARD/OUTBOARD LAMP IN NORMAL AND EMERGENCY POWERED LUMINAIRE.

LIGHTING CONTROL DEVICES

- (P) PHOTOCELL
- (OS) WATTSTOPPER DT-355 OCCUPANCY SENSOR DUAL TECHNOLOGY (PASSIVE INFRARED MICROPHONIC) CEILING MOUNTED. SET TIME 30 MIN.

POWER DISTRIBUTION

- DUPLEX WALL RECEPTACLE, SURFACE MOUNTED @ 18" A.F.F. U.O.N.
- F — NEMA 3R GFI FLOOR OUTLET RECEPTACLE (LANDSCAPE)
- DUPLEX WALL RECEPTACLE SURFACE MOUNTED HORIZONTALLY 6" ABOVE COUNTER TOP, IN BATHROOM 48" A.F.F. U.O.N.
- GFI — DUPLEX RECEPTACLE WITH GROUND FAULT INTERRUPTER 48" A.F.F. U.O.N. SURFACE MOUNTED.
- GFI — DUPLEX RECEPTACLE SURFACE MOUNTED WITH GROUND FAULT CIRCUIT INTERRUPTER
- WP/GFI — DUPLEX RECEPTACLE, GROUND FAULT & WEATHER-RESISTANT WITH CAST ALUMINUM WEATHERPROOF "IN USE" COVER SURFACE MOUNTED.
- C — DUPLEX RECEPTACLE CEILING MOUNTED
- DISCONNECT SWITCH, NUMBER OF POLES AND RATING AS INDICATED ON PLANS
- STARTER/DISCONNECT SWITCH W/ PHASE MONITORING, NUMBER OF POLES AND RATING AS INDICATED ON PLANS
- (J) JUNCTION BOX
- [J] JUNCTION BOX
- HD — JUNCTION BOX
- PB — PULL BOX
- MH — MANHOLE
- FLEXIBLE CONDUIT
- 5/8"ø X 30'L GROUND ROD WITH TEST INSPECTION WELL
- METERS
- 120/208V PANELBOARD
- UNDERGROUND CONDUIT
- CONDUIT AND WIRE RUN EXPOSED ON CEILING WALL.
- BRACH CIRCUIT HOMERUN: LONG HASHMARK WITH FLAG DENOTES GROUND WIRE. LONG HASHMARK WITHOUT FLAG DENOTES NEUTRAL WIRE. SHORT HASHMARK DENOTES PHASE WIRE.

FIRE ALARM DETECTION SYSTEM

- FACP — FIRE ALARM CONTROL PANEL
- P — MANUAL FIRE ALARM PULL STATION
- F — FIRE ALARM COMBINATION HORN/STROBE DEVICE
- FIRE ALARM STROBE-ONLY
- SMOKE DETECTOR
- E — FIRE ALARM DEVICE "E" DENOTES (EXISTING)

PREMISE DISTRIBUTION SYSTEMS

- WALL MOUNTED TELEPHONE OUTLET (3/4" E.C. TO NEAREST T.T.B. U.O.N.)

MISCELLANEOUS SYMBOL LEGEND

XX / XX.XX — TITLE — SCALE: — XX.XX
- DETAIL NUMBER
- DETAIL TITLE REFERENCE
- SHEET NUMBER WHERE DETAIL IS REFERENCED
- ADDITIONAL SHEET REFERENCES

XX / XX.XX
- DETAIL NUMBER
- SHEET NUMBER WHERE DETAIL IS REFERENCED

ABBREVIATIONS

A, AMP	AMPERES
A.F.F.	ABOVE FINISHED FLOOR
A.F.G.	ABOVE FINISHED GRADE
COND.	CONDUIT
CKT	CIRCUIT
CLG	CEILING
DISC	DISCONNECT(ING)
DWG	DRAWING(S)
EXIST	EXISTING
GND	GROUND
HGT	HEIGHT
JB	JUNCTION BOX
KVA	KILO-VOLTS-AMPERES
MAX	MAXIMUM
MCB	MAIN CIRCUIT BREAKER
MIN	MINIMUM
MISC	MISCELLANEOUS
MTD	MOUNTED
MTG	MOUNTING
NEC	NATIONAL ELECTRICAL CODE
O.C.	ON CENTER
PNL	PANEL
PVC	POLYVINYL CHLORIDE
RGS	RIGID GALVANIZED STEEL
TYP	TYPICAL
UON	UNLESS OTHERWISE NOTED
V	VOLTS
W	WATTS
WP	WEATHER PROOF

WOLFBERG ALVAREZ
ARCHITECTURE · ENGINEERING
3225 AVIATION AVE., SUITE 400
MIAMI, FLORIDA 33133
V 305.666.5474
F 305.666.4994
WOLFBERGALVAREZ.COM
AA 002416 EB 002354

SEMINOLE AH-TAH-THI-KI STORAGE BUILDING
34450 W BOUNDARY ROAD
CLEWISTON, FL 33440

SEAL
JULIO E. ALVAREZ LICENSE No. 14595 STATE OF FLORIDA PROFESSIONAL ENGINEER

JULIO E. ALVAREZ, P.E.
ELECTRICAL ENGINEER
FLA. REG. NO. 14595

WA PROJECT NO.: 21524.00
ISSUE DATE 05/27/2016

NO.	REVISION DATE

DRAWING TITLE
LEGEND GENERAL NOTES

SHEET NUMBER
E1.01

P:\Seminoles Maintenance Building and Restrooms.2015\Drawings\CD\Storage Building\Electrical\E1.01-SMB.dwg Jun 02, 2016 - 6:02pm MTOLEDO

To the best of the Architect's or Engineer's knowledge, the plans and specifications comply with the applicable minimum codes and the applicable fire-safety standards as determined by the local authority in accordance with F.B.C. section 110.3.7.4.4 and Chapter 633, Florida Statutes.

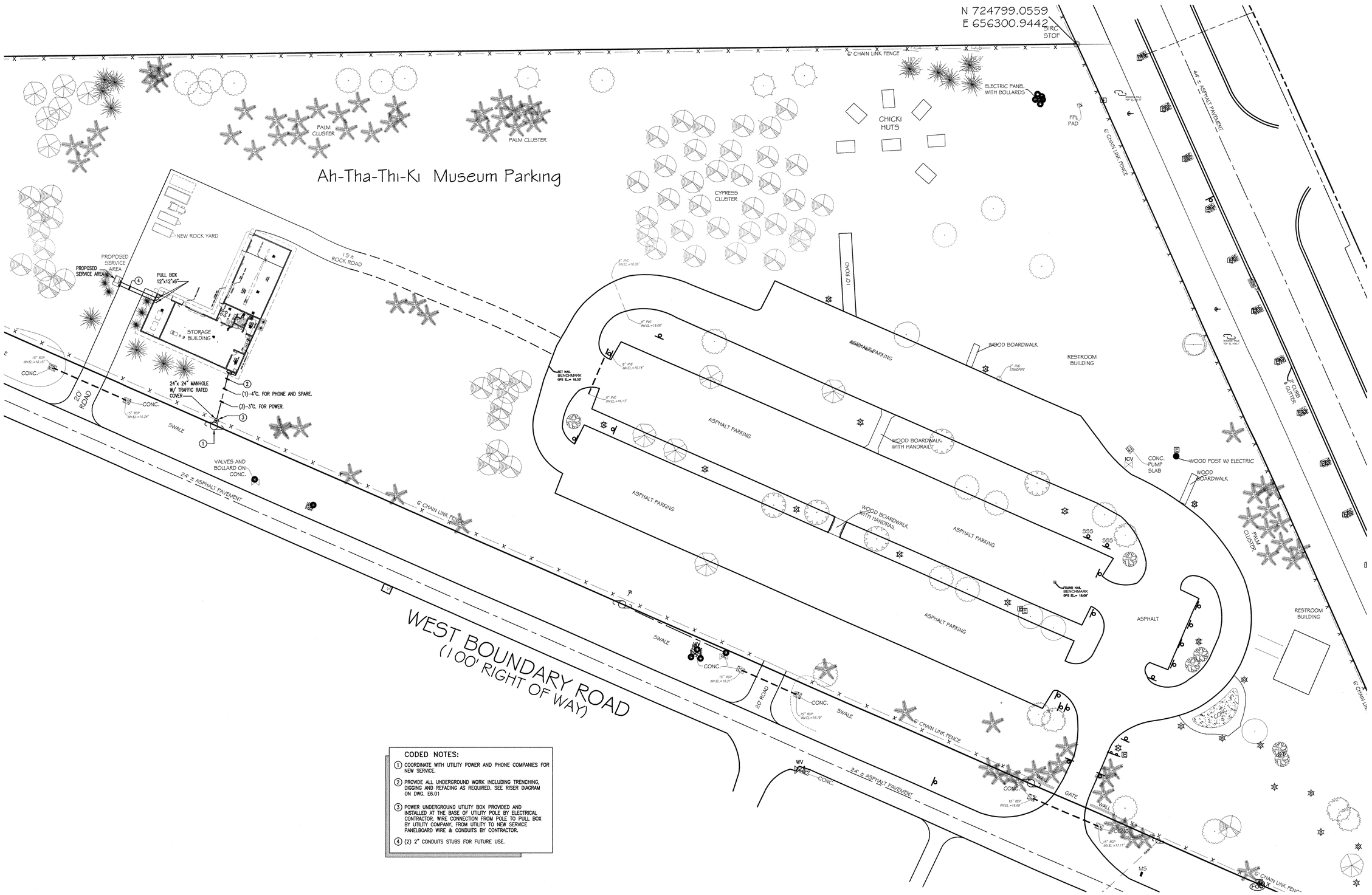

CODED NOTES:

1. COORDINATE WITH UTILITY POWER AND PHONE COMPANIES FOR NEW SERVICE.
2. PROVIDE ALL UNDERGROUND WORK INCLUDING TRENCHING, DIGGING AND REFACING AS REQUIRED. SEE RISER DIAGRAM ON DWG. E6.01
3. POWER UNDERGROUND UTILITY BOX PROVIDED AND INSTALLED AT THE BASE OF UTILITY POLE BY ELECTRICAL CONTRACTOR. WIRE CONNECTION FROM POLE TO PULL BOX BY UTILITY COMPANY, FROM UTILITY TO NEW SERVICE PANELBOARD WIRE & CONDUITS BY CONTRACTOR.
4. (2) 2" CONDUITS STUBS FOR FUTURE USE.

1 / E1.02 OVERALL ELECTRICAL SITE PLAN
SCALE: 1"= 30'-0"

To the best of the Architect's or Engineer's knowledge, the plans and specifications comply with the applicable minimum codes and the applicable fire-safety standards as determined by the local authority in accordance with F.B.C. section 110.3.7.4.4 and Chapter 633, Florida Statutes.

WOLFBERG ALVAREZ
ARCHITECTURE · ENGINEERING
3225 AVIATION AVE., SUITE 400
MIAMI, FLORIDA 33133
V 305.666.5474
F 305.666.4994
WOLFBERGALVAREZ.COM
AA 002416 EB 002354

SEMINOLE AH-TAH-THI-KI STORAGE BUILDING

34450 W BOUNDARY ROAD
CLEWISTON, FL 33440

SEAL

JULIO E. ALVAREZ, P.E.
ELECTRICAL ENGINEER
FLA. REG. NO. 14595

WA PROJECT NO.: 21524.00

ISSUE DATE
05/27/2016

NO.	REVISION DATE

DRAWING TITLE
OVERALL ELECT. SITE PLAN

SHEET NUMBER
E1.02

P:\Seminoles Maintenance Building and Restrooms 2015\Drawings\CD\Storage Building\Electrical\E1.02-SMB.dwg Jun 03, 2016 - 9:54am MITOLEDO

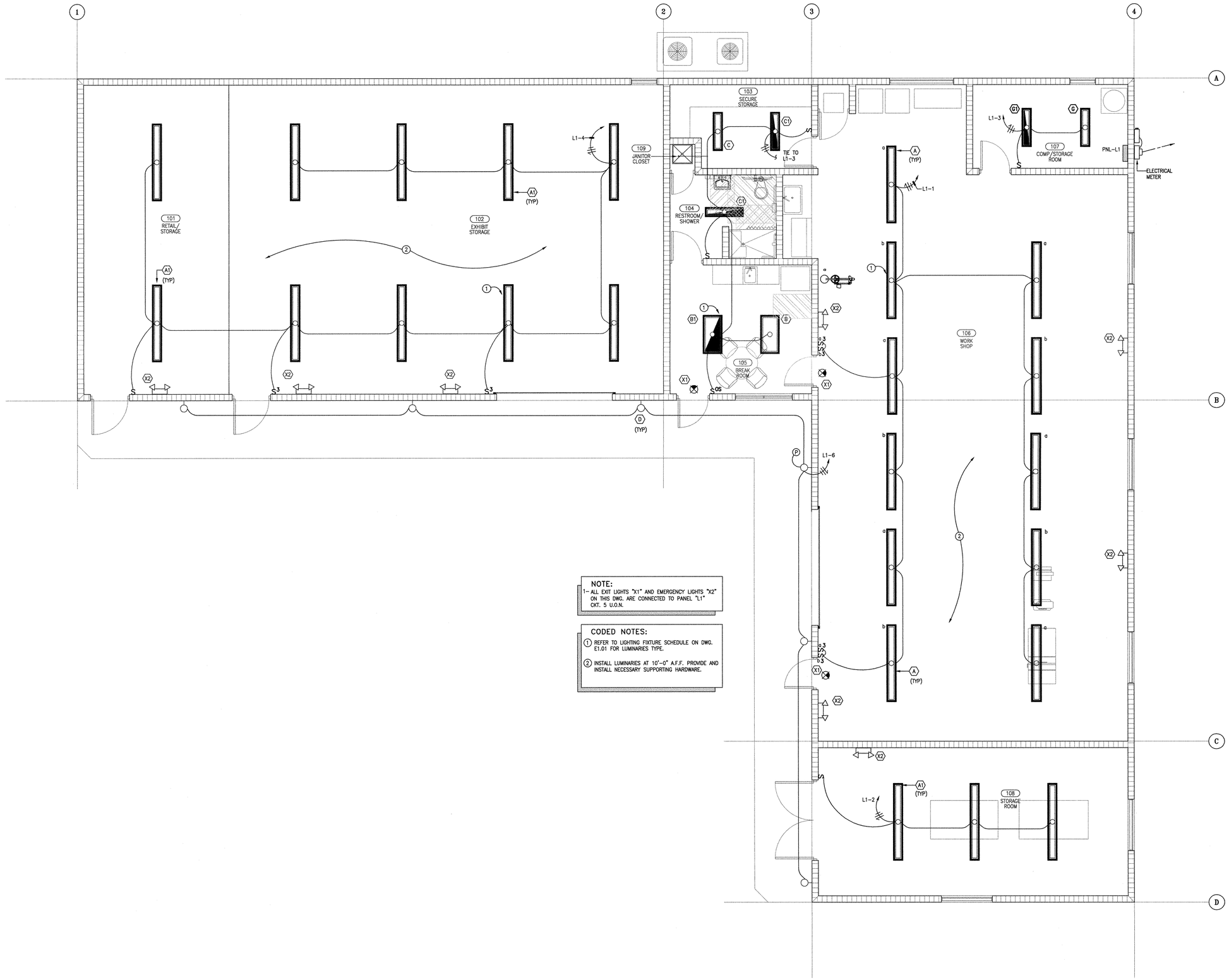

NOTE:

1- ALL EXIT LIGHTS "X1" AND EMERGENCY LIGHTS "X2" ON THIS DWG. ARE CONNECTED TO PANEL "L1" CKT. 5 U.O.N.

CODED NOTES:

1. REFER TO LIGHTING FIXTURE SCHEDULE ON DWG. E1.01 FOR LUMINARIES TYPE.
2. INSTALL LUMINARIES AT 10'-0" A.F.F. PROVIDE AND INSTALL NECESSARY SUPPORTING HARDWARE.

1 / E3.01 STORAGE BUILDING PLAN-LIGHTING
SCALE: 1/4"=1'-0"

WOLFBERG ALVAREZ
ARCHITECTURE · ENGINEERING
3225 AVIATION AVE., SUITE 400
MIAMI, FLORIDA 33133
V 305.666.5474
F 305.666.4994
WOLFBERGALVAREZ.COM
AA 002416 EB 002354

SEMINOLE AH-TAH-THI-KI STORAGE BUILDING

34450 W BOUNDARY ROAD
CLEWISTON, FL 33440

SEAL

JULIO E. ALVAREZ, P.E.
ELECTRICAL ENGINEER
FLA. REG. NO. 14595

WA PROJECT NO.: 21524.00

ISSUE DATE
05/27/2016

NO.	REVISION DATE

DRAWING TITLE
STORAGE BLDG. LIGHTING

SHEET NUMBER
E3.01

P:\Seminoles Maintenance Building and Restrooms 2015\Drawings\CD\Storage Building\Electrical\E3.01-SMB.dwg Jun 03, 2016 - 8:39am MTOLEDO

To the best of the Architect's or Engineer's knowledge, the plans and specifications comply with the applicable minimum codes and the applicable fire-safety standards as determined by the local authority in accordance with F.B.C. section 110.3.7.4.4 and Chapter 633, Florida Statutes.

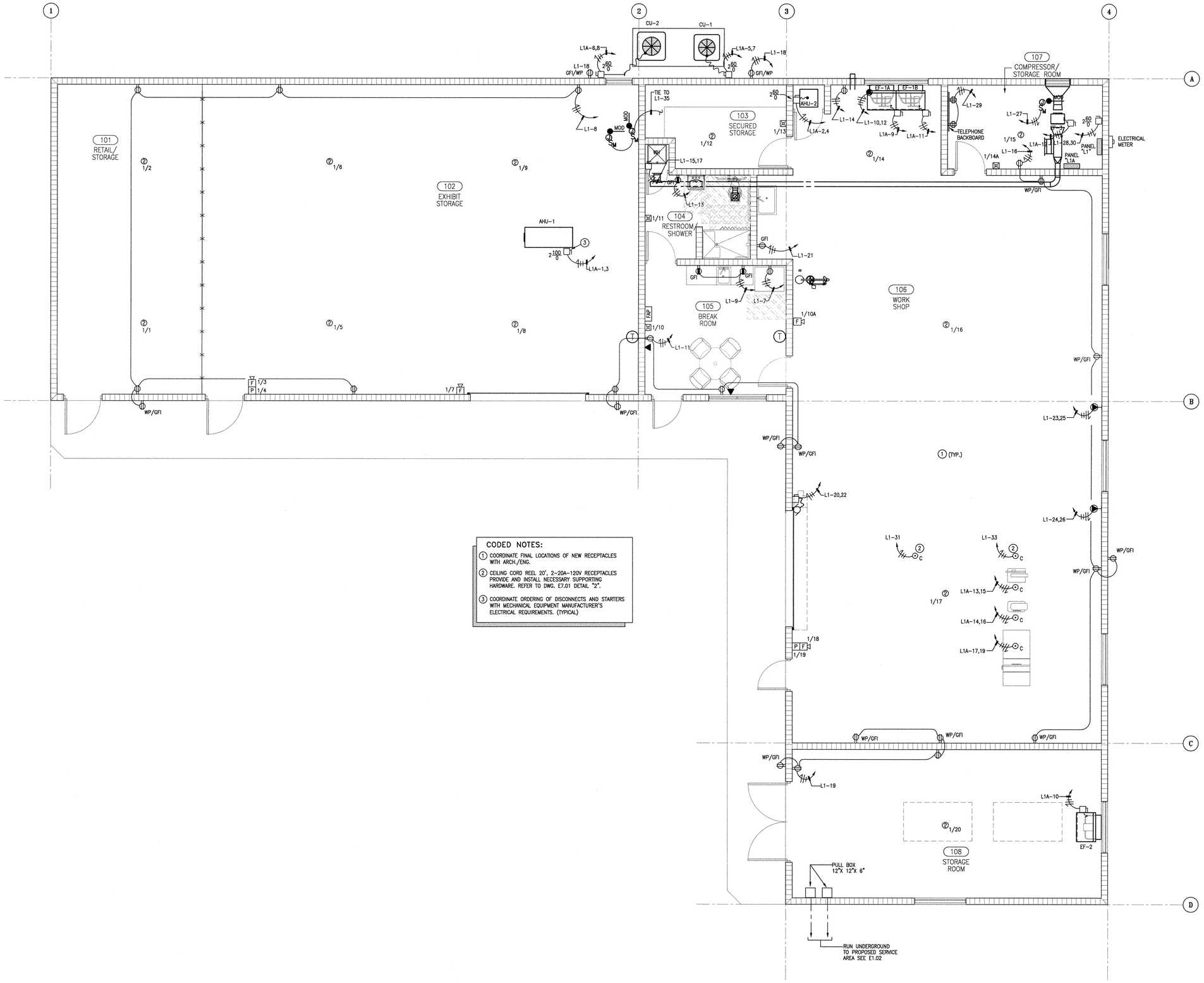

CODED NOTES:

1. COORDINATE FINAL LOCATIONS OF NEW RECEPTACLES WITH ARCH./ENG.
2. CEILING CORD REEL 20', 2-20A-120V RECEPTACLES PROVIDE AND INSTALL NECESSARY SUPPORTING HARDWARE. REFER TO DWG. E7.01 DETAIL "2".
3. COORDINATE ORDERING OF DISCONNECTS AND STARTERS WITH MECHANICAL EQUIPMENT MANUFACTURER'S ELECTRICAL REQUIREMENTS. (TYPICAL)

1 / E4.01 STORAGE BUILDING PLAN-POWER & SYSTEMS
SCALE: 1/4"=1'-0"

To the best of the Architect's or Engineer's knowledge, the plans and specifications comply with the applicable minimum codes and the applicable fire-safety standards as determined by the local authority in accordance with F.B.C. section 110.3.7.4.4 and Chapter 633, Florida Statutes.

WOLFBERG ALVAREZ
ARCHITECTURE · ENGINEERING
3225 AVIATION AVE., SUITE 400
MIAMI, FLORIDA 33133
V 305.666.5474
F 305.666.4994
WOLFBERGALVAREZ.COM
AA 002416 EB 002354

SEMINOLE AH-TAH-THI-KI STORAGE BUILDING

34450 W BOUNDARY ROAD
CLEWISTON, FL 33440

SEAL

JULIO E. ALVAREZ, P.E.
ELECTRICAL ENGINEER
FLA. REG. NO. 14595

WA PROJECT NO.: 21524.00

ISSUE DATE
05/27/2016

NO.	REVISION DATE

DRAWING TITLE
STO. & REST. POWER PLAN

SHEET NUMBER
E4.01

P:\Seminoles Maintenance Building and Restrooms 2015\Drawings\CD\Storage Building\Electrical\E4.01-SMB.dwg Jun 03, 2016 - 8:19am MTOLEDO

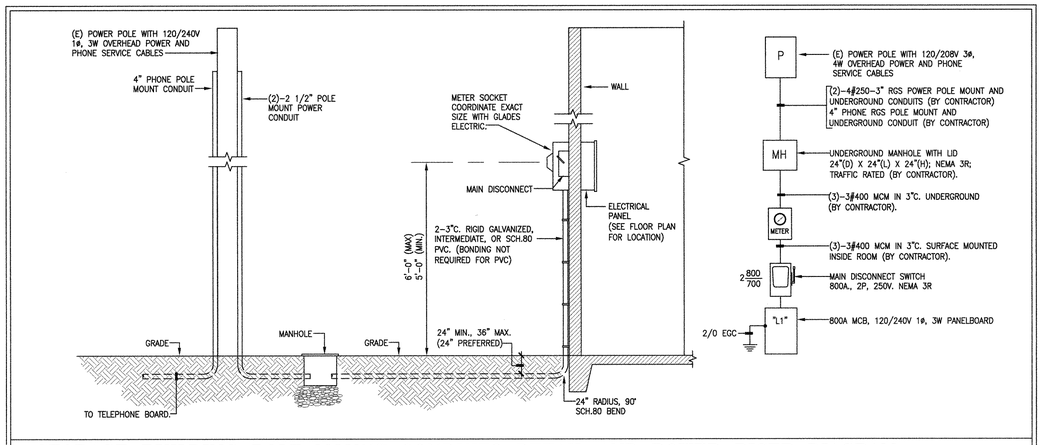

STORAGE BUILDING POLE MOUNT CONDUITS DETAIL AND POWER RISER DIAGRAM
N.T.S.

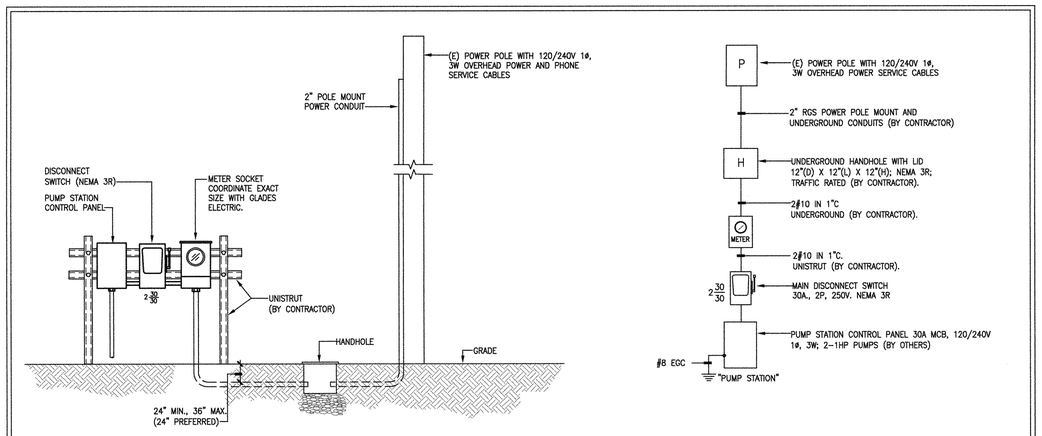

PUMP STATION POLE MOUNT CONDUIT DETAIL AND POWER RISER DIAGRAM
N.T.S.

INSTALATION COORDINATION NOTE:

1- COORDINATE THE ENTIRE POWER AND PHONE SERVICE CONNECTIONS WITH THE UTILITY POWER AND PHONE COMPANIES PRIOR TO COMMENCING OF ANY WORK.

2- CONTACT GLADES ELECTRIC FOR POWER SERVICE CONNECTION.
* TIM LOWMAN – (863) 946-6272
* MARK GOODWIN – (863) 946-6216

WOLFBERG ALVAREZ
ARCHITECTURE ENGINEERING
3225 AVIATION AVE., SUITE 400
MIAMI, FLORIDA 33133
V 305.666.5474
F 305.666.4994
WOLFBERGALVAREZ.COM
AA 002416 EB 002354

SEMINOLE AH-TAH-THI-KI STORAGE BUILDING
34450 W BOUNDARY ROAD
CLEWISTON, FL 33440

SEAL: JULIO E. ALVAREZ, LICENSE No. 14595, STATE OF FLORIDA, PROFESSIONAL ENGINEER

JULIO E. ALVAREZ, P.E.
ELECTRICAL ENGINEER
FLA. REG. NO. 14595

WA PROJECT NO.: 21524.00

ISSUE DATE
05/27/2016

NO.	REVISION DATE

DRAWING TITLE
POWER RISER DIAGRAM AND ELECT. ROOMS

SHEET NUMBER
E6.01

P:\Seminoles Maintenance Building and Restrooms 2015\Drawings\CD\Storage Building\Electrical\E6.01-SMB.dwg Jun 03, 2016 - 8:40am MITOLEDO

To the best of the Architect's or Engineer's knowledge, the plans and specifications comply with the applicable minimum codes and the applicable fire-safety standards as determined by the local authority in accordance with F.B.C. section 110.3.7.4.4 and Chapter 633, Florida Statutes.

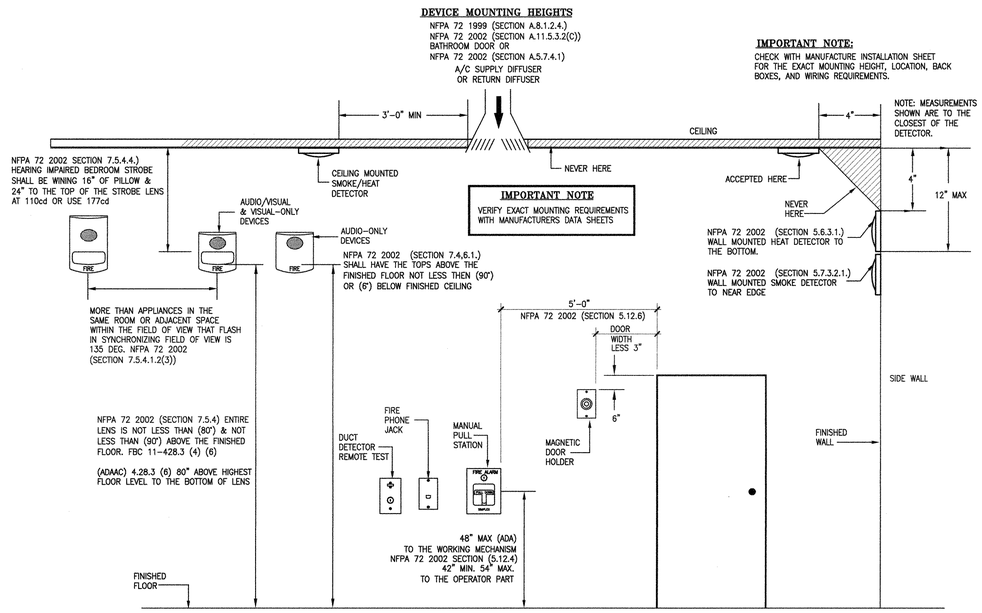

SMOKE DETECTOR DIMENSIONS DETAIL

N.T.S.

FIRE ALARM GENERAL NOTES

1. FIRE ALARM SYSTEM SHALL BE POWER LIMITED UTILIZING POWER LIMITED WIRING:
2. WIRING SHALL BE #12 THHN, #14 THHN OR 18/2 TWISTED SHIELDED PAIR FPL TYPE CABLE.
3. INSTALLATION SHALL COMPLY WITH NFPA 1, 2012, APPLIANCE CHAPTERS.
4. INSTALLATION SHALL COMPLY WITH NFPA 72, 2010, APPLIANCE CHAPTERS.
5. INSTALLATION SHALL COMPLY WITH NFPA 101, 2012, APPLIANCE CHAPTERS.
6. INSTALLATION SHALL COMPLY WITH NEC 2011.
7. CONDUIT, AS APPLIANCE SHALL BE ½" MINIMUM WITH A MAXIMUM FILL OF 40%. COMPLY WITH NEC.
8. SYSTEM SHALL BE GROUNDED PER MANUFACTURER'S SPECIFICATIONS.
9. ALL DEVICES SHALL BE COMPATIBLE PER MANUFACTURE'S SPECIFICATIONS.
10. ALL SPACES SHALL MEET THE AUDIBLE CHARACTERISTICS OF NFPA 72 AND NFPA 101.
11. SMOKE DETECTORS SHALL NOT BE LOCATED WITHIN 36" OF A/C DIFFUSERS, KITCHEN OR BATHROOM DOORS.
12. CEILING MOUNTED DEVICES SHALL BE LOCATED AT A HEIGHT OF 10' +/- ON SMOOTH FLAT CEILING UNLESS OTHERWISE NOTED.
13. SIGNALING LINE CIRCUITS SHALL HAVE A MAXIMUM OF 250 POINTS PER CHANNEL. SEE FLOOR PLANS FOR QUANTITIES & TYPES OF DEVICES.
14. FIRE ALARM PANEL & ANY ASSOCIATED FIRE ALARM TRANSPONDERS SHALL BE FED BY A 120VAC, SINGLE PHASE, 20 AMP., DEDICATED BREAKER.
15. ALL INTERCONNECTED FIRE ALARM PANELS SHALL BE ARRANGED TO FUNCTIONS AS A SINGLE PHASE, 20 AMP, DEDICATED BREAKER.
16. RACKS, SHELVES AND EQUIPMENT ARE ALL LOWER THAN 80" ABOVE FINISHED FLOOR UNLESS OTHERWISE INDICATED.
17. THE DESIGN INSTALLATION COMPLIES WITH FLORIDA BUILDING CODE. 2010 FLORIDA ACCESSIBILITY CODE FOR BUILDING CONSTRUCTION.
18. ROOM CONTAINING FACP AND/OR BOOSTER POWER SUPPLY PANEL(S) IS MECHANICALLY VENTILATED.
19. MAXIMUM MOUNTING HEIGHT FOR ALL PANELS SHALL BE SIX FEET TO THE TOP OF THE ENCLOSURE.
20. MINIMUM CLEAR WORKING SPACE OF THREE FEET IN FRONT OF ALL FIRE ALARM PANELS SHALL BE PROVIDED.
21. VISIBLE NOTIFICATION APPLIANCE ROOM SPACING SHALL BE IN ACCORDANCE WITH NFPA 72 TABLE 7.5.4.3.1(c) WALL MOUNT AND FIGURE 7.5.4.3.1 OR TABLE 7.5.4.3.1(b) CEILING MOUNT. VISIBLE NOTIFICATION APPLIANCE CORRIDOR SPACING SHALL BE IN ACCORDANCE WITH NFPA 72, 2007 7.5.4.4.
22. ALL EQUIPMENT SHALL BE UL LISTED, APPROVED FOR FIRE SERVICE USE AND COMPATIBLE WITH THE CONTROL PANELS.
23. THE FIRE ALARM SYSTEM SHALL CONSIST OF A FIRE DETECTION CONTROL AND NOTIFICATION SYSTEM.
24. THE FIRE ALARM CONTROL PANEL (S) SHALL BE INTELLIGENT AND HAVE STAND BY BATTERY BACKUP AS PER NFPA 72.
25. THE BATTERY SYSTEM SHALL AUTOMATICALLY TRANSFER TO THE STAND BY BATTERIES UPON POWER FAILURE. ALL BATTERY CHARGING AND RECHARGING OPERATIONS SHALL BE AUTOMATIC. BATTERIES ONE DISCHARGING, SHALL RECHARGE AT RATE TO PROVIDE A MINIMUM OF 70% IN 12 HOURS.
26. ALARM NOTIFICATION APPLIANCES SHALL BE VISUAL, AUDITABLE-VISUAL AND/OR AUDIBLE TYPE.
    - AUDIBLE COMPONENTS SHALL BE INSTALLED AS PER NFPA 72 CHAPTER 7.4.
    - VISUAL DEVICES SHALL BE SELECTED AND INSTALLED AS PER NFPA CHAPTER 7.5.
27. ALL INITIATING AND INDICATING CIRCUIT MUST BE SUPERVISED.
28. CIRCUIT POLARITY MUST BE OBSERVED.
29. MANUAL PULL STATION SHALL BE INSTALLED IN ACCORDANCE WITH NFPA 72 CHAPTER 5.1.2 AND THE FLORIDA BUILDING CODE 11-4.28, AT 48" A.F.F.
30. WIRE RUNS ARE SHOWN DIAGRAMMATICALLY, EXACT LOCATION OF ALL EQUIPMENT TO BE DETERMINED IN THE FIELD, BUT SHALL BE CONFORM WITH THE BASIC LAYOUT AS SHOWN ON DRAWINGS TO PREVENT CIRCUIT LOAD.
31. ACTUAL JOB CONDITIONS MAY REQUIRE SLIGHT ALTERATIONS. CONTRACTOR WILL MAKE ANY CORRECTIONS TO DRAWING TO REFLECT THE FIRE ALARM SYSTEM, AS FINALED.
32. THE FIRE ALARM SYSTEM SHALL NOT USED TO POWER ANY UNAUTHORIZED EXTERNAL DEVICE.
33. ALL FIRE STOP PENETRATIONS SHALL BE SEALED WITH AN UL APPROVED FIRE STOP MATERIAL.
34. THE FIRE ALARM SYSTEM SHALL HAVE AN EARTH GROUND CONNECTION AS PER MANUFACTURER'S RECOMMENDATION, NEC AND NFPA 70 ART. 760.
35. A BREAK IN ANY FIELD WIRING OR GROUNDING OF ANY CONDUCTOR WILL RESULT IN THE ACTIVATION OF THE FIRE ALARM CONTROL PANEL (S) "TROUBLE" SIGNAL, WHICH WILL PRODUCE AUDIBLE AND VISIBLE ANNUNCIATION AT THE PANEL (S) AND ANY REMOTE ANNUNCIATOR.
36. THE FIRE ALARM SYSTEM SHALL BE MONITORED AND UL CERTIFIED FOR CENTRAL STATION SERVICE BY UL LISTED CENTRAL STATION SERVICE COMPANY.
37. TWO TELEPHONE LINES SHALL BE PROVIDED TO THE FIRE ALARM COMMUNICATOR PER NFPA 72 CHAPTER 8.5.3.
38. THE COMPLETE FIRE ALARM SYSTEM SHALL BE FULLY TESTED IN ACCORDANCE WITH NFPA 72 BY CONTRACTOR IN PRESENCE OF THE OWNER'S REPRESENTATIVE AND THE LOCAL FIRE MARSHAL.
39. UPON COMPLETION OF THE INSTALLATION A "CERTIFICATE OF COMPLETION" SHALL BE PROVIDED TO THE CUSTOMER AND THE LOCAL AUTHORITY HAVING JURISDICTION. A LOG BOOK SHALL REMAIN ON PREMISES THAT SHALL INCLUDE DRAWINGS, MANUAL, INSPECTION RECORDS, ETC.
40. ALL EQUIPMENT SHALL BE INSTALLED IN CONFORMITY OF THE LIFE SAFETY CODE.
41. ANY AHU ABOVE 2000 CFM AND RETURNS RECIRCULATING OVER 15,000 CFM OR SERVICING MORE THAN ONE FLOOR SHALL BE PROVIDE WITH A DUCT DETECTOR PER NFPA 90A 4-4, NFPA 72 CHAPTER 5.15.5 AND 6.15.
42. AHU SHUT DOWN IS BY RELAY, LOCATED WITH IN 3 FEET OF AHU. THIS MUST USED IN NORMALLY CLOSED POSITION SO THAT A LOSS OF CONTINUITY BETWEEN THE RELAY CONTACTS AND THE UNIT WILL CAUSE AHU SHUT DOWN. RELAY CONTACTS ARE RATED AT 1 AMPS, 120 VAC, 24VDC. UNDER NO CIRCUMSTANCES SHOULD THIS EXCEEDED.
43. EVACUATION SIGNAL SHALL VIA PRE-RECORDED VOICE ANNOUNCEMENTS IN ACCORDANCE WITH NFPA 101.
44. VERIFY ALL MOUNTING HEIGHTS WITH AUTHORITY HAVING JURISDICTION PRIOR INSTALLATION.
45. POWER UP AND POWER DOWN MUST BE DONE IN PROPER SEQUENCE.
    - POWER DOWN
      A. DISCONNECT BATTERY
      B. TURN OFF AC POWER
    - POWER DOWN
      A. DISCONNECT BATTERY
      B. TURN OFF AC POWER
46. THE MAIN FIRE ALARM SYSTEM SHALL BE PROTECTED FROM ATTACK BY FIRE.
47. FIRE ALARM CONTROL CIRCUITS AND ANY REMOTE PANELS MUST BE INSTALLED TO BE PROTECTED FROM PHYSICAL DAMAGE, AS WELL AS ATTACK BY FIRE AS PER NFPA 72.
48. "NO PIPING, CONDUIT OR DUCT WORK SHALL BE INSTALLED WITHIN ANY EXIT ENCLOSURE UNLESS SERVING THAT ENCLOSURE."

SCOPE OF WORK

1. PROVIDED AND INSTALL SYSTEM AS SHOWN ON DRAWINGS.
2. SIGNALING LINE CIRCUIT WIRING SHALL BE STYLE 4.
3. ADDRESSABLE NOTIFICATION APPLIANCE CIRCUIT WIRING SHALL BR STYLE Y.
4. THIS SYSTEM SHALL BE A CERTIFICATED OR PLACARDED CENTRAL STATION SERVICE PE NFPA-71.8.3.

SEQUENCE OF OPERATION:

UPON ACTIVATION OF ANY MANUAL STATION HE FOLLOWING SHALL OCCUR:

1. ALL HORNS WILL SOUND UNTIL SYSTEM IS SILENCED.
2. ALL STROBES WILL FLASH UNTIL SYSTEM IS SILENCED.
3. AN ALARM SIGNAL SHALL BE SENT TO THE FACP & REMOTE ANNUNCIATOR.
4. A SIGNAL SHALL BE SENT TO THE OWNERS LISTED CENTRAL STATION VIA DACT.

UPON ACTIVATION OF ANY AUTOMATIC DEVICE THE FOLLOWING SHALL OCCUR:

1. ALL HORNS WILL SOUND UNTIL SYSTEM IS SILENCED.
2. ALL STROBES WILL FLASH UNTIL SYSTEM IS SILENCED.
3. AN ALARM SIGNAL SHALL BE SENT TO THE FACP & REMOTE ANNUNCIATOR.
4. A SIGNAL SHALL BE SENT TO THE OWNERS LISTED CENTRAL STATION VIA DACT.
5. ALL AIR HANDLER UNITS SHALL SHUT DOWN.

FIRE ALARM SYSTEM SHOP DRAWING NOTE

1. THE CONTRACTOR SHALL SUBMIT COMPLETE SET OF FIRE ALARM SYSTEM SHOP DRAWINGS FOR REVIEW AND APPROVAL BY THE FIRE MARSHALL. THE SHOP DRAWINGS SHALL INCLUDE (BUT NOT LIMITED TO) THE FOLLOWING: $\frac{1}{8}$" SCALE FLOOR PLANS SHOWING ALL DEVICES AND ASSOCIATED WIRING CONNECTIONS, WIRING DIAGRAMS, RISER DRAWINGS, BATTERY LOAD CALCULATIONS, VOLTAGE DROP CALCULATIONS, DEVICE SPECIFICATIONS, AND COMPLETE SEQUENCE OF OPERATIONS.
2. THE CONTRACTOR SHALL PROVIDE ALL EQUIPMENT AND MATERIALS NECESSARY FOR A COMPLETE AND FUNCTIONAL FIRE ALARM SYSTEM WITH VOICE EVACUATION PER NFPA 72 AND NFPA 101 AND THE LOCAL FIRE MARSHALL REQUIREMENTS.

NOTES:

1) VERIFY LOCATION OF FLOW AND TAMPERS.
2) VERIFY LOCATION OF BACK FLOW AND PIV.
3) ALL PULL STATIONS SHALL BE COVERED WITH CLEAR PLASTIC HINGED COVER.

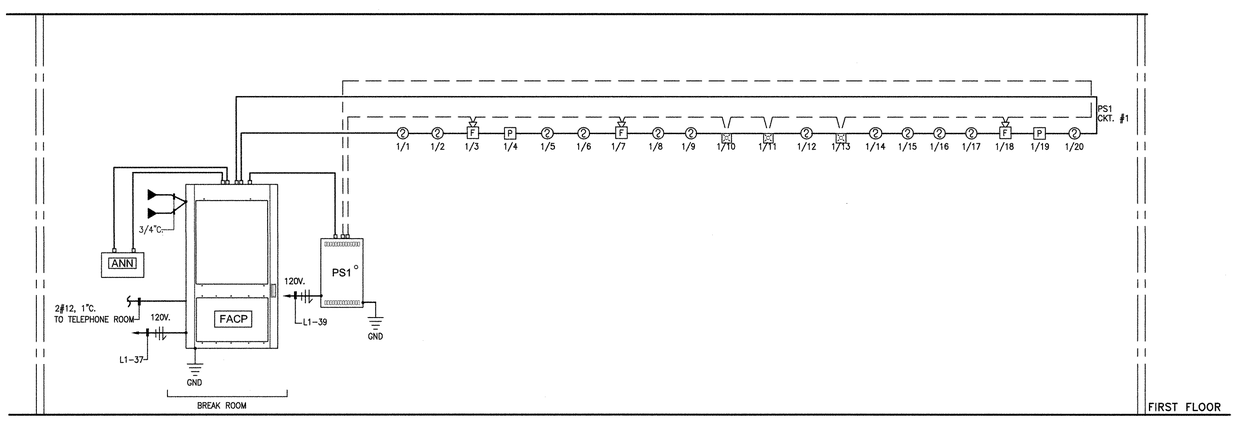

FIRE ALARM RISER DIAGRAM

N.T.S.

WOLFBERG ALVAREZ
ARCHITECTURE · ENGINEERING
3225 AVIATION AVE., SUITE 400
MIAMI, FLORIDA 33133
V 305.666.5474
F 305.666.4994
WOLFBERGALVAREZ.COM
AA 002416 EB 002354

SEMINOLE AH-TAH-THI-KI STORAGE BUILDING
34450 W BOUNDARY ROAD
CLEWISTON, FL 33440

SEAL

JULIO E. ALVAREZ, P.E.
ELECTRICAL ENGINEER
FLA. REG. NO. 14595

WA PROJECT NO.: 21524.00

ISSUE DATE
05/27/2016

NO.	REVISION DATE

DRAWING TITLE
FIRE ALARM RISER & NOTES

SHEET NUMBER
E6.02

P:\Seminoles Maintenance Building and Restrooms 2015\Drawings\CD\Storage Building\Electrical\E6.02-SMB.dwg Jun 03, 2016 - 8:41am MYOLEIO

To the best of the Architect's or Engineer's knowledge, the plans and specifications comply with the applicable minimum codes and the applicable fire-safety standards as determined by the local authority in accordance with F.B.C. section 110.3.7.4.4 and Chapter 633, Florida Statutes.

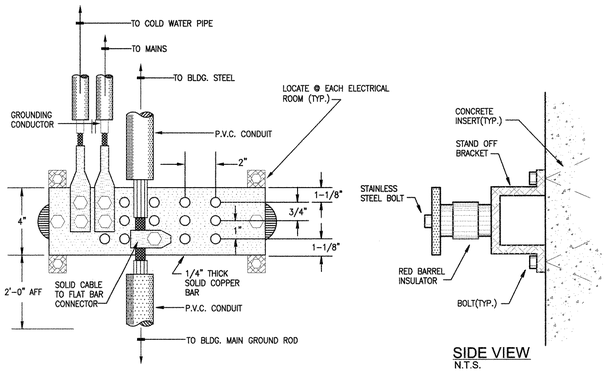

1 MAIN GROUND BAR
N.T.S.

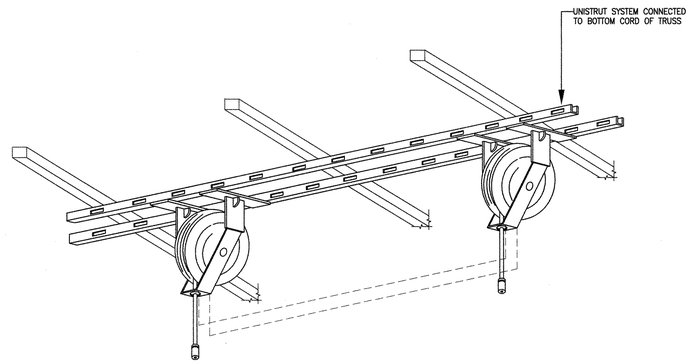

2 CORD REEL RECEPTACLES SUPPORTING DETAIL
N.T.S.

WOLFBERG ALVAREZ
ARCHITECTURE · ENGINEERING
3225 AVIATION AVE., SUITE 400
MIAMI, FLORIDA 33133
V 305.666.5474
F 305.666.4994
WOLFBERGALVAREZ.COM
AA 002416 EB 002354

SEMINOLE AH-TAH-THI-KI STORAGE BUILDING
34450 W BOUNDARY ROAD
CLEWISTON, FL 33440

SEAL
JULIO E. ALVAREZ, P.E.
ELECTRICAL ENGINEER
FLA. REG. NO. 14595

WA PROJECT NO.: 21524.00

ISSUE DATE
05/27/2016

NO.	REVISION DATE

DRAWING TITLE
DETAILS

SHEET NUMBER
E7.01

P:\Seminoles Maintenance Building and Restrooms 2015\Drawings\CD\Storage Building\Electrical\E7.01-SMB.dwg Jun 03, 2016 - 8:41am MTOLEDO

To the best of the Architect's or Engineer's knowledge, the plans and specifications comply with the applicable minimum codes and the applicable fire-safety standards as determined by the local authority in accordance with F.B.C. section 110.3.7.4.4 and Chapter 633, Florida Statutes.