Radio Interface Cable

For NCS-C250 Mobile Multi-Switcher

NCS Model Number

NCS-250-ACA-XX

Compatible Radios:

EDACS 500M

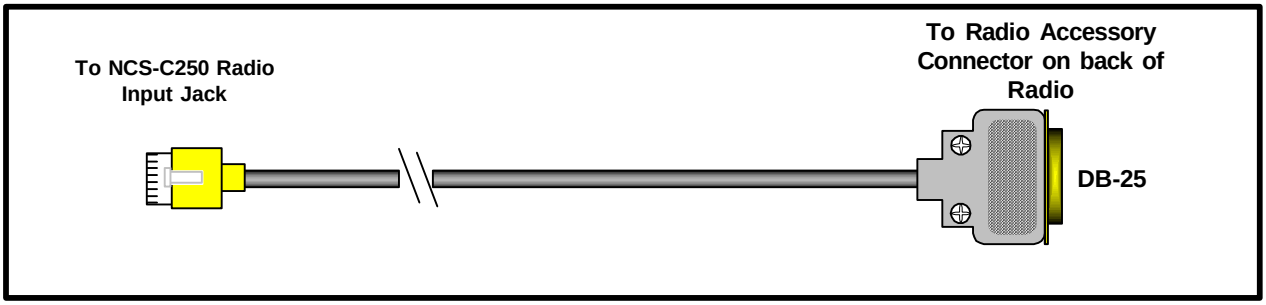

RJ-45

Pin #	Wire Color	Function
1	White	Mic Hi
2	Green	Mic Lo
3	Brown	PTT
4	Black	Ground
5	Yellow	Rx Audio
6	Shield	Ground
7	Red	NC
8	Orange	COR

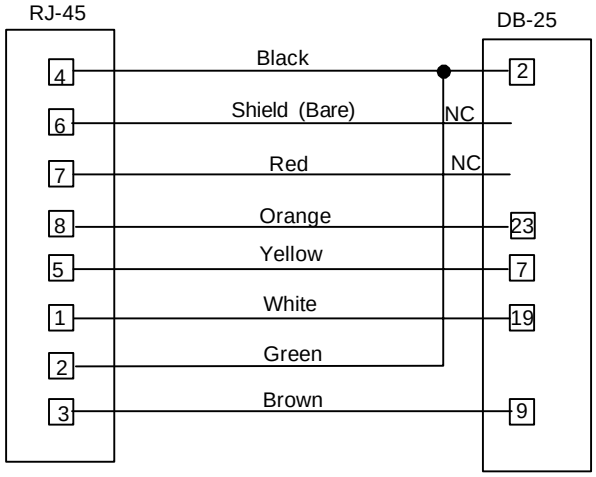

Cable Wiring

Notes:

1. Program *External Mute*, active high output 1 for COR on Pin 23
2. Program *Aux Input 2* (pin 9) for PTT
3. In order for the receive audio (XTONDEC) to be connected to Pin 7 of the DB-25, remove the control head of the radio and remove the wire from pin 6 of J602 and jumper to Pin 7 of J605.