IMPORTANT NOTICE

NO DAMAGE WAS FOUND ON ALL FOUNDATION & CONCRETE SLAB.
NO DAMAGE WAS OBSERVED IN SHEAR WALLS.
NO CHANGES TO ALL LATERAL LOAD RESISTING SYSTEM.

DEMOLITION NOTES :

1. FOLLOW ALL CURRENT BUILDING CODES.
2. CONTRACTOR TO PROVIDE ALL REQUIRED SHORING AND BRACING PRIOR TO AND DURING ANY DEMOLITION.
3. CONTRACTOR TO PROVIDE ALL REQUIRED WATER PROTECTION FROM THE ELEMENTS PRIOR TO AND DURING DEMOLITION & CONSTRUCTION. PROVIDE PROTECTION OF ADJACENT FINISH SURFACES AND ADJOINING SPACES DURING CONSTRUCTION. ALL AREAS NOT IMPACTED BY CONSTRUCTION SHALL BE LEFT IN SAME CONDITION FOUND PRIOR TO START OF CONSTRUCTION.
4. ALL DEMOLITION WORK SHALL AT ALL TIMES BE UNDER THE IMMEDIATE SUPERVISION OF A PERSON WITH PROPER EXPERIENCE, TRAINING & AUTHORITY.
5. THE CONTRACTOR WILL BE REQUIRED TO PROVIDE A DUST-FREE BARRIER BETWEEN ALL WORK AREAS AS REQUIRED TO PROTECT FINISH WORK. THESE BARRIER'S SHALL BE LEFT DURING ALL PHASES OF CONSTRUCTION.

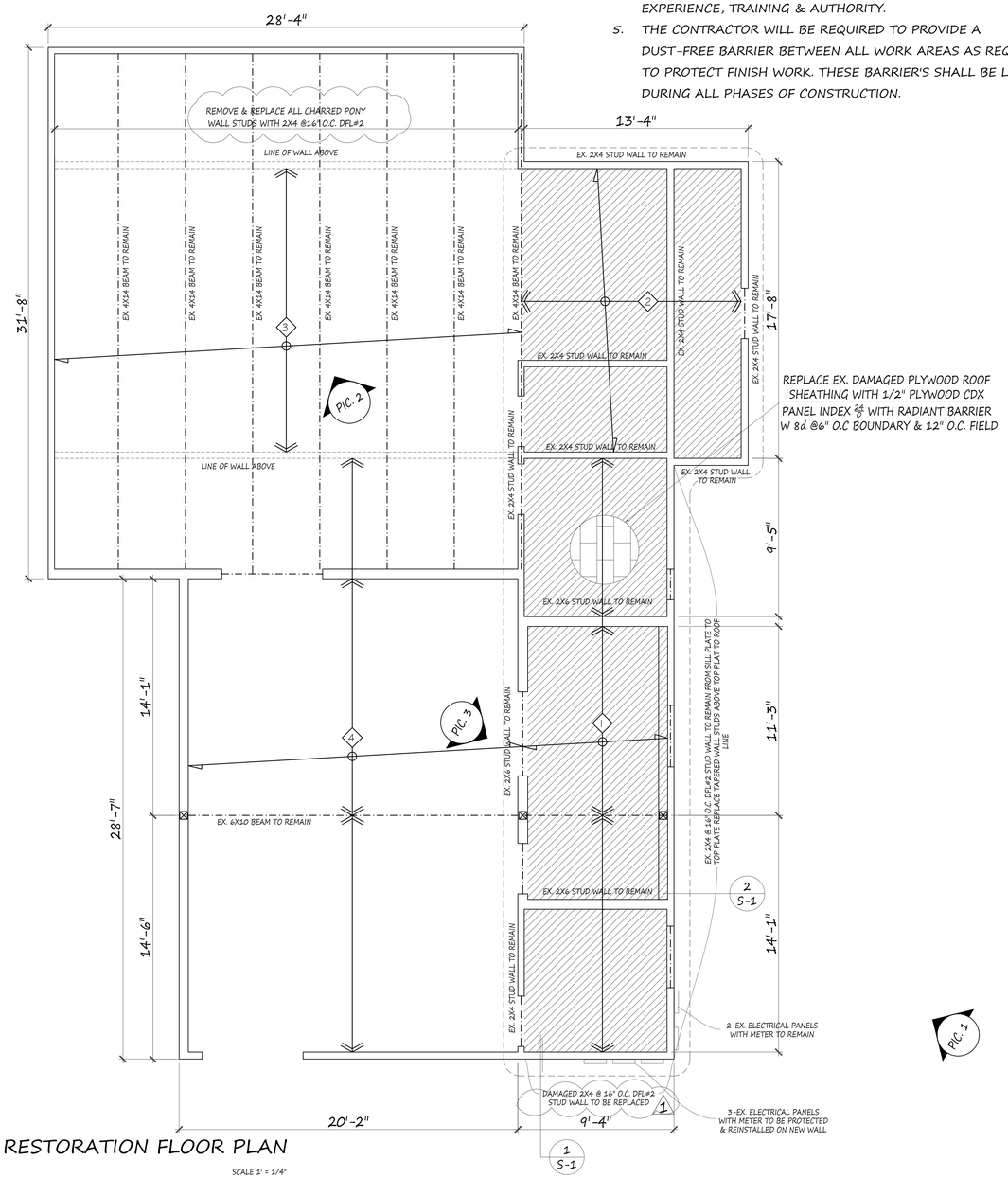

REPLACE EX. DAMAGED PLYWOOD ROOF SHEATHING WITH 1/2" PLYWOOD CDX PANEL INDEX 24/0 WITH RADIANT BARRIER W 8d @6" O.C BOUNDARY & 12" O.C. FIELD

RESTORATION FLOOR PLAN

SCALE 1' = 1/4"

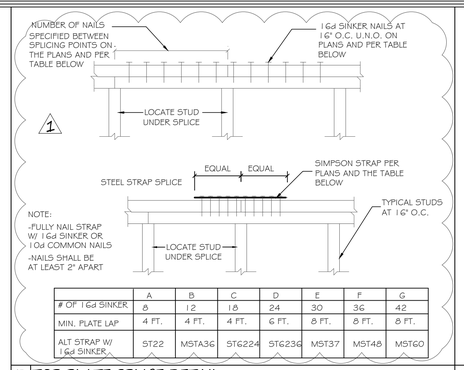

	A	B	C	D	E	F	G
# OF 16d SINKER	8	12	18	24	30	36	42
MIN. PLATE LAP	4 FT.	4 FT.	4 FT.	6 FT.	8 FT.	8 FT.	8 FT.
ALT STRAP W/ 16d SINKER	ST22	MSTA36	ST6224	ST6236	MST37	MST48	MST60

3 TOP PLATE SPLICE DETAIL

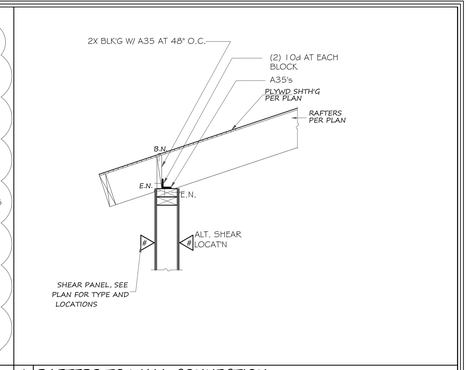

1 RAFTERS TO WALL CONNECTION

PICTURE #1

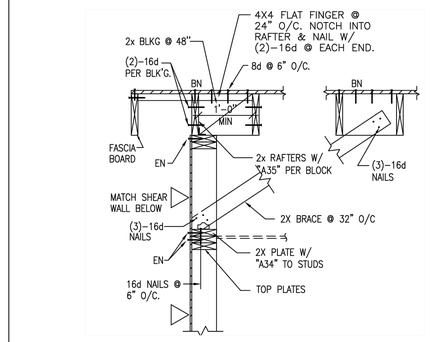

2 RAFTERS TO EXTERIOR WALL CONNECTION

PICTURE #2

PICTURE #3

FRAMING LEGEND

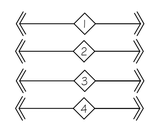

EX. DAMAGED 2 X 8 @ 24" O.C. ROOF RAFTERS TO BE REPLACED BY 2X8 @ 24" O.C. DFL#2

EX. DAMAGED 2 X 6 @ 24" O.C. ROOF RAFTERS TO BE REPLACED BY 2X8 @ 24" O.C. DFL#2

EX. 2 X ROOF RAFTERS @24" O.C. TO REMAIN

EX. 2X ROOF RAFTERS @ 24" O.C. TO REMAIN

MATERIAL SPECIFICATIONS:

- DOUGLAS FIR-LARCH FRAMING WOOD: "DOC PS 20-05"
- WOOD STRUCTURAL PANELS: "DOC PS 1-07 OR DOC PS 2-04"
- STRUCTURAL CONCRETE STRENGTH SHALL BE MINIMUM 2500 PSI

EXISTING STRUCTURE NOTE:

1

1. ALL WORK SHALL BE IN ACCORDANCE WITH THE 2016 C.B.C. AND 2017 COUNTY OF LOS ANGELES CODES.
2. CONTRACTOR SHALL CHECK ALL EXISTING STRUCTURAL WOOD MEMBERS (RAFTERS, JOIST, STUDS, BEAMS, POSTS, STRINGERS, ETC.). REMOVE ALL DETERIORATING WOOD MEMBERS AND REPLACE THEM WITH THE SAME OR BETTER SECTION PROPERTIES AND USING STRUCTURAL 1 GRADE LUMBER.
3. ALL EXISTING FOOTINGS TO BE USED ONLY UNDER THE FOLLOWING CONDITION:
   THE EXISTING FOOTING HAS THE SAME SECTION AS THAT OF THE REQUIRED NEW FOOTING.
4. IF (E) CONT. FTG DOES NOT OCCUR AS SHOWN ON PLAN, THEN UNDERPIN THE FTG S TO MATCH THE PROPOSED SECTION.

IMPORTANT NOTICE

DUE TO NATURE OF THIS JOB ,THE DESIGN HAS BEEN ACHIEVED ACCORDING TO AVAILABLE INFORMATION, ANY DISCREPANCIES MUST BE REPORTED TO THE ENGINEER OF RECORD . (CONTRACTOR TO VERIFIED)

ALPHA OMEGA ENGINEERING
12440 EXCALIBUR DR. CORONA, CA 92880
T: (909) 348-7295 FAX: (909) 348-7669 .
e-mail: alomega@verizon.net

PROJECT : FIRE DAMAGE RESTORATION
OWNER : MR. PETER THOTTAM
PROJECT LOCATION : 13120 PEARBLOSSOM HWY SUITE B PEARBLOSSOM, CA

STAMP

REGISTERED PROFESSIONAL ENGINEER
EHAB MINA
No. C-62846
Exp. 06/30/20
STATE OF CALIFORNIA

REVISIONS
1 09/12/2018
2
3
4
5
6
7
8
9
10

DATE: 11/05/17
SCALE: 1' = 1/4'
FILE NAME:
PROJECT NUMBER:
PROJECT MANAGER:
DRAWN BY:

SHEET NUMBER

S-1

SHEET TITLE
STRUCTURAL RESTORATION PLAN