Steele's saje™

Shearing Machine

985.848.5133

# WHEN YOU SHEAR, SHEAR WITH A SAJE®

## Clockwise or Counter-Clockwise

### Benefits

- Cut shearing time by 80%
- Reduce shearing cost by 50%
- One cut perfection
- One SAJE eliminates three laborers
- No more arm fatigue from knife swinging
- Successful on Pines, Firs and Spruce
- Total control of shearing tightness (or openness)
- Cutter blade self-sharpens
- Used by people of all ages
- Excellent for shearing Junipers and other Ornamentals also.

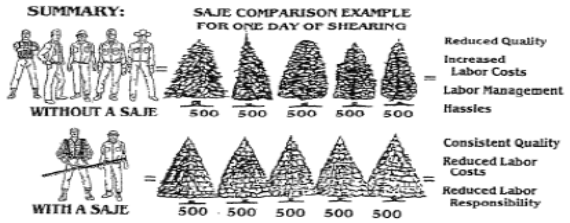


### Blade & Blade Extension

- 2' bolt on blade extension fits most SAJE blades (HE2; HE2A; HS500) (Models)
- Wide & Long teeth allow faster and crisper shearing!

- Continuous blade length yields a quality cut with consistency
- Double reciprocating, self sharpening (HS-524, 2' Bolt on Blade Extension, 2lbs.)

***For our customers with older machines, we offer a full line of shop service and parts***

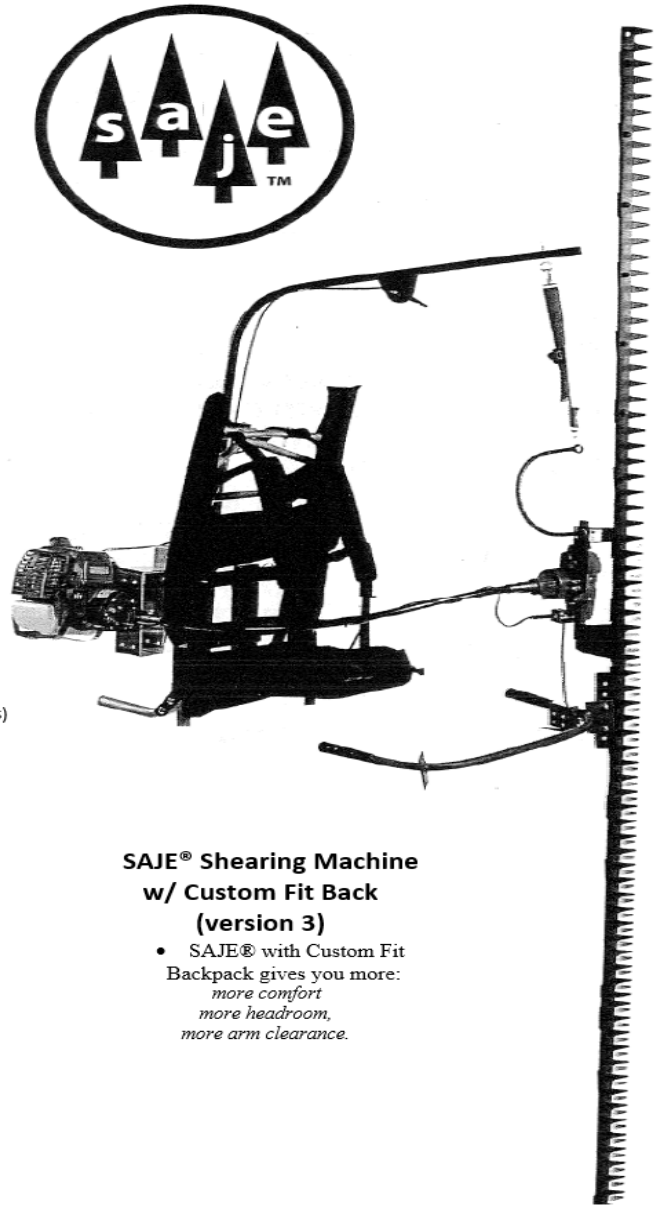

**SAJE® Shearing Machine w/ Custom Fit Back (version 3)**

- SAJE® with Custom Fit Backpack gives you more:
  *more comfort*
  *more headroom,*
  *more arm clearance.*

## INTRODUCTION

READ THIS MANUAL CAREFULLY, IT WILL INSTRUCT YOU ON HOW TO OPERATE AND SERVICE YOUR MACHINE SAFELY AND CORRECTLY. FAILURE TO DO SO COULD RESULT IN PERSONAL INJURY AND/OR EQUIPMENT DAMAGE.

THE SAFETY ALERT SYMBOL MEANS **ATTENTION! BE ALERT!** YOUR SAFETY IS INVOLVED. WHEN YOU SEE THE CAUTION SYMBOL, BE ALERT TO THE POSSIBILITY OF SERIOUS BODILY INJURY OR DEATH. CAREFULLY FOLLOW THE INSTRUCTIONS IN THE SAFETY MESSAGE.

WARRANTY IS PROVIDED FOR CUSTOMERS WHO OPERATE AND MAINTAIN THEIR EQUIPMENT AS DESCRIBED IN THIS MANUAL. SEE COMPLETE WARRANTY AT THE BACK OF THIS OPERATORS MANUAL.

## CONTENTS



**NOTE: CONTACT YOUR LOCAL ENGINE DEALER FOR ENGINE REPLACEMENT PARTS.**

## DESCRIPTION

THE SAJE SHEAR MODEL HS-600 SERIES IS DESIGNED FOR SHEARING CHRISTMAS TREES. HOWEVER, THE SHEAR WILL CUT ANY TYPE CONIFER WITH BRANCH THICKNESS OF 1/2 INCH IN DIAMETER, OR LESS. THE HS-600 SERIES MACHINES CAN BE USED TO SHEAR EITHER CLOCKWISE OR COUNTER-CLOCKWISE. 72" MODEL MUST HAVE A 2' EXTENSION ATTACHED FOR CLOCKWISE SHEARING.

## TECHNICAL DATA

| | | | |
|---|---|---|---|
| Weight | | Pounds | Approx 38 (entire unit) |
| Engine | Type<br>Displacement<br>Max Revolution<br>Carburetor<br>Ignition<br>Gear<br>Gear Lubrication<br>Spark Plug<br>Starter<br>Clutch | <br>cc (cu. in.)<br><br>rpm | Air cooled, 2-cycle, vert cylinder<br>24.1 (1.5)<br>7500<br>TK-DPN, diaphragm type<br>Electronic, Transistor controlled<br>Ratio 2:1 Reduction<br>SAE 80/90 gear oil<br>Champion CJ-8Y<br>Recoil<br>Auto Centrifugal w/ bevel gear |
| Fuel | Octane<br><br>Mixing Ratio<br><br><br>Tank capacity | <br><br><br><br><br>Fl oz | 91-92<br><br>Mixture regular gas (leaded or unleaded) and air cooled 2-stroke oil.<br>50:1<br><br>20.3 |
| Blade | Action<br><br>Gear<br><br>Lubrication | | Double reciprocating, single edge<br><br>Ratio 5.1:1 reduction<br><br>good grafite or molly base grease |

## EASY REFERENCE

| CLOCKWISE SHEARING | COUNTER-CLOCKWISE SHEARING |
|---|---|
| Engine on left rear | Engine on right rear |
| Suspension neck swivel to right | Suspension neck swivel to left |
| Handlebar on "wide" end of gearbox | Handlebar on "narrow" end of gearbox |

# SAFETY

**OBSERVE SAFETY SIGNS:**

**DANGER:** THIS MESSAGE DENOTES THE MOST SERIOUS SPECIFIC POTENTIAL HAZARD. THE SIGN WILL HAVE THE COLOR COMBINATION OF RED AND WHITE.

**WARNING:** THIS MESSAGE DENOTES A SPECIFIC POTENTIAL HAZARD. THE SIGN WILL HAVE THE COLOR COMBINATION OF YELLOW AND BLACK.

**CAUTION:** THIS MESSAGE DENOTES A REMINDER OF SAFETY PRACTICES. THE SIGN WILL HAVE THE COLOR COMBINATION OF YELLOW AND BLACK.

CAREFULLY READ AND FOLLOW ALL SAFETY SIGNS. RE-INSTALL SAFETY SIGNS THAT ARE DAMAGED OR MISSING.

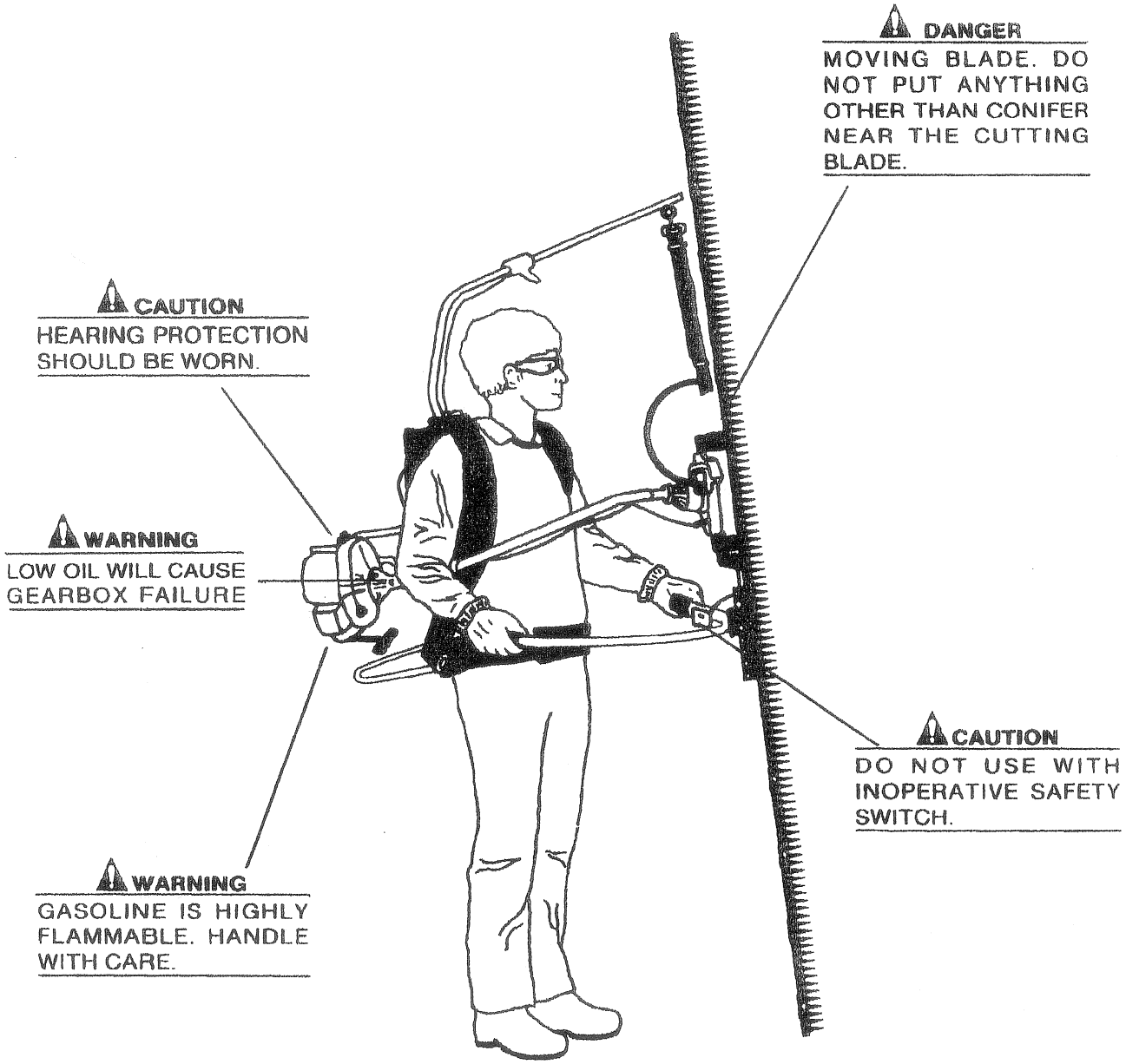

# SAFETY

**LEARN MACHINE SAFETY**

- Carefully read this manual. Learn how to operate the machine safely.
- Do not let anyone operate this machine without proper instruction.
- Unauthorized modification to the machine may impair the function and/or safety of the machine.
- Obey rules and/or regulations in your area.

**STAY CLEAR OF RECIPROCATING BLADES**

- Entanglement in reciprocating blades can cause serious injury or death.
- Disengage safety switch and make sure unit is completely shut off and stopped before:
  A) Cleaning debris from cutter blades.
  B) Servicing blades.
  C) Adjusting blades.
  D) Transporting unit.

**PROTECT BYSTANDERS**

- Never operate machine near people or animals.
- Never let anyone operate machine without proper instruction.
- When two or more operators are working together, a safe distance should be kept between them.

**INSPECT MACHINE CAREFULLY**

- Check for loose hardware.

**PRACTICE PERSONAL SAFETY**

- Wear safety equipment and fairly tight clothing.
- Use only during daylight hours.

**OPERATE MACHINE SAFELY**

- Keep hands, feet, and clothing away from cutting blades.
- Do not operate machine in unventilated areas. Exhaust gas is highly poisonous.
- Use only cutter blade designed by Steele's for this model. Make sure that the blades are correctly attached. When crack or other defect is noticed on cutter blade, never use it, contact Steele's.
- Before accelerating engine, make sure that the cutter blade is not touching anything.
- Do not smoke when operating.
- Be sure of your footing when operating.
- Always hold the unit firmly with both hands, with the thumb and fingers encircling the handle.
- To avoid hitting small stones or other debris, do not cut too close to the ground.
- Switch off the engine before setting down the unit.
- When transporting, sit pack unit upright, or, where necessary, lay pack on engine with shaft facing upward.

**CAUTION:** Do not operate when you are fatigued or under the influence of drugs or alcohol. Personal injury or death can occur.

- Fatigue, drugs, and alcohol can cause carelessness.
- Take sufficient rest periods.
- Be more cautious before rest periods and before the end of the day.

**CAUTION:** Gasoline is highly flammable.

- Always store gasoline in an approved container.
- Handle at a clean and cleared place and away from fire.
- Do not smoke when handling fuel.
- Always stop the engine to refuel the tank.
- Do not refuel a hot engine. Wait until it has cooled down.
- Always remove fuel cap slowly in order to relieve any pressure built up in tank.
- Avoid spilling fuel or oil.
- Spilled fuel should always be wiped up.
- Move at least 10 feet away from fueling point before starting engine.
- Do not remove the fuel tank cap when engine is still warm or running.
- Should warning label on fuel tank become damaged or missing, replace it with a new one.

**CAUTION:** Do not use with an inoperative safety switch.

**TRANSPORT MACHINE SAFELY:**

- Be sure unit is turned off before transporting.
- Always disconnect safety switch plug, drive shaft, and carrying strap from cutter blade before transporting.
- Secure unit with rope when necessary.

# ASSEMBLY INSTRUCTIONS

1. Look at the picture on page 2 of this operator's manual.

2. Lay out contents of all three (3) shipping containers on a large, clean surface.
    a. The first box will contain the bladeset.
    b. The Second box contains the Gooseneck with carrying strap.
    c. The third box contains the backpack with pads, belt, and shoulder straps attached. The engine with gearbox attached will be in this box, but not attached to pack. Also inside this box will be another, smaller box. This smaller box will contain the flexible drive shaft with wires, carrying rod, handle bar with safety switch, engine bracket, motor spacer (3 in. X 8 in. X 2 ½ in. thick aluminum), and gearbox adaptor.

3. Attaching engine to backpack:
    a. The Motor Spacer (page 16) is used to move the engine further away from your body, this can be used, but is not necessary. Motor Spacer mounts to backpack then the engine to the spacer.
    b. For **clockwise shearing**, attach engine bracket (5 ¼ in. wide x 4 ¾ in. high x 2 in. thick) to gearbox on engine. Attach engine to **left rear** of backpack using two (2) bolts provided.
    c. For **counter-clockwise shearing**, attach engine to bracket on **right rear** of backpack using two (2) bolts provided. Attach engine with neck facing forward. The engine bracket can be used, but is not necessary.

4. Slide Gooseneck (page 14, item 2) through hole in backpack. Secure bottom of neck with nut provided. For **clockwise shearing, swivel neck to right front** and secure with bolt provided. For **counter-clockwise shearing, swivel neck to left front** and secure with bolt provided.

5. Connect the throttle wire (page 14, item 12) to the throttle lever. **CAUTION: Do Not Over-Tighten Lever Screw**.

6. With the two (2) bolts provided, attach the handlebar (page 11, item 71) to the handlebar bracket on the bladeset. The handlebar bracket is attached to the bladeset for counter-clockwise shearing. For clockwise shearing, move this bracket to the opposite side of the blade gear box.

7. Attach the two (2) wires from the safety switch (page 13, item 5) on the handlebar to the plug-in receptacle (page 13, item 7) on the gearbox.
8. Attach carrying rod (page 11, item 77) to center hole of hanging plate on bladeset for 96" or directly to Blade Gearbox for 72".
9. Grease inner drive shaft core with good quality molly based grease and slide into flexible shaft housing. Insure brass sleeve on inner core is at end of housing with the grease fitting.
10. Slide flexible drive shaft (end with grease fitting) into front of engine. Insure inner core is lined up with square hole inside the engine. Tighten two (2) screws to hold in place.
11. Check all bolts, nuts and screws for security.
12. Check **2:1 reduction gearbox on engine** for proper lubrication, fill to lower filler plug with 80/90 gear oil.
13. **Blade Gearbox** is properly greased from the factory, grease daily.
14. Read this operator's manual thoroughly.
15. Mix fuel following instructions on page 5.
16. Put on your SAJE hat and go to work.
17. Adjust belts on custom fit backpack per guide lines on page 17.

**Experiment with different blade speeds—normally a slow blade speed will do a superior cutting job. Running blades too fast will cause them to break.**

## STORAGE

1. Inspect and adjust every part of the machine.
    - Completely clean every part and repair if necessary.
    - Apply thin coat of oil on metal parts to prevent rust.
2. Drain fuel tank, pull starter slowly a few times to drain fuel from carburetor.
3. Pour a small amount of clean motor oil into spark plug hole, pull starter and crank engine until TOP DEAD CENTER.
4. Lubricate the cutter blades with a heavy coat of motor oil to avoid rusting.
5. Store upright in dry area, free from dust.

## OPERATION

**NOTE:** Check for loose nuts, bolts, and screws each day before using the unit.

**FUEL:**

- Fuel used for this model is a mixture of regular grade gasoline (91-92 octane) and an air cooled two stroke engine oil of a <u>REPUTABLE BRAND NAME AND HIGH QUALITY.</u>
- Mixture ratio is gasoline 50 parts: oil 1 part – or mix as oil container instructs. Insure mixture ratio is correct.
    - Pour ½ of the gasoline into a safe, clean container, add oil and mix thoroughly.
    - Now add the remainder of the gasoline and mix again.
    - Do not use motor oil other than that recommended above.
    - Do not mix directly in engine fuel tank.
- After refueling, secure the fuel tank cap and wipe away all spilled fuel with a dry cloth.

**STARTING A COLD ENGINE**

- Place pack frame upright on flat surface.
- Pump primer until fuel movement is visible.
- Pull choke lever to "start" position.
- Pull recoil starter until engine fires.
- Push choke lever to "run" position and, if necessary, restart engine and allow to warm up 3-5 minutes.

**CONNECTING DRIVE SHAFT**

- When attaching drive shaft to engine, make sure the housing is all the way into the Gearbox. There should be approximately 3/4" of the inner core sticking out of the far end of the outer shaft housing.
- With the engine running at idle, hook the carrying rod (page 11, item 77) to the carrying strap.
- Depress locking pin on gearbox adaptor (page 11, item 63) and insert flexible drive shaft. With the engine at idle the shaft core should **NOT** be turning.
- Release locking pin.

**NOTE**: Do not use force when connecting flexible drive shaft. The square shaft must align with the square hole in the gearbox adaptor. Rock the blades or increase the engine speed momentarily to align the shaft. Never attempt to connect shaft while shaft is turning. Insure that the flexible drive shaft is fully seated and the locking pin has "snapped" back before using the SAJE-Shear.

**CONNECTING SAFETY SWITCH**

- Leave the plug (page 13, item 10) unplugged until preparations are complete and you are ready to begin shearing.
- With the engine running, depress the safety switch and hold while firmly plugging in.
- To test the safety switch, with the engine running, release the switch, the engine should die. If engine continues to run, re-check installation.

**STOPPING ENGINE:**

- REDUCE THROTTLE and allow to run at idle for 2-3 minutes.
- Release safety switch. Engine should stop.
- Do not leave engine running while unattended.

**TREE SHEARING:**

If the cutter blade thru-bolts are not adjusted properly the SAJE Shear will not operate efficiently. A periodic check should be made to insure that there is no gap between the blades, and the wear plates on each thru-bolt can be moved slightly by hand.

- To operate after idling hold the SAJE Shear firmly, advance throttle to accelerate engine. Hold so cutting teeth are angled slightly toward the tree and proceed to cut. The unit is designed to cut any type of conifer, however, thickness of branches should not exceed ½ inch in diameter.
- Be careful of hidden objects near the ground which may damage the shear blades.
- The engine continues running even when the blades have stopped due to an excessive load. In such cases stop the engine and remove the cause of the overload before again starting the engine and resuming the job.

**NOTE 1:** Experiment with different blade speeds. Normally a slow blade speed will do a superior cutting job. Running blades excessively fast will cause blades to break. If this should happen, call 985-848-5133 for repairs.

**NOTE 2:** The 2' extension must be used on the 72" blade for clockwise shearing.

**CAUTION**

**USE SAJE SHEAR PROPERLY** – Use only for shearing the types of growth described above.

**DO NOT OVERREACH OR STAND ON UNSTABLE SUPPORT –** Keep good footing and balance at all times.

**MULTIPLE OPERATORS** – Keep a safe distance between two or more operators when working simultaneously (at least one row of trees).

**DO NOT ALLOW EITHER PEOPLE OR ANIMALS INTO THE WORK AREA.**

In an emergency should the safety switch fail to stop the engine, pull the choke lever to the "closed" position and the engine will slowly come to a standstill. Have the safety switch repaired or replaced before using the unit again.

**DRESS PROPERLY** – Do not wear loose clothing or jewelry. They can be caught in moving parts. Use of sturdy gloves, non-skid footwear, safety glasses and hearing protection is recommended.

**CUTTING HAZARD – KEEP HANDS AWAY FROM CUTTING BLADES** – Keep both hands on handlebar when power is on. Do not attempt to remove cut material nor hold material to be cut when blades are moving. Make sure engine is off when clearing jammed material from the cutting blades.

**READ SAFETY PRECAUTIONS CAREFULLY BEFORE OPERATING UNIT.**

## MAINTENACE AND CARE

ALWAYS KEEP THE UNIT CLEAN

### AIR FILTER

- Check before every use—remove air cleaner cover with filter.
- Brush off dust lightly or wash it in a non-flammable solvent if necessary.
- Dry it completely before re-installation.

### FUEL STRAINER

- Check periodically
  - Do not allow dust to enter into fuel tank.
  - Clogged strainer will cause difficulty in starting engine or abnormalities in engine performance.
  - Pick up fuel strainer through fuel inlet port with a piece of steel wire or the like.
  - When strainer is dirty, wash it in a suitable cleaning solvent.

### BLADE LUBRICATION

- Spray the entire length of the cutting teeth after each 50 trees sheared. Use of a fine spray nozzle with diesel fuel, or Zep 45, is recommended.
- To obtain trouble free trimming, it is necessary to remove gum that collects on the blades. This should be done with a 50:50 mixture of kerosene and machine oil after each day's use.

### GEAR HOUSING

- The blade gear housing has been lubricated with a specific grease.
- Apply grease approximately every eight hours under normal operation—5 full strokes with a standard-size grease gun.
- When blades are replaced, or any other time that the bottom cover plate is removed, check for proper amount of grease in gear housing (approx. 2.5 oz or 70 g) and use a new gasket to insure proper sealing of cover plate.

**NOTE:** Any good graphite or molly based grease is recommended.

### DRIVE SHAFT

- The flexible drive shaft should be greased daily using the grease fitting on the engine end of the shaft—1 Stroke with a standard-size grease gun.
- Let the flexible drive shaft hang down toward the ground when greasing.
- Add grease slowly with engine running and shaft turning slowly.
- The drive shaft must be removed, cleaned, and lubricated every 50 hours of operation.
  - Loosen the two clamp screws on 2:1 gearbox
  - Remove shaft from gearbox.
  - Remove inner shaft core, clean, grease with any high quality graphite or molly-based grease and re-install.

### ENGINE REDUCTION GEAR

- Reduction gearbox attached to engine should be filled with SAE 80/90 gear oil.
- Check oil level daily—with engine sitting level should be even with the lower plug.

### SPARK PLUG

- Check periodically.
- Standard spark plug gap is 0.024-0.028 in.
- Replace if either electrode is worn or if the insulator is fouled by oil or other deposits.
- Torque is 125-135 in. lb—do not over torque.

### CARBURETOR ADJUSTMENT

- Carburetor is set at the factory. So, normally, further adjustment is unnecessary. If adjustment is required, call Steele's.

### CYLINDER FINS

- Check periodically.
- Clogged fins will result in poor engine cooling.
- Remove dirt and dust from between fins to let cooling air pass easily.

### MAGNETO

- This unit is incorporated with magneto CDI (Capacitor Discharge Ignition) system, which does not require adjustment of ignition or timing or contact breaker point gap. Insure wire connections and couplers are attached securely.

### MUFFLER AND EXHAUST PORT

- Clean as necessary.
- Carbon deposit in cylinder exhaust port and muffler will reduce engine output.
  - Muffler can be removed by taking off muffler cover.
  - Be careful not to scratch cylinder on piston while cleaning cylinder exhaust port.
  - The most probable carbon buildup will be within the spark arrestor screen. Clean with wire brush and replace screen.

## TROUBLESHOOTING

Poor performance of the engine and/or trimming mechanism can normally be prevented by carefully following the above instructions.

Poor performances can easily be corrected, even by a beginner.

When the engine does not function properly, check the following four (4) points first:

1. Check exhaust system for carbon.
2. Is engine compression adequate?
3. Is fuel system in good condition and is enough fuel being supplied?
4. Is electrical system in good condition and is spark plug operating normally?

When there is serious trouble with the unit, do not try to repair it yourself but have your distributor or dealer do it for you.

For detailed **TROUBLE SHOOTING** refer to tables 1 and 2. Locate the problem on the following charts and repair as necessary.

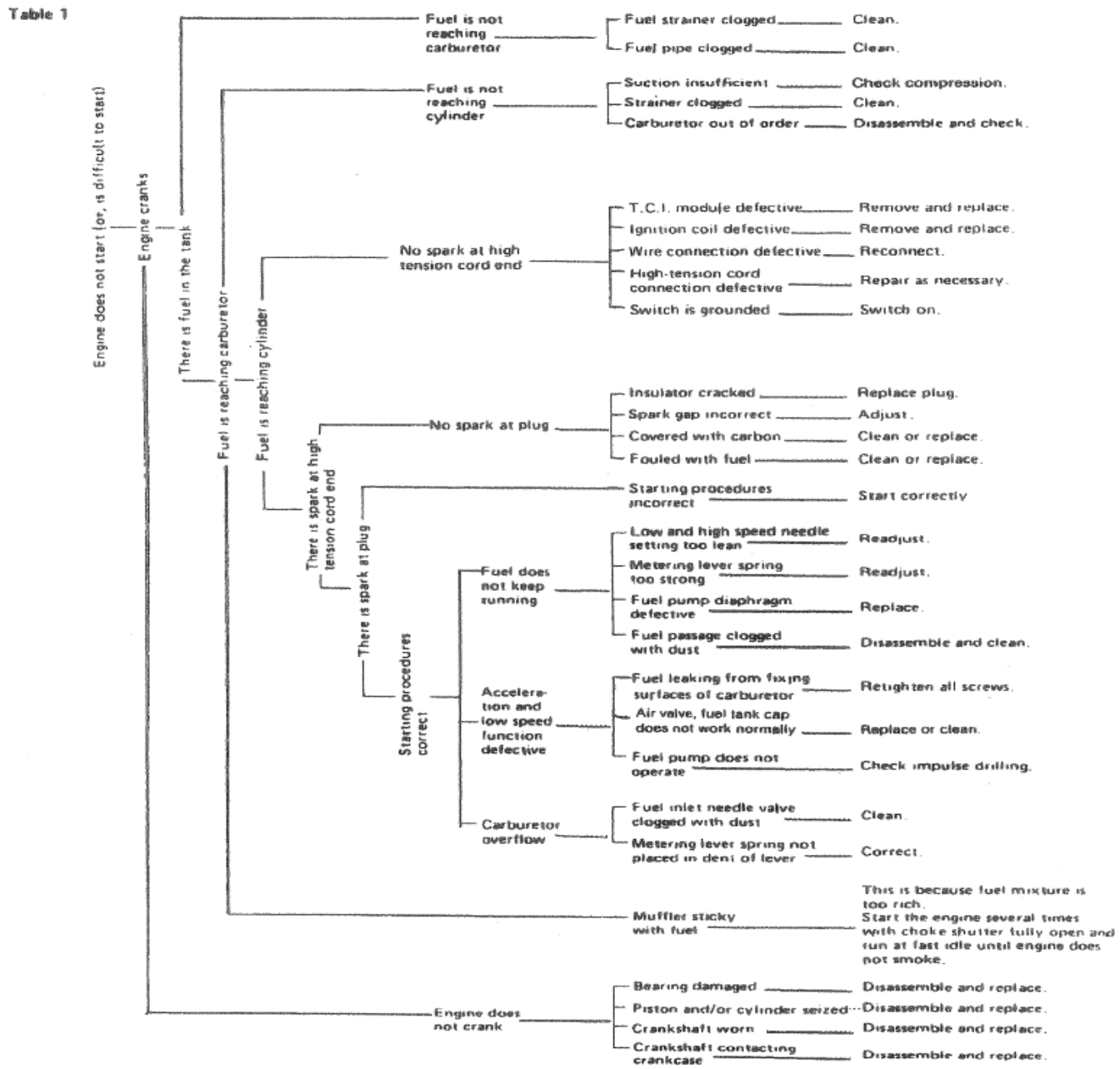

Table 2

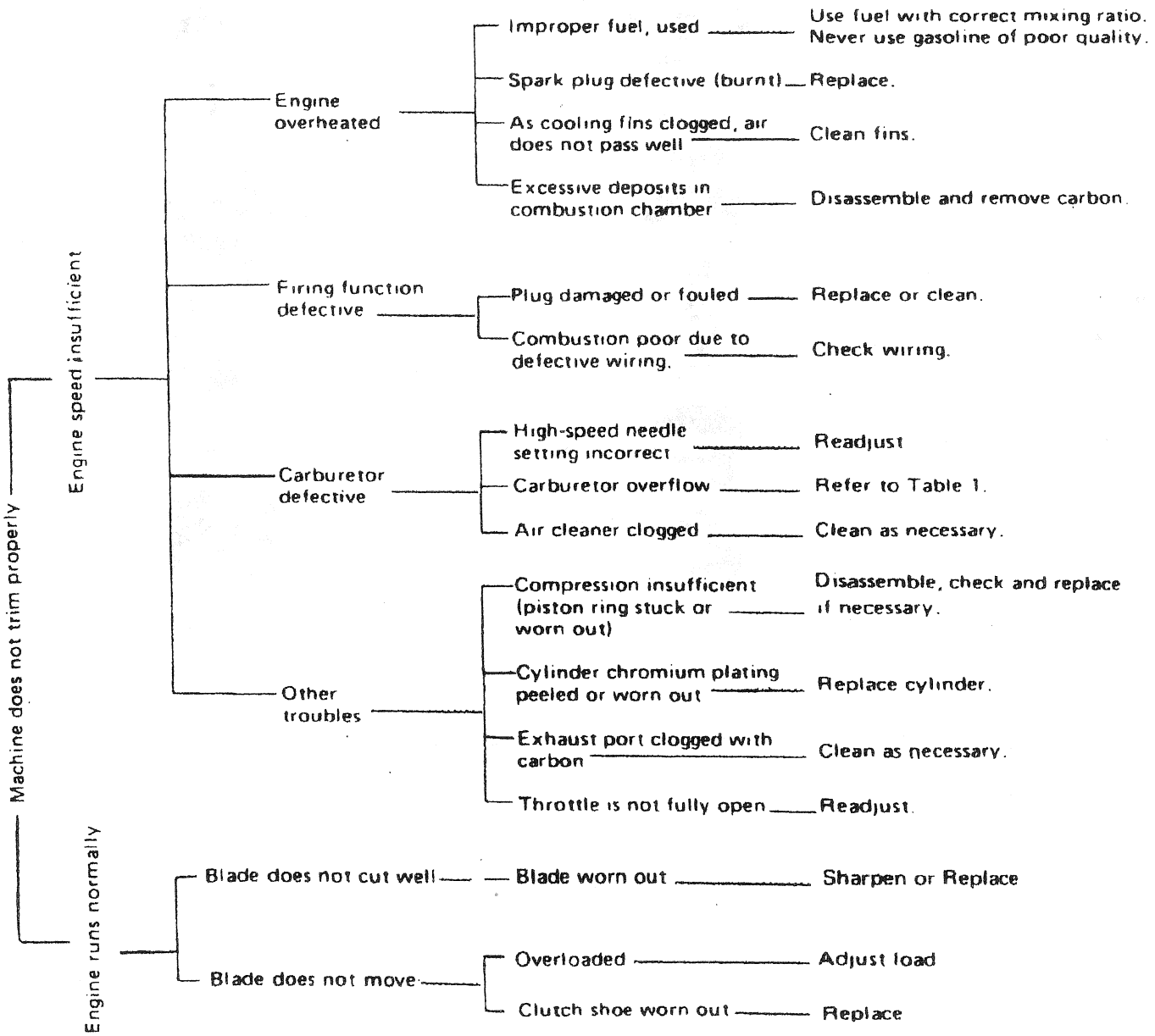
Machine does not trim properly
Engine speed insufficient
Engine overheated
Improper fuel, used
Use fuel with correct mixing ratio. Never use gasoline of poor quality.
Spark plug defective (burnt)
Replace.
As cooling fins clogged, air does not pass well
Clean fins.
Excessive deposits in combustion chamber
Disassemble and remove carbon.
Firing function defective
Plug damaged or fouled
Replace or clean.
Combustion poor due to defective wiring.
Check wiring.
Carburetor defective
High-speed needle setting incorrect
Readjust
Carburetor overflow
Refer to Table 1.
Air cleaner clogged
Clean as necessary.
Other troubles
Compression insufficient (piston ring stuck or worn out)
Disassemble, check and replace if necessary.
Cylinder chromium plating peeled or worn out
Replace cylinder.
Exhaust port clogged with carbon
Clean as necessary.
Throttle is not fully open
Readjust.
Engine runs normally
Blade does not cut well
Blade worn out
Sharpen or Replace
Blade does not move
Overloaded
Adjust load
Clutch shoe worn out
Replace

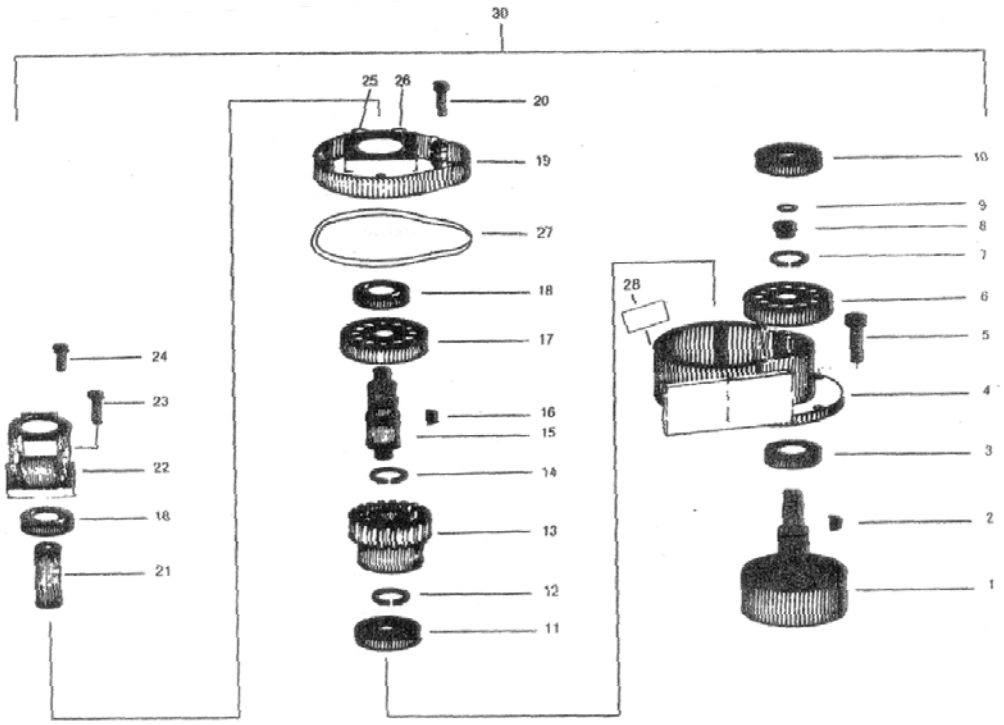


| Key | Part No. | Description | | | Key | Part No. | Description | |
|---|---|---|---|---|---|---|---|---|
| 9-1 | 100-1301 | Clutch Drum | | | 9-16 | 100-1310 | Key, 1/8 x 5/8 | |
| 2 | 100-1302 | Key, 1/16 x 3/8 | | | 17 | 100-1305 | Bearing, 6003 | |
| 3 | 100-1303 | Seal, 7443 | | | 18 | 100-1311 | Seal, 6204 | |
| 4 | 100-1304 | Housing | | | 19 | 100-1312 | Housing Cover | |
| 5 | 500-1101 | Screw, 5x20 | | | 20 | 500-1105 | Screw, 8-32x1 | |
| 6 | 100-1305 | Bearing, 6003 | | | 21 | 100-1313 | Drive Shaft Coupler | |
| 7 | 500-1102 | Circlip, 5/8 | | | 22 | 100-1314 | Drive Shaft Adaptor | |
| 8 | 100-1306 | Drive Gear | | | 23 | 500-1105 | Screw, 8-32x1 | |
| 9 | 500-1103 | Circlip 7/16 | | | 24 | 500-1106 | Screw, 8-32x3/4 | |
| 10 | 100-1307 | Bearing, 6000 | | | 25 | 500-1107 | Plug | |
| 11 | 100-1307 | Bearing, 6000 | | | 26 | 500-1108 | Vent Plug | |
| 12 | 500-1104 | Circlip, 3/4 | | | 27 | 100-1315 | Gasket | |
| 13 | 100-1308 | Driven Gear | | | 28 | LAB-0004 | Label | |
| 14 | 500-1104 | Circlip, 3/4 | | | 29 | 100-1300E | 2:1 Gearbox/Echo | |
| 15 | 100-1309 | Driven Gear Shaft | | | 30 | 100-1300 | 2:1 Gearbox/Shindaiwa | |

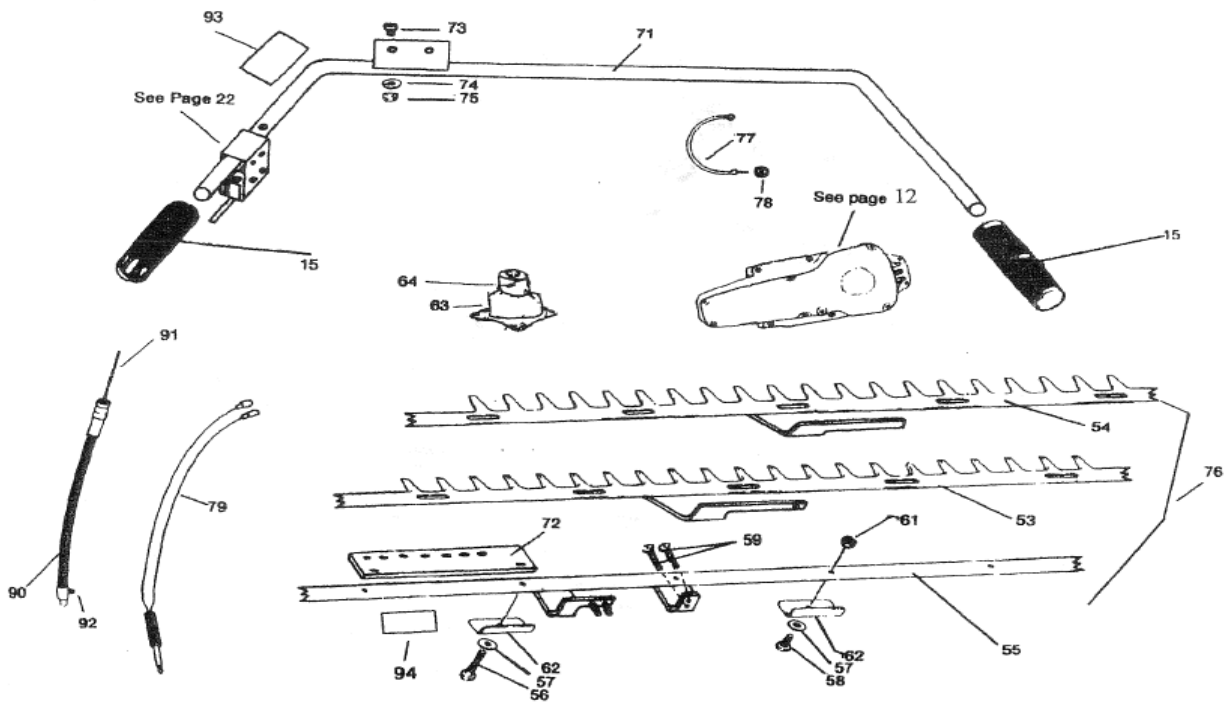


**Figure 10** **BLADESET**

| Key | Part No. | Description | | | Key | Part No. | Description | |
|---|---|---|---|---|---|---|---|---|
| 10-15 | 200-1006 | Handle Grip | | | 10-72 | 500-1033 | Handlebar Plate | |
| 53 | 200-1028 | 72” Inner Blade | | | 73 | 500-1040 | Bolt 1/4x3/4 | |
| 54 | 200-1029 | 72” Outer Blade | | | 74 | 500-1041 | Lockwasher 1/4 | |
| 55 | 200-1030 | 72” Frame Bar | | | 75 | 500-1042 | Nut ¼ | |
| 56 | 500-1037 | Bolt, 1/4x1-1/4 | | | 76 | 200-1045 | 72” bladeset no gearbox | |
| 57 | 500-1036 | Washer | | | | 200-1035 | Handlebar Only | |
| 58 | 500-1038 | Bolt, 1/4x1 | | | 77 | 200-1046 | Carry Rod | |
| 59 | 500-1010 | Screw, 5x20 | | | 78 | 500-1043 | Locknut, 1/4 | |
| 61 | 500-1039 | Locknut, ¼ | | | 79 | 200-1053 | Ignition Wires | |
| 62 | 200-1031 | Plate | | | 92 | 500-1035 | Grease Fitting | |
| 63 | 200-1050 | Gearbox Adaptor | | | 93 | Lab-0005 | Label, caution | |
| 64 | 200-1058 | Locking Pin | | | 94 | Lab-0006 | Label, caution | |
| 71 | 200-1032 | Handlebar Complete | | | 95 | 200-1104-unv | Housing/blade end | |
| 53 | 200-1028-96 | 96” inner Blade | | | 96 | 200-1103-32A | Housing/motor end | |
| 54 | 200-1029-96 | 96” outer Blade | | | - | 200-96 | 96” bladeset/gearbox | |
| 76 | 200-2045 | 96” bladeset no gearbox | | | - | 200-72 | 72” bladeset/gearbox | |
| | | | | | | | | |
| 90 | 200-1101-32A | Shaft Housing 2:1 | | | 90 | 200-1101-32 | Shaft Housing DD | |
| 91 | 200-1102-32A | Shaft Core 2:1 | | | 91 | 200-1102-32 | Shaft Core DD | |

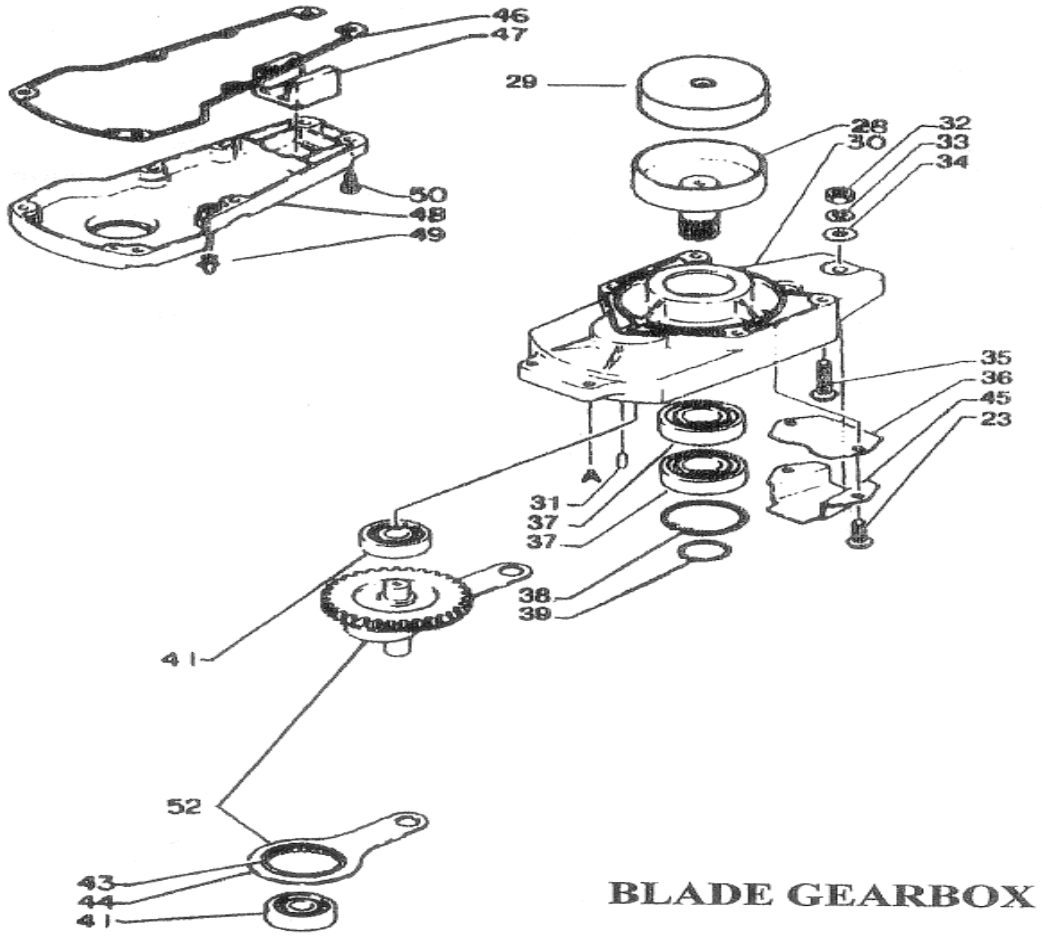


**Figure 11**

| Key | Part No. | Description | | | Key | Part No. | Description | |
|---|---|---|---|---|---|---|---|---|
| 11-** | 200-0001K | Gearbox, Complete | | | 11-38 | 500-1031 | Circlip, 35 | |
| 23 | 500-1026 | Bolt, 5 x 14 | | | 39 | 500-1032 | Circlip, 16 | |
| 28 | 200-1008 | Clutch Drum | | | 41 | 200-1013 | Bearing, 6200 | |
| 29 | 200-1052 | Do-Nut | | | | | | |
| 30 | | Housing | | | 43-44 | 200-1020 | Con-rod w/ bearing | |
| 31 | | Dowel Pin | | | 45 | 200-1014 | Guide | |
| 32 | 500-1027 | Nut, 1/4 | | | 46 | 200-1015 | Gasket | |
| 33 | 500-1028 | Spring Washer, 1/4 | | | 47 | 200-1016 | Felt | |
| 34 | 500-1029 | Washer, 1/4 | | | 48 | 200-1017 | Cover Plate | |
| 35 | 500-1030 | Screw, 5 x 30 | | | 49 | 500-1033 | Grease Fitting | |
| 36 | 200-1101 | Guide Plate | | | 50 | 500-1034 | Screw, 4 x 14 | |
| 37 | 200-1021 | Bearing, 6003 | | | 52 | 200-1018 | Gear Assembly | |

**200-0001K Gearbox Complete** includes Blade Gearbox (200-0001) and Gearbox Adaptor with locking pin (200-1050/200-1058)

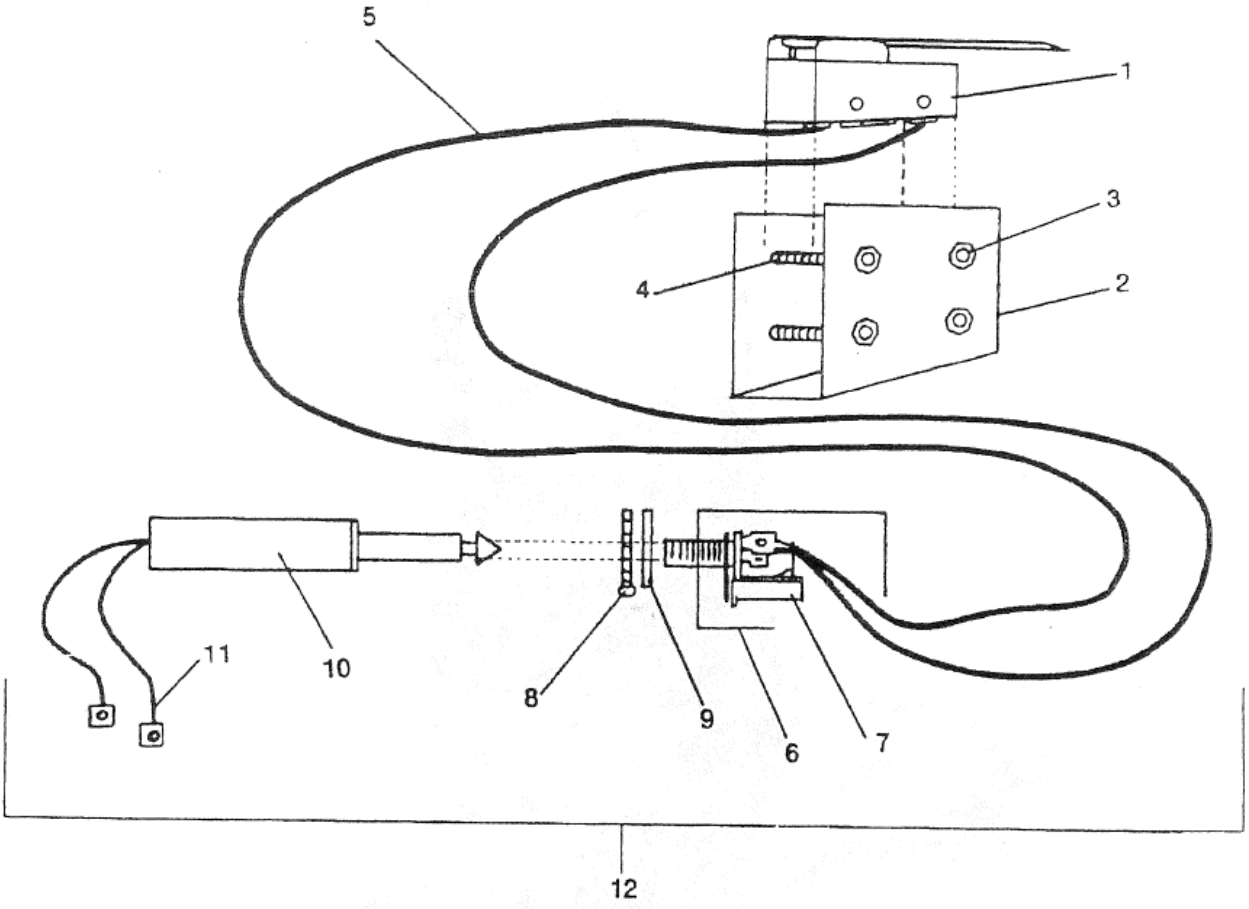


SAFETY SWITCH

**Figure 12**

| Key | Part No. | Description | | | Key | Part No. | Description | |
|---|---|---|---|---|---|---|---|---|
| 12-1 | 200-1101 | Switch | | | 7 | 200-1107 | Receipticle | |
| 2 | 200-1102 | Switch Bracket | | | 8 | 200-1108 | Nut | |
| 3 | 200-1103 | Nut, 6-32 | | | 9 | 200-1109 | Washer | |
| 4 | 200-1104 | Bolt, 6-32x1 | | | 10 | 200-1110 | Plug | |
| 5 | 200-1105 | Switch Wires | | | 11 | 200-1111 | Plug Wires | |
| 6 | 200-1106 | Recepticle Bracket | | | 12 | 200-1112 | Safety Switch Comp. | |

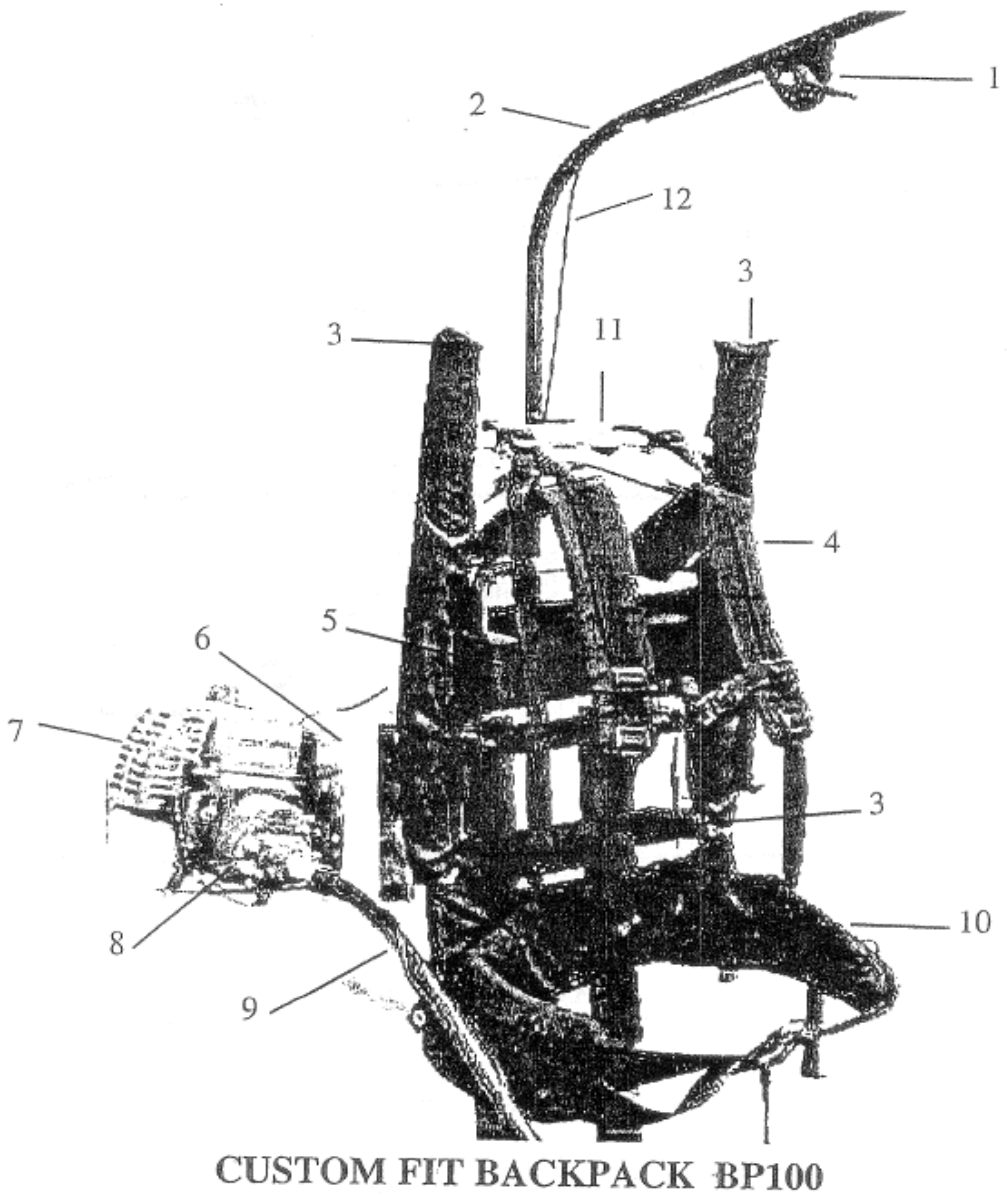


**Figure 13**

| Key | Part No. | Description | | | Key | Part No. | Description | |
|---|---|---|---|---|---|---|---|---|
| 1 | 200-1055 | Throttle Lever | | | 8 | 100-1300 | Motor Gearbox only | |
| 2 | BP100A | Gooseneck | | | 9 | | Shaft housing | See page 11 |
| 3 | BP111 | Frame pads, 3 piece set | | | 10 | BP114 | Waistbelt for BP100 | |
| 4 | BP112 | Shoulder straps | | | 11 | BP110 | Frame only | |
| 5 | BP113 | Back Pad | | | 12 | 200-1054 | Throttle Wire | |
| 6 | BP116 | Motor Spacer | | | Not shown | S1055 | Carry Strap | |
| 7 | T260 | Motor, Shindaiwa | | | Not shown | BP1014 | Eyebolt for top end of Gooseneck | |
| Not shown | BP115 | Back Support (holds pad BP113, key #5) | | | Not shown | BP1011 | Ring for eyebolt (BP1014) | |

## SAJE™ TREE SHEARING MACHINE LIMITED WARRANTY

Steele's SAJE, referred to hereafter as Steele's, warrants to the original purchaser at retail that each new Shearing Machine shall be free from defects in material and workmanship for a period of one year from the date of the original purchase. Additionally, Steele's warrants to the original purchaser that the engine and blade reduction gear shall be free from defects in material and workmanship for a period of one year from the date of the original purchase.

In the event of a defect in a Shearing Machine, Steele's will repair and/or replace the defective part or parts free of charge. In the event of malfunction or failure of a Shearing Machine, simply contact Steele's at 985-848-5133. Freight must be prepaid. Steele's reserves the right to inspect the claimed defective part or parts to determine if it is covered by this warranty. Upon confirmation that the malfunction or failure is the result of a defect covered by this warranty, Steele's shall within 30 days after receipt of the Shearing Machine, at its option, repair and or replace the defective part free of charge.

Steele's assumes no responsibility for any damage, defects, or costs resulting from repairs and/or modifications of a Shearing Machine by any person who is not an authorized SAJE servicing dealer or distributor.

This warranty shall only cover defects arising under normal usage. Steele's assumes no responsibility whatsoever if the SAJE SHEAR shall fail during the warranty period by reasons of:

1. Misuse, negligence, physical damage or accident.
2. Lack of maintenance as prescribed in the Operator's manual.
3. Improper adjustments of ignition timing and carburetor.
4. The use of fuels and lubricating oils not approved by Steele's.
5. The use of parts or accessories not approved by Steele's.
6. Operation of the unit with the air filter removed.
7. Operation at engine speeds in excess of Steele's recommendations.
8. Repair by any unauthorized party during the warranty period.
9. Normal wear and tear.
10. Operation of the unit with an incorrect fuel/air ratio.
11. Operation of the unit with any cutting device not approved by Steele's for use with this model.
12. Any modifications made by persons other than an authorized SAJE servicing dealer (distributor).

FOR ADDITIONAL INFORMATION REGARDING THIS WARRANTY, OR SERVICE OF SAJE™ PRODUCTS, YOU MAY CONTACT:

Steele's SAJE, LLC
Kevin Steele
Office: (985) 848-5133
Cell: (985) 966-1041
Fax: (985) 848-0447

## WAISTBELT POSITION

**Follow these steps IN SEQUENCE to achieve the best fit every time you use your pack. Refer to the figure on page 2 to identify pack parts.**

**Before starting, loosen all load-lifter and belt stabilizer straps.**

1. **FIRST weight the pack with at least 25 lb. (35 lb. is ideal).**
2. **NEXT put the pack on and tighten the waistbelt. Make sure you place the waistbelt in the proper location (see Figures 3 & 4).**

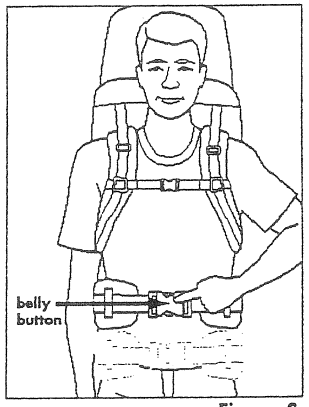


Figure 3

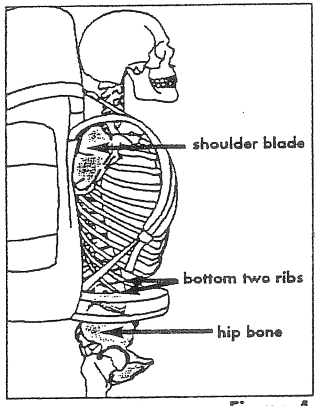


Figure 4

It is recommended to wear the belt on hip bones, just under the rib cage. If you still prefer to wear the belt low, add one to two inches to your torso length measurement. Figure 3 shows both the preferred placement of the waistbelt and an example of a belt worn low. The low position is not recommended. Once positioned correctly, tighten the belt to prevent it from sliding.
(A good rule of thumb is to have the belt buckle approximately over your belly button.)

**Benefits of wearing the belt high on the waist:**

A. Proper loading of the skeletal frame, further supported by the two strongest muscle groups in the body: the quadriceps & gluteals.

B. Blood flow & nerves route across the front of the hips; wearing the belt too low can restrict blood flow causing muscle fatigue, nerve pinching and possible numbness.







## SHOULDER STRAP POSITION

3. **Once the waistbelt is in the correct position, tighten the shoulder straps**. To tighten shoulder straps pull the webbing at the lower ends of the shoulder strap down & back. The top of the load lifter strap should be 3-4" inches above the top of your shoulder **(see Figure 5)**. (Put a little more load on your shoulders than you want to end up with.) During this operation the load-lifter straps should be kept loose.

**With the waistbelt positioned correctly and the shoulder straps as shown below, you have achieved a perfect fit.**

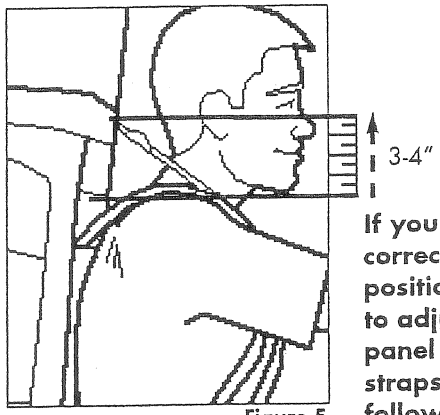


Figure 5

**If you do not have the correct shoulder strap position, you will need to adjust the suspension panel and the shoulder straps as directed in the following section.**

## SHOULDER STRAP ADJUSTMENT

**If the shoulder straps are pinching your neck or shoulders or feel too wide, you need to adjust the clevis pin that attaches to straps to the frame.**

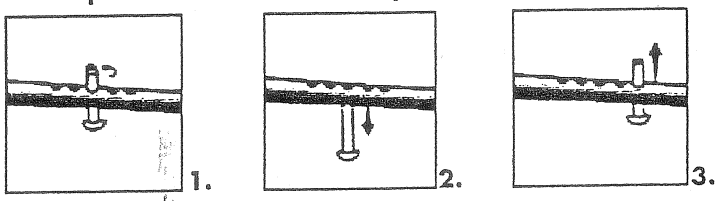


1. Remove split ring from clevis pin.
2. Slide clevis pin out of frame.
3. Insert clevis pin into desired hole and replace split ring. Repeat for opposit side.