GROMMET SEAL - Triple Series

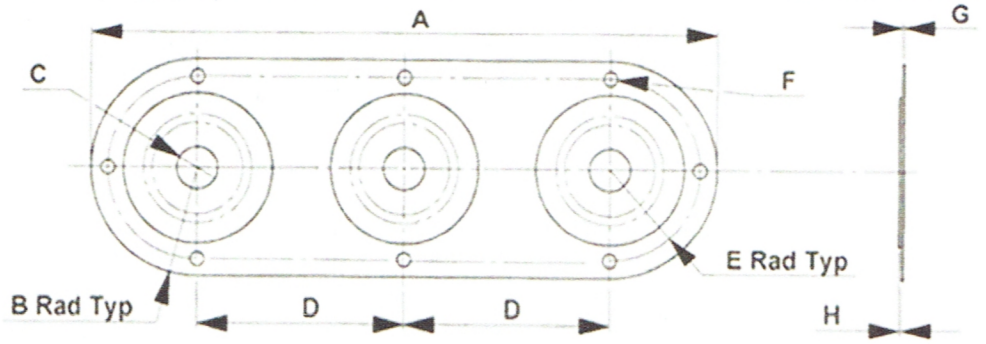

Triple Series								
Part#	A	B	C	D	E	F	G	H
GS1003-3HBL	8.500	1.500	no holes	n/a	1.310	.125	.040	.120
GS1004-3H4	8.500	1.500	.250	2.750	1.310	.125	.040	.120
GS1003-3H6	8.500	1.500	.375	2.750	1.310	.125	.040	.120
GS1003-3H8	8.500	1.500	.500	2.750	1.310	.125	.040	.120
GS1003-3H10	8.500	1.500	.625	2.750	1.310	.125	.040	.120
GS1003-3H12	8.500	1.500	.750	2.750	1.310	.125	.040	.120
GS1003-3H16	8.500	1.500	.950	2.750	1.310	.125	.040	.120