9'-0" CEILINGS
SHIPLOOSE OVERHANG BLOCK & EXTENSIONS
USE LOW PROFILE TIRES

ICE SHIELD ON EAVES (2 ROWS)

9'-0" CEILINGS
SHIPLOOSE OVERHANG BLOCK & EXTENSIONS
USE LOW PROFILE TIRES

PORCH OVERHANG SUPPLIED BY MANUFACTURER. PORCH SLAB, POSTS AND RAILINGS FOR PORCH TO BE SUPPLIED AND INSTALLED ON-SITE BY BUILDER.

ATTIC VENTILATION
LOWER 50% @ EAVES
REQ'D 3.63 SUPPLIED 3.35
UPPER 50% 3'-0" MIN ABOVE EAVES
REQ'D 3.63 SUPPLIED 4.32 (6 PCS)

CHADK 7/8/2022 9:43:35 AM

ACTUAL HOUSE MAY VARY FROM ELEVATION-ACCESS TO GRADE ON-SITE BY OTHERS

THIS PRINT HAS BEEN EXTRACTED FROM A SET OF A PREVIOUSLY APPROVED SYSTEM OR A MODEL APPROVAL AND IS ON FILE WITH STATE AND IS OK TO BE BUILT

X Scott Witmer

BUILDER	CUSTOMER
REAL ESTATE by K LLC	LOT 3 - MODE

CITY	COUNTY	STATE
FREDERICKSBURG	SPOTSYLVANIA	VA

WIND SPEED	SNOW LOAD	SQ. FT.
115 MPH VULT	25	2179

ORDER NO.	SERIAL NO.	FILE NO.
102709	17640	P102709(660)

4154-CBS CAPE
FRONT ELEVATION

Virginia Homes Building Systems
MBSP MODULAR BUILDING SYSTEMS OF PA
Virginia Homes Building Systems
200 Custom Ave.
Middleburg, PA 17842
(888) 553-1414
www.virginiahomesbuildingsystems.com

DATE:	DRAWN BY:	STATUS:
10/12/21	CAP	CONFO
11/10/2021	CLP	REV CONFO
03/11/2022	BLF	FINAL
3/25/22	CAP	PA
4/8/22	CAP	PURCHASING
4/12/2022	COB	APPROVAL
6/22/22	CDK	PRODUCTION

PAGE: 2.1

ICE SHIELD ON EAVES (2 ROWS)

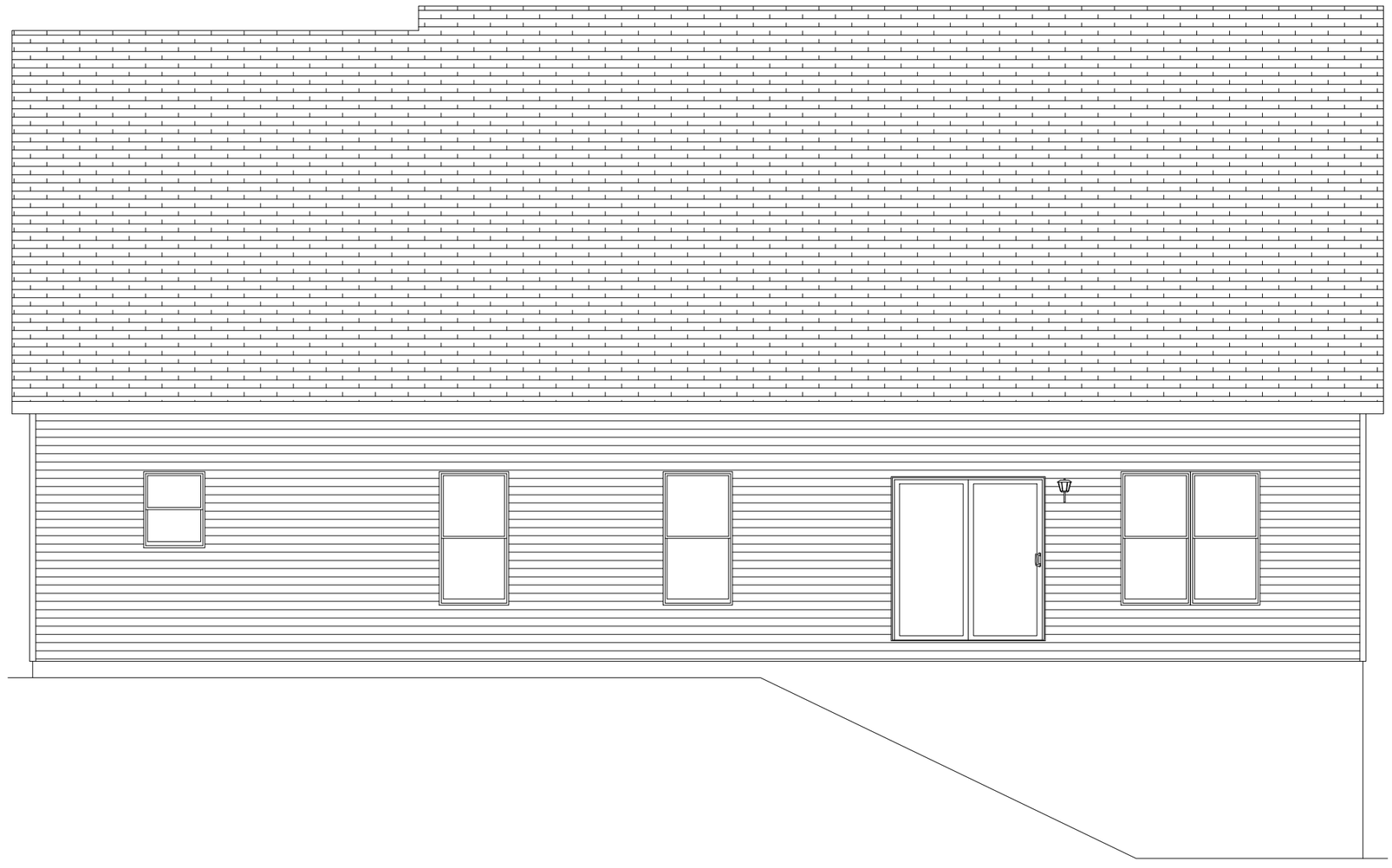

CHADK 7/8/2022 9:43:35 AM

ACTUAL HOUSE MAY VARY FROM ELEVATION–ACCESS TO GRADE ON–SITE BY OTHERS

THIS PRINT HAS BEEN EXTRACTED FROM A SET OF A PREVIOUSLY APPROVED SYSTEM OR A MODEL APPROVAL AND IS ON FILE WITH STATE AND IS OK TO BE BUILT

X Scott Witmer

BUILDER	REAL ESTATE by K LLC
CUSTOMER	LOT 3 – MODE
CITY	FREDERICKSBURG
COUNTY	SPOTSYLVANIA
STATE	VA
WIND SPEED	115 MPH VULT
SNOW LOAD	25
SQ. FT.	2179
ORDER NO.	102709
SERIAL NO.	17640
FILE NO.	P102709(660)

4154–CBS CAPE
REAR ELEVATION

Virginia Homes Building Systems

Virginia Homes Building Systems
200 Custom Ave.
Middleburg, PA 17842
(888) 553–1414
www.virginiahomesbuildingsystems.com

MBSP MODULAR BUILDING SYSTEMS OF PA

DATE:	DRAWN BY:	STATUS:
10/12/21	CAP	CONFO
11/10/2021	CLP	REV CONFO
03/11/2022	BLF	FINAL
3/25/22	CAP	PA
4/8/22	CAP	PURCHASING
4/12/2022	COB	APPROVAL
6/22/22	CDK	PRODUCTION

PAGE: 2.2

ICE SHIELD ON EAVES (2 ROWS)

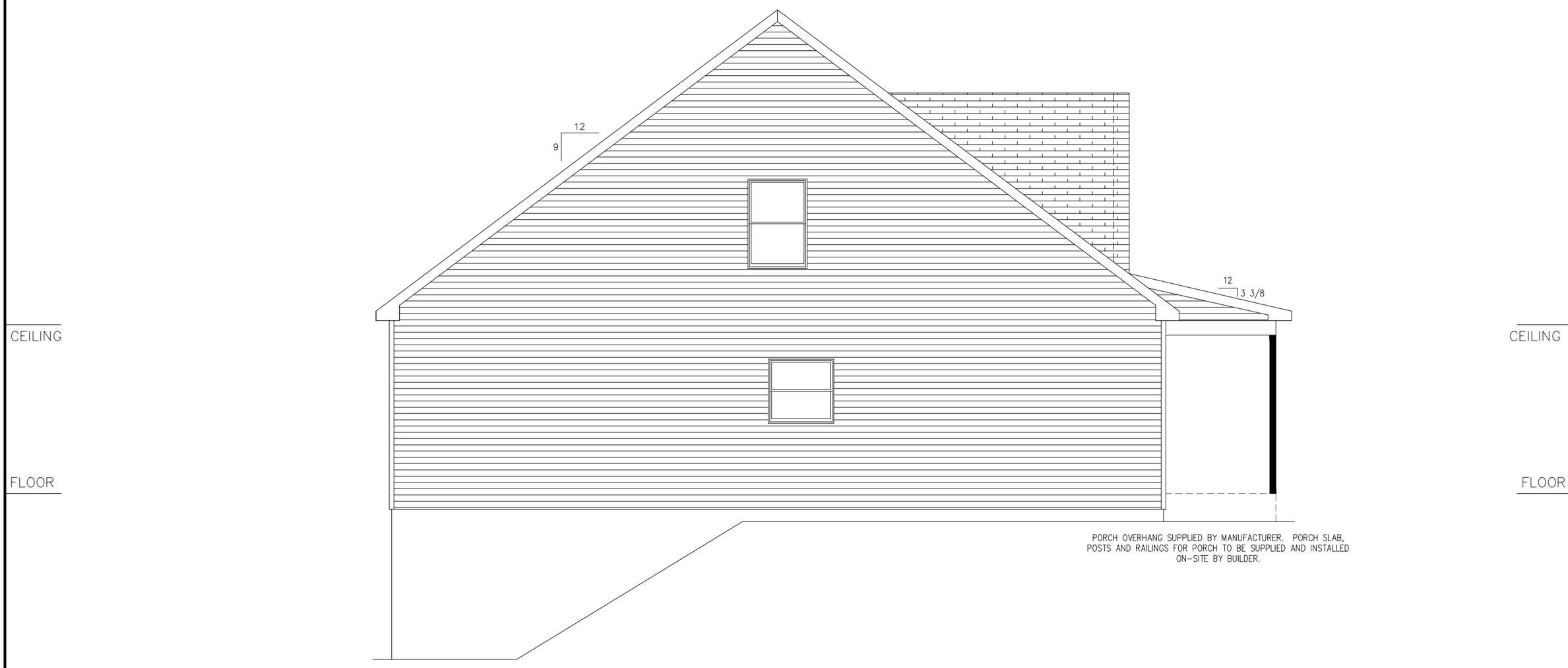

PORCH OVERHANG SUPPLIED BY MANUFACTURER. PORCH SLAB, POSTS AND RAILINGS FOR PORCH TO BE SUPPLIED AND INSTALLED ON-SITE BY BUILDER.

CHADK 7/8/2022 9:43:35 AM

ACTUAL HOUSE MAY VARY FROM ELEVATION-ACCESS TO GRADE ON-SITE BY OTHERS

THIS PRINT HAS BEEN EXTRACTED FROM A SET OF A PREVIOUSLY APPROVED SYSTEM OR A MODEL APPROVAL AND IS ON FILE WITH STATE AND IS OK TO BE BUILT

X Scott Witmer

BUILDER	REAL ESTATE by K LLC
CUSTOMER	LOT 3 - MODE
CITY	FREDERICKSBURG
COUNTY	SPOTSYLVANIA
STATE	VA
WIND SPEED	115 MPH VULT
SNOW LOAD	25
SQ. FT.	2179
ORDER NO.	102709
SERIAL NO.	17640
FILE NO.	P102709(660)

4154-CBS CAPE
LEFT ELEVATION

Virginia Homes Building Systems
Virginia Homes Building Systems
200 Custom Ave.
Middleburg, PA 17842
(888) 553-1414
www.virginiahomesbuildingsystems.com

DATE:	DRAWN BY:	STATUS:
10/12/21	CAP	CONFO
11/10/2021	CLP	REV CONFO
03/11/2022	BLF	FINAL
3/25/22	CAP	PA
4/8/22	CAP	PURCHASING
4/12/2022	COB	APPROVAL
6/22/22	CDK	PRODUCTION

PAGE: 2.3

ICE SHIELD ON EAVES (2 ROWS)

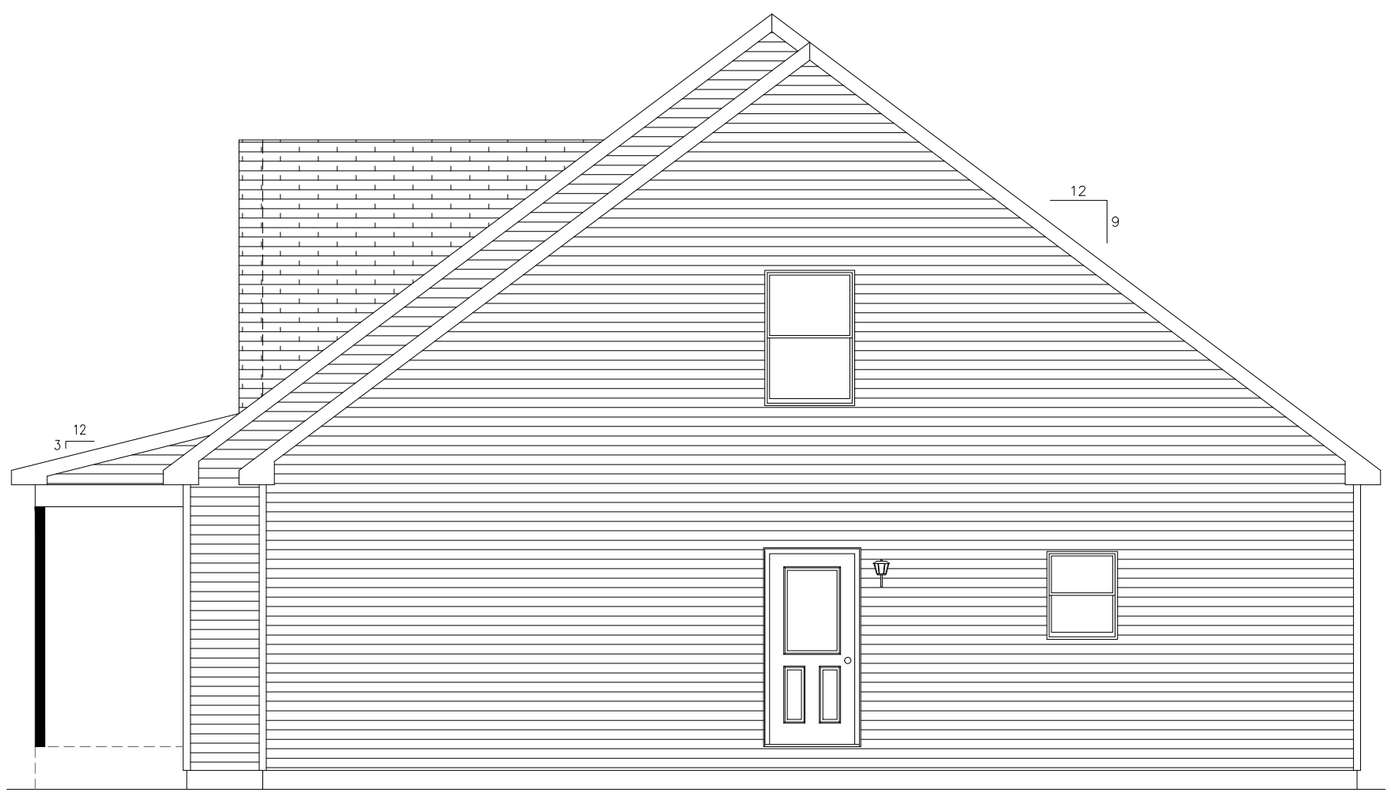

PORCH OVERHANG SUPPLIED BY MANUFACTURER. PORCH SLAB, POSTS AND RAILINGS FOR PORCH TO BE SUPPLIED AND INSTALLED ON-SITE BY BUILDER.

CHADK 7/8/2022 9:43:35 AM

ACTUAL HOUSE MAY VARY FROM ELEVATION-ACCESS TO GRADE ON-SITE BY OTHERS

THIS PRINT HAS BEEN EXTRACTED FROM A SET OF A PREVIOUSLY APPROVED SYSTEM OR A MODEL APPROVAL AND IS ON FILE WITH STATE AND IS OK TO BE BUILT

X Scott Witmer

BUILDER	REAL ESTATE by K LLC	CUSTOMER	LOT 3 - MODE
CITY	FREDERICKSBURG	COUNTY	SPOTSYLVANIA
STATE	VA		
WIND SPEED	115 MPH VULT	SNOW LOAD	25
SQ. FT.	2179		
ORDER NO.	102709	SERIAL NO.	17640
FILE NO.	P102709(660)		

4154-CBS CAPE
RIGHT ELEVATION

MBSP MODULAR BUILDING SYSTEMS OF PA

Virginia Homes Building Systems

Virginia Homes Building Systems
200 Custom Ave.
Middleburg, PA 17842
(888) 553-1414
www.virginiahomesbuildingsystems.com

DATE:	DRAWN BY:	STATUS:
10/12/21	CAP	CONFO
11/10/2021	CLP	REV CONFO
03/11/2022	BLF	FINAL
3/25/22	CAP	PA
4/8/22	CAP	PURCHASING
4/12/2022	COB	APPROVAL
6/22/22	CDK	PRODUCTION

ALL SINKS IN CABINETS ARE TO BE VENTED WITH AIR ADMITTANCE VALVES UNLESS OTHERWISE NOTED

CODES:
2018 INTERNATIONAL RESIDENTIAL CODE W/ VA AMENDMENTS
(INCLUDING PLUMBING, ELECTRICAL, AND MECHANICAL)
2018 INTERNATIONAL ENERGY CONSERVATION CODE W/ AMENDMENTS
2017 NATIONAL ELECTRICAL CODE W/ VA AMENDMENTS

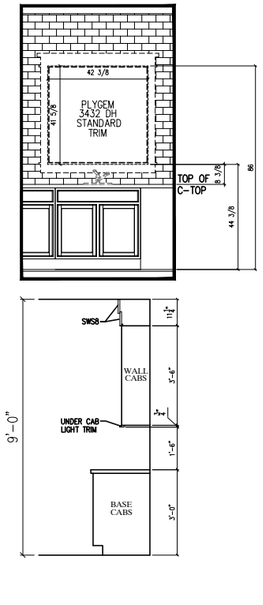

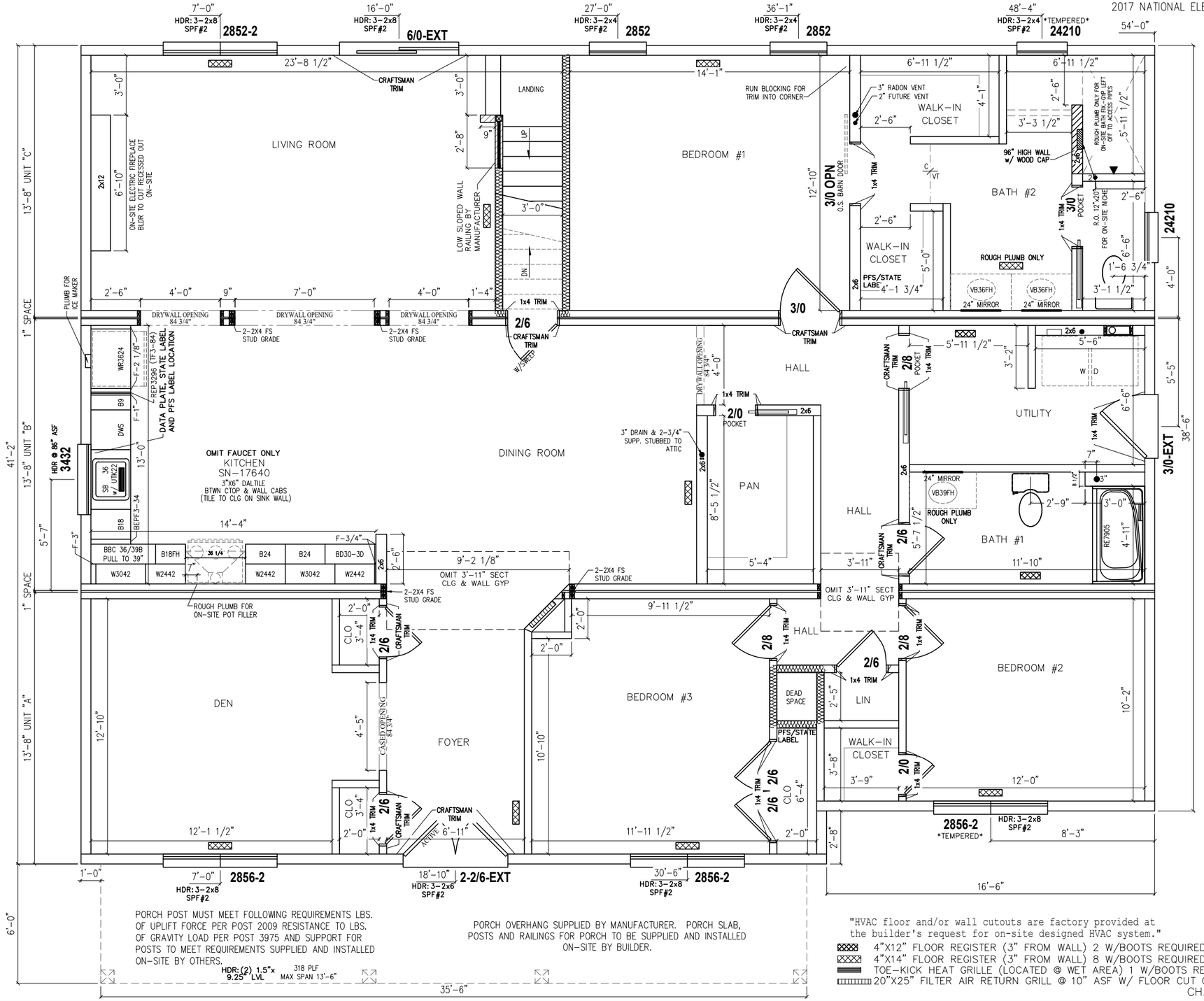

FIRE EXTINGUISHER ON-SITE BY OTHERS

NOTE: STRUCTURE DEPICTED AT THIS SITE ADDRESS TO BE DEMOLISHED BY BUILDER AND REPLACED WITH THIS HOUSE

LOT LINE SET BACK FIRE-RATING/SEPARATION NOT REQUIRED UNLESS SPECIFIED OTHERWISE

BUILDER RESPONSIBLE FOR COMPLIANCE WITH 15 VA USBC R312.2.1 (WINDOW SILLS) (TO BE DONE ON-SITE IF APPLICABLE)

HEAT REQUIREMENT AND SYSTEM IS TO BE DESIGNED AND INSTALLED ON-SITE BY OTHERS. HEAT SYSTEM TO BE INSPECTED AND APPROVED BY LOCAL BUILDING INSPECTOR

-MECHANICAL VENTILATION ON-SITE BY BUILDER PER TABLE M1505.4.
-LIGHTING TO BE PROVIDED ON SITE PER N1104.1.
-VISUAL INSPECTION OF THE INSULATION INSTALLATION IS TO BE DOCUMENTED BY THE QC DEPARTMENT.
-DRYER VENT PER M1502.3

DUCT TIGHTNESS AND BLOWER DOOR TESTING ON-SITE BY BUILDER AND CERTIFIED BY STATE

R303.10 INSECT SCREENS.
EVERY DOOR, WINDOW AND OTHER OUTSIDE OPENING REQUIRED FOR VENTILATION PURPOSES SHALL BE SUPPLIED WITH APPROVED TIGHTLY FITTED SCREENS OF NOT LESS THAN 16 MESH PER INCH (16 MESH PER 25 MM) AND EVERY SCREEN DOOR USED FOR INSECT CONTROL SHALL HAVE A SELF-CLOSING DEVICE. ANY SCREEN DOOR REQUIRED ON EXTERIOR SWING DOORS SHALL BE SUPPLIED AND INSTALLED ON-SITE BY THE BUILDER.

TENT INSULATION AROUND H20 SUPPLY LINES ON EXTERIOR WALLS TO PREVENT FREEZING

"HVAC floor and/or wall cutouts are factory provided at the builder's request for on-site designed HVAC system."

- 4"X12" FLOOR REGISTER (3" FROM WALL) 2 W/BOOTS REQUIRED
- 4"X14" FLOOR REGISTER (3" FROM WALL) 8 W/BOOTS REQUIRED
- TOE-KICK HEAT GRILLE (LOCATED @ WET AREA) 1 W/BOOTS REQUIRED
- 20"X25" FILTER AIR RETURN GRILL @ 10" ASF W/ FLOOR CUT OUT. 1 REQUIRED

CHADK 7/8/2022 9:43:35 AM

SIDING 28 1/2 S.Q.
SHINGLES 38 S.Q.
HIP & RIDGE 3 PKS.
TRUSS B-
RAFTERS BY PBS-
RIDGE VENT-18

NOTES:
1. ✱- DENOTES ADDITIONAL COLUMN IN BASEMENT
2. 2X6 EXTERIOR WALLS 16" O.C.
3. 2X4 MARRIAGE WALLS 16" O.C.
4. ROOF RAFTERS 16" O.C.
5. 9'-0" CLG.
6. STAIRS TO BE 8 1/4" RISERS AND 9" TREADS.
7. MW CLG BEAM OVER KITCHEN/LIVING: 1-1.5" x 9.25" LVL (PER SIDE)
8. MW CLG BEAM OVER FOYER/DINING: 2-1.5" x 9.25" LVL (PER SIDE)
9.
10.
11.
12.*CHILD SAFETY LATCHES REQUIRED ON XX52 & XX56 WINDOWS*

THIS PRINT HAS BEEN EXTRACTED FROM A SET OF A PREVIOUSLY APPROVED SYSTEM OR A MODEL APPROVAL AND IS ON FILE WITH STATE AND IS OK TO BE BUILT

X Scott Witmer

BUILDER	REAL ESTATE by K LLC	CUSTOMER	LOT 3 - MODE
CITY	FREDERICKSBURG	COUNTY	SPOTSYLVANIA
WIND SPEED	115 MPH VULT	SNOW LOAD	25
ORDER NO.	102709	SERIAL NO.	17640
STATE	VA	SQ. FT.	2179
FILE NO.	P102709(660)		

4154-CBS CAPE
1st STORY FLOOR PLAN

MBSP MODULAR BUILDING SYSTEMS OF PA
Virginia Homes Building Systems
Virginia Homes Building Systems
200 Custom Ave.
Middleburg, PA 17842
(888) 553-1414
www.virginiahomesbuildingsystems.com

DATE:	DRAWN BY:	STATUS:
10/12/21	CAP	CONFO
11/10/2021	CLP	REV CONFO
03/11/2022	BLF	FINAL
3/25/22	CAP	PA
4/8/22	CAP	PURCHASING
4/12/2022	COB	APPROVAL
6/22/22	CDK	PRODUCTION

PAGE: 3.1

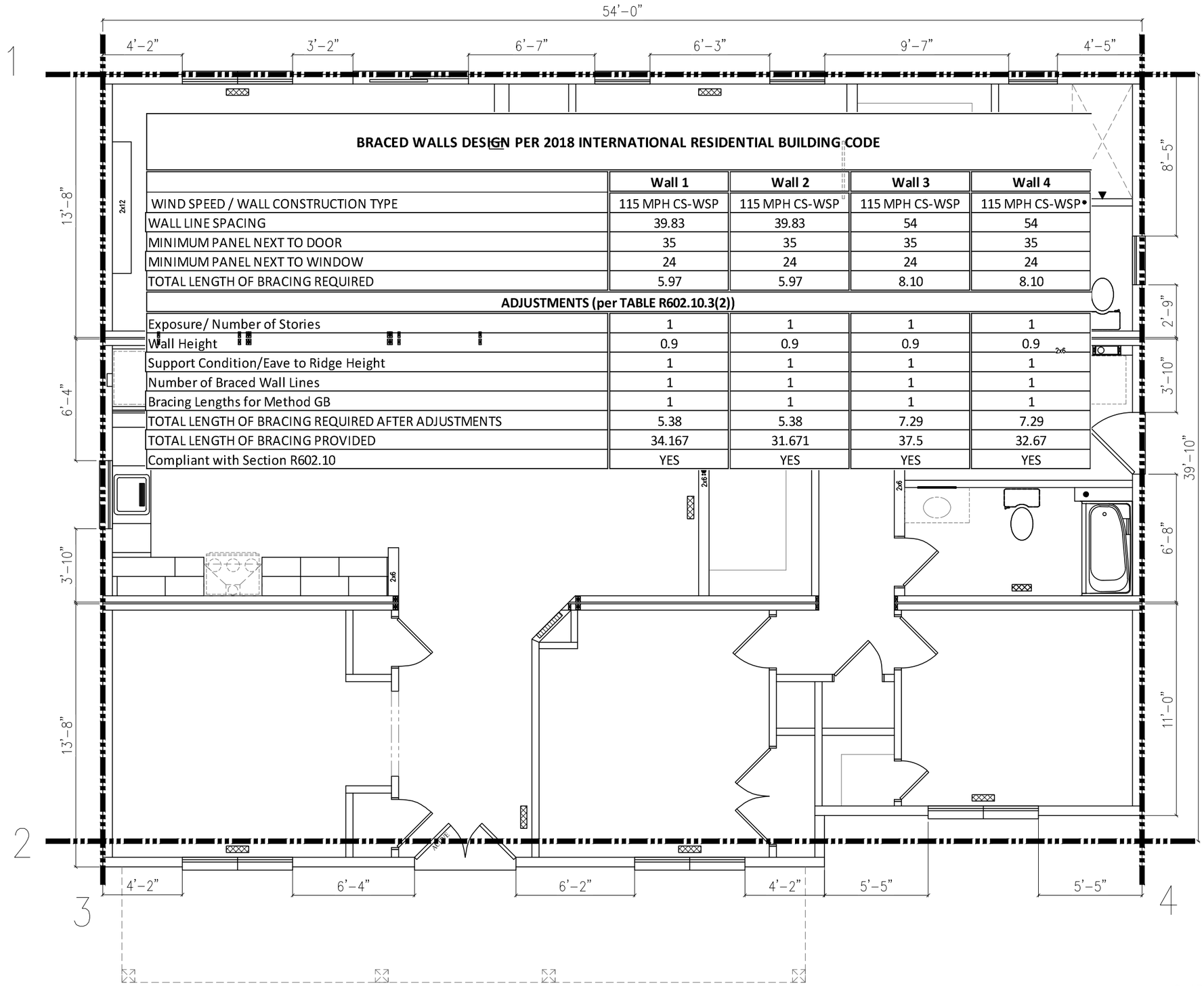

BRACED WALLS DESIGN PER 2018 INTERNATIONAL RESIDENTIAL BUILDING CODE

	Wall 1	Wall 2	Wall 3	Wall 4
WIND SPEED / WALL CONSTRUCTION TYPE	115 MPH CS-WSP	115 MPH CS-WSP	115 MPH CS-WSP	115 MPH CS-WSP•
WALL LINE SPACING	39.83	39.83	54	54
MINIMUM PANEL NEXT TO DOOR	35	35	35	35
MINIMUM PANEL NEXT TO WINDOW	24	24	24	24
TOTAL LENGTH OF BRACING REQUIRED	5.97	5.97	8.10	8.10
ADJUSTMENTS (per TABLE R602.10.3(2))				
Exposure/ Number of Stories	1	1	1	1
Wall Height	0.9	0.9	0.9	0.9
Support Condition/Eave to Ridge Height	1	1	1	1
Number of Braced Wall Lines	1	1	1	1
Bracing Lengths for Method GB	1	1	1	1
TOTAL LENGTH OF BRACING REQUIRED AFTER ADJUSTMENTS	5.38	5.38	7.29	7.29
TOTAL LENGTH OF BRACING PROVIDED	34.167	31.671	37.5	32.67
Compliant with Section R602.10	YES	YES	YES	YES

NAILING FOR ALL BRACED WALL "CS-WSP" PANEL LOCATIONS: 6" O.C. AT PANEL EDGES AND ALL HORIZONTAL JOINTS ARE BLOCKED, INCLUDING TOP AND (INCLUDING TOP AND BOTTOM PLATES) 12" O.C. FIELD. USE 8D COMMON (2.5"X0.131") NAILS (1-3/4" PENETRATION)6D COMMON (2"X0.113") NAILS AT 6" O.C. SPACING (PANEL EDGES) AND AT 12" O.C. SPACING (INTERMEDIATE SUPPORTS) OR 16GA. X 1-3/4" STAPLES AT 3" O.C. SPACING (PANEL EDGES) AND 6" O.C.SPACING (INTERMEDIATE SUPPORTS).

ALL SHEATHING SHALL RUN VERTICALLY WITHOUT HORIZONTAL JOINTS

CHADK 7/8/2022 9:43:35 AM

THIS PRINT HAS BEEN EXTRACTED FROM A SET OF A PREVIOUSLY APPROVED SYSTEM OR A MODEL APPROVAL AND IS ON FILE WITH STATE AND IS OK TO BE BUILT

X Scott Witmer

BUILDER: REAL ESTATE by K LLC
CUSTOMER: LOT 3 – MODE
CITY: FREDERICKSBURG
COUNTY: SPOTSYLVANIA
STATE: VA
WIND SPEED: 115 MPH VULT
SNOW LOAD: 25
SQ. FT.: 2179
ORDER NO.: 102709
SERIAL NO.: 17640
FILE NO.: P102709(660)

4154–CBS CAPE
1st STORY BRACED WALL PLAN

MBSP MODULAR BUILDING SYSTEMS OF PA

Virginia Homes Building Systems
Virginia Homes Building Systems
200 Custom Ave.
Middleburg, PA 17842
(888) 553-1414
www.virginiahomesbuildingsystems.com

DATE:	DRAWN BY:	STATUS:
10/12/21	CAP	CONFO
11/10/2021	CLP	REV CONFO
03/11/2022	BLF	FINAL
3/25/22	CAP	PA
4/8/22	CAP	PURCHASING
4/12/2022	COB	APPROVAL
6/22/22	CDK	PRODUCTION

PAGE: 3.3

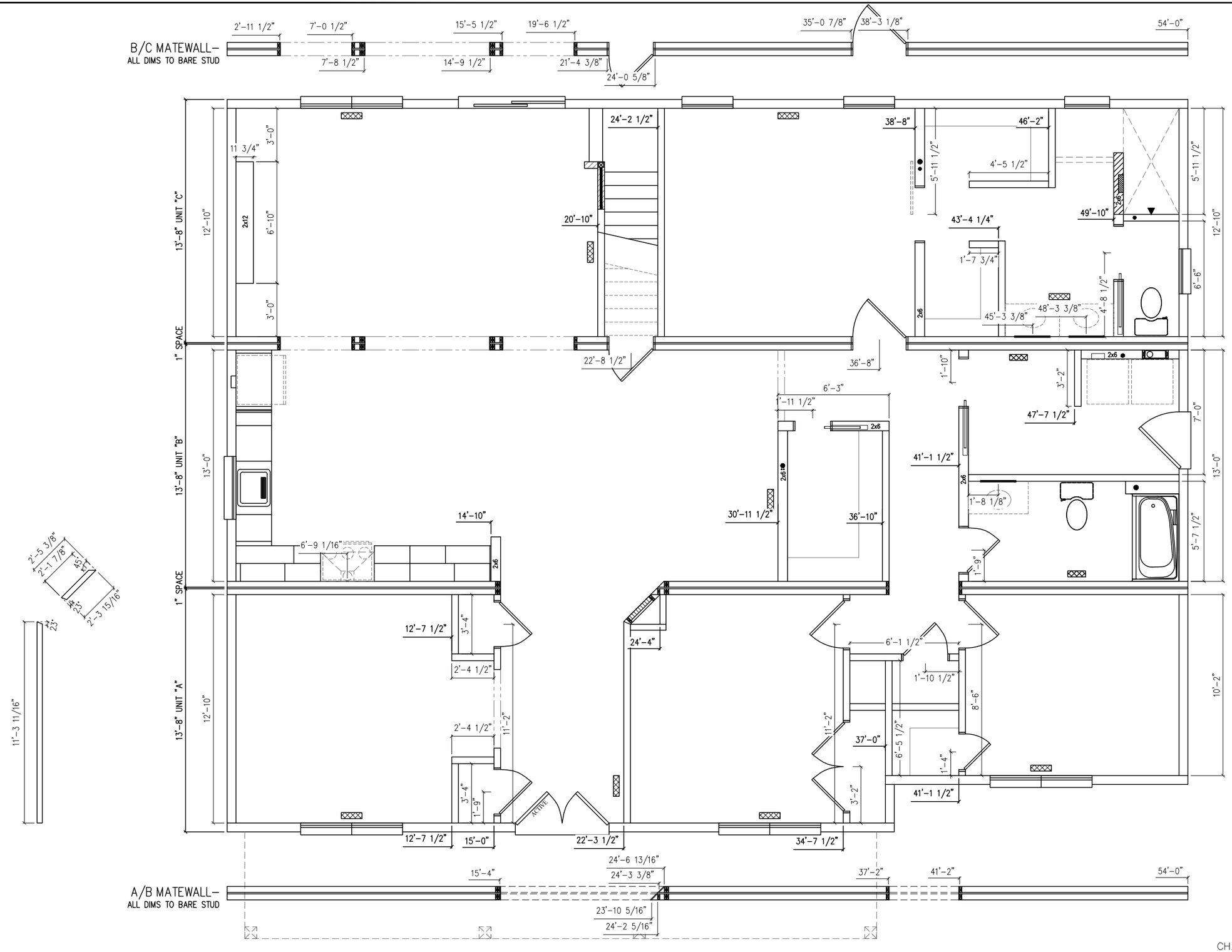

CHADK 7/8/2022 9:43:35 AM

THIS PRINT HAS BEEN EXTRACTED FROM A SET OF A PREVIOUSLY APPROVED SYSTEM OR A MODEL APPROVAL AND IS ON FILE WITH STATE AND IS OK TO BE BUILT

X Scott Witmer

BUILDER	CUSTOMER
REAL ESTATE by K LLC	LOT 3 – MODE

CITY	COUNTY	STATE
FREDERICKSBURG	SPOTSYLVANIA	VA

WIND SPEED	SNOW LOAD	SQ. FT.
115 MPH VULT	25	2179

ORDER NO.	SERIAL NO.	FILE NO.
102709	17640	P102709(660)

4154–CBS CAPE
1st STORY WALL DIMESNIONS

MBSP MODULAR BUILDING SYSTEMS OF PA

Virginia Homes Building Systems
Virginia Homes Building Systems
200 Custom Ave.
Middleburg, PA 17842
(888) 553-1414
www.virginiahomesbuildingsystems.com

DATE:	DRAWN BY:	STATUS:
10/12/21	CAP	CONFO
11/10/2021	CLP	REV CONFO
03/11/2022	BLF	FINAL
3/25/22	CAP	PA
4/8/22	CAP	PURCHASING
4/12/2022	COB	APPROVAL
6/22/22	CDK	PRODUCTION

PAGE: 3.1a

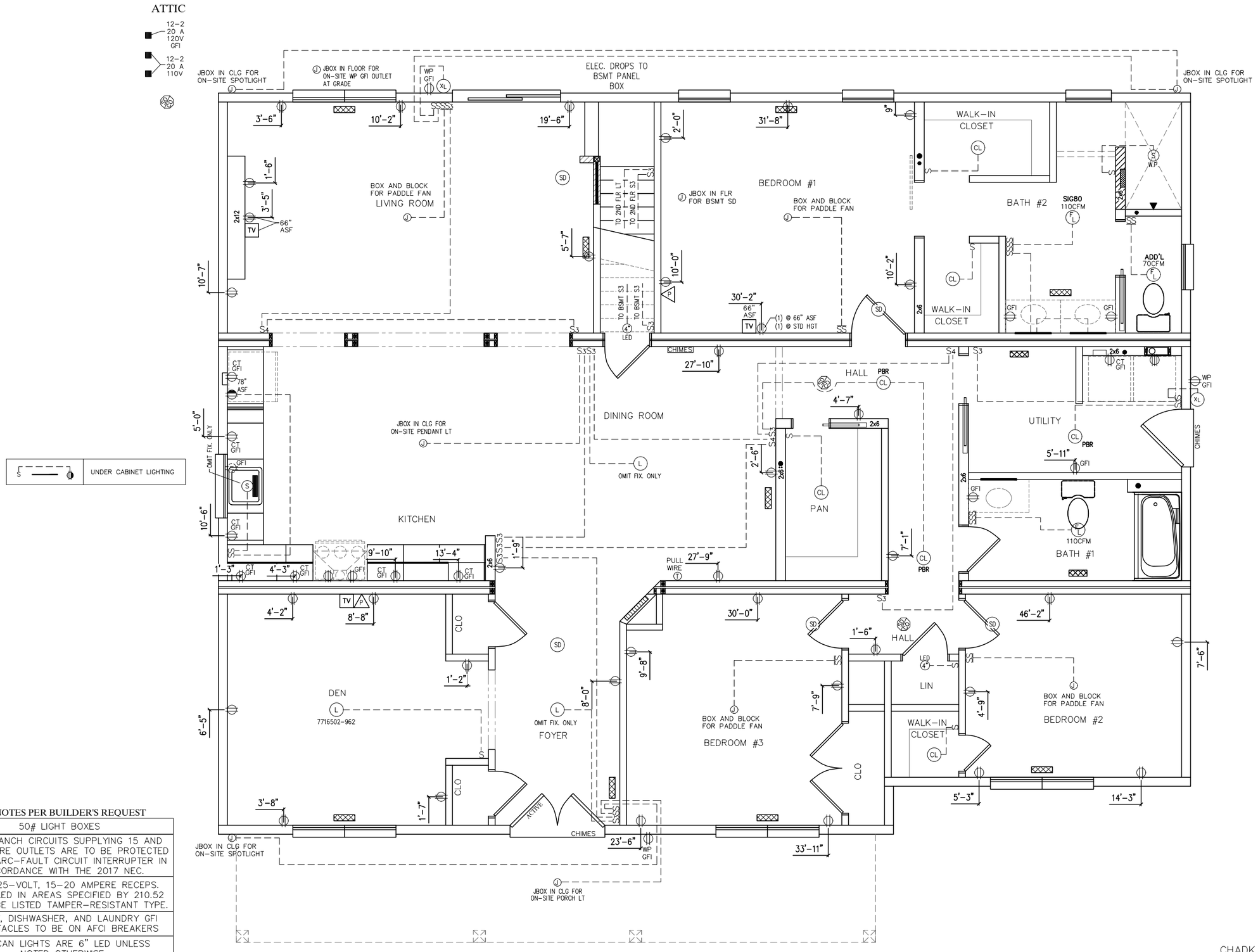

PBR - DENOTES PER BUILDER'S REQUEST
50# LIGHT BOXES
ALL BRANCH CIRCUITS SUPPLYING 15 AND 20 AMPERE OUTLETS ARE TO BE PROTECTED BY AN ARC-FAULT CIRCUIT INTERRUPTER IN ACCORDANCE WITH THE 2017 NEC.
ALL 125-VOLT, 15-20 AMPERE RECEPS. INSTALLED IN AREAS SPECIFIED BY 210.52 SHALL BE LISTED TAMPER-RESISTANT TYPE.
UTILITY, DISHWASHER, AND LAUNDRY GFI RECEPTACLES TO BE ON AFCI BREAKERS
ALL CAN LIGHTS ARE 6" LED UNLESS NOTED OTHERWISE

CHADK 7/8/2022 9:43:35 AM

THIS PRINT HAS BEEN EXTRACTED FROM A SET OF A PREVIOUSLY APPROVED SYSTEM OR A MODEL APPROVAL AND IS ON FILE WITH STATE AND IS OK TO BE BUILT

X Scott Witmer

BUILDER	CUSTOMER	STATE
REAL ESTATE by K LLC	LOT 3 - MODE	VA
CITY	COUNTY	SQ. FT.
FREDERICKSBURG	SPOTSYLVANIA	2179
WIND SPEED	SNOW LOAD	
115 MPH VULT	25	
ORDER NO.	SERIAL NO.	FILE NO.
102709	17640	P102709(660)

4154-CBS CAPE
1st STORY ELECT. PLAN

MBSP MODULAR BUILDING SYSTEMS OF PA

Virginia Homes Building Systems
Virginia Homes Building Systems
200 Custom Ave.
Middleburg, PA 17842
(888) 553-1414
www.virginiahomesbuildingsystems.com

DATE:	DRAWN BY:	STATUS:
10/12/21	CAP	CONFO
11/10/2021	CLP	REV CONFO
03/11/2022	BLF	FINAL
3/25/22	CAP	PA
4/8/22	CAP	PURCHASING
4/12/2022	COB	APPROVAL
6/22/22	CDK	PRODUCTION

PAGE: 4

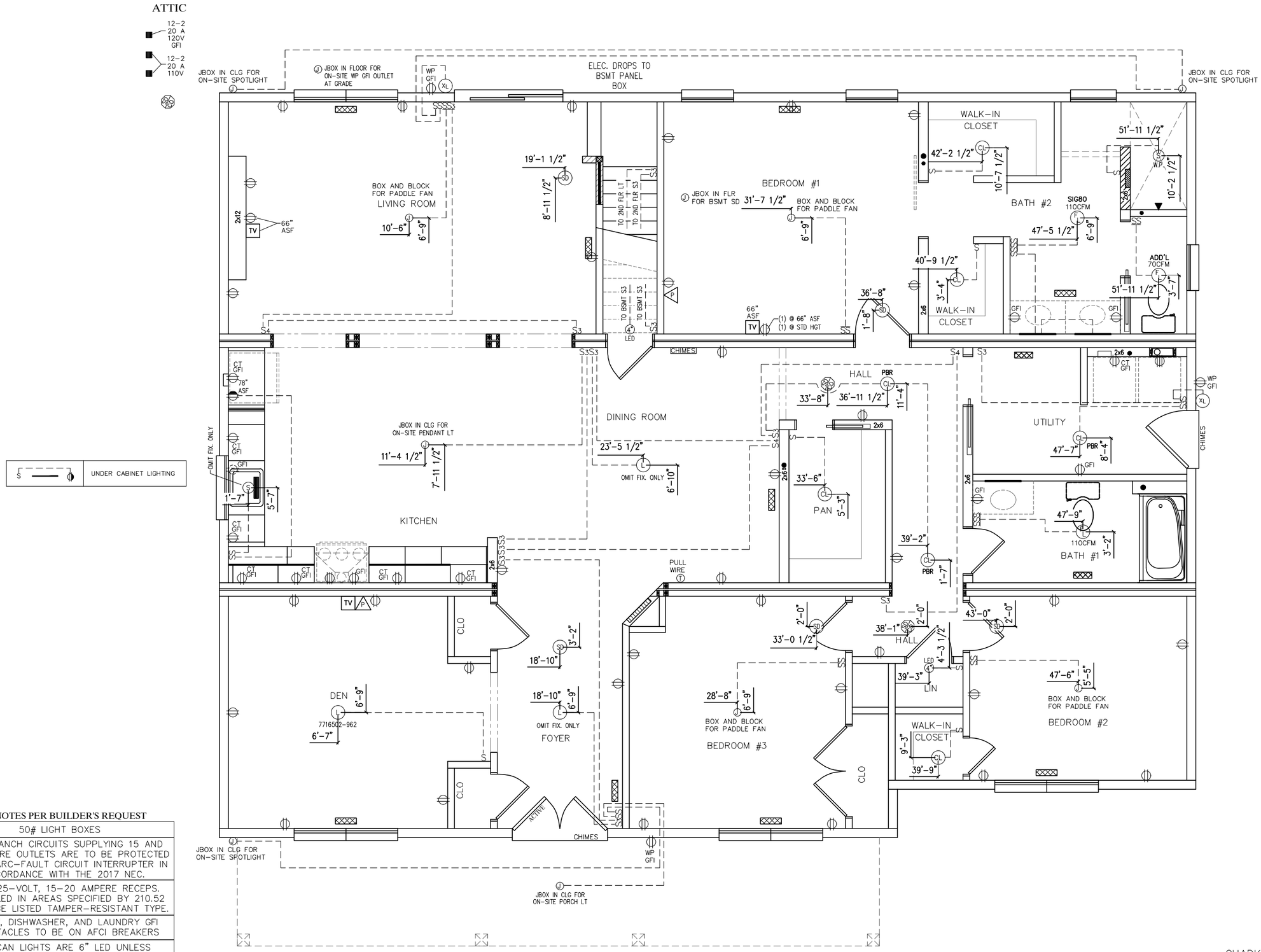

PBR - DENOTES PER BUILDER'S REQUEST

50# LIGHT BOXES
ALL BRANCH CIRCUITS SUPPLYING 15 AND 20 AMPERE OUTLETS ARE TO BE PROTECTED BY AN ARC-FAULT CIRCUIT INTERRUPTER IN ACCORDANCE WITH THE 2017 NEC.
ALL 125-VOLT, 15-20 AMPERE RECEPS. INSTALLED IN AREAS SPECIFIED BY 210.52 SHALL BE LISTED TAMPER-RESISTANT TYPE.
UTILITY, DISHWASHER, AND LAUNDRY GFI RECEPTACLES TO BE ON AFCI BREAKERS
ALL CAN LIGHTS ARE 6" LED UNLESS NOTED OTHERWISE

CHADK 7/8/2022 9:43:35 AM

THIS PRINT HAS BEEN EXTRACTED FROM A SET OF A PREVIOUSLY APPROVED SYSTEM OR A MODEL APPROVAL AND IS ON FILE WITH STATE AND IS OK TO BE BUILT

X Scott Witmer

BUILDER	CUSTOMER	STATE
REAL ESTATE by K LLC	LOT 3 – MODE	VA
CITY / COUNTY	SQ. FT.	
FREDERICKSBURG / SPOTSYLVANIA	2179	
WIND SPEED / SNOW LOAD		
115 MPH VULT / 25		
ORDER NO. / SERIAL NO. / FILE NO.		
102709 / 17640 / P102709(660)		

4154-CBS CAPE
1st STORY ELECT. PLAN

Virginia Homes Building Systems
Virginia Homes Building Systems
200 Custom Ave.
Middleburg, PA 17842
(888) 553-1414
www.virginiahomesbuildingsystems.com

MBSP MODULAR BUILDING SYSTEMS OF PA

DATE:	DRAWN BY:	STATUS:
10/12/21	CAP	CONFO
11/10/2021	CLP	REV CONFO
03/11/2022	BLF	FINAL
3/25/22	CAP	PA
4/8/22	CAP	PURCHASING
4/12/2022	COB	APPROVAL
6/22/22	CDK	PRODUCTION

PAGE: 4

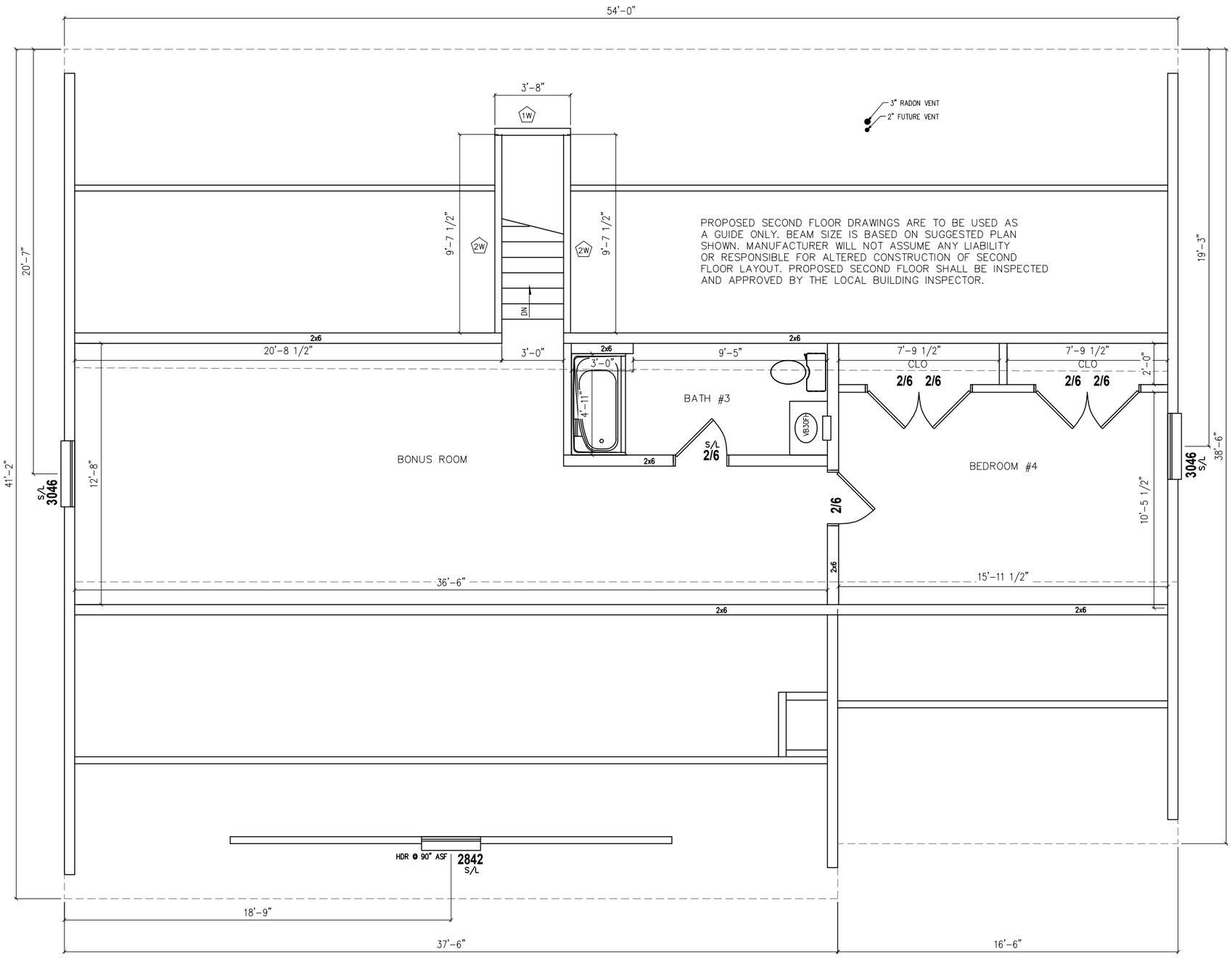

CHADK 7/8/2022 9:43:35 AM

NOTES:
1. ✻- DENOTES ADDITIONAL COLUMN IN BASEMENT
2. 2X6 EXTERIOR WALLS 16" O.C.
3. ROOF RAFTERS 16" O.C.
4.
5.
6.
7.
8.
9.
10.
11.
12.

THIS PRINT HAS BEEN EXTRACTED FROM A SET OF A PREVIOUSLY APPROVED SYSTEM OR A MODEL APPROVAL AND IS ON FILE WITH STATE AND IS OK TO BE BUILT

X Scott Witmer

BUILDER	CUSTOMER
REAL ESTATE by K LLC	LOT 3 – MODE

CITY	COUNTY	STATE
FREDERICKSBURG	SPOTSYLVANIA	VA

WIND SPEED	SNOW LOAD	SQ. FT.
115 MPH VULT	25	2179

ORDER NO.	SERIAL NO.	FILE NO.
102709	17640	P102709(660)

4154–CBS CAPE
2nd STORY FLOOR PLAN

Virginia Homes Building Systems
Virginia Homes Building Systems
200 Custom Ave.
Middleburg, PA 17842
(888) 553-1414
www.virginiahomesbuildingsystems.com

DATE:	DRAWN BY:	STATUS:
10/12/21	CAP	CONFO
11/10/2021	CLP	REV CONFO
03/11/2022	BLF	FINAL
3/25/22	CAP	PA
4/8/22	CAP	PURCHASING
4/12/2022	COB	APPROVAL
6/22/22	CDK	PRODUCTION

PAGE: 3.2

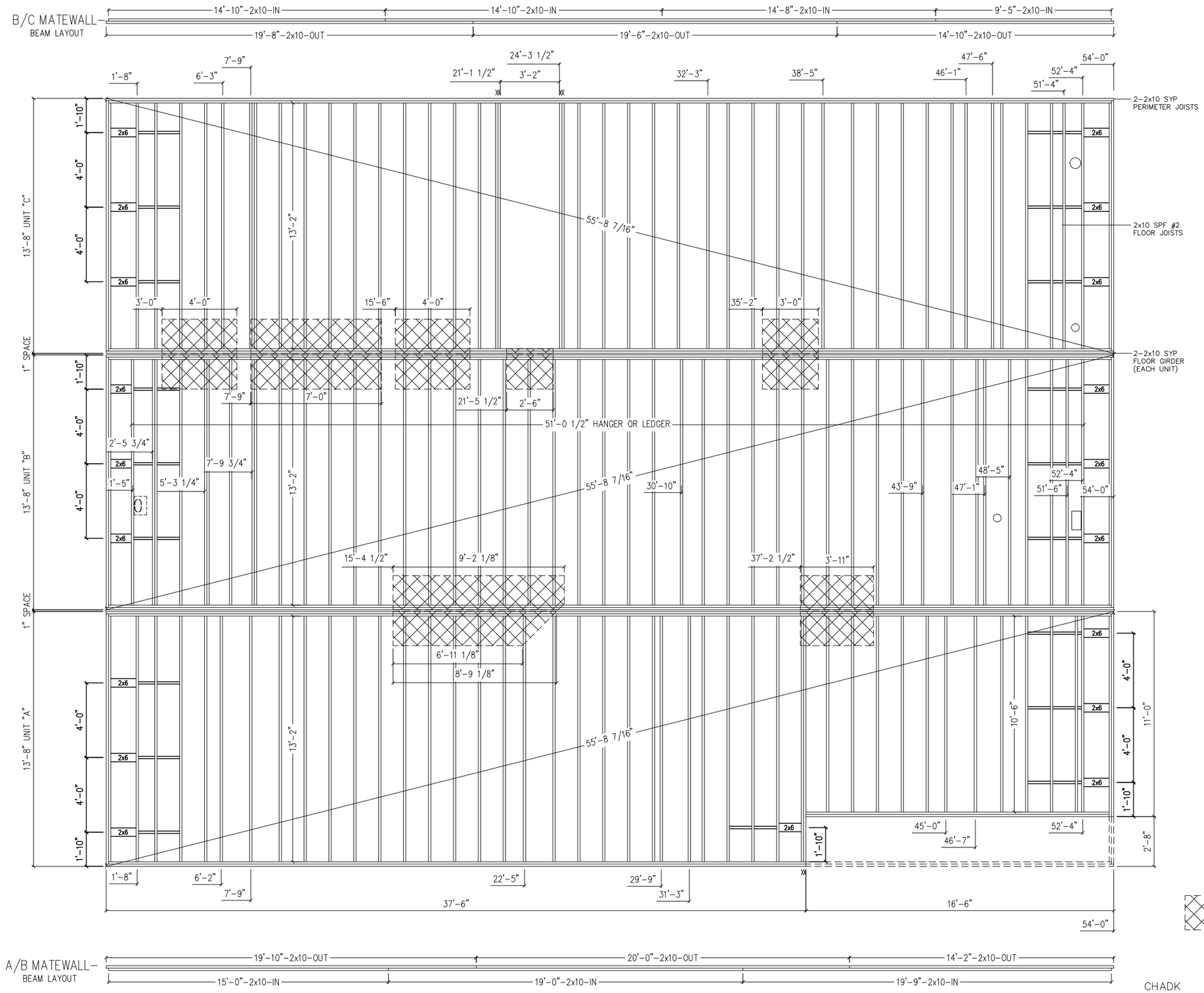

CHADK 7/8/2022 9:43:35 AM

THIS PRINT HAS BEEN EXTRACTED FROM A SET OF A PREVIOUSLY APPROVED SYSTEM OR A MODEL APPROVAL AND IS ON FILE WITH STATE AND IS OK TO BE BUILT

Scott Witmer

BUILDER	CUSTOMER	STATE	SQ. FT.
REAL ESTATE by K LLC	LOT 3 – MODE	VA	2179

CITY	COUNTY	SNOW LOAD	FILE NO.
FREDERICKSBURG	SPOTSYLVANIA	25	P102709(660)

WIND SPEED	ORDER NO.	SERIAL NO.
115 MPH VULT	102709	17640

4154-CBS CAPE
1ST STORY FLOOR FRAMING

MBSP MODULAR BUILDING SYSTEMS OF PA

Virginia Homes Building Systems
Virginia Homes Building Systems
200 Custom Ave.
Middleburg, PA 17842
(888) 553-1414
www.virginiahomesbuildingsystems.com

DATE:	DRAWN BY:	STATUS:
10/12/21	CAP	CONFO
11/10/2021	CLP	REV CONFO
03/11/2022	BLF	FINAL
3/25/22	CAP	PA
4/8/22	CAP	PURCHASING
4/12/2022	COB	APPROVAL
6/22/22	CDK	PRODUCTION

PAGE: 11.1

9'-0" CEILINGS
SHIPLOOSE OVERHANG BLOCK & EXTENSIONS
USE LOW PROFILE TIRES

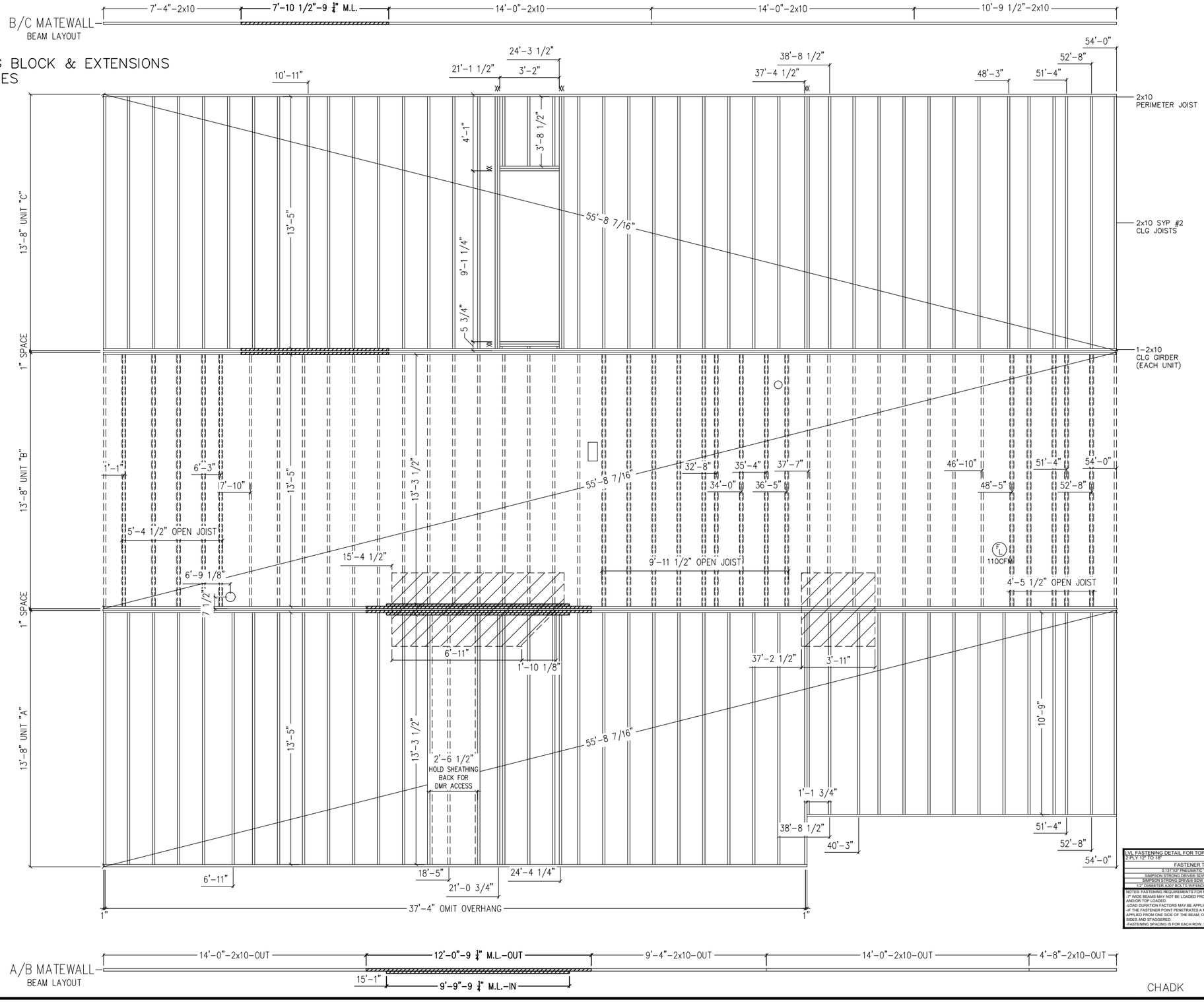

LVL FASTENING DETAIL FOR TOP/SIDE LOADED BEAMS
2 PLY 12" TO 18"

FASTENER TYPE	ROWS	SPACING
0.131"X3" PNEUMATIC "SUNF" NAILS	4	16"
SIMPSON STRONG DRIVE® SDW SCREWS ONE FACE	3	16"
SIMPSON STRONG DRIVE® SDW SCREWS BOTH FACES	2	16"
1/2" DIAMETER A307 BOLTS W/FENDER WASHERS EACH FACE	2	16"

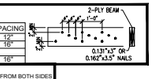

NOTES: FASTENING REQUIREMENTS FOR MULTIPLE PLY MEMBERS:
-1" WIDE BEAMS MAY NOT BE LOADED FROM ONE SIDE ONLY. THEY MUST BE LOADED FROM BOTH SIDES AND/OR TOP LOADED.
-LOAD DURATION FACTORS MAY BE APPLIED TO THE LOADS LISTED ABOVE.
-IF THE FASTENER POINT PENETRATES A MINIMUM OF 75% OF THE 4TH PLY OF THE BEAM, THEY MAY BE APPLIED FROM ONE SIDE OF THE BEAM; OTHERWISE, THE FASTENERS MUST BE APPLIED FROM BOTH SIDES AND STAGGERED.
-FASTENING SPACING IS FOR EACH ROW. STAGGER SPACING BETWEEN ROWS OF FASTENERS.

CHADK 7/8/2022 9:43:35 AM

NOTE:
CROSS HATCHED AREA INDICATES OMISSION OF CLG GYPSUM

==========BOTTOMS ONLY

THIS PRINT HAS BEEN EXTRACTED FROM A SET OF A PREVIOUSLY APPROVED SYSTEM OR A MODEL APPROVAL AND IS ON FILE WITH STATE AND IS OK TO BE BUILT
X Scott Witmer

BUILDER	CUSTOMER
REAL ESTATE by K LLC	LOT 3 – MODE

CITY	COUNTY	STATE
FREDERICKSBURG	SPOTSYLVANIA	VA

WIND SPEED	SNOW LOAD	SQ. FT.
115 MPH VULT	25	2179

ORDER NO.	SERIAL NO.	FILE NO.
102709	17640	P102709(660)

4154–CBS CAPE
1ST STORY CEILING FRAMING

Virginia Homes Building Systems
Virginia Homes Building Systems
200 Custom Ave.
Middleburg, PA 17842
(888) 553-1414
www.virginiahomesbuildingsystems.com
MBSP MODULAR BUILDING SYSTEMS OF PA

DATE:	DRAWN BY:	STATUS:
10/12/21	CAP	CONFO
11/10/2021	CLP	REV CONFO
03/11/2022	BLF	FINAL
3/25/22	CAP	PA
4/8/22	CAP	PURCHASING
4/12/2022	COB	APPROVAL
6/22/22	CDK	PRODUCTION

PAGE: 11.2

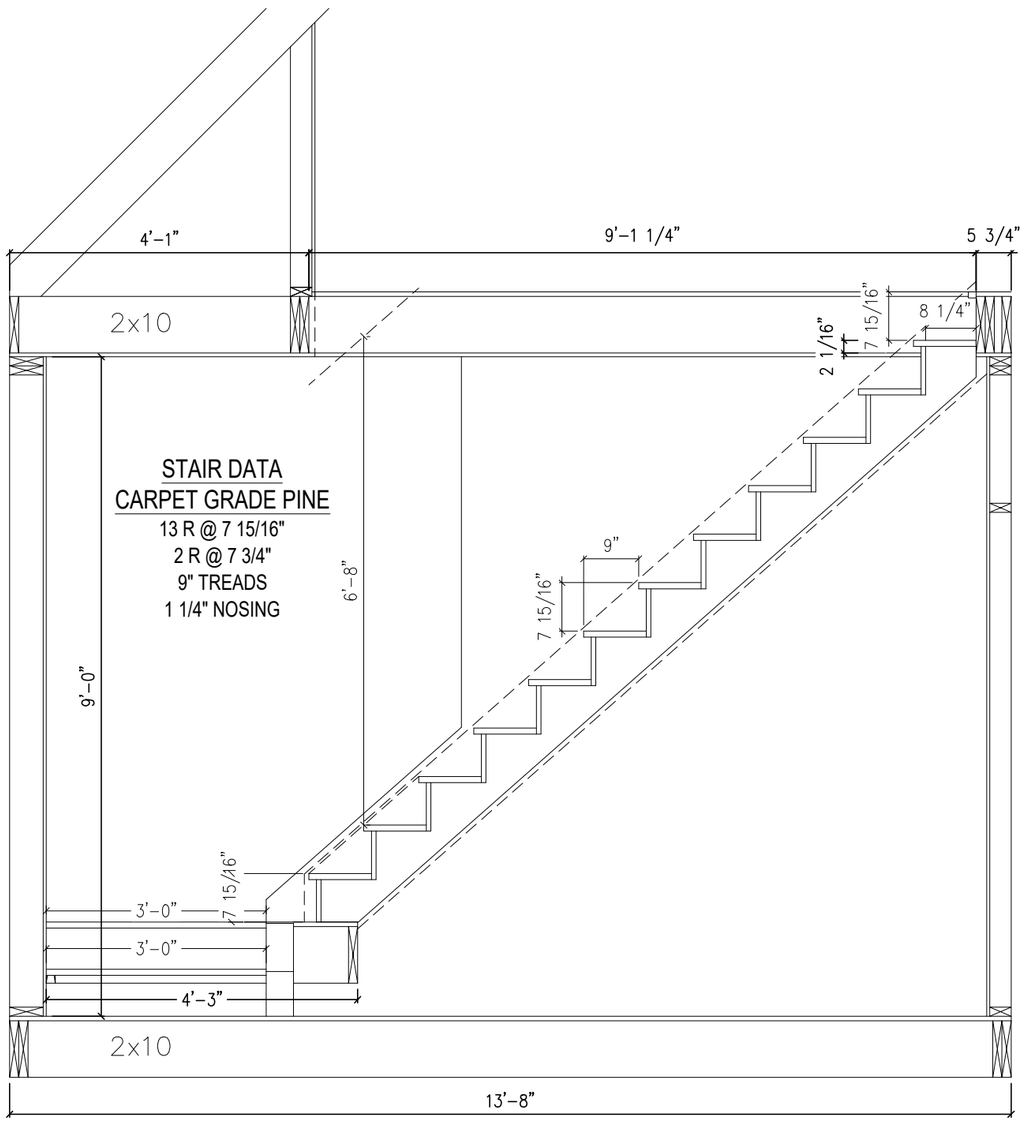

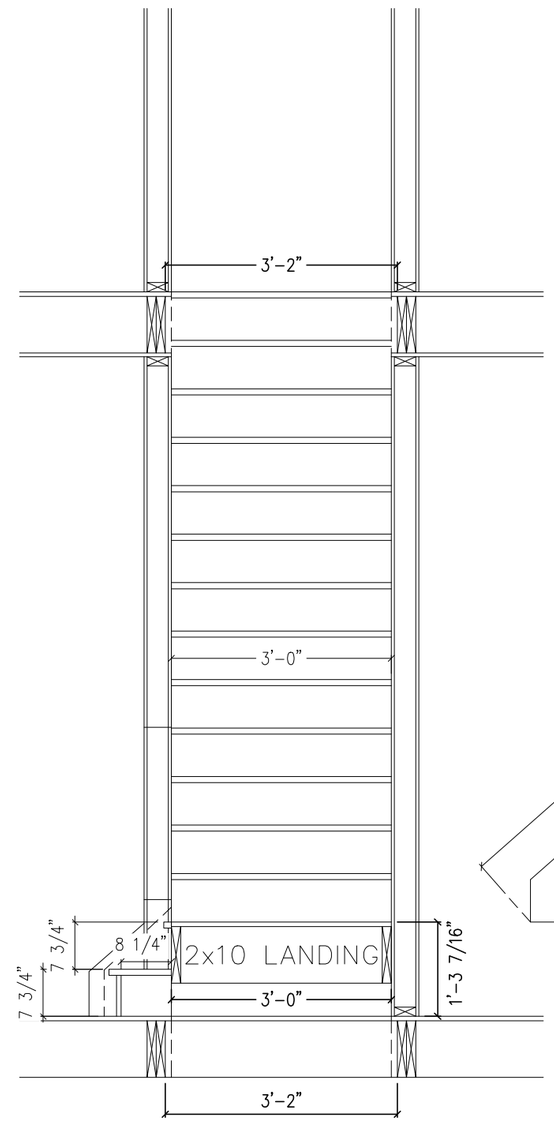

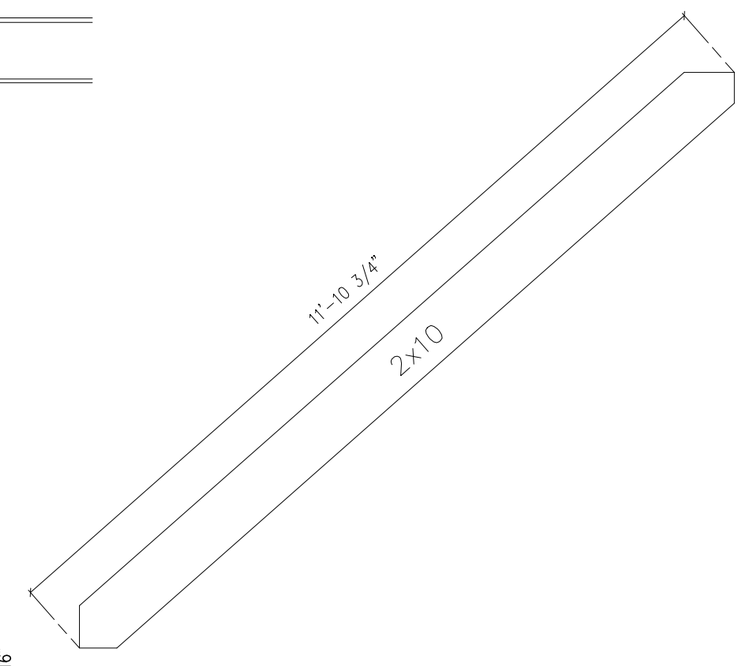

BUILDER	REAL ESTATE by K LLC	CUSTOMER	LOT 3 – MODE
CITY	FREDERICKSBURG	COUNTY	SPOTSYLVANIA
STATE	VA		
WIND SPEED	??? 3 SECOND GUST	SNOW LOAD	?????
SQ. FT.	2179		
ORDER NO.	102709	SERIAL NO.	17640
FILE NO.	P102709(660)		

4154–CBS CAPE
STAIR DETAIL #1

MBSP MODULAR BUILDING SYSTEMS OF PA
Virginia Homes Building Systems
Virginia Homes Building Systems (888) 553-1414
200 Custom Ave. www.virginiahomesbuildingsystems.com
Middleburg, PA 17842

DATE:	DRAWN BY:	STATUS:
6/22/22	CDK	PRODUCTION

THIS PRINT HAS BEEN EXTRACTED FROM A SET OF A PREVIOUSLY APPROVED SYSTEM OR A MODEL APPROVAL AND IS ON FILE WITH STATE AND IS OK TO BE BUILT

X Scott Witmer

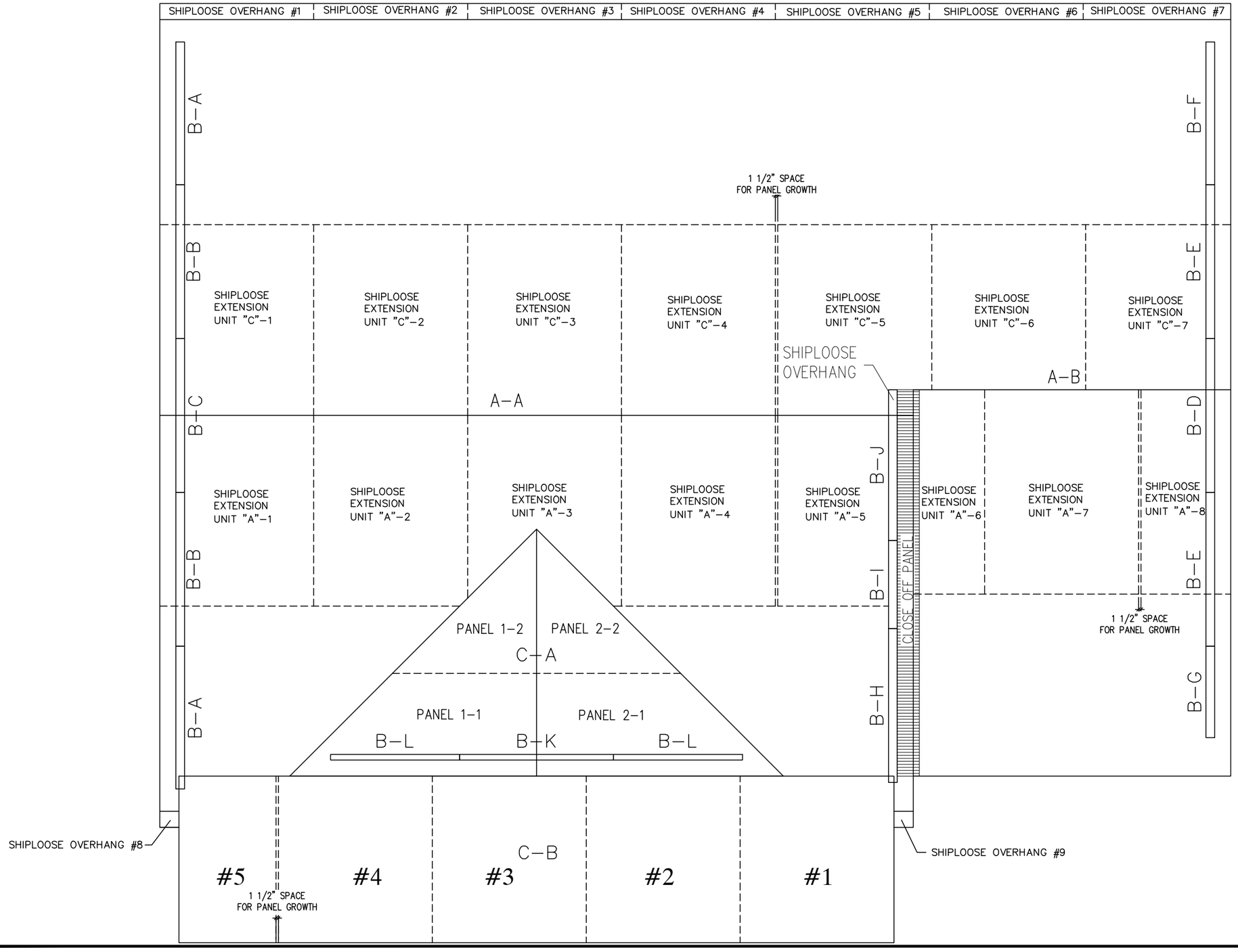

CHADK 7/8/2022 9:43:35 AM

THIS PRINT HAS BEEN EXTRACTED FROM A SET OF A PREVIOUSLY APPROVED SYSTEM OR A MODEL APPROVAL AND IS ON FILE WITH STATE AND IS OK TO BE BUILT

X Scott Witmer

BUILDER	CUSTOMER
REAL ESTATE by K LLC	LOT 3 - MODE

CITY	COUNTY	STATE
FREDERICKSBURG	SPOTSYLVANIA	VA

WIND SPEED	SNOW LOAD	SQ. FT.
115 MPH VULT	25	2179

ORDER NO.	SERIAL NO.	FILE NO.
102709	17640	P102709(660)

4154-CBS CAPE
BIRD EYE VIEW

MBSP MODULAR BUILDING SYSTEMS OF PA

Virginia Homes Building Systems

Virginia Homes Building Systems
200 Custom Ave.
Middleburg, PA 17842
(888) 553-1414
www.virginiahomesbuildingsystems.com

DATE:	DRAWN BY:	STATUS:
10/12/21	CAP	CONFO
11/10/2021	CLP	REV CONFO
03/11/2022	BLF	FINAL
3/25/22	CAP	PA
4/8/22	CAP	PURCHASING
4/12/2022	COB	APPROVAL
6/22/22	CDK	PRODUCTION

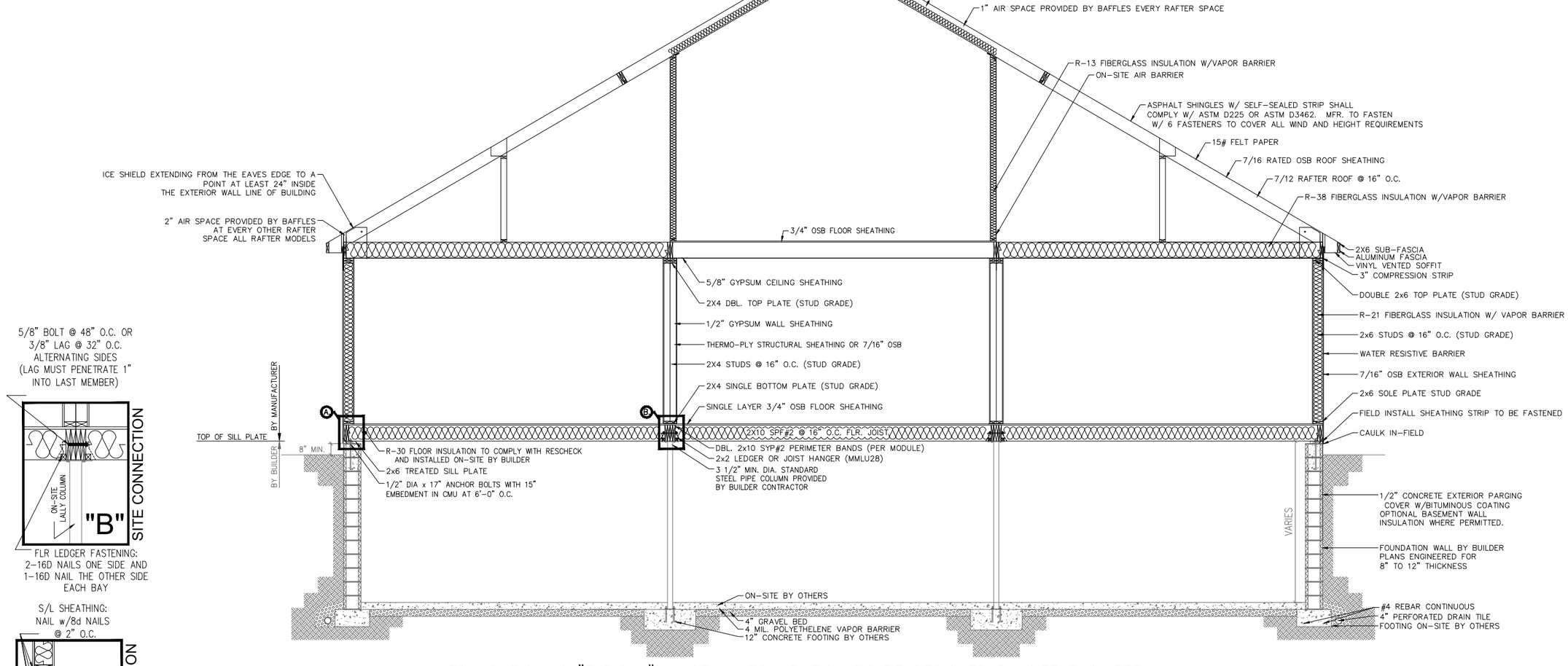

5/8" BOLT @ 48" O.C. OR 3/8" LAG @ 32" O.C. ALTERNATING SIDES (LAG MUST PENETRATE 1" INTO LAST MEMBER)

FLR LEDGER FASTENING: 2-16D NAILS ONE SIDE AND 1-16D NAIL THE OTHER SIDE EACH BAY

S/L SHEATHING: NAIL w/8d NAILS @ 2" O.C.

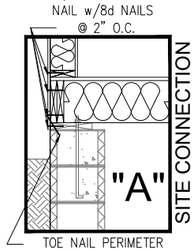

TOE NAIL PERIMETER TO SILL PLATE w/16d NAILS @ 6" O.C.

*FOUNDATION IS "TYPICAL". ACTUAL FOUNDATION TO BE DESIGNED BY SITE ENGINEER

CHADK 7/8/2022 9:43:35 AM

BUILDER	CUSTOMER
REAL ESTATE by K LLC	LOT 3 - MODE

CITY	COUNTY	STATE
FREDERICKSBURG	SPOTSYLVANIA	VA

WIND SPEED	SNOW LOAD	SQ. FT.
115 MPH VULT	25	2179

ORDER NO.	SERIAL NO.	FILE NO.
102709	17640	P102709(660)

4154-CBS CAPE
CROSS SECTION

Virginia Homes Building Systems
Virginia Homes Building Systems
200 Custom Ave.
Middleburg, PA 17842
(888) 553-1414
www.virginiahomesbuildingsystems.com
MBSP MODULAR BUILDING SYSTEMS OF PA

DATE:	DRAWN BY:	STATUS:
10/12/21	CAP	CONFO
11/10/2021	CLP	REV CONFO
03/11/2022	BLF	FINAL
3/25/22	CAP	PA
4/8/22	CAP	PURCHASING
4/12/2022	COB	APPROVAL
6/22/22	CDK	PRODUCTION

THIS PRINT HAS BEEN EXTRACTED FROM A SET OF A PREVIOUSLY APPROVED SYSTEM OR A MODEL APPROVAL AND IS ON FILE WITH STATE AND IS OK TO BE BUILT

X Scott Witmer

PAGE: 6

7/12 "47-3"

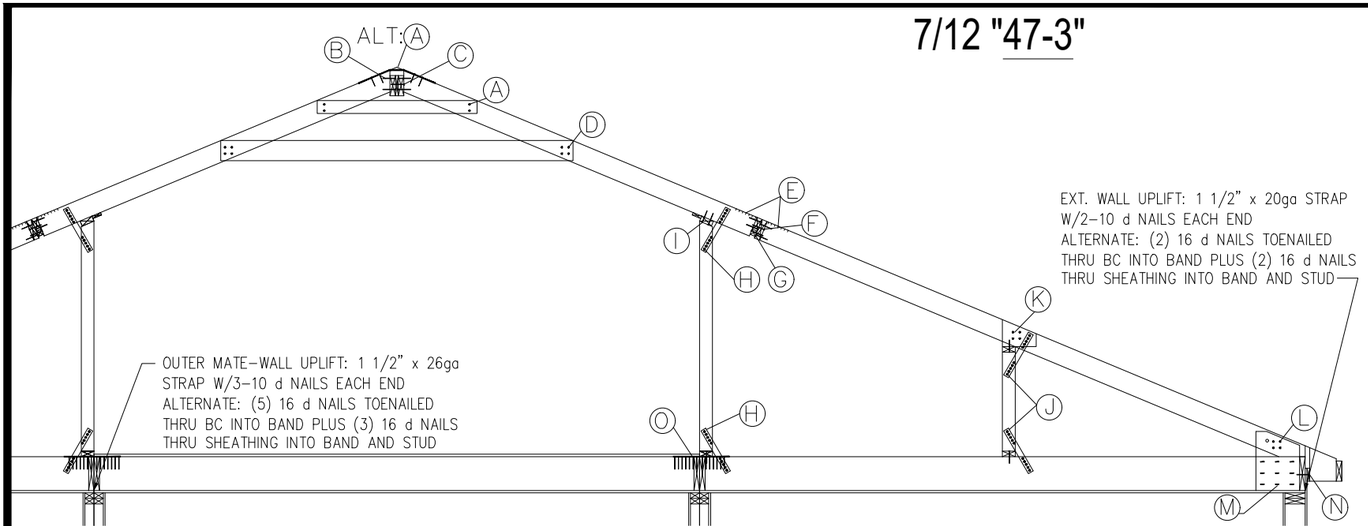

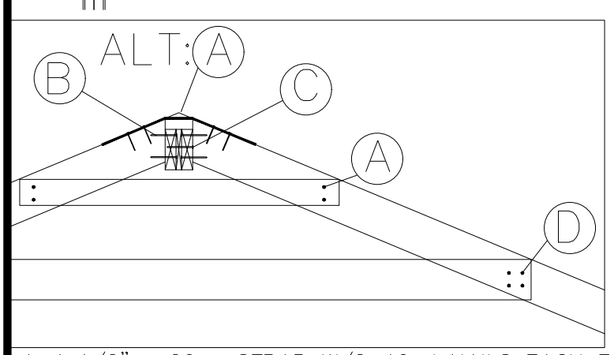

A=1 1/2" x 26ga STRAP W/2-10 d NAILS EACH END
A ALT=(2) 8d NAILS EACH END OF 1x4
B=(2) 16 d NAILS INTO END GRAIN EACH END
C=10 d NAILS AT 10 in O.C. THRU PLATES
D=(3) 16 d NAILS EACH END

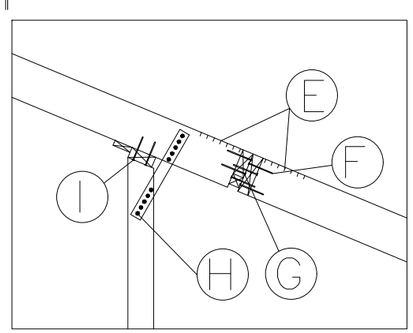

E= (2) 16 GA. STAPLES THRU SHEATHING EACH SIDE
F=(2) 16 d NAILS EACH END
G=10 d NAILS AT 12 in O.C. THRU PLATES
H=1 1/2" x 20ga STRAP W/3-10 d NAILS EACH END
I=(2) 16 d NAILS

K=(6) 16 d NAILS THRU CHORD BLOCK
J=1 1/2" x 20ga STRAP W/3-10 d NAILS EACH END

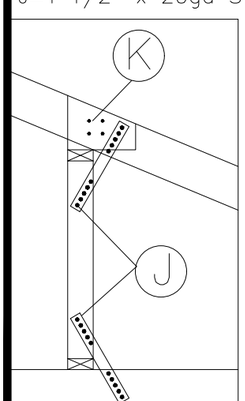

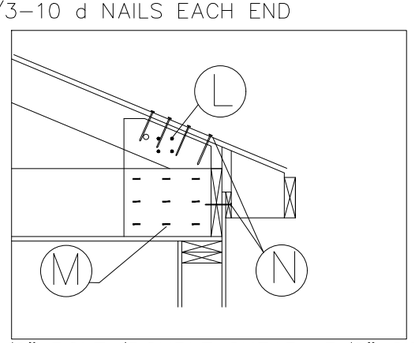

(1) 1/2" BOLT (DOUBLE SHEAR; 3/8" SIDE PLATES)
L=(2) 6 d NAILS
M=(5) 16 ga STAPLES
N=4-8d NAILS(ON-SITE) / 16d NAILS @ 48" O.C.(ON-SITE AT EAVE)

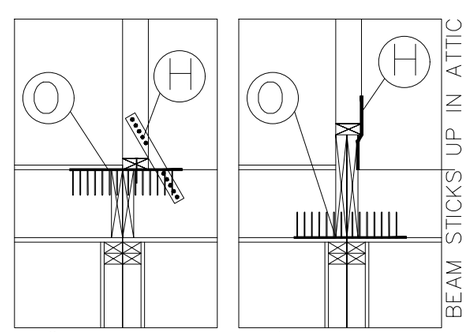

O=1.5"X20 GA. STRAP W/3-10 d NAILS EACH END
ALT:(6) 16 d NAILS THRU DECKING EACH SIDE

NOTE: NEW YORK STATE; SUBSTITUTE 20g. STRAPS FOR 26g. STRAPS

LVL FASTENING
TOP/SIDE LOADED BEAMS

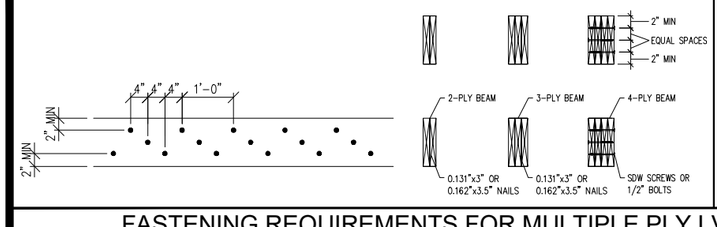

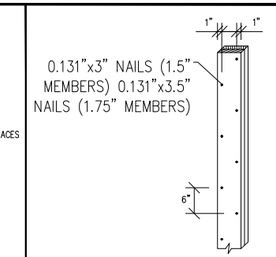

BUILT UP COLUMN FASTENING

FASTENING REQUIREMENTS FOR MULTIPLE PLY LVL MEMBERS:

FASTENER TYPE	ROWS	SPACING	2 PLY			3 PLY			4 PLY		
			UP TO 11.25"	12" TO 18"	18" TO 24"	UP TO 11.25"	12" TO 18"	18" TO 24"	UP TO 11.25"	12" TO 18"	18" TO 24"
0.131"X3" PNEUMATIC "GUN" NAILS	2	12"									
	3	12"	X			X					
	4	12"		X			X	X			
SIMPSON STRONG DRIVE® SDW SCREWS ONE FACE	2	24"									
	2	16"	X			X			X		
	3	24"									
	3	16"		X	X		X	X		X	X
SIMPSON STRONG DRIVE® SDW SCREWS BOTH FACES	2	24"									
	2	16"							X		
	3	24"									
	3	16"								X	X
1/2" DIAMETER A307 BOLTS W/FENDER WASHERS EACH FACE	2	24"									
	2	16"	X	X		X			X		
	3	24"									
	3	16"			X		X	X		X	X

NOTES: FASTENING REQUIREMENTS FOR MULTIPLE PLY MEMBERS:
-7" WIDE BEAMS MAY NOT BE LOADED FROM ONE SIDE ONLY. THEY MUST BE LOADED FROM BOTH SIDES AND/OR TOP LOADED.
-LOAD DURATION FACTORS MAY BE APPLIED TO THE LOADS LISTED ABOVE.
-IF THE FASTENER POINT PENETRATES A MINIMUM OF 75% OF THE 4TH PLY OF THE BEAM, THEY MAY BE APPLIED FROM ONE SIDE OF THE BEAM; OTHERWISE, THE FASTENERS MUST BE APPLIED FROM BOTH SIDES AND STAGGERED.
-FASTENING SPACING IS FOR EACH ROW. STAGGER SPACING BETWEEN ROWS OF FASTENERS.

CHADK 7/8/2022 9:43:35 AM

THIS PRINT HAS BEEN EXTRACTED FROM A SET OF A PREVIOUSLY APPROVED SYSTEM OR A MODEL APPROVAL AND IS ON FILE WITH STATE AND IS OK TO BE BUILT

X Scott Witmer

BUILDER: REAL ESTATE by K LLC
CUSTOMER: LOT 3 – MODE
CITY: FREDERICKSBURG
COUNTY: SPOTSYLVANIA
STATE: VA
WIND SPEED: 115 MPH VULT
SNOW LOAD: 25
SQ. FT.: 2179
ORDER NO.: 102709
SERIAL NO.: 17640
FILE NO.: P102709(660)

4154-CBS CAPE
CONNECTION

Virginia Homes Building Systems
Virginia Homes Building Systems (888) 553-1414
200 Custom Ave. www.virginiahomesbuildingsystems.com
Middleburg, PA 17842
MBSP MODULAR BUILDING SYSTEMS OF PA

DATE:	DRAWN BY:	STATUS:
10/12/21	CAP	CONFO
11/10/2021	CLP	REV CONFO
03/11/2022	BLF	FINAL
3/25/22	CAP	PA
4/8/22	CAP	PURCHASING
4/12/2022	COB	APPROVAL
6/22/22	CDK	PRODUCTION

PAGE: 8.1

7/12 "38-6" "R1"

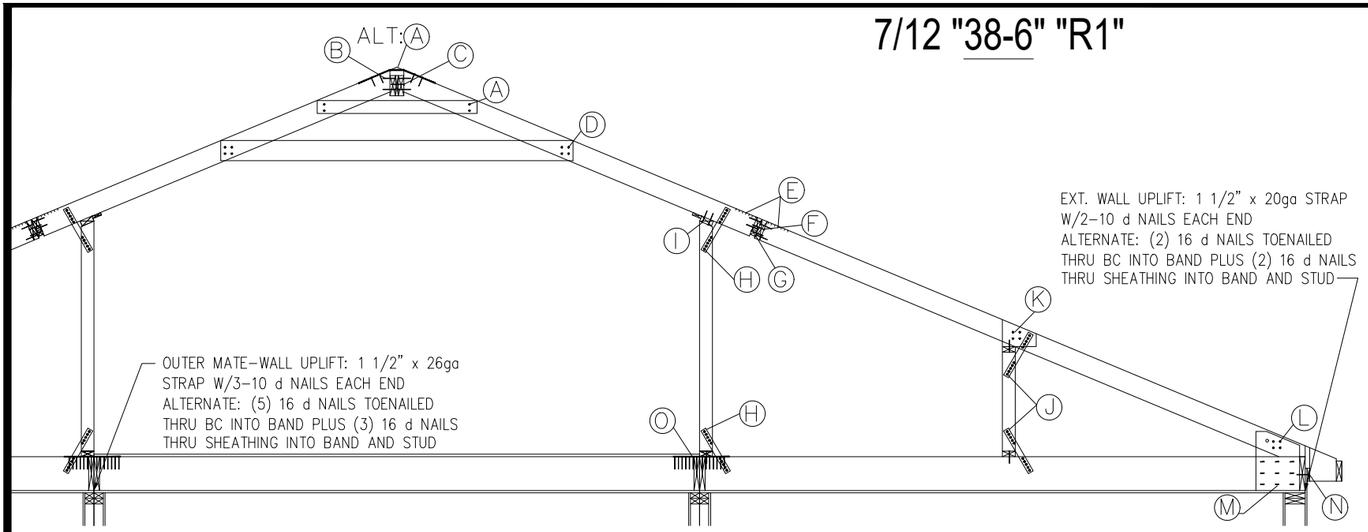

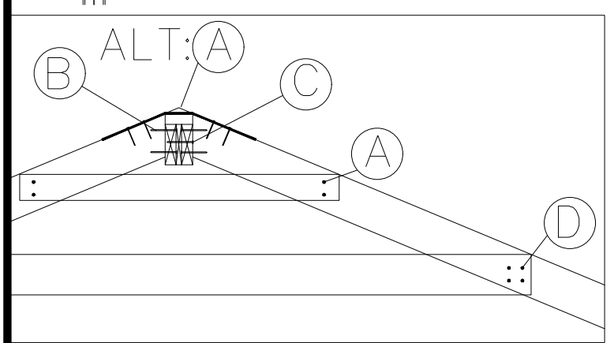

A=CS22 STRAP W/2-10 d NAILS EACH END
A ALT=(2) 8d NAILS EACH END OF 1x4
B=(2) 16 d NAILS INTO END GRAIN EACH END
C=1-16d NAIL EA. BAY
D=(2) 16 d NAILS EACH END

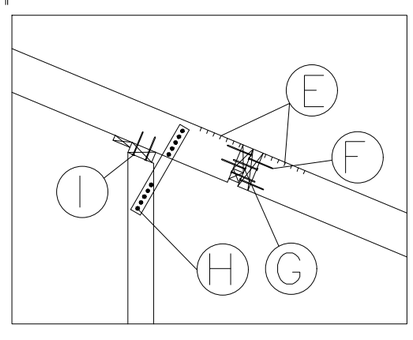

E= (2) 16 GA. STAPLES THRU SHEATHING EACH SIDE
F=(3) 16 d NAILS EACH END
G=2-16d NAILS EA. BAY
H=CS22 STRAP W/8-10 d NAILS EACH END
I=(2) 16 d NAILS

K=(6) 16 d NAILS THRU CHORD BLOCK
J=CS22 STRAP W/8-10 d NAILS EACH END

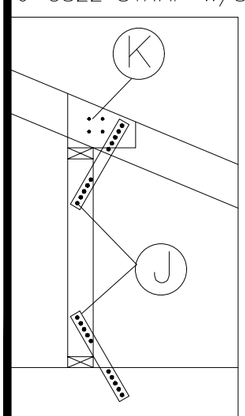

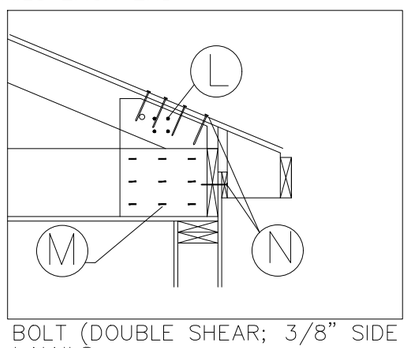

ATTACH STUD TO RAIL WITH
(5) 0.131" X 3" NAILS
(OR TOE-NAILS) MINIMUM
ATTACH RAIL TO TOP CHORD, BOTTOM
CHORD OR BLOCK WITH (5) 0.131" X3" NAILS
(OR TOE-NAILS)MINIMUM

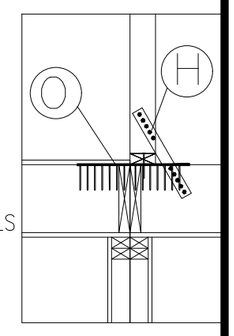

O=CS22 STRAP W/4-10 d NAILS EACH END
ALT:(4) 16 d NAILS THRU DECKING EACH SIDE

(1) 1/2" BOLT (DOUBLE SHEAR; 3/8" SIDE PLATES)
L=(1) 6 d NAILS
M=(12) 16 ga STAPLES
N=4-8d NAILS(ON-SITE) / 16d NAILS @ 48" O.C.(ON-SITE AT EAVE)

CRICKET FASTENING

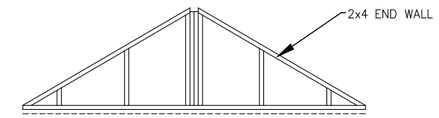

30# SNOW

RAFTER SPANS @ 16" O.C. PER TABLE R802.4.1(3)	
SIZE & GRADE	SPAN
2x4 SPF#2	8'-2"
2x6 SPF#2	11'-11"
2x8 SPF#2	15'-1"
2x10 SPF#2	18'-5"
2x12 SPF#2	21'-5"

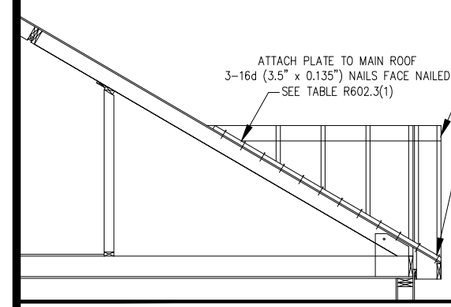

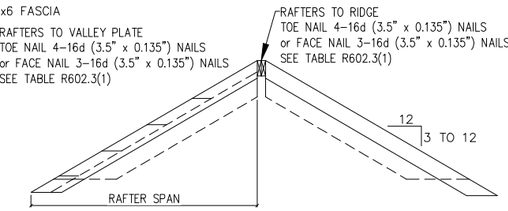

CHADK 7/8/2022 9:43:35 AM

THIS PRINT HAS BEEN EXTRACTED FROM A SET OF A PREVIOUSLY APPROVED SYSTEM OR A MODEL APPROVAL AND IS ON FILE WITH STATE AND IS OK TO BE BUILT

X Scott Witmer

BUILDER: REAL ESTATE by K LLC
CUSTOMER: LOT 3 – MODEL
CITY: FREDERICKSBURG
COUNTY: SPOTSYLVANIA
STATE: VA
WIND SPEED: 115 MPH VULT
SNOW LOAD: 25
SQ. FT.: 2179
ORDER NO.: 102709
SERIAL NO.: 17640
FILE NO.: P102709(660)

4154-CBS CAPE
CONNECTION

MBSP MODULAR BUILDING SYSTEMS OF PA
Virginia Homes Building Systems
Virginia Homes Building Systems
200 Custom Ave.
Middleburg, PA 17842
(888) 553-1414
www.virginiahomesbuildingsystems.com

DATE:	DRAWN BY:	STATUS:
10/12/21	CAP	CONFO
11/10/2021	CLP	REV CONFO
03/11/2022	BLF	FINAL
3/25/22	CAP	PA
4/8/22	CAP	PURCHASING
4/12/2022	COB	APPROVAL
6/22/22	CDK	PRODUCTION

PAGE: 8.2

9'–0" CEILINGS
SHIPLOOSE OVERHANG BLOCK & EXTENSIONS
USE LOW PROFILE TIRES

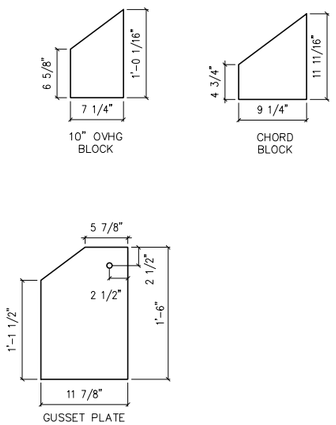

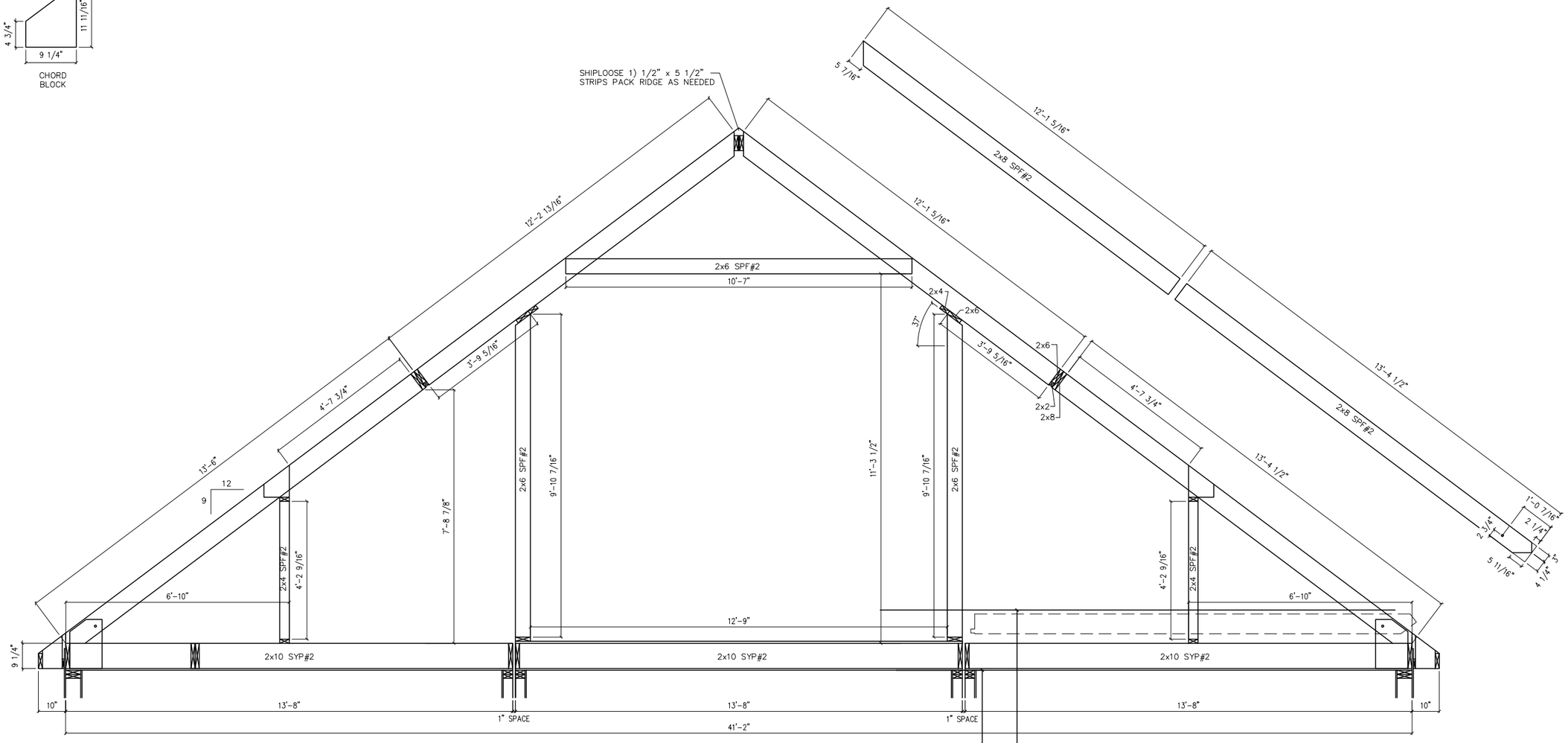

A–A

CHADK 7/8/2022 9:46:05 AM

NOTES: 1.
2.
3.
4.
5.
6.
7.
8.

BUILDER	REAL ESTATE by K LLC
CUSTOMER	LOT 3 – MODE
CITY	FREDERICKSBURG
COUNTY	SPOTSYLVANIA
STATE	VA
WIND SPEED	115 MPH VULT
WIND LOAD	
SNOW LOAD	25
ORDER NO.	102709
SERIAL NO.	17640
FILE NO.	

4154–CBS CAPE
41'–3" WIDE 2x10 BOTTOMS

Virginia Homes Building Systems
Virginia Homes Building Systems
200 Custom Ave.
Middleburg, PA 17842
(888) 553–1414
www.virginiahomesbuildingsystems.com
MBSP MODULAR BUILDING SYSTEMS OF PA

STATUS:	PRODUCTION
DRAWN BY:	CCW
DATE:	6/23/22

PAGE: 7.3

9'-0" CEILINGS
SHIPLOOSE OVERHANG BLOCK & EXTENSIONS
INSTALL OVERHANGS ON 11" WIDE BOX
USE LOW PROFILE TIRES

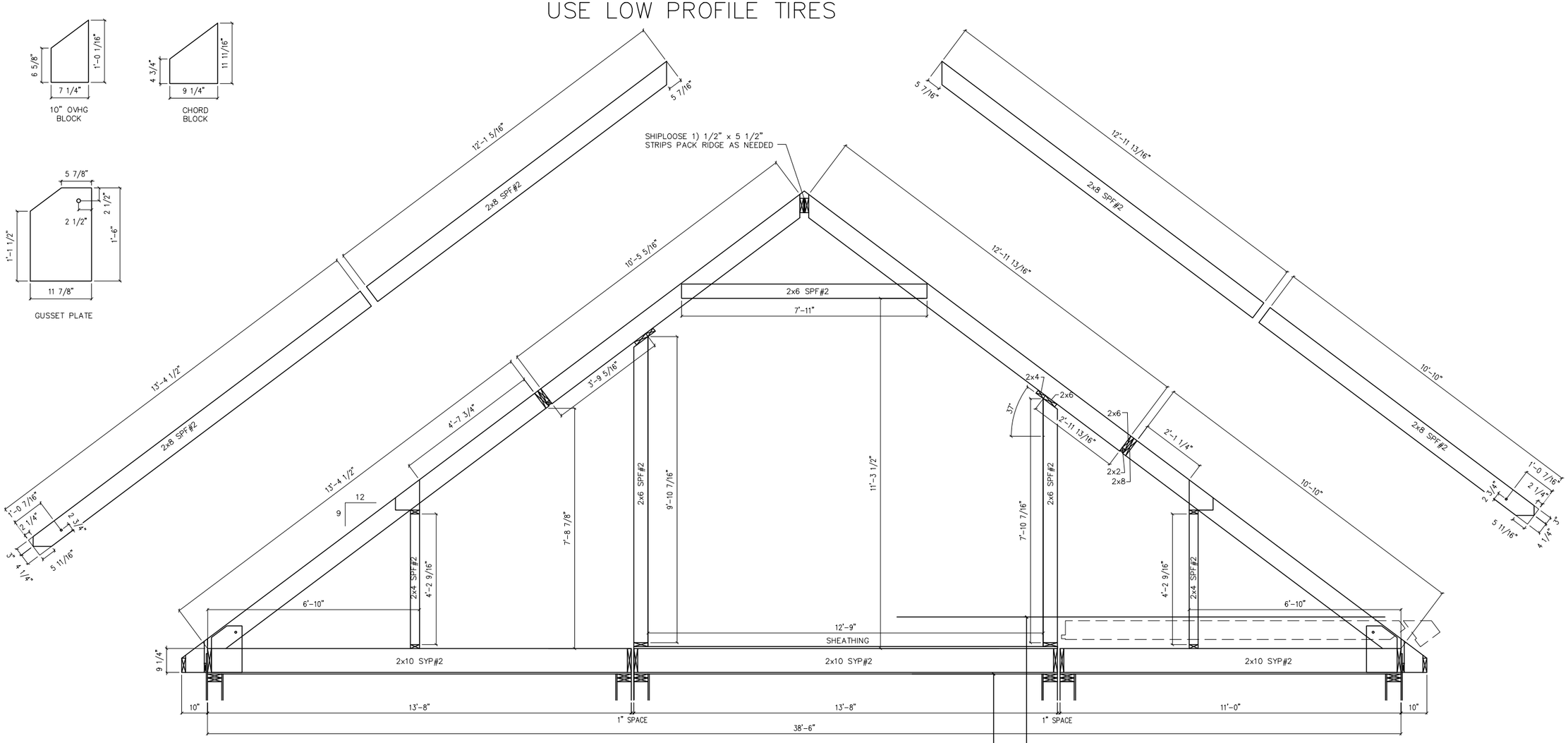

CHADK 7/8/2022 9:46:05 AM

NOTES: 1.
2.
3.
4.
5.
6.
7.
8.

BUILDER	REAL ESTATE by K LLC
CUSTOMER	LOT 3 - MODE
CITY	FREDERICKSBURG
COUNTY	SPOTSYLVANIA
STATE	VA
WIND SPEED	115 MPH VULT
WIND LOAD	
SNOW LOAD	25
ORDER NO.	102709
SERIAL NO.	17640
FILE NO.	

4154-CBS CAPE

Virginia Homes Building Systems
Virginia Homes Building Systems
200 Custom Ave.
Middleburg, PA 17842
(888) 553-1414
www.virginiahomesbuildingsystems.com
MBSP MODULAR BUILDING SYSTEMS OF PA

STATUS:	PRODUCTION
DRAWN BY:	CCW
DATE:	6/23/22

PAGE: 7.4

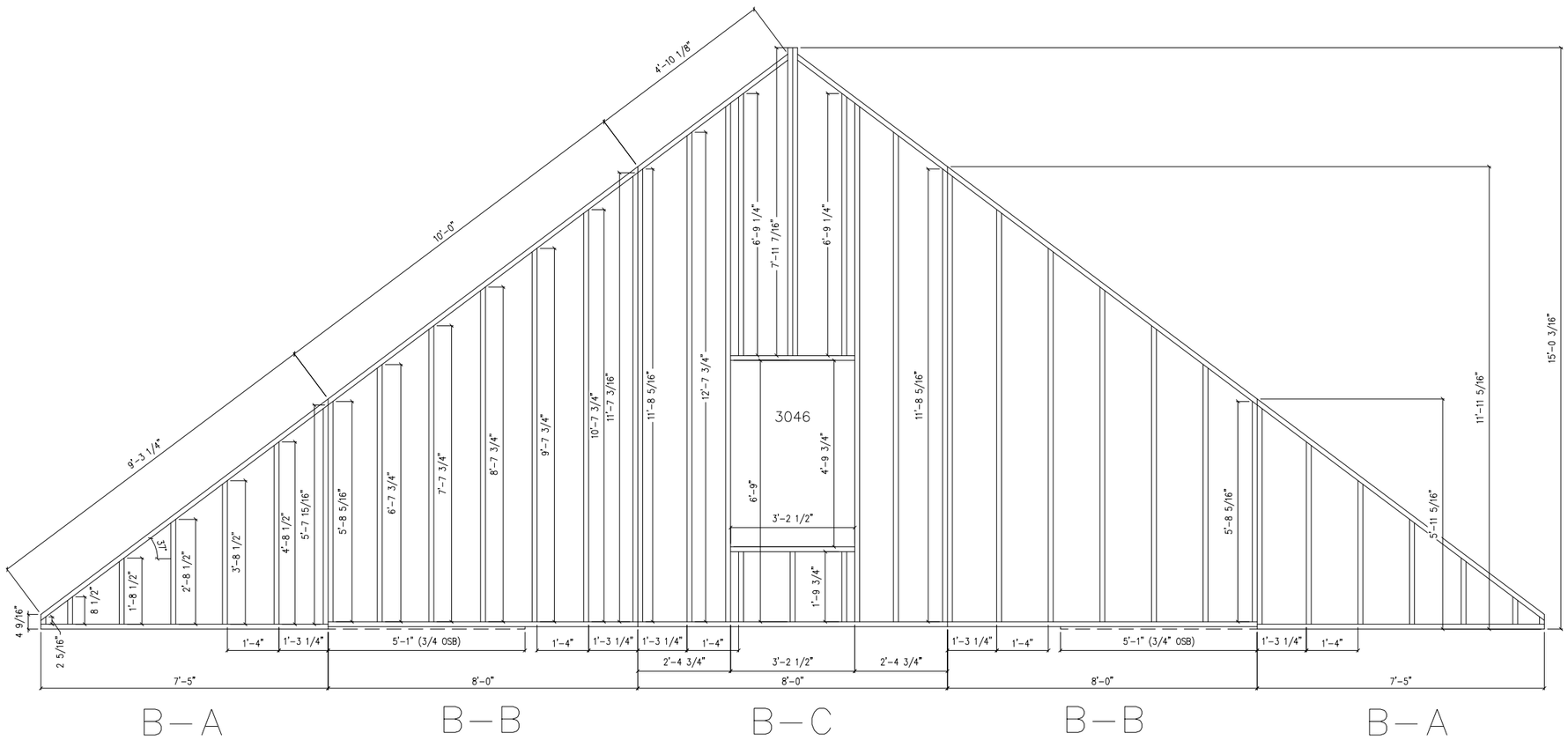

CHADK 7/8/2022 9:46:05 AM

BUILDER	REAL ESTATE by K LLC
CUSTOMER	LOT 3 – MODE
CITY	FREDERICKSBURG
COUNTY	SPOTSYLVANIA
STATE	VA
WIND SPEED	115 MPH VULT
WIND LOAD	
SNOW LOAD	25
ORDER NO.	102709
SERIAL NO.	17640
FILE NO.	

4154–CBS CAPE
ENDWALL 16" O.C.

MBSP MODULAR BUILDING SYSTEMS OF PA

Virginia Homes Building Systems

Virginia Homes Building Systems
200 Custom Ave.
Middleburg, PA 17842
(888) 553-1414
www.virginiahomesbuildingsystems.com

DATE:	DRAWN BY:	STATUS:
6/23/22	CCW	PRODUCTION

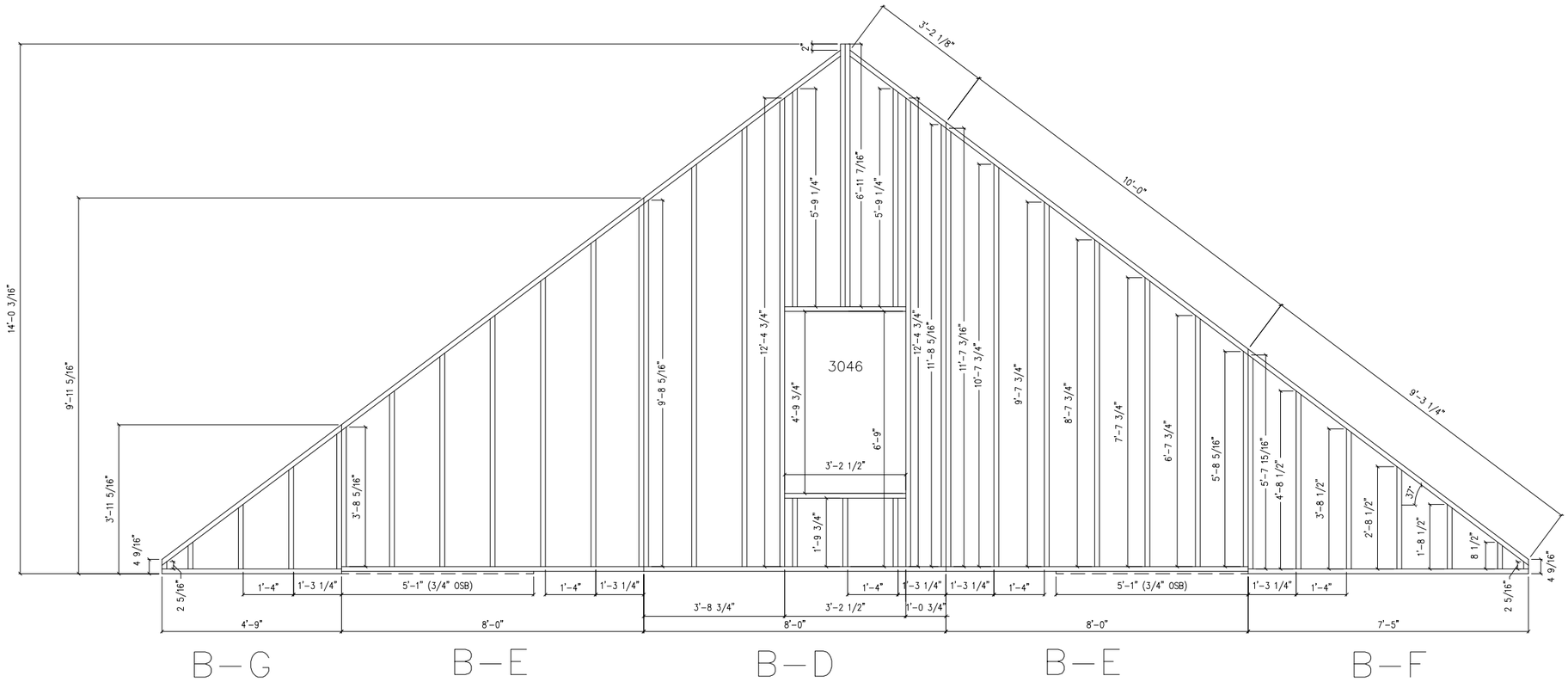

CHADK 7/8/2022 9:46:05 AM

BUILDER	CUSTOMER
REAL ESTATE by K LLC	LOT 3 – MODE

CITY	COUNTY	STATE
FREDERICKSBURG	SPOTSYLVANIA	VA

WIND SPEED	WIND LOAD	SNOW LOAD
115 MPH VULT		25

ORDER NO.	SERIAL NO.	FILE NO.
102709	17640	

4154–CBS CAPE
ENDWALL 16" O.C.

MBSP MODULAR BUILDING SYSTEMS OF PA

Virginia Homes Building Systems

Virginia Homes Building Systems
200 Custom Ave.
Middleburg, PA 17842
(888) 553-1414
www.virginiahomesbuildingsystems.com

DATE:	DRAWN BY:	STATUS:
6/23/22	CCW	PRODUCTION

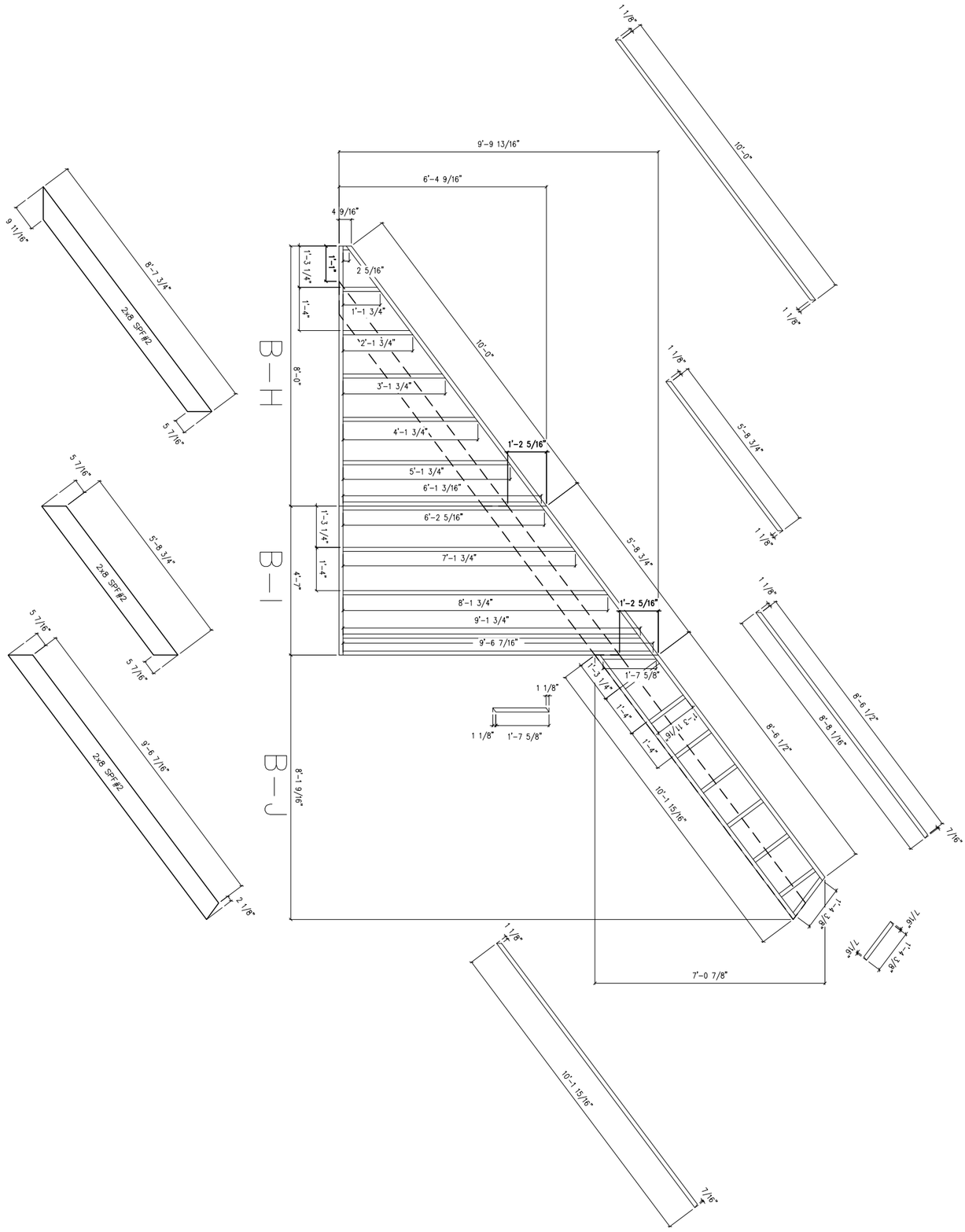

PAGE:	DATE:	DRAWN BY:	STATUS:
7 of 10	6/23/22	CCW	PRODUCTION

4154-CBS CAPE

MBSP MODULAR BUILDING SYSTEMS OF PA

Virginia Homes Building Systems
Virginia Homes Building Systems
200 Custom Ave.
Middleburg, PA 17842
(888) 553-1414
www.virginiahomesbuildingsystems.com

BUILDER		CUSTOMER
REAL ESTATE by K LLC		LOT 3 - MODE
CITY: FREDERICKSBURG	COUNTY: SPOTSYLVANIA	STATE: VA
WIND SPEED: 115 MPH VULT	WIND LOAD:	SNOW LOAD: 25
ORDER NO.: 102709	SERIAL NO.: 17640	FILE NO.:

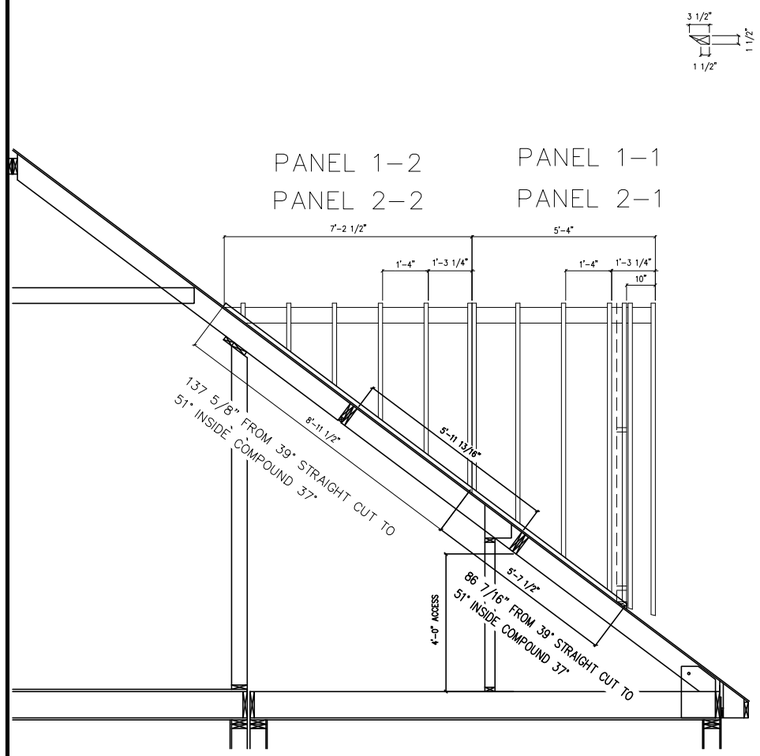

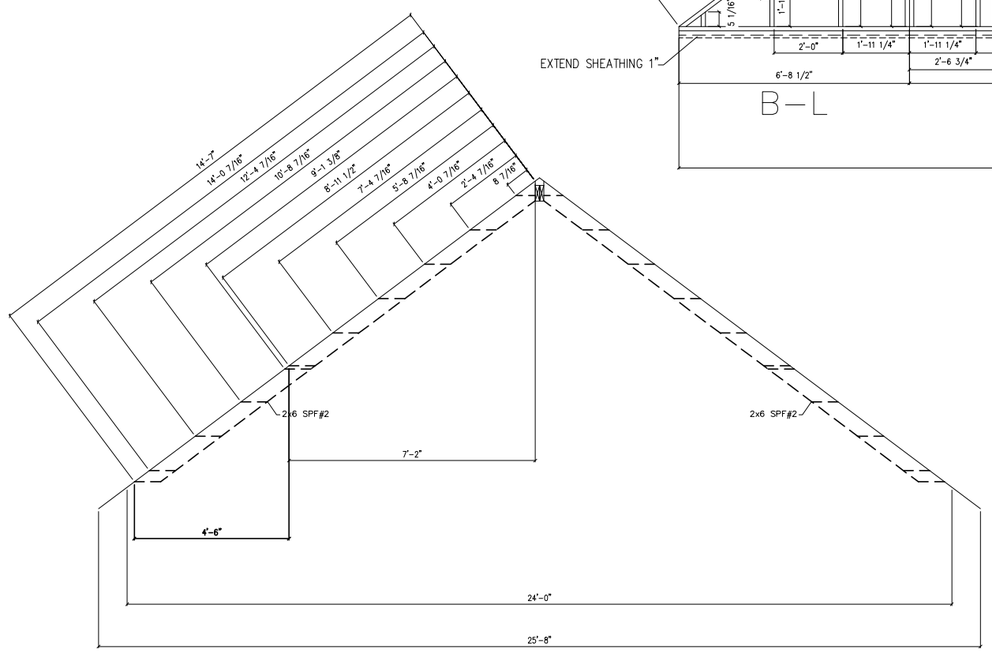

C–A

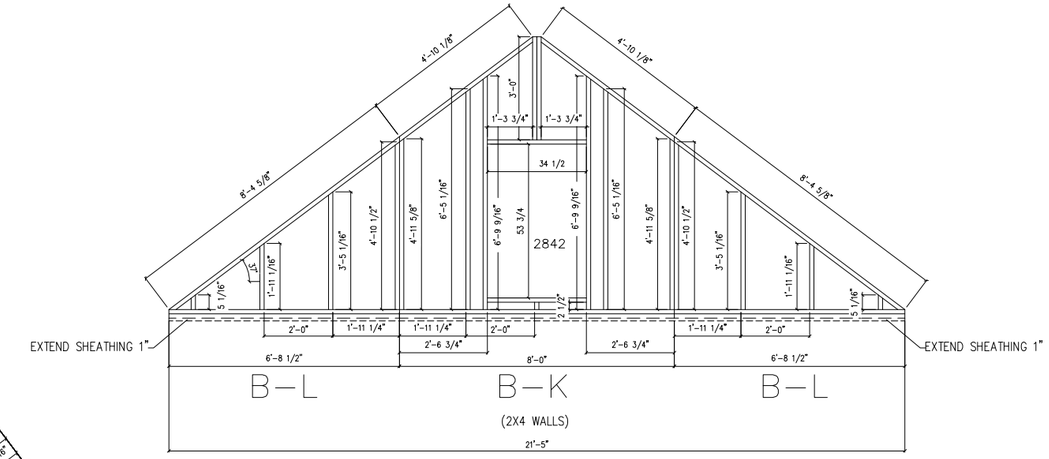

BUILDER	REAL ESTATE by K LLC
CUSTOMER	LOT 3 – MODE
CITY	FREDERICKSBURG
COUNTY	SPOTSYLVANIA
STATE	VA
WIND SPEED	115 MPH VULT
WIND LOAD	
SNOW LOAD	25
ORDER NO.	102709
SERIAL NO.	17640
FILE NO.	

4154–CBS CAPE
41'–3" WIDE 2x10 BOTTOMS

MBSP MODULAR BUILDING SYSTEMS OF PA
Virginia Homes Building Systems
Virginia Homes Building Systems
200 Custom Ave.
Middleburg, PA 17842
(888) 553-1414
www.virginiahomesbuildingsystems.com

DATE:	DRAWN BY:	STATUS:
6/23/22	CCW	PRODUCTION

NOTES: 1.
2.
3.
4.
5.
6.
7.
8.

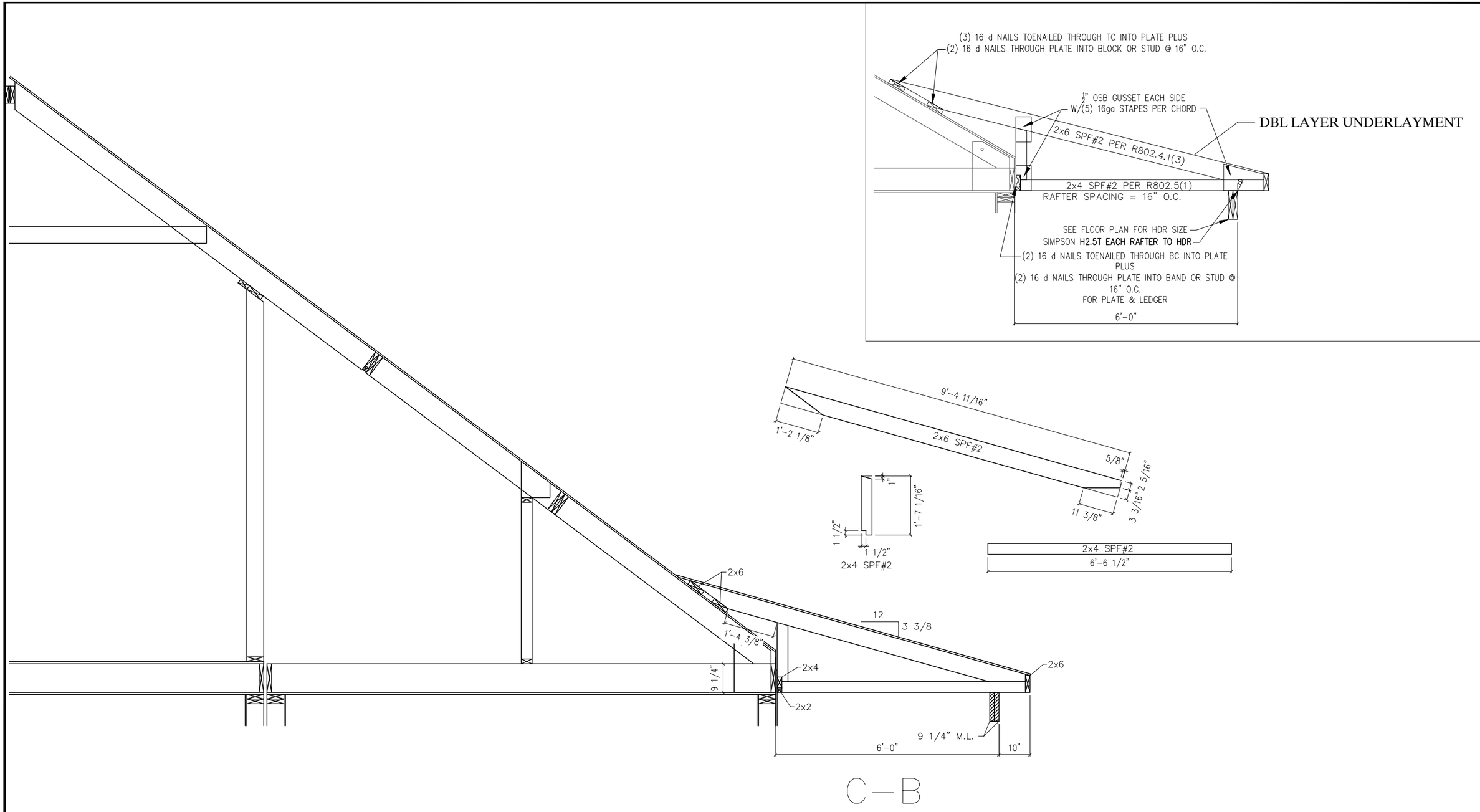

C—B

NOTES: 1.
2.
3.
4.
5.
6.
7.
8.

BUILDER	REAL ESTATE by K LLC
CUSTOMER	LOT 3 – MODE
CITY	FREDERICKSBURG
COUNTY	SPOTSYLVANIA
STATE	VA
WIND SPEED	115 MPH VULT
WIND LOAD	
SNOW LOAD	25
ORDER NO.	102709
SERIAL NO.	17640
FILE NO.	

4154–CBS CAPE
41'–3" WIDE 2x10 BOTTOMS

MBSP MODULAR BUILDING SYSTEMS OF PA

Virginia Homes Building Systems
Virginia Homes Building Systems
200 Custom Ave.
Middleburg, PA 17842
(888) 553-1414
www.virginiahomesbuildingsystems.com

STATUS:	PRODUCTION
DRAWN BY:	CCW
DATE:	6/23/22

PAGE: 7.6

CLOSE OFF PANEL

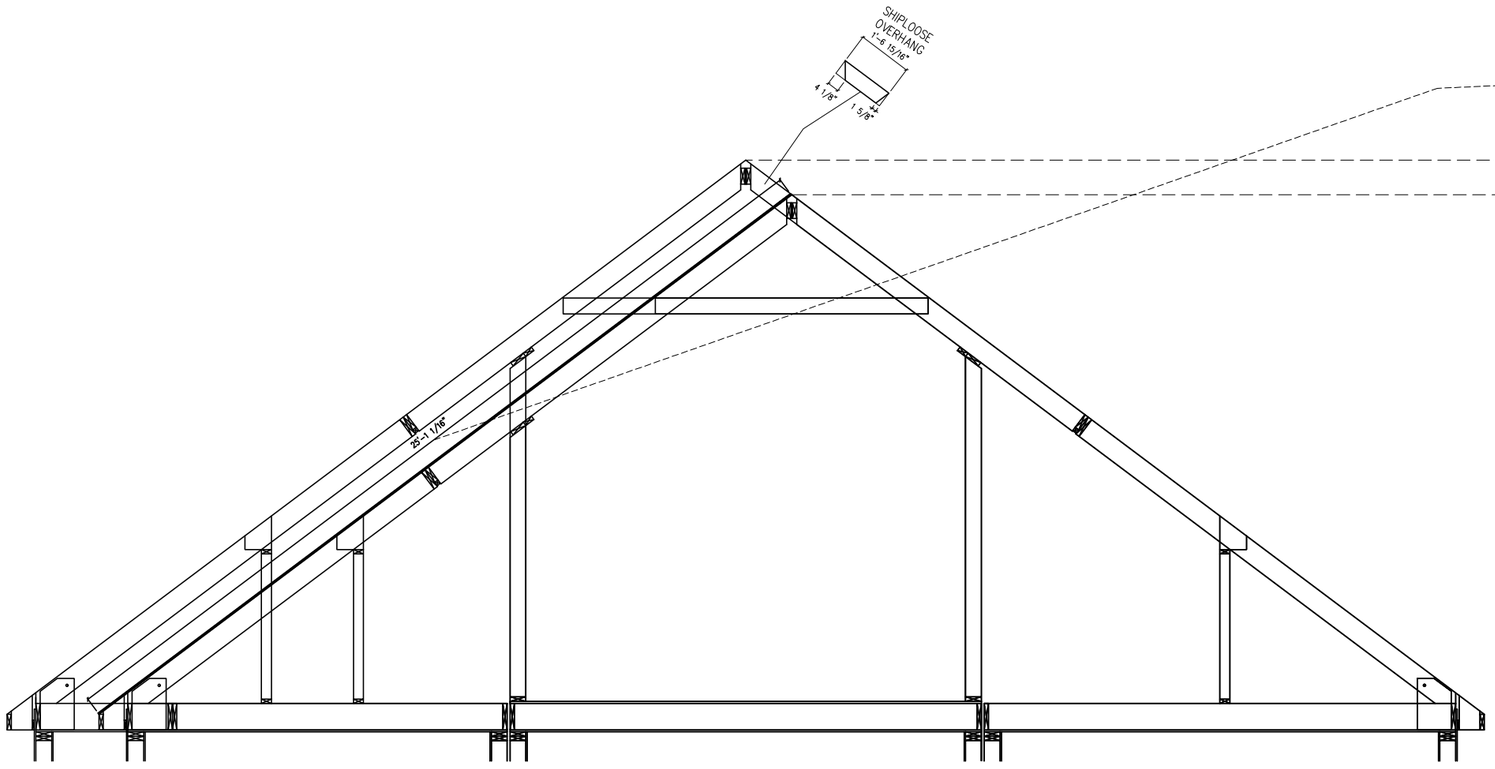

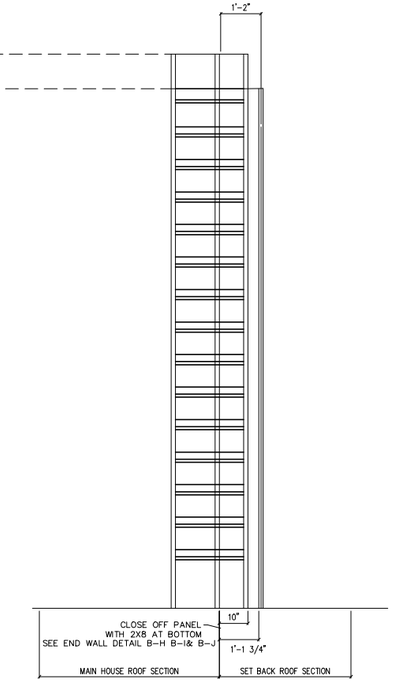

BUILDER	REAL ESTATE by K LLC
CUSTOMER	LOT 3 – MODE
CITY	FREDERICKSBURG
COUNTY	SPOTSYLVANIA
STATE	VA
WIND SPEED	115 MPH VULT
WIND LOAD	
SNOW LOAD	25
ORDER NO.	102709
SERIAL NO.	17640
FILE NO.	

4154–CBS CAPE

MBSP MODULAR BUILDING SYSTEMS OF PA

Virginia Homes Building Systems

Virginia Homes Building Systems
200 Custom Ave.
Middleburg, PA 17842
(888) 553-1414
www.virginiahomesbuildingsystems.com

DATE:	DRAWN BY:	STATUS:
6/23/22	CCW	PRODUCTION

CAPE CLOSE OFF

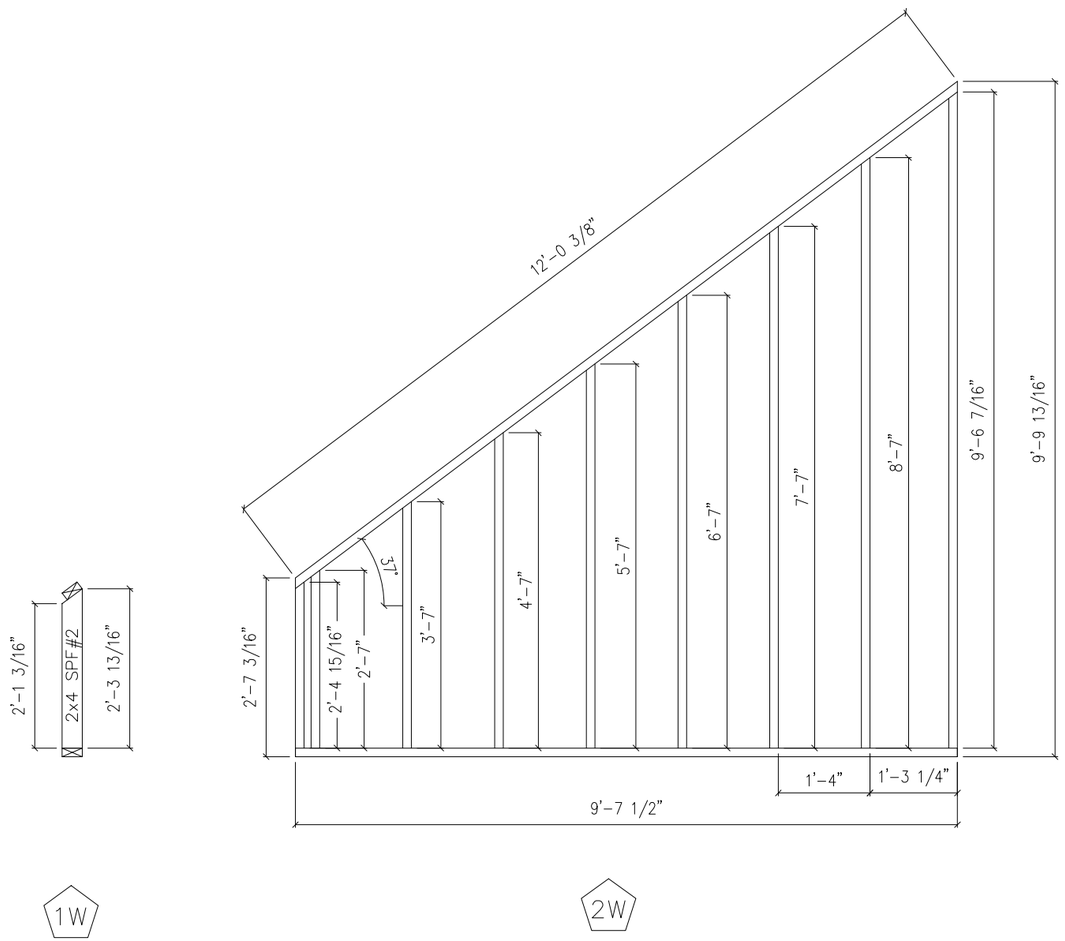

BUILD TO 3'-8"

BUILDER: REAL ESTATE by K LLC			CUSTOMER: LOT 3 – MODE
CITY: FREDERICKSBURG	COUNTY: SPOTSYLVANIA		STATE: VA
WIND SPEED: 115 MPH VULT	WIND LOAD		SNOW LOAD: 25
ORDER NO.: 102709	SERIAL NO.: 17640	FILE NO.	

4154–CBS CAPE

MBSP MODULAR BUILDING SYSTEMS OF PA

Virginia Homes Building Systems

Virginia Homes Building Systems
200 Custom Ave.
Middleburg, PA 17842
(888) 553-1414
www.virginiahomesbuildingsystems.com

DATE:	DRAWN BY:	STATUS:
6/23/22	CCW	PRODUCTION

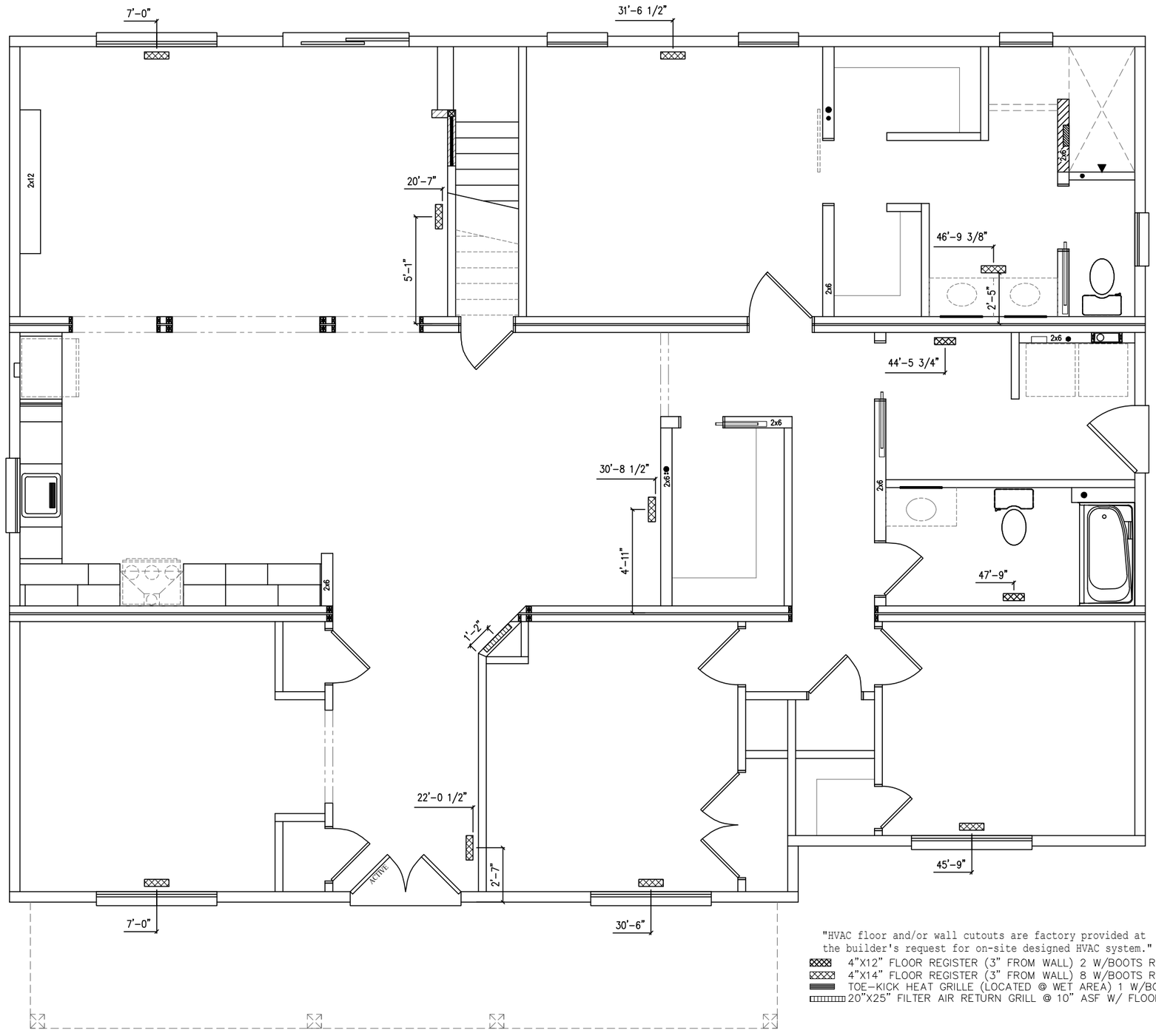

"HVAC floor and/or wall cutouts are factory provided at the builder's request for on-site designed HVAC system."

- 4"X12" FLOOR REGISTER (3" FROM WALL) 2 W/BOOTS REQUIRED
- 4"X14" FLOOR REGISTER (3" FROM WALL) 8 W/BOOTS REQUIRED
- TOE-KICK HEAT GRILLE (LOCATED @ WET AREA) 1 W/BOOTS REQUIRED
- 20"X25" FILTER AIR RETURN GRILL @ 10" ASF W/ FLOOR CUT OUT. 1 REQUIRED

CHADK 7/8/2022 9:43:35 AM

THIS PRINT HAS BEEN EXTRACTED FROM A SET OF A PREVIOUSLY APPROVED SYSTEM OR A MODEL APPROVAL AND IS ON FILE WITH STATE AND IS OK TO BE BUILT

X Scott Witmer

BUILDER	CUSTOMER
REAL ESTATE by K LLC	LOT 3 – MODE

CITY	COUNTY	STATE
FREDERICKSBURG	SPOTSYLVANIA	VA

WIND SPEED	SNOW LOAD	SQ. FT.
115 MPH VULT	25	2179

ORDER NO.	SERIAL NO.	FILE NO.
102709	17640	P102709(660)

4154–CBS CAPE
1ST STORY HEAT

MBSP MODULAR BUILDING SYSTEMS OF PA

Virginia Homes Building Systems
Virginia Homes Building Systems
200 Custom Ave.
Middleburg, PA 17842
(888) 553-1414
www.virginiahomesbuildingsystems.com

DATE:	DRAWN BY:	STATUS:
10/12/21	CAP	CONFO
11/10/2021	CLP	REV CONFO
03/11/2022	BLF	FINAL
3/25/22	CAP	PA
4/8/22	CAP	PURCHASING
4/12/2022	COB	APPROVAL
6/22/22	CDK	PRODUCTION

PAGE: 10.1

Door And Window Schedule

TYPE	QTY	DESCRIPTION	RO	DIAG	SQFT	LIGHT	VENT	U	DP	SHGC	EGRESS
Exterior Door	1	A PlastPro 3068 Glass (Under 50% Glazing)	38 1/2"x82 1/2"	91"	22.06	5.15	19.7	0.21	70		X
Exterior Door	1	Q 7-D 6'-0" Sliding Patio Door	71 3/4"x80 1/4"	107 5/8"	39.99	32.4	16.6	0.28	50	0.38	X
Exterior Door	1	SP PLASTPRO Double 2'-6" Ext. Door	63 1/4"x82 1/2"	104"	36.24	9.74	34.02	0.27		0.01	X
Interior Door	1	(3068) Interior Barn Door Rough Opening Only	38 1/4"x82 3/4"	91 1/8"	21.98	0	0	0			
Interior Door	13	(2668) Interior Swing Door	32 1/4"x82 3/4"	88 3/4"	18.53	0	0	0.52			
Interior Door	1	(3068) Interior POCKET Door	38 1/4"x82 3/4"	91 1/8"	21.98	0	0	0.52			
Interior Door	1	(2068) Interior Pocket Door	26 1/4"x82 3/4"	86 7/8"	15.08	0	0	0			
Interior Door	1	(2868) Interior Pocket Door	34 1/4"x82 3/4"	89 1/2"	0	0	0	0			
Interior Door	2	(2868) Interior Swing Door	34 1/4"x82 3/4"	89 1/2"	19.68	0	0	0.52			
Interior Door	1	(2068) Interior Swing Door	26 1/4"x82 3/4"	86 7/8"	0	0	0	0			
Interior Door	1	(3068) Interior Swing Door	38 1/4"x82 3/4"	91 1/8"	21.98	0	0	0.52			
Window	1	SP MW Brick Mould Double Hung 3432	42 3/8"x41 5/8"	59 3/8"	12.25	8.3	4.1	0.3	50	0.27	
Window	1	2 MW Brick Mould Double Hung 2842	34 3/8"x53 5/8"	63 3/4"	12.8	8.7	4.5	0.3	50	0.27	
Window	3	5 MW Brick Mould Double Hung Twin 2856-E	68 3/4"x69 5/8"	97 7/8"	33.24	23.4	12.2	0.3	50	0.27	X
Window	2	3 MW Brick Mould Double Hung 3046	38 3/8"x57 5/8"	69 1/4"	15.36	10.8	5.76	0.3	50	0.27	X
Window	2	1 MW Brick Mould Double Hung 24210	30 3/8"x37 5/8"	48 3/8"	7.94	4.8	2.5	0.3	50	0.27	
Window	2	4 MW Brick Mould Double Hung 2852	34 3/8"x65 5/8"	74 1/8"	15.67	11.5	5.8	0.3	50	0.27	X
Window	1	4 MW Brick Mould Double Hung Twin 2852	68 3/4"x65 5/8"	95"	31.34	23	11.6	0.3	50	0.27	X

CHADK 7/8/2022 9:43:35 AM

THIS PRINT HAS BEEN EXTRACTED FROM A SET OF A PREVIOUSLY APPROVED SYSTEM OR A MODEL APPROVAL AND IS ON FILE WITH STATE AND IS OK TO BE BUILT

X Scott Witmer

BUILDER: REAL ESTATE by K LLC
CUSTOMER: LOT 3 - MODE
CITY: FREDERICKSBURG
COUNTY: SPOTSYLVANIA
STATE: VA
WIND SPEED: 115 MPH VULT
SNOW LOAD: 25
SQ. FT.: 2179
ORDER NO.: 102709
SERIAL NO.: 17640
FILE NO.: P102709(660)

4154-CBS CAPE
DOOR & WINDOW SCHEDULES

Virginia Homes Building Systems
Virginia Homes Building Systems
200 Custom Ave.
Middleburg, PA 17842
(888) 553-1414
www.virginiahomesbuildingsystems.com

DATE:	DRAWN BY:	STATUS:
10/12/21	CAP	CONFO
11/10/2021	CLP	REV CONFO
03/11/2022	BLF	FINAL
3/25/22	CAP	PA
4/8/22	CAP	PURCHASING
4/12/2022	COB	APPROVAL
6/22/22	CDK	PRODUCTION

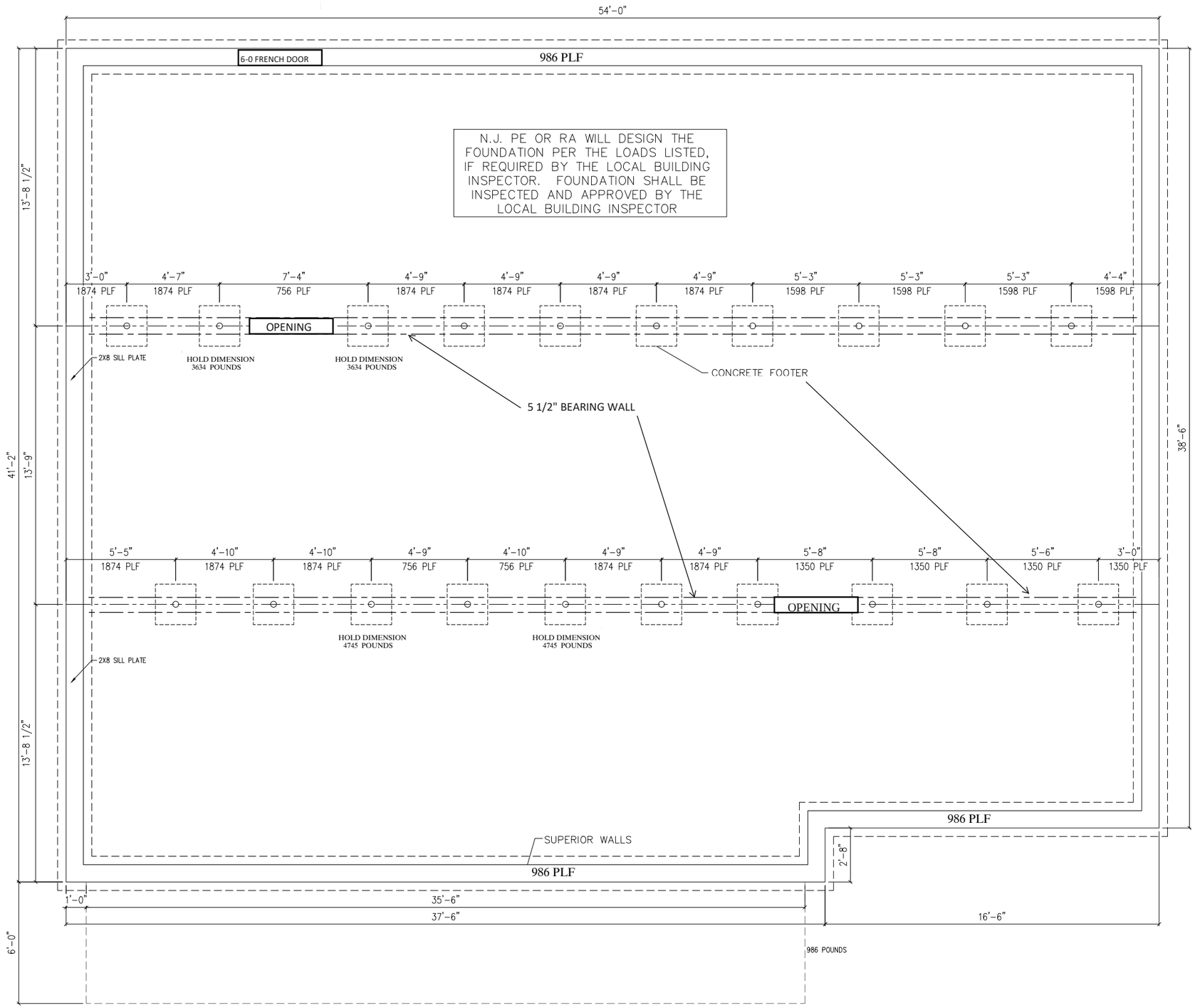

CHADK 7/8/2022 9:43:35 AM

NOTES:
1. PERIMETER RAIL ATTACHED TO SILL WITH 16d. NAILS AT 6" O.C.
2. PIER FOOTINGS BASED UPON 2000 PSF. ALLOWABLE SOIL BEARING PRESSURE
3. CONCRETE COMPRESSIVE STRENGTH: 3000 PSI
4. M OR S TYPE MORTAR TO BE USED
5. MAX. ANCHOR BOLT SPACING: 6'-0" O.C. (4'-0" O.C. MAX. IN AREAS WHERE WIND VELOCITY IS @ OR EXCEEDS 100 MPH)
6. WINDOWS OR VENTS (INSTALLED BY BLDR) ARE REQ'D. TO PROVIDE 1/150 OF FLOOR AREA AS ATTIC VENTS AND SHALL BE LOCATED AS CLOSE TO CORNERS AS POSSIBLE.

THIS PRINT HAS BEEN EXTRACTED FROM A SET OF A PREVIOUSLY APPROVED SYSTEM OR A MODEL APPROVAL AND IS ON FILE WITH STATE AND IS OK TO BE BUILT

X Scott Witmer

BUILDER	CUSTOMER
REAL ESTATE by K LLC	LOT 3 – MODE

CITY	COUNTY	STATE
FREDERICKSBURG	SPOTSYLVANIA	VA

WIND SPEED	SNOW LOAD	SQ. FT.
115 MPH VULT	25	2179

ORDER NO.	SERIAL NO.	FILE NO.
102709	17640	P102709(660)

4154–CBS CAPE
FOUNDATION PLAN

Virginia Homes Building Systems
Virginia Homes Building Systems
200 Custom Ave.
Middleburg, PA 17842
(888) 553-1414
www.virginiahomesbuildingsystems.com
MBSP MODULAR BUILDING SYSTEMS OF PA

DATE:	DRAWN BY:	STATUS:
10/12/21	CAP	CONFO
11/10/2021	CLP	REV CONFO
03/11/2022	BLF	FINAL
3/25/22	CAP	PA
4/8/22	CAP	PURCHASING
4/12/2022	COB	APPROVAL
6/22/22	CDK	PRODUCTION

PAGE: 5

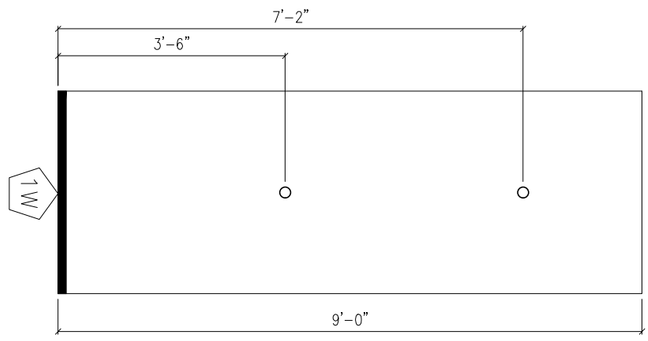

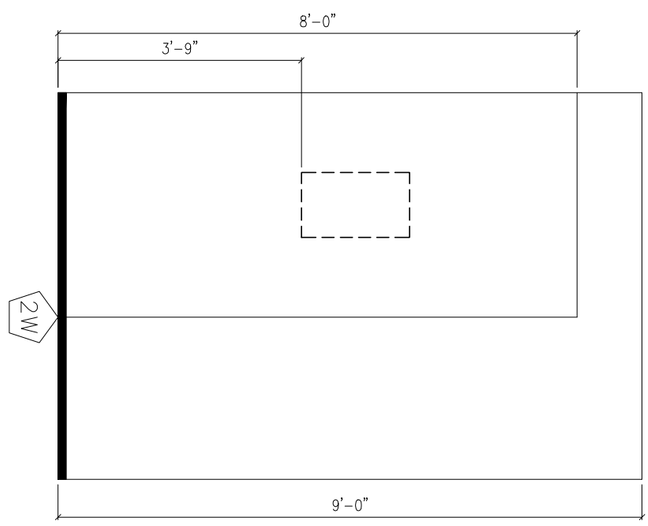

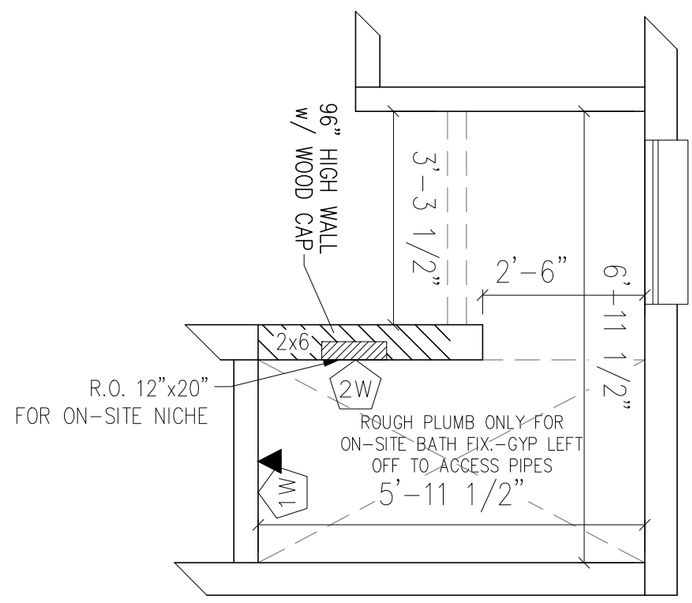

PAGE:	DATE:	DRAWN BY:	STATUS:
13.2	03/11/2022	BLF	FINAL
	3/25/22	CAP	PA

4154-CBS CAPE
MISC. DETAILS

MBSP MODULAR BUILDING SYSTEMS OF PA

Virginia Homes Building Systems
Virginia Homes Building Systems
200 Custom Ave.
Middleburg, PA 17842
(888) 553-1414
www.virginiahomesbuildingsystems.com

BUILDER		CUSTOMER
REAL ESTATE by K LLC		LOT 3 – MODE
CITY: FREDERICKSBURG	COUNTY: SPOTSYLVANIA	STATE: VA
WIND SPEED: 115 MPH VULT	SNOW LOAD: 25	SQ. FT.: 2179
ORDER NO.: 102709	SERIAL NO.: 17640	FILE NO.: P102709(660)

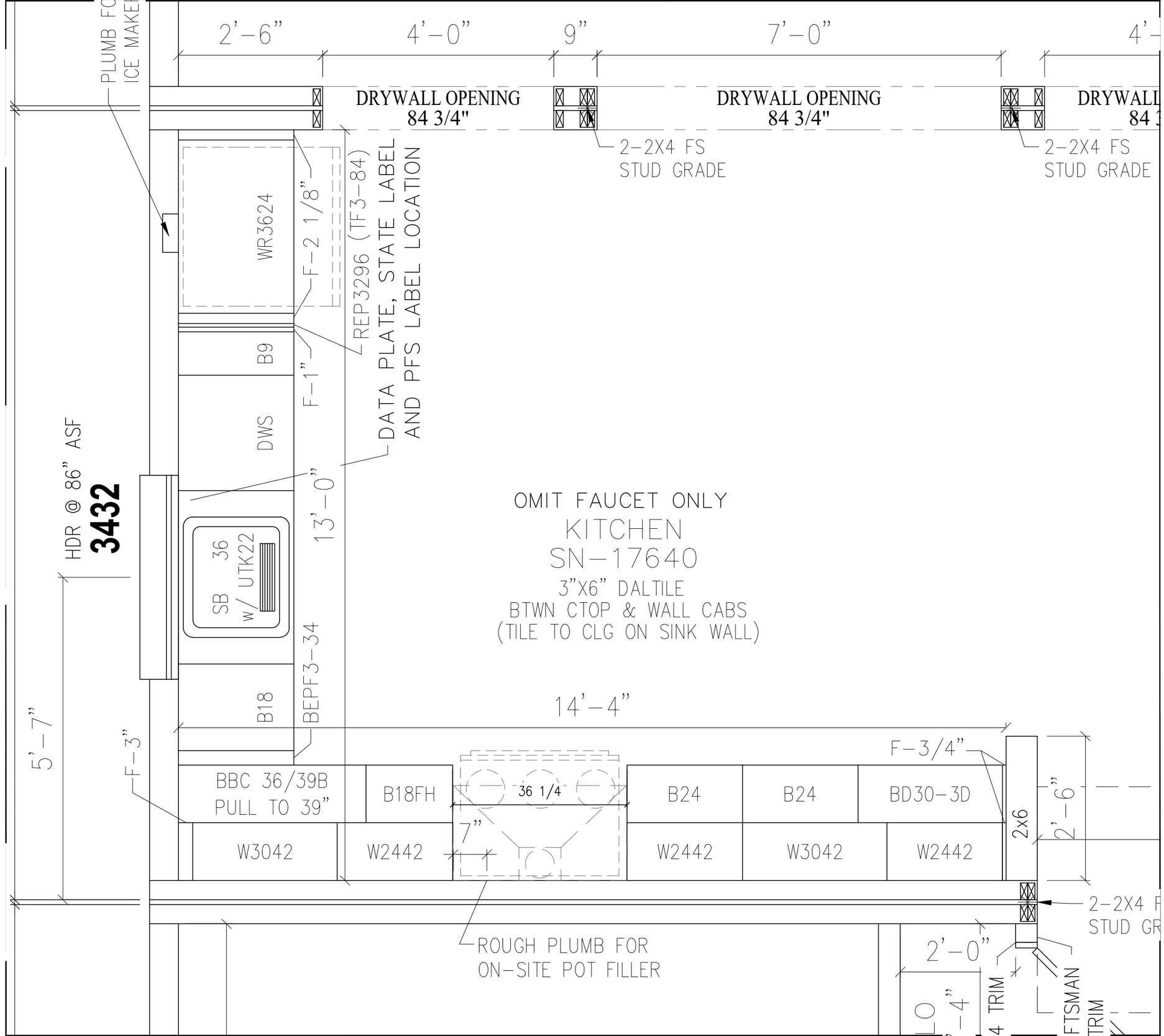
PLUMB FO
ICE MAKE
2'-6"
4'-0"
9"
7'-0"
4'-
DRYWALL OPENING
84 3/4"
DRYWALL OPENING
84 3/4"
DRYWALL
84 3
2-2X4 FS
STUD GRADE
2-2X4 FS
STUD GRADE
WR3624
F-2 1/8"
REP3296 (TF3-84)
DATA PLATE, STATE LABEL
AND PFS LABEL LOCATION
B9
F-1"
DWS
13'-0"
HDR @ 86" ASF
3432
SB 36
w/ UTK22
BEPF3-34
B18
OMIT FAUCET ONLY
KITCHEN
SN-17640
3"X6" DALTILE
BTWN CTOP & WALL CABS
(TILE TO CLG ON SINK WALL)
14'-4"
5'-7"
F-3"
F-3/4"
BBC 36/39B
PULL TO 39"
B18FH
36 1/4
B24
B24
BD30-3D
2x6
2'-6"
7"
W3042
W2442
W2442
W3042
W2442
2-2X4 F
STUD GR
ROUGH PLUMB FOR
ON-SITE POT FILLER
2'-0"
LO
'-4"
4 TRIM
FTSMAN
TRIM

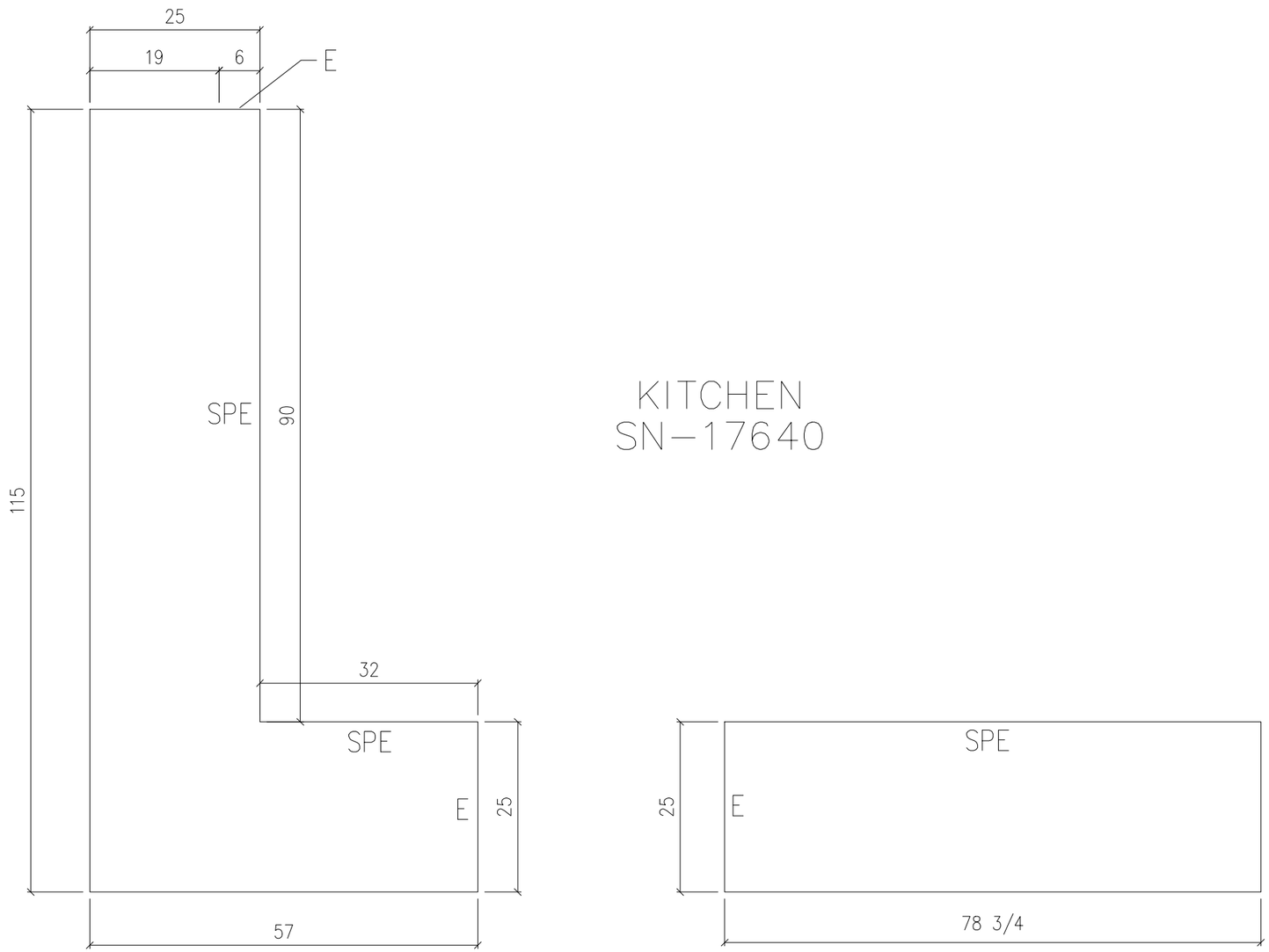

KITCHEN
SN-17640

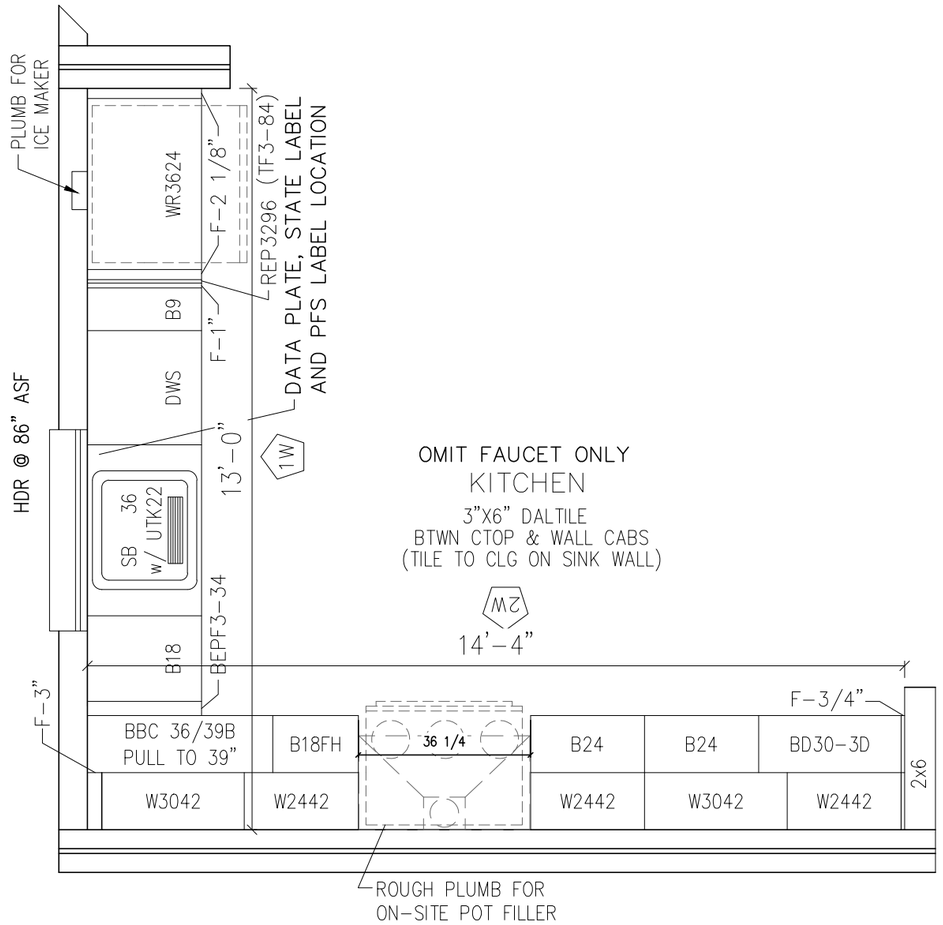

SHIPLOOSE CROWN THIS SECTION

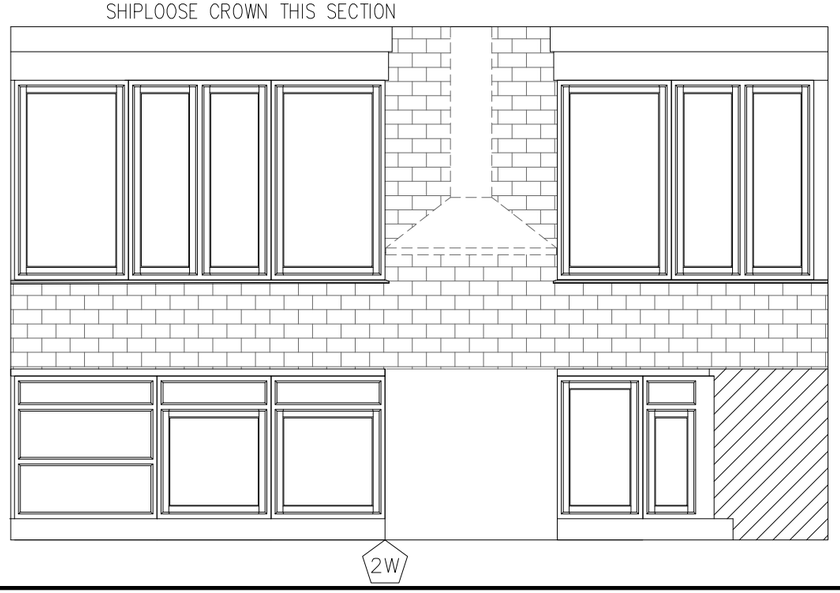

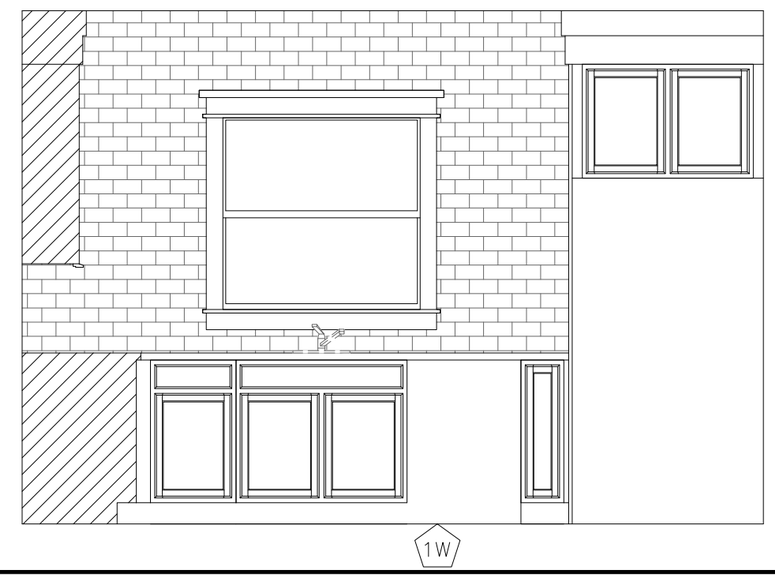

BUILDER	CUSTOMER
REAL ESTATE by K LLC	LOT 3 – MODE

CITY	COUNTY	STATE
FREDERICKSBURG	SPOTSYLVANIA	VA

WIND SPEED	SNOW LOAD	SQ. FT.
115 MPH VULT	25	2179

ORDER NO.	SERIAL NO.	FILE NO.
102709	17640	P102709(660)

4154–CBS CAPE
MISC. DETAILS

MBSP MODULAR BUILDING SYSTEMS OF PA

Virginia Homes Building Systems
Virginia Homes Building Systems
200 Custom Ave.
Middleburg, PA 17842
(888) 553-1414
www.virginiahomesbuildingsystems.com

DATE:	DRAWN BY:	STATUS:
03/11/2022	BLF	FINAL
3/25/22	CAP	PA

PAGE: 13.3