※To prevent irregular winding of the wire rope around the drum,
keep the fleet angle 2 degrees or less.
Please install the pulley 7ft or more away from the drum
on the center line of the drum.
※The value of specified "Wire Rope Tension" on this drawing is for
the standard layer or less.
The value of the "Wire Rope Tension" must be decreased accordance
with the ratio of the actual winding layers, if it exceeded.

Specifications

(The wire rope composition is a manufacturer recommendation.)

Load Rating Wire Rope Tension	1,100 lbs(=500 kgf) 5th Layer(Standard Layer)	Handle Force	Handle Length 9 27/32"	Number of Wire Rope Winding Layer 1st Layer 24.5lbs(=11.1kgf) 3rd Layer 31.7lbs(=14.4kgf) 5th Layer 39.0lbs(=17.7kgf)
Drum Capacity	Wire Rope 6-Layer Windings φ1/4"(6×36)×131 ft		Wire Rope Tension 1,100lbs	
Gear Ratio	1/8.9	Standard Accesories		One Handle
Effective Handle Length	9 27/32"(Maximum)			One Hex Wrench for Anchoring the Wire Rope
Weight	34.4 lbs(Winch+Handle)	Painting		

[Material of the main part of the winch (JIS)]

Gear case, Gear case cover, Side frame, Drum, Bed plate, Clutch cover, Handle arm	SUS304
Drum shuft, Clutch pinion	SUS304
Main gear, Pinion gear	SCM415
Spur gear	S25C
Bolts/Nuts, Retaining rings, Springs, etc.	SUS304
Ball bearings	SUS440C
Clutch	CAC403
Mechanical brake parts except clutch	SUS303 SUS304 SUS420J2

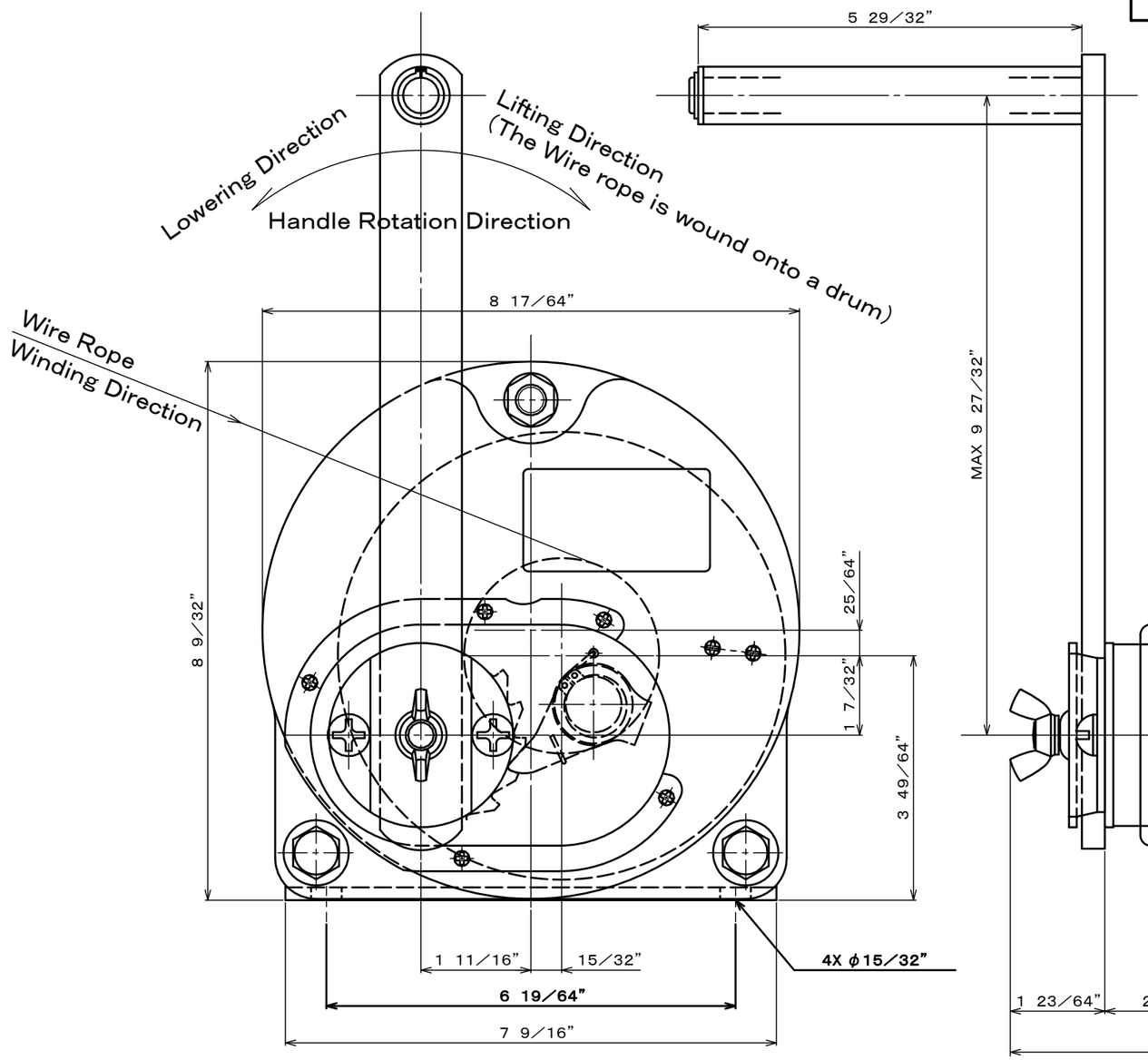

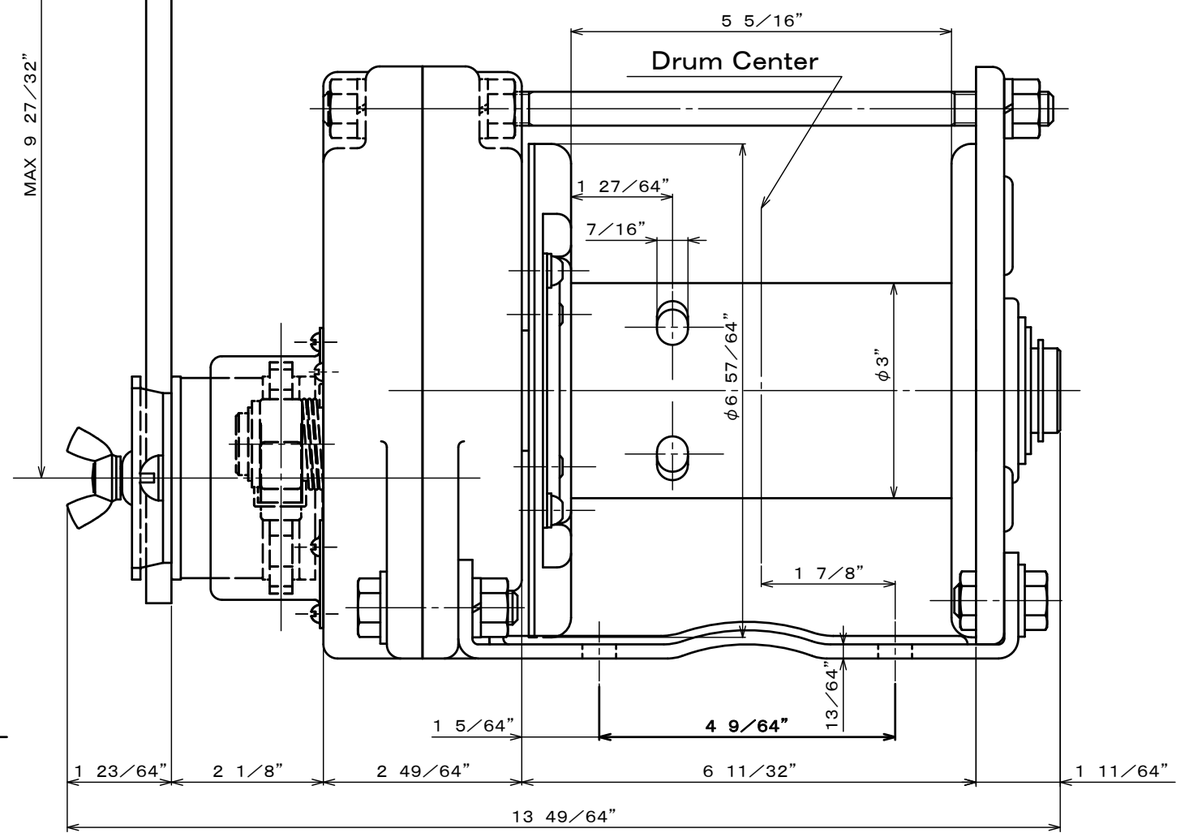

4 ×			
3 ×			
2 ×			
1 ×			
改訂/REVISION			

図面番号/DRAWING No. ESB5SI-180402-01U
改訂番号 REVISION No. 00
お客様/CUSTOMER

承認/APPROVED 設計部 '18.04.06 米澤
検図/CHECKED 設計部 '18.04.06 松嶺
作成/DRAWN 設計部 '18.04.06 武松

図面名/TITLE
MAXPULL STAINLESS STEEL WINCH
(ELECTROPOLISHING)
STOPPER ARMLESS ROTATING
MODEL ESB-5-SI

符号 MARK	項目 PARTICULARS	材料 MATERIAL	数量 QTY	単体 PER ONE / 合計 TOTAL 重量(kg) WEIGHT	備考 REMARKS

投影法/PROJECTION METHOD 第三角法 THIRD ANGLE PROJECTION
尺度/SCALE :
台数/QTY

MAXPULL MACHINERY & ENGINEERING CO.,LTD.
マックスプル工業株式会社