Radio Interface Cable

For NCS-C250 Mobile Multi-Switcher

NCS Model Number

NCS-250-ICM-XX

Compatible Radios:

IC-A110

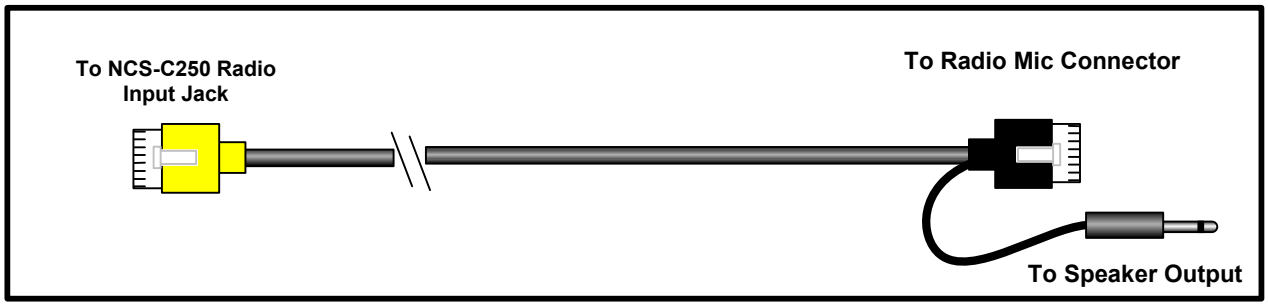

RJ-45

Pin #	Wire Color	Function
1	White	Mic Hi
2	Green	Mic Lo
3	Brown	PTT
4	Black	Ground
5	Yellow	Rx Audio
6	Shield	Ground
7	Red	Hook Sw*
8	Orange	COR**

***Active only if Switch Hook Option installed.**

**** COR Connection not available on this radio**

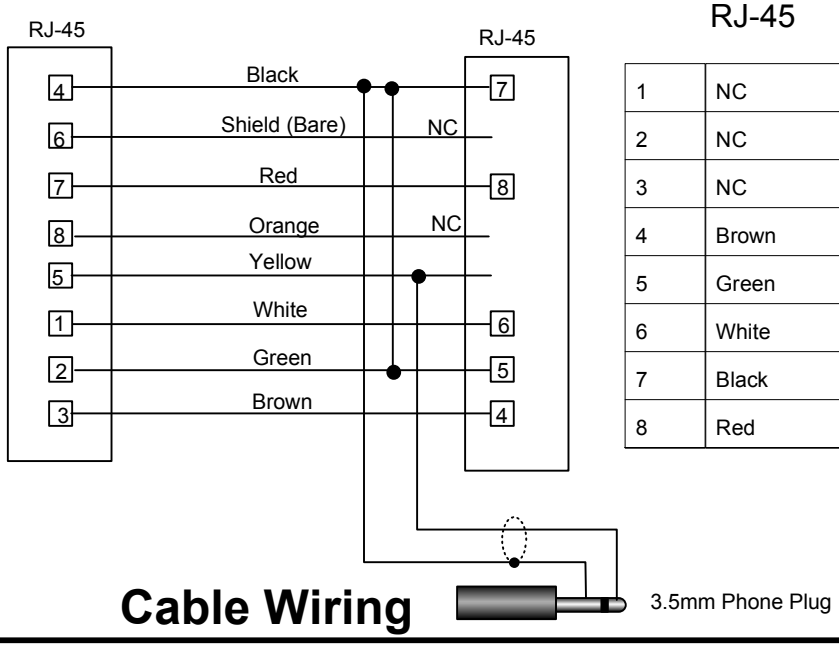

RJ-45

1	NC
2	NC
3	NC
4	Brown
5	Green
6	White
7	Black
8	Red

Cable Wiring

Revision C
8/5/15