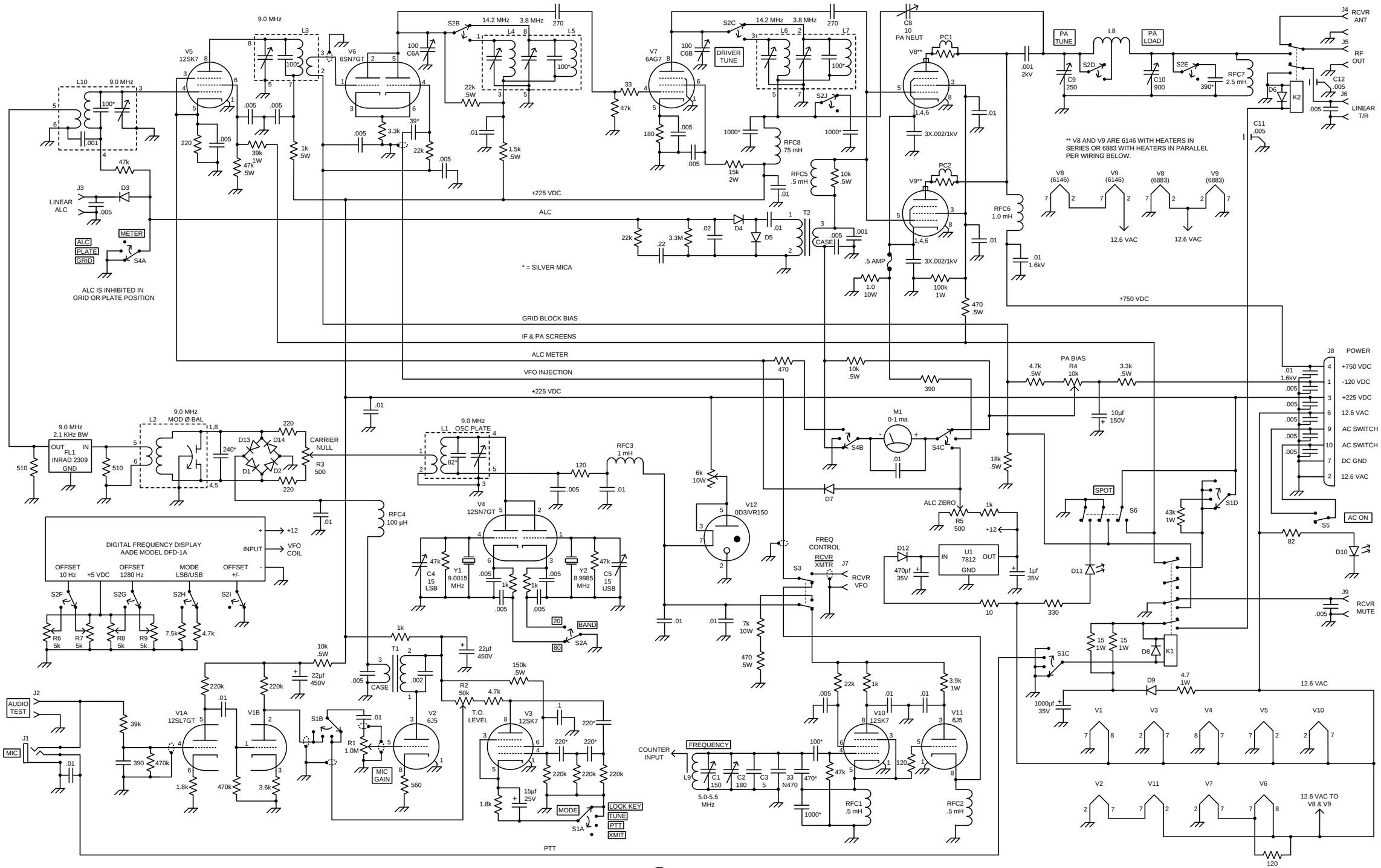
V5 12SK7
V6 6SN7GT
V7 6AG7
V8* V9* PC1 PC2
V10 12SK7
V11 6J5
V12 0D3/VR150
V1A 12SL7GT
V1B
V2 6J5
V3 12SK7
V4 12SN7GT
L1 OSC PLATE
L2 MOD Ø BAL
L3
L4 L5 L6 L7 L8 L9 L10
FL1 INRAD 2309
9.0 MHz 2.1 KHz BW
DIGITAL FREQUENCY DISPLAY AADE MODEL DFD-1A
OFFSET 10 Hz
+5 VDC
OFFSET 1280 Hz
MODE LSB/USB
OFFSET +/-
INPUT
VFO COIL
+12
S2F S2G S2H S2I
R6 5k R7 5k R8 5k R9 5k
7.5k 4.7k
Y1 9.0015 MHz
Y2 8.9985 MHz
C4 15 LSB
C5 15 USB
BAND
20
80
S2A
S2B S2C S2J
14.2 MHz 3.8 MHz
DRIVER TUNE
PA TUNE
PA LOAD
C8 10 PA NEUT
C9 250
C10 900
C11 .005
C12 .005
RFC7 2.5 mH
RFC8 .75 mH
RFC5 .5 mH
RFC6 1.0 mH
RFC1 .5 mH
RFC2 .5 mH
RFC3 1 mH
RFC4 100 µH
T1
T2
CASE
J4 RCVR ANT
J5 RF OUT
J6 LINEAR T/R
K2
D6
** V8 AND V9 ARE 6146 WITH HEATERS IN SERIES OR 6883 WITH HEATERS IN PARALLEL PER WIRING BELOW.
V8 (6146) V9 (6146) V8 (6883) V9 (6883)
12.6 VAC
J3 LINEAR ALC
D3
METER
ALC PLATE GRID
S4A
ALC IS INHIBITED IN GRID OR PLATE POSITION
* = SILVER MICA
+225 VDC
ALC
GRID BLOCK BIAS
IF & PA SCREENS
ALC METER
VFO INJECTION
+750 VDC
.5 AMP
M1 0-1 ma
S4B S4C
PA BIAS R4 10k
4.7k .5W
3.3k .5W
10µf 150V
ALC ZERO R5 500
D7
D12
470µf 35V
U1 7812
IN OUT GND
1µf 35V
SPOT
S6
S1D
43k 1W
D11
D8 K1
S1C
15 1W
D9 4.7 1W
1000µf 35V
12.6 VAC
V1 V3 V4 V5 V10
V2 V11 V7 V6
12.6 VAC TO V8 & V9
120 2W
J8 POWER
+750 VDC
-120 VDC
+225 VDC
12.6 VAC
AC SWITCH
AC SWITCH
DC GND
12.6 VAC
S5
AC ON
D10
J9 RCVR MUTE
FREQ CONTROL
RCVR XMTR
J7
RCVR VFO
S3
COUNTER INPUT
FREQUENCY
C1 150
C2 180
C3 5
33 N470
5.0-5.5 MHz
J2 AUDIO TEST
J1 MIC
S1B
R1 1.0M
MIC GAIN
R2 50k
T.O. LEVEL
MODE
LOCK KEY
TUNE
PTT
XMIT
S1A
PTT
CARRIER NULL
R3 500
R2 50k
R4 10k
R5 500
CTALMANIA
HOMEBREW SSB TRANSMITTER BY KG7TR
REVISION: 22 JUL 2019

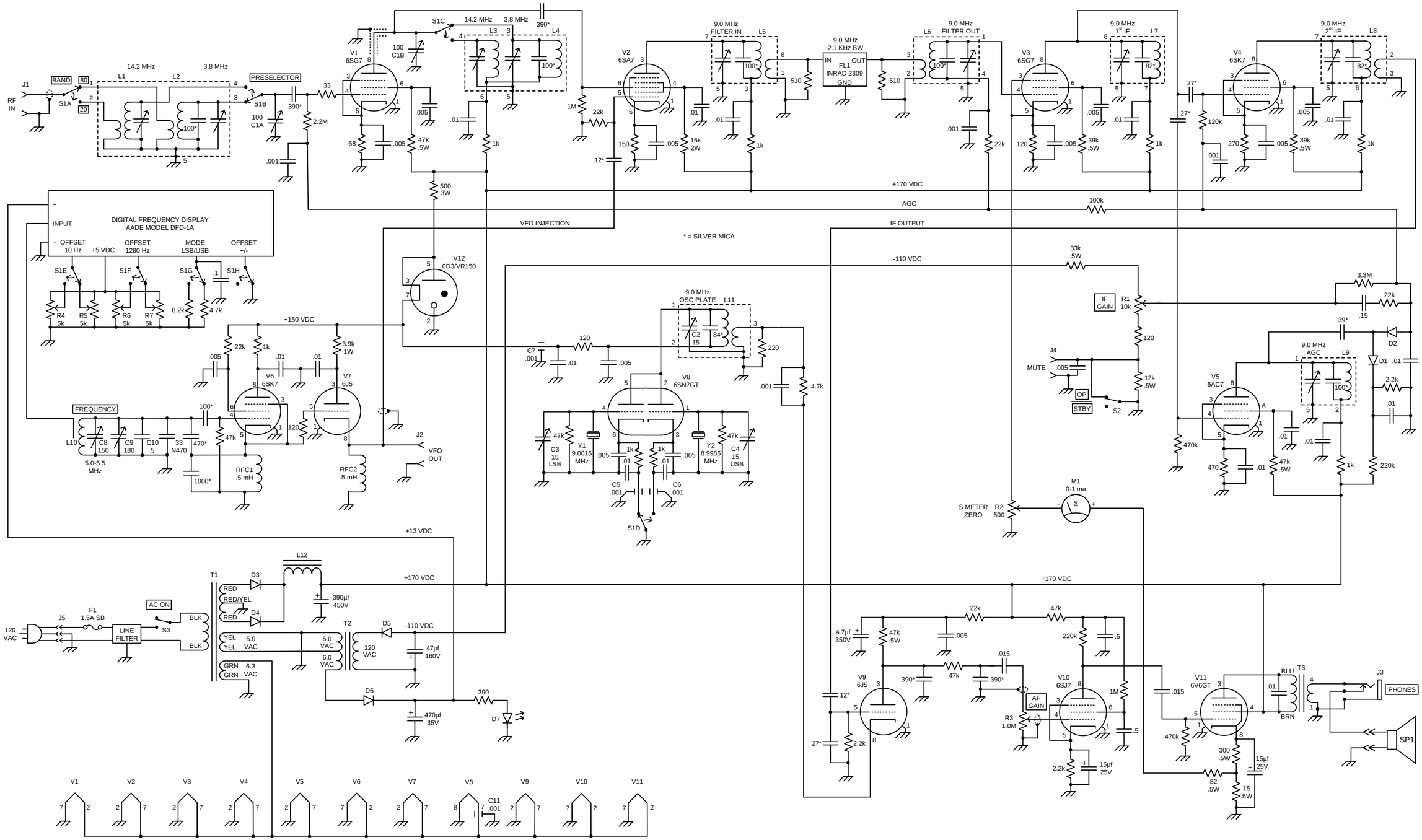

OCTALMANIA
HOMEBREW SSB RECEIVER BY KG7TR

REVISION: 2 APR 2015

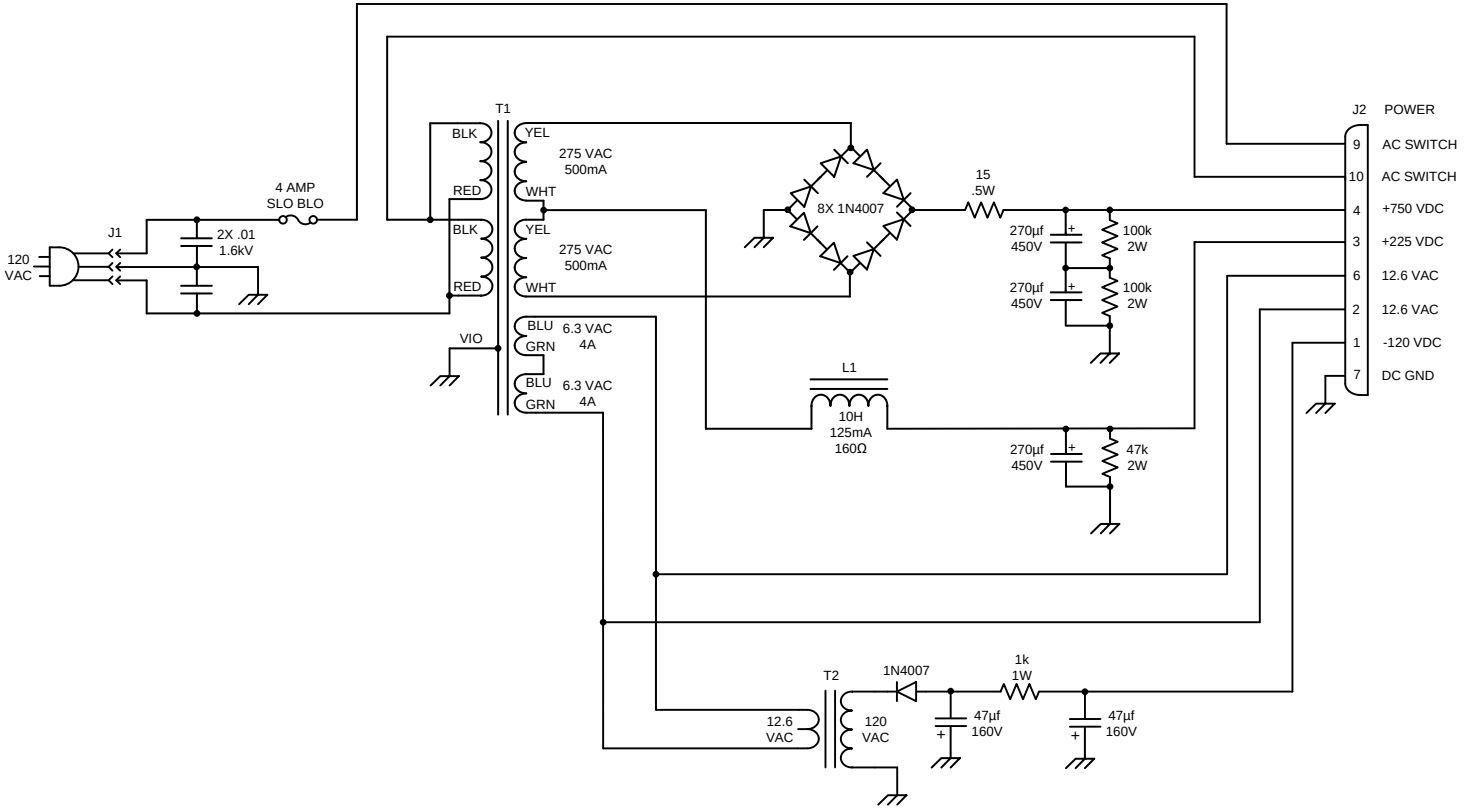

OCTALMANIA

HOMEBREW
POWER SUPPLY
BY KG7TR

REVISION: 22 JUL 2019