KIRSCH®
DRAPERY HARDWARE

Wood Trends™

2025 Brochure

EXCEPTIONALLY CRAFTED

WOOD TRENDS: A LESSON IN CLASSIC COMPOSURE

Real wood pieces stained or painted in an array of finishes.

Classic forms add a subtle touch of elegance and tradition.

Expertly crafted styles for an updated look on old classics.

We built a solid foundation that is full of classic forms and a strong heritage of quality to bring you our Wood Trends Collection. We brought tradition and character together to create a refined blend of everything you've been dreaming of. Get into your comfort zone with our Wood Trends Collection.

CONTENTS

06 Overview

08 1⅜" Finials & Components

23 2" Finials & Components

35 Accessories & Components

36 Helpful Guides

- 36 AMP™ Motorization
- 38 Estate™ Overview
- 40 Bracket Spacing & Mount Option
- 44 Calculating Drapery Weight
- 45 Stack Guides
- 52 Pole Installation, Cutting & Splicing
- 53 Wood Elbow Configuration
- 54 Complete Collection Overview

56 Index

COLLECTION OVERVIEW

9 **FINISHES**
Wood stains and neutral paints

2 **VERSATILE SIZES**
1⅜" & 2"

2 **ESTATE™ TRAVERSE ROD SIZES**
1⅜" & 2"

1 **EXPERTLY CRAFTED COLLECTION**

ARCHITRAC™ K-RAIL COMPATIBLE
1⅜" finials only

AMP™ MOTORIZATION COMPATIBLE
Estate™ Traverse Rods only

1 Marble
2 Coffee
3 Dark Chocolate
4 Truffle

1
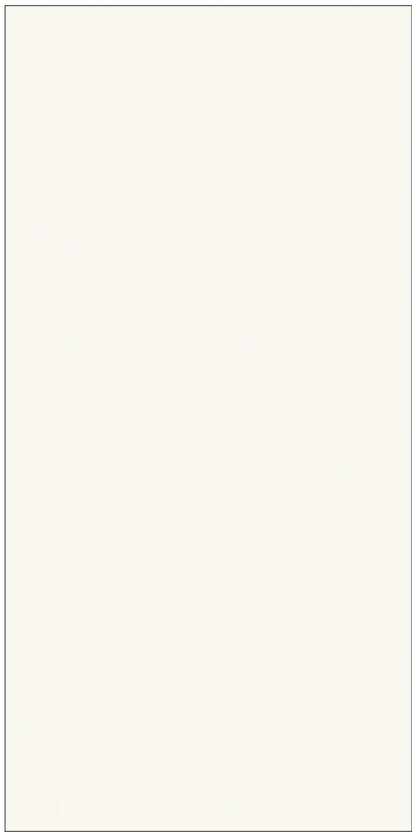

2

3

4
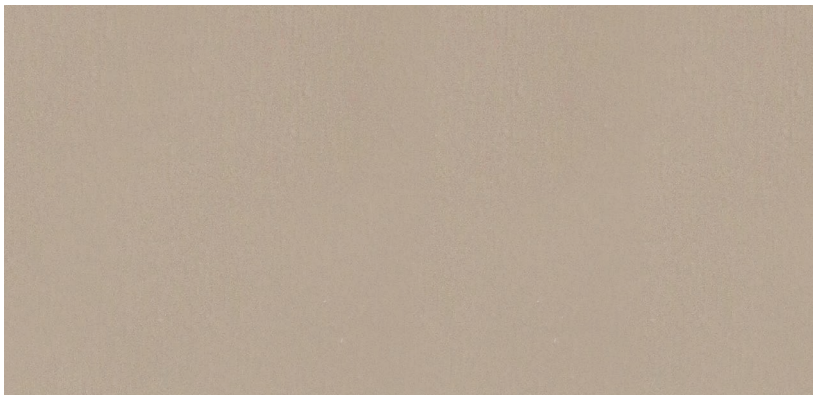

5

6

5 Black
6 Estate Oak
7 Unfinished
8 White
9 Mahogany

7

8

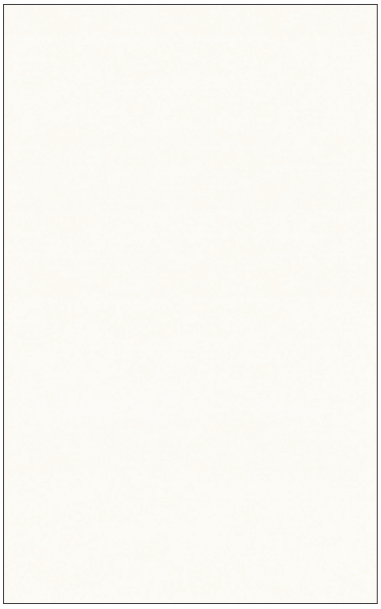

9

1⅜" Finials & Endcaps

Button Ball

Fits	Dimensions	Quantity per Box
1⅜" Wood Trends™ Poles 1⅜" Estate™ Traverse Rods 1⅜" K-Rail Traverse Rods	Depth: 3½" Height: 2½" Width: 2½"	10 pairs per box

Product Number & Finish					
5629G059	Black	**5629G820**	Estate Oak	**5629G835**	Truffle
5629G841	Coffee	**5629G083**	Mahogany	**5629G025**	White
5629G825	Dark Chocolate	**5629G830**	Marble		

Chaucer

Fits	Dimensions	Quantity per Box
1⅜" Wood Trends™ Poles 1⅜" Estate™ Traverse Rods 1⅜" K-Rail Traverse Rods	Depth: 3¾" Height: 3¼" Width: 3¼"	10 pairs per box

Product Number & Finish					
36807059	Black	**36807820**	Estate Oak	**36807835**	Truffle
36807841	Coffee	**36807083**	Mahogany	**36807025**	White
36807825	Dark Chocolate	**36807830**	Marble	**36807091**	Unfinished

Ethan

Fits	Dimensions	Quantity per Box
1⅜" Wood Trends™ Poles 1⅜" Estate™ Traverse Rods 1⅜" K-Rail Traverse Rods	Depth: 2¾" Height: 3¼" Width: 3¼"	10 pairs per box

Product Number & Finish					
36814059	Black	**36814820**	Estate Oak	**36814835**	Truffle
36814841	Coffee	**36814083**	Mahogany	**36814025**	White
36814825	Dark Chocolate	**36814830**	Marble	**36814091**	Unfinished

Hugo

Fits	Dimensions	Quantity per Box
1⅜" Wood Trends™ Poles 1⅜" Estate™ Traverse Rods 1⅜" K-Rail Traverse Rods	Depth: 2" Height: 2½" Width: 2½"	10 pairs per box

Product Number & Finish					
36815059	Black	**36815820**	Estate Oak	**36815835**	Truffle
36815841	Coffee	**36815083**	Mahogany	**36815025**	White
36815825	Dark Chocolate	**36815830**	Marble	**36815191**	Unfinished

1⅜" Finials & Endcaps

Miller

Fits	Dimensions	Quantity per Box
1⅜" Wood Trends™ Poles 1⅜" Estate™ Traverse Rods 1⅜" K-Rail Traverse Rods	Depth: 2⅜" Height: 3" Width: 3"	10 pairs per box

Product Number & Finish					
36816059	Black	**36816820**	Estate Oak	**36816835**	Truffle
36816841	Coffee	**36816083**	Mahogany	**36816025**	White
36816825	Dark Chocolate	**36816830**	Marble	**36816091**	Unfinished

Sherwood

Fits	Dimensions	Quantity per Box
1⅜" Wood Trends™ Poles 1⅜" Estate™ Traverse Rods 1⅜" K-Rail Traverse Rods	Depth: 3¾" Height: 2¾" Width: 2¾"	10 pairs per box

Product Number & Finish					
5609EG059	Black	**5609EG820**	Estate Oak	**5609EG835**	Truffle
5609EG841	Coffee	**5609EG083**	Mahogany	**5609EG025**	White
5609EG825	Dark Chocolate	**5609EG830**	Marble	**5609EG091**	Unfinished

Warren

Fits	Dimensions	Quantity per Box
1⅜" Wood Trends™ Poles 1⅜" Estate™ Traverse Rods 1⅜" K-Rail Traverse Rods	Depth: 1¼" Height: 2½" Width: 2½"	10 pairs per box

Product Number & Finish					
36817059	Black	**36817820**	Estate Oak	**36817835**	Truffle
36817841	Coffee	**36817083**	Mahogany	**36817025**	White
36817825	Dark Chocolate	**36817830**	Marble	**36817091**	Unfinished

Wood Ball

Fits	Dimensions	Quantity per Box
1⅜" Wood Trends™ Poles 1⅜" Estate™ Traverse Rods 1⅜" K-Rail Traverse Rods	Depth: 3½" Height: 2½" Width: 2½"	10 pairs per box

Product Number & Finish					
5608EG059	Black	**5608EG820**	Estate Oak	**5608EG835**	Truffle
5608EG841	Coffee	**5608EG083**	Mahogany	**5608EG025**	White
5608EG825	Dark Chocolate	**5608EG830**	Marble	**5608EG091**	Unfinished

1⅜" Finials & Endcaps

Endcap

Fits	Dimensions	Quantity per Box
1⅜" Wood Trends™ Poles 1⅜" Estate™ Traverse Rods 1⅜" K-Rail Traverse Rods	Depth: ¾" Height: 2" Width: 2"	10 pairs per box

Product Number & Finish

36808059	Black	**36808820**	Estate Oak	**36808835**	Truffle
36808841	Coffee	**36808083**	Mahogany	**36808025**	White
36808825	Dark Chocolate	**36808830**	Marble	**36808091**	Unfinished

Hugo | Coffee

1⅜" Poles

4' Smooth Pole

Diameter	Length	Quantity per Box
1⅜"	4'	6 pieces per box

Product Number & Finish					
56014G059	Black	**56014G820**	Estate Oak	**56014G835**	Truffle
56014G841	Coffee	**56014G083**	Mahogany	**56014G025**	White
56014G825	Dark Chocolate	**56014G830**	Marble	**56014G091**	Unfinished

4' Fluted Pole

Diameter	Length	Quantity per Box
1⅜"	4'	6 pieces per box

Product Number & Finish					
56004G059	Black	**56004G820**	Estate Oak	**56004G835**	Truffle
56004G841	Coffee	**56004G083**	Mahogany	**56004G025**	White
56004G825	Dark Chocolate	**56004G830**	Marble	**56004G091**	Unfinished

6' Smooth Pole

Diameter	Length	Quantity per Box
1⅜"	6'	6 pieces per box

Product Number & Finish					
56016G059	Black	**56016G820**	Estate Oak	**56016G835**	Truffle
56016G841	Coffee	**56016G083**	Mahogany	**56016G025**	White
56016G825	Dark Chocolate	**56016G830**	Marble	**56016G091**	Unfinished

6' Fluted Pole

Diameter	Length	Quantity per Box
1⅜"	6'	6 pieces per box

Product Number & Finish					
56006G059	Black	**56006G820**	Estate Oak	**56006G835**	Truffle
56006G841	Coffee	**56006G083**	Mahogany	**56006G025**	White
56006G825	Dark Chocolate	**56006G830**	Marble	**56006G091**	Unfinished

1⅜" Poles

8' Smooth Pole

Diameter	Length	Quantity per Box
1⅜"	8'	6 pieces per box

Product Number & Finish					
56018G059	Black	**56018G820**	Estate Oak	**56018G835**	Truffle
56018G841	Coffee	**56018G083**	Mahogany	**56018G025**	White
56018G825	Dark Chocolate	**56018G830**	Marble	**56018G091**	Unfinished

8' Fluted Pole

Diameter	Length	Quantity per Box
1⅜"	8'	6 pieces per box

Product Number & Finish					
56008G059	Black	**56008G820**	Estate Oak	**56008G835**	Truffle
56008G841	Coffee	**56008G083**	Mahogany	**56008G025**	White
56008G825	Dark Chocolate	**56008G830**	Marble	**56008G091**	Unfinished

12' Smooth Pole

Diameter	Length	Quantity per Box
1⅜"	12'	6 pieces per box

Product Number & Finish					
560112G059	Black	**560112G820**	Estate Oak	**560112G835**	Truffle
560112G841	Coffee	**560112G083**	Mahogany	**560112G025**	White
560112G825	Dark Chocolate	**560112G830**	Marble	**560112G091**	Unfinished

12' Fluted Pole

Diameter	Length	Quantity per Box
1⅜"	12'	6 pieces per box

Product Number & Finish					
560012G059	Black	**560012G820**	Estate Oak	**560012G835**	Truffle
560012G841	Coffee	**560012G083**	Mahogany	**560012G025**	White
560012G825	Dark Chocolate	**560012G830**	Marble	**560012G091**	Unfinished

1⅜" Estate™ Traverse Rods

To learn more about the technical specs on Estate Traverse Rods and AMP™ Motorization, see pages 36-39.

Assembled Set with Slides

Manual Traversing Rods with Selected Carriers
Unit of Measure
Foot
AMP™ Motorization Upcharge Charger, item #62201300 included. Remotes sold separately.

Product Number & Finish					
94675059	Black	**94675820**	Estate Oak	**94675835**	Truffle
94675841	Coffee	**94675083**	Mahogany	**94675025**	White
94675825	Dark Chocolate	**94675830**	Marble		

Assembled Set with Wheeled Ripplefold™ Carriers

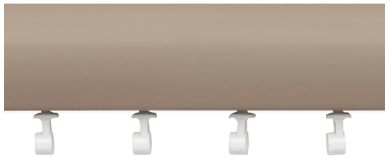

Manual Traversing Rods with Selected Carriers
Unit of Measure
Foot
AMP™ Motorization Upcharge Charger, item #62201300 included. Remotes sold separately.

Product Number & Finish					
94676058	Black	**94676820**	Estate Oak	**94676835**	Truffle
94676841	Coffee	**94676083**	Mahogany	**94676025**	White
94676825	Dark Chocolate	**94676830**	Marble		

Double Bracket

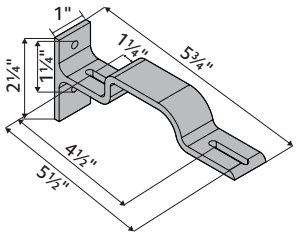

Fits	Dimensions	Quantity per Box
1⅜" Estate™ Traverse Rods 2" Estate™ Traverse Rods	Depth: 5¾" Height: 2¼" Width: 1"	10 pieces per box

Product Number & Finish	
71134110	Satin Brass

Double Bracket

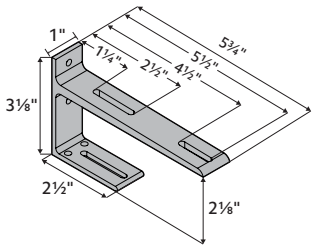

Fits	Dimensions	Quantity per Box
1⅜" Estate™ Traverse Rods 2" Estate™ Traverse Rods	Depth: 5¾" Height: 3⅛" Width: 1"	10 pieces per box

Product Number & Finish			
71132062	Antique Brass	**71132110**	Satin Brass
71132006	Black	**71132012**	Satin Nickel

Miller | Mahogany

1⅜" Estate™ Traverse Rod Components

To learn more about the technical specs on Estate Traverse Rods and AMP™ Motorization, see pages 36-39.

Item	Product No. & Finish		Description	Quantity Per Box
	62101000 **62101010**	White Black	AMP Remote Control RF 2W 15 Channel	1 piece per box
	62201300	White	AMP Battery Charger 16.5V/0.89A	1 piece per box
	62102000	White	AMP Gateway USB Bridge	1 piece per box
	62109000	White	AMP Wall Switch Surface RF 2W 15 Channel	1 piece per box
	62108000	White	AMP Wall Switch RF 2W 15 Channel	1 piece per box
	1026660		15" Cable Assembly	10 pieces per box
	1026661		4' Cable Assembly	10 pieces per box
	1026662		10' Cable Assembly	10 pieces per box
	1026663		20' Cable Assembly	10 pieces per box

1⅜" Rings

Ring with Eyelet

Fits	Dimensions	Quantity per Box
1⅜" Wood Trends™ Poles	Internal: 1⅞" External: 2⅞" External to eyelet: 3¼"	10 bags per box - 7 rings per bag

Product Number & Finish		
5602EG059 Black	**5602EG820** Estate Oak	**5602EG835** Truffle
5602EG481 Coffee	**5602EG083** Mahogany	**5602EG025** White
5602EG825 Dark Chocolate	**5602EG830** Marble	**5602EG091** Unfinished

BULK - Ring with Eyelet

Fits	Dimensions	Quantity per Box
1⅜" Wood Trends™ Poles	Internal: 1⅞" External: 2⅞" External to eyelet: 3¼"	70 pieces per box

Product Number & Finish		
5602BB059 Black	**5602BB820** Estate Oak	**5602BB835** Truffle
5602BB841 Coffee	**5602BB083** Mahogany	**5602BB025** White
5602BB825 Dark Chocolate	**5602BB830** Marble	**5602BB091** Unfinished

Metal clip, item 5605BB063 can be ordered separately.

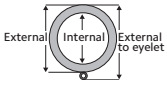

Use the measurement guide to the left to help determine the correct dimensions for your selected product.

1⅜" Brackets

3½" Return Wood Bracket

Fits	Dimensions	Quantity per Box
1⅜" Wood Trends™ Poles	Depth: 5¼" Height: 3¾" Width: ⅞" Wall to Pole: 3" Return: 3½"	10 pieces per box

Product Number & Finish					
5611EG059	Black	**5611EG820**	Estate Oak	**5611EG835**	Truffle
5611EG841	Coffee	**5611EG083**	Mahogany	**5611EG025**	White
5611EG825	Dark Chocolate	**5611EG830**	Marble	**5611EG091**	Unfinished

BULK - 3½" Return Wood Bracket

Fits	Dimensions	Quantity per Box
1⅜" Wood Trends™ Poles	Depth: 5¼" Height: 3¾" Width: ⅞" Wall to Pole: 3" Return: 3½"	20 pieces per box

Product Number & Finish					
5611BB059	Black	**5611BB820**	Estate Oak	**5611BB835**	Truffle
5611BB841	Coffee	**5611BB083**	Mahogany	**5611BB025**	White
5611BB825	Dark Chocolate	**5611BB830**	Marble	**5611BB091**	Unfinished

4¼" Return Wood Bracket

Fits	Dimensions	Quantity per Box
1⅜" Wood Trends™ Poles	Depth: 5½" Height: 2⅝" Width: 1" Wall to Pole: 3½" Return: 4¼"	10 pieces per box

Product Number & Finish					
5691G059	Black	**5691G820**	Estate Oak	**5691G835**	Truffle
5691G841	Coffee	**5691G083**	Mahogany	**5691G025**	White
5691G825	Dark Chocolate	**5691G830**	Marble	**5691G091**	Unfinished

6" Return Wood Bracket

Fits	Dimensions	Quantity per Box
1⅜" Wood Trends™ Poles	Depth: 7⅝" Height: 4" Width: ⅞" Wall to Pole: 5¼" Return: 6"	5 pairs per box

Product Number & Finish					
5614EG059	Black	**5614EG820**	Estate Oak	**5614EG835**	Truffle
5614EG841	Coffee	**5614EG083**	Mahogany	**5614EG025**	White
5614EG825	Dark Chocolate	**5614EG830**	Marble	**5614EG091**	Unfinished

Use the measurement guide to the left to help determine the correct dimensions for your selected product.

1⅜" Brackets

Ceiling Mount Bracket

Fits	Dimensions	Quantity per Box
1⅜" Wood Trends™ Poles	Depth: 5" Height: 4¾" Width: 1" Ceiling to Pole: 4" Back Edge to Pole: 2⅞"	5 pieces per box

Product Number & Finish					
46855059	Black	**46855820**	Estate Oak	**46855835**	Truffle
46855841	Coffee	**46855083**	Mahogany	**46855025**	White
46855825	Dark Chocolate	**46855830**	Marble		

Double Bracket

Fits	Dimensions	Quantity per Box
1⅜" Wood Trends™ Poles	Depth: 8" Height: 4¾" Width: 1" Wall to Back Pole: 2" Inner Return: 2¾" Outer Return: 6"	5 pieces per box

Product Number & Finish					
5620EG059	Black	**5620EG820**	Estate Oak	**5620EG835**	Truffle
5620EG841	Coffee	**5620EG083**	Mahogany	**5620EG025**	White
5620EG825	Dark Chocolate	**5620EG830**	Marble		

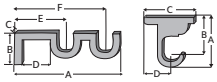

Use the measurement guide to the left to help determine the correct dimensions for your selected product.

1⅜" Components

Inside Mount Socket

Fits	Dimensions	Quantity per Box
1⅜" Wood Trends™ Poles	Depth: 1 9/32" Height: 1 13/16" Width: 1 13/16"	10 pairs per box

Product Number & Finish					
5605EG059	Black	**5605EG820**	Estate Oak	**5605EG835**	Truffle
5605EG841	Coffee	**5605EG083**	Mahogany	**5605EG025**	White
5605EG825	Dark Chocolate	**5605EG830**	Marble	**5605EG091**	Unfinished

Swivel Socket

Fits	Dimensions	Quantity per Box
1⅜" Wood Trends™ Poles	Length to Center: 2⅜" Pole Diameter: 1⅜" Full Length: 3 3/16" Depth of Socket: 1⅛"	5 pieces per box

Product Number & Finish					
5606E059	Black	**5606E820**	Estate Oak	**5606E835**	Truffle
5606E841	Coffee	**5606E083**	Mahogany	**5606E835**	White
5606E825	Dark Chocolate	**5606E830**	Marble	**5606E091**	Unfinished

Elbow - 3½"-5½" Clearance

See page 53 for configuration

Fits	Clearance	Quantity per Box
1⅜" Wood Trends™ Poles	3½"-5½"	10 pieces per box

Product Number & Finish	
5613E091	Unfinished

Elbow - 6"-8" Clearance

See page 53 for configuration

Fits	Clearance	Quantity per Box
1⅜" Wood Trends™ Poles	6"-8"	10 pieces per box

Product Number & Finish	
5617091	Unfinished

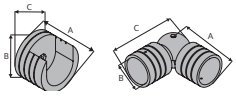

Use the measurement guide to the left to help determine the correct dimensions for your selected product.

1⅜" Components

Metal Bracket

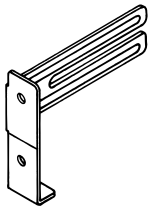

See page 53 for configuration

Fits	Quantity per Box
For use on wood elbows	20 pairs per box

Product Number & Finish	
5623063	Brass

Hidden Metal Support - 2½"-3½" Clearance

See page 53 for configuration

Clearance	Quantity per Box
2½"-3½"	20 pieces per box

Product Number & Finish	
5618063	Brass

Hidden Metal Support - 4"-5½" Clearance

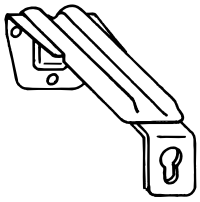

See page 53 for configuration

Clearance	Quantity per Box
4"-5½"	20 pieces per bag

Product Number & Finish	
5619063	Brass

Ethan | Black

2" Finials & Endcaps

Button Ball

Fits	Dimensions	Quantity per Box
2" Wood Trends™ Poles 2" Estate™ Traverse Rods	Depth: 4⅝" Height: 3½" Width: 3½"	10 pieces per box

Product Number & Finish					
46813059	Black	**46813820**	Estate Oak	**46813835**	Truffle
46813841	Coffee	**46813083**	Mahogany	**46813025**	White
46813825	Dark Chocolate	**46813830**	Marble	**46813091**	Unfinished

Chaucer

Fits	Dimensions	Quantity per Box
2" Wood Trends™ Poles 2" Estate™ Traverse Rods	Depth: 4⅜" Height: 3¾" Width: 3¾"	10 pieces per box

Product Number & Finish					
46807059	Black	**46807820**	Estate Oak	**46807835**	Truffle
46807841	Coffee	**46807083**	Mahogany	**46807025**	White
46807825	Dark Chocolate	**46807830**	Marble	**46807091**	Unfinished

Ethan

Fits	Dimensions	Quantity per Box
2" Wood Trends™ Poles 2" Estate™ Traverse Rods	Depth: 4" Height: 4¾" Width: 4¾"	10 pieces per box

Product Number & Finish					
46814059	Black	**46814820**	Estate Oak	**46814835**	Truffle
46814841	Coffee	**46814083**	Mahogany	**46814025**	White
46814825	Dark Chocolate	**46814830**	Marble	**46814091**	Unfinished

Hugo

Fits	Dimensions	Quantity per Box
2" Wood Trends™ Poles 2" Estate™ Traverse Rods	Depth: 2⅞" Height: 3¾" Width: 3¾"	10 pieces per box

Product Number & Finish					
46815059	Black	**46815820**	Estate Oak	**46815835**	Truffle
46815841	Coffee	**46815083**	Mahogany	**46815025**	White
46815825	Dark Chocolate	**46815830**	Marble	**46815091**	Unfinished

2" Finials & Endcaps

Miller

Fits	Dimensions	Quantity per Box
2" Wood Trends™ Poles 2" Estate™ Traverse Rods	Depth: 3½" Height: 4½" Width: 4½"	10 pieces per box

Product Number & Finish					
46816059	Black	**46816820**	Estate Oak	**46816835**	Truffle
46816841	Coffee	**46816083**	Mahogany	**46816025**	White
46816825	Dark Chocolate	**46816830**	Marble	**46816091**	Unfinished

Sherwood

Fits	Dimensions	Quantity per Box
2" Wood Trends™ Poles 2" Estate™ Traverse Rods	Depth: 5" Height: 3" Width: 3"	10 pieces per box

Product Number & Finish					
5509EG059	Black	**5509EG820**	Estate Oak	**5509EG835**	Truffle
5509EG841	Coffee	**5509EG083**	Mahogany	**5509EG025**	White
5509EG825	Dark Chocolate	**5509EG830**	Marble	**5509EG091**	Unfinished

Warren

Fits	Dimensions	Quantity per Box
2" Wood Trends™ Poles 2" Estate™ Traverse Rods	Depth: 1⅞" Height: 3¾" Width: 3¾"	10 pieces per box

Product Number & Finish					
46817059	Black	**46817820**	Estate Oak	**46817835**	Truffle
46817841	Coffee	**46817083**	Mahogany	**46817025**	White
46817825	Dark Chocolate	**46817830**	Marble	**46817091**	Unfinished

Wood Ball

Fits	Dimensions	Quantity per Box
2" Wood Trends™ Poles 2" Estate™ Traverse Rods	Depth: 5¼" Height: 3¾" Width: 3¾"	10 pieces per box

Product Number & Finish					
5508EG059	Black	**5508EG820**	Estate Oak	**5508EG835**	Truffle
5508EG841	Coffee	**5508EG083**	Mahogany	**5508EG025**	White
5508EG825	Dark Chocolate	**5508EG830**	Marble	**5508EG091**	Unfinished

2" Finials & Endcaps

Endcap

Fits	Dimensions	Quantity per Box
2" Wood Trends™ Poles 2" Estate™ Traverse Rods	Depth: 1⅜" Height: 3" Width: 3"	10 pairs per box

Product Number & Finish					
46808059	Black	**46808820**	Estate Oak	**46808835**	Truffle
46808841	Coffee	**46808083**	Mahogany	**46808025**	White
46808825	Dark Chocolate	**46808830**	Marble	**46808091**	Unfinished

Chaucer | Dark Chocolate

1⅜" Fluted Pole | Estate Oak

2" Fluted Pole | Black

2" Smooth Pole | Marble

1⅜" Smooth Pole | Coffee

2" Poles

4' Smooth Pole

Diameter	Length	Quantity per Box
2"	4'	2 pieces per box

Product Number & Finish					
55014G059	Black	**55014G820**	Estate Oak	**55014G835**	Truffle
55014G841	Coffee	**55014G083**	Mahogany	**55014G025**	White
55014G825	Dark Chocolate	**55014G830**	Marble	**55014G091**	Unfinished

4' Fluted Pole

Diameter	Length	Quantity per Box
2"	4'	2 pieces per box

Product Number & Finish					
55004G059	Black	**55004G820**	Estate Oak	**55004G835**	Truffle
55004G841	Coffee	**55004G083**	Mahogany	**55004G025**	White
55004G825	Dark Chocolate	**55004G830**	Marble	**55004G091**	Unfinished

6' Smooth Pole

Diameter	Length	Quantity per Box
2"	6'	2 pieces per box

Product Number & Finish					
55016G059	Black	**55016G820**	Estate Oak	**55016G835**	Truffle
55016G841	Coffee	**55016G083**	Mahogany	**55016G025**	White
55016G825	Dark Chocolate	**55016G830**	Marble	**55016G091**	Unfinished

6' Fluted Pole

Diameter	Length	Quantity per Box
2"	6'	2 pieces per box

Product Number & Finish					
55006G059	Black	**55006G820**	Estate Oak	**55006G835**	Truffle
55006G841	Coffee	**55006G083**	Mahogany	**55006G025**	White
55006G825	Dark Chocolate	**55006G830**	Marble	**55006G091**	Unfinished

2" Poles

8' Smooth Pole

Diameter	Length	Quantity per Box
2"	8'	2 pieces per box

Product Number & Finish		
55018G059 Black	**55018G820** Estate Oak	**55018G835** Truffle
55018G841 Coffee	**55018G083** Mahogany	**55018G025** White
55018G825 Dark Chocolate	**55018G830** Marble	**55018G091** Unfinished

8' Fluted Pole

Diameter	Length	Quantity per Box
2"	8'	2 pieces per box

Product Number & Finish		
55008G059 Black	**55008G820** Estate Oak	**55008G835** Truffle
55008G841 Coffee	**55008G083** Mahogany	**55008G025** White
55008G825 Dark Chocolate	**55008G830** Marble	**55008G091** Unfinished

12' Smooth Pole

Diameter	Length	Quantity per Box
2"	12'	2 pieces per box

Product Number & Finish		
550112G059 Black	**550112G820** Estate Oak	**550112G835** Truffle
550112G841 Coffee	**550112G083** Mahogany	**550112G025** White
550112G825 Dark Chocolate	**550112G830** Marble	**550112G091** Unfinished

12' Fluted Pole

Diameter	Length	Quantity per Box
2"	12'	2 pieces per box

Product Number & Finish		
550012G059 Black	**550012G820** Estate Oak	**550012G835** Truffle
550012G841 Coffee	**550012G083** Mahogany	**550012G025** White
550012G825 Dark Chocolate	**550012G830** Marble	**550012G091** Unfinished

2" Estate™ Traverse Rods

To learn more about the technical specs on Estate Traverse Rods and AMP™ Motorization, see pages 36-39.

Assembled Set with Slides

Manual Traversing Rods with Selected Carriers
Unit of Measure
Foot
AMP™ Motorization Upcharge Charger, item #62201300 included. Remotes sold separately.

Product Number & Finish					
95675059	Black	**95675820**	Estate Oak	**95675835**	Truffle
95675841	Coffee	**95675083**	Mahogany	**95675025**	White
95675825	Dark Chocolate	**95675830**	Marble		

Assembled Set with Wheeled Ripplefold™ Carriers

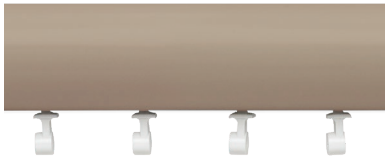

Manual Traversing Rods with Selected Carriers
Unit of Measure
Foot
AMP™ Motorization Upcharge Charger, item #62201300 included. Remotes sold separately.

Product Number & Finish					
95676058	Black	**95676820**	Estate Oak	**95676835**	Truffle
95676841	Coffee	**95676083**	Mahogany	**95676025**	White
95676825	Dark Chocolate	**95676830**	Marble		

Double Bracket

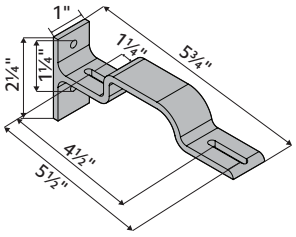

Fits	Dimensions	Quantity per Box
1⅜" Estate™ Traverse Rods 2" Estate™ Traverse Rods	Depth: 5¾" Height: 2¼" Width: 1"	10 pieces per box

Product Number & Finish	
71134110	Satin Brass

Double Bracket

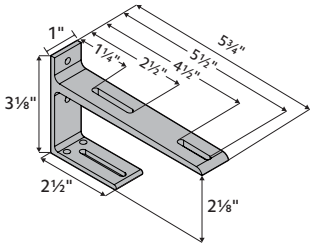

Fits	Dimensions	Quantity per Box
1⅜" Estate™ Traverse Rods 2" Estate™ Traverse Rods	Depth: 5¾" Height: 3⅛" Width: 1"	10 pieces per box

Product Number & Finish			
71132062	Antique Brass	**71132110**	Satin Brass
71132006	Black	**71132012**	Satin Nickel

2" Estate™ Traverse Rod Components

To learn more about the technical specs on Estate Traverse Rods and AMP™ Motorization, see pages 36-39.

Item	Product No. & Finish		Description	Quantity Per Box
	62101000 **62101010**	White Black	AMP Remote Control RF 2W 15 Channel	1 piece per box
	62201300	White	AMP Battery Charger 16.5V/0.89A	1 piece per box
	62102000	White	AMP Gateway USB Bridge	1 piece per box
	62109000	White	AMP Wall Switch Surface RF 2W 15 Channel	1 piece per box
	62108000	White	AMP Wall Switch RF 2W 15 Channel	1 piece per box
	1026660		15" Cable Assembly	10 pieces per box
	1026661		4' Cable Assembly	10 pieces per box
	1026662		10' Cable Assembly	10 pieces per box
	1026663		20' Cable Assembly	10 pieces per box

2" Rings

Ring with Eyelet

Fits	Dimensions	Quantity per Box
2" Wood Trends™ Poles	Internal: 2⅜" External: 3⅞" External to eyelet: 4¼"	10 bags per box - 4 rings per bag

Product Number & Finish		
5502EG059 Black	**5502EG820** Estate Oak	**5502EG835** Truffle
5502EG481 Coffee	**5502EG083** Mahogany	**5502EG025** White
5502EG825 Dark Chocolate	**5502EG830** Marble	**5502EG091** Unfinished

Metal clip, item 5605BB063 can be ordered separately.

Rings with Removable Clips
- Estate Oak
- Coffee
- Truffle
- Black
- Marble

Rings with Eyelet
- White
- Black
- Mahogany
- Estate Oak

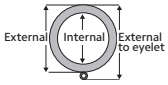

Use the measurement guide to the left to help determine the correct dimensions for your selected product.

2" Brackets

3½" Return Wood Bracket

Fits	Dimensions	Quantity per Box
2" Wood Trends™ Poles	Depth: 5⅝" Height: 4¾" Width: 1" Wall to Pole: 2½" Return: 3½"	10 pieces per box

Product Number & Finish					
5503EG059	Black	**5503EG820**	Estate Oak	**5503EG835**	Truffle
5503EG841	Coffee	**5503EG083**	Mahogany	**5503EG025**	White
5503EG825	Dark Chocolate	**5503EG830**	Marble	**5503EG091**	Unfinished

6" Return Wood Bracket

Fits	Dimensions	Quantity per Box
2" Wood Trends™ Poles	Depth: 8" Height: 4¾" Width: 1" Wall to Pole: 5" Return: 6"	5 pieces per box

Product Number & Finish					
5511EG059	Black	**5511EG820**	Estate Oak	**5511EG835**	Truffle
5511EG841	Coffee	**5511EG083**	Mahogany	**5511EG025**	White
5511EG825	Dark Chocolate	**5511EG830**	Marble	**5511EG091**	Unfinished

Ceiling Mount Bracket

Fits	Dimensions	Quantity per Box
2" Wood Trends™ Poles	Depth: 6" Height: 6" Width: 1" Ceiling to Pole: 5⅜" Back Edge to Pole: 2⅞"	5 pieces per box

Product Number & Finish					
46850059	Black	**46850820**	Estate Oak	**46850835**	Truffle
46850841	Coffee	**46850083**	Mahogany	**46850025**	White
46850825	Dark Chocolate	**46850830**	Marble		

Double Bracket

Fits	Dimensions	Quantity per Box
Front: 2" Wood Trends™ Poles Back: 1⅜" Wood Trends™ Poles	Depth: 9" Height: 4¾" Width: 1" Wall to Back Pole: 2⅜" Inner Return: 3" Outer Return: 7"	5 pieces per box

Product Number & Finish					
5520EG059	Black	**5520EG820**	Estate Oak	**5520EG835**	Truffle
5520EG841	Coffee	**5520EG083**	Mahogany	**5520EG025**	White
5520EG825	Dark Chocolate	**5520EG830**	Marble		

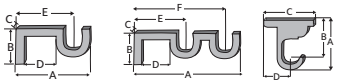

Use the measurement guide to the left to help determine the correct dimensions for your selected product.

2" Components

Swivel Socket

Fits	Dimensions	Quantity per Box
2" Wood Trends™ Poles	Length to Center: 3⅝" Pole Diameter: 2⅛" Full Length: 4⅞" Depth of Socket: 1¾"	5 pieces per box

Product Number & Finish					
5506EG059	Black	**5506EG820**	Estate Oak	**5506EG835**	Truffle
5506EG841	Coffee	**5506EG083**	Mahogany	**5506EG025**	White
5506EG825	Dark Chocolate	**5506EG830**	Marble	**5506EG091**	Unfinished

Elbow - 3½"-5½" Clearance

Fits	Clearance	Quantity per Box
2" Wood Trends™ Poles	3½"-5½"	10 pieces per box

Product Number & Finish	
5513091	Unfinished

See page 53 for configuration

Elbow - 6"-8" Clearance

Fits	Clearance	Quantity per Box
2" Wood Trends™ Poles	6"-8"	10 pieces per box

Product Number & Finish	
5517091	Unfinished

See page 53 for configuration

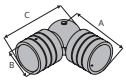

Use the measurement guide to the left to help determine the correct dimensions for your selected product.

2" Components

Metal Bracket

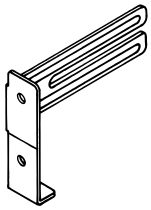

See page 53 for configuration

Fits	Quantity per Box
For use on wood elbows	20 pieces per box

Product Number & Finish	
5623063	Brass

Hidden Metal Support - 2½"-3½" Clearance

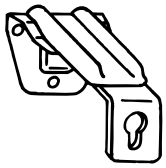

See page 53 for configuration

Clearance	Quantity per Box
2½"-3½"	20 pieces per box

Product Number & Finish	
5618063	Brass

Hidden Metal Support - 4"-5½" Clearance

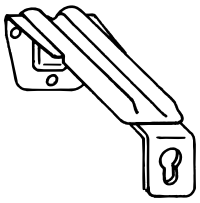

See page 53 for configuration

Clearance	Quantity per Box
4"-5½"	20 pieces per bag

Product Number & Finish	
5619063	Brass

Accessories & Components

3¾" Holdback Medallion

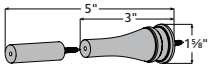

Dimensions	Quantity per Box
Depth: 3"-5" Adjustable post arm with 3" or 5" clearance included. Height: 3¾" Width: 3¾"	4 pairs per box

Product Number & Finish					
46865059	Black	**46865820**	Estate Oak	**46865835**	Truffle
46865841	Coffee	**46865083**	Mahogany	**46865025**	White
46865825	Dark Chocolate	**46865830**	Marble		

Pole Connector

Fits	Quantity per Box
All Wood Trends™ Poles	20 pieces per box

Product Number & Finish	
5610E061	Zinc Plated

Metal Clip

Dimensions	Quantity per Box
Rings with Eyelets	50 pieces per bag

Product Number & Finish	
5605BB063	Brass

Teflon Tape

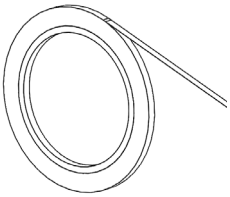

Dimensions	Quantity per Box
54' per roll	1 roll per bag

Product Number & Finish	
84990000	Clear

Teflon tape is used on stationary poles to help rings slide smoothly across the pole.

AMP™ Motorization

Why AMP™?

The slim design of the quiet, yet powerful motor and the position on the track allows the motor to tuck seamlessly behind your drapery panel so you'll never have to sacrifice your style or comfort. For safety measures, you're able to move the draperies with a gentle tug, allowing for operation when a remote is not present or if a guest is unaware of the motorization feature. The dual battery and AC power sources allows operation in case of a power outage so draperies may be opened in the event of an emergency. AMP™ Motorization is available on our most popular traversing tracks, Estate and Architrac® Series 94001 and in drapery header styles Ripplefold™ and pleated for a variety of styling options. This is comfortable living at its finest.

For AMP™ Motorization brochure, programming instructions and installation instructions, please visit the drapery hardware resource library at kirsch.com.

Benefits & Features

AMP™ Motorization

- Motor mounts to the back of the track which allows a seamless look between motorized and manual traverse rods
- Drapery fabrication does not need to change between manually controlled draperies and motorized draperies; No additional returns or any special instructions
- Limits are set automatically after installation
- Remote control is radio frequency and easily pairs with the motor
- Tug feature; when drapery is pulled the motor will traverse the drapery
- AMP™ App with AMP™ USB Bridge
- Architrac® Series 94001 Rods with AMP™ cannot be bent or curved

Frequently Asked Questions

What is the weight capacity?

64 lbs	Motor is rated to 64 lbs. Be sure not to exceed the Estate or Architrac track specifications to ensure your motor operates optimally.

Can you double the weight capacity by using two motors?

No	Only use one motor per rod.

Does AMP™ offer limit setting?

Yes	The motor automatically sets its limits.

Does AMP™ offer touch control?

Yes	The tug feature allows you to pull on the drapery and the motor will automatically open or close your draperies.

How long is the power cord?

6 ft	The durable, non-extendable power cord is extra long for out of reach places. Any extra can be rolled and secured for a tidy look. Cable extensions are available in 15", 4', 10' and 20' lengths to reach outlets that are farther away from the motor.

Is there a wall switch?

Yes	There are Flush Mount and Surface Mount Wall Switches available.

Does AMP™ offer a warranty?

Yes	See the Kirsch Warranty document for more information.

Download the AMP™ APP to get started

Download on the App Store

GET IT ON Google Play

AMP™ Motorization Overview

Overview

- Soft start/stop & manual operation
- Tug feature: when drapery is pulled the motor will traverse the drapery
- Automatic limits on end stop
- Favorite/intermediate position
- Dry contact for external control
- RF Remote and wall switches
- Setting with buttons on motor units
- Setting with external dry contact switch
- LED Indicators
- One-Way and Two-Way Draw
- Pleated
- Ripplefold™
- AMP™ App with AMP™ USB Bridge

Available Colors

White

Side View	Front View	Bottom View

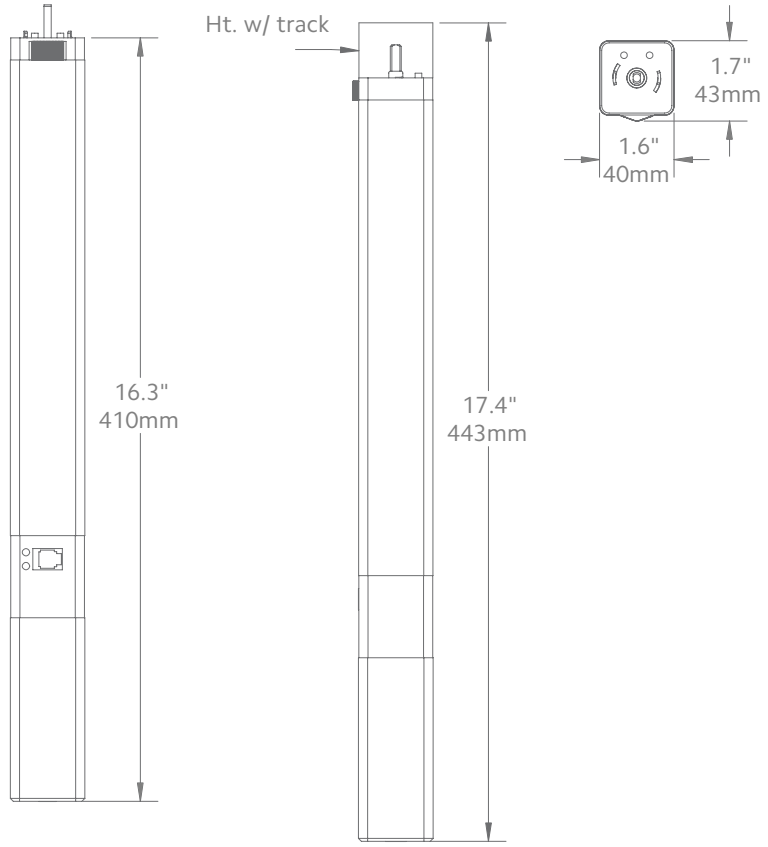

Motor Unit	Product No.
AMP™ Drapery Motor	62001300

Technical Specs	AMP™ Motor
Power Supply	DC 16.5V-0.89A (100-240VAC 50/60Hz 0.5A)
Amperage	2.55Ah
Average Linear Speed	7.8inches/sec
Power Consumption	40 watts
Torque	1.2Nm
Power Cable Length	6 feet
Variable Speed	80, 100 & 120 rpm
Certifications	UL/CE
Max. Track Length	Estate™ - 16 ft Architrac™ 94001 - 16 ft
Max. Load	64 lbs

Follow track specifications for drapery weight.

Estate™ Overview

To help determine which system is right for your project, use the guideline below to select the best fit. For more detailed information about each track, please visit our resource library at kirsch.com.

Estate™ Series	Designer Metals™	Wood Trends™	Wrought Iron
What is your preferred size?			
1⅜"	•	•	•
2"	•	•	
What is your preferred Draw type?			
Motorized	•	•	•
Manual	•	•	•
What is your preferred Drapery Heading type?			
Pleated	•	•	•
Ripplefold™	•	•	•
What is your mounting location?			
Ceiling Mount*	•	•	•
Wall Mount	•	•	•

*Finial choices may be limited for ceiling mounted Estate™ Rods.

Track Performance Data

Style	Heading Style	Mount	Draw	Minimum Track Length	Maximum Track Length	Minimum Fabric Weight	Lbs. per Ft.
83611 1⅜" Estate™ Manual or Motorized Draw	Pleated, Ripplefold™	Ceiling, Wall	One-Way	18 in	16 ft	64 lbs	4
			Two-Way	18 in	16 ft	64 lbs	4
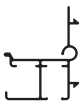 93601 2" Estate™ Manual or Motorized Draw	Pleated, Ripplefold™	Ceiling, Wall	One-Way	18 in	16 ft	64 lbs	4
			Two-Way	18 in	16 ft	64 lbs	4

*Maximum track lengths and maximum fabric weight do not apply to curved track. Check with customer service for feasibility. Send complete specifications and fabric weight.

Operating Systems

Motorized Draw

AMP™ Motorization

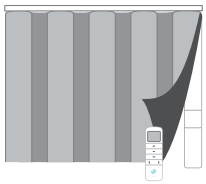

- Easy to use
- Quiet, powerful motor
- Pleated or Ripplefold™
- For Estate™ Traverse Rods or Architrac® Series 94001
- For more information, see page 46

Manual Draw

Cord Draw

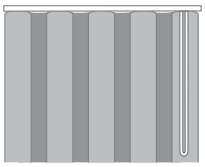

- Easy to use
- Pleated or Ripplefold™

Hand/Baton Draw

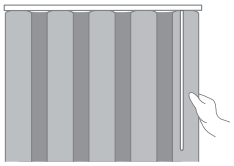

- Easy to use
- A gentle tug allows drapery to glide across track
- Pleated or Ripplefold™

Baton Duplex Draw

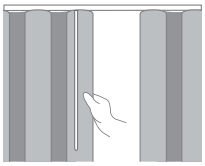

- Easy to use
- Used on split draw rods
- Pleated or Ripplefold™
- When the baton is pulled on one stack, draperies on both sides of the traverse rod open or close

Header Styles

Ripplefold™

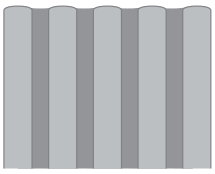

- Panels can be pressed flat, yet fall into fold
- No hooks or pins
- Headings are suspended under track
- Stack back is less than conventional pleated draperies
- Draperies snap on/off carriers for easy installation
- Interior drapery appearance is identical to exterior-facing appearance

Pleated

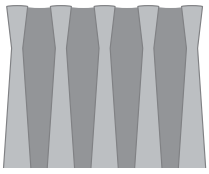

- A classic header option
- Can be used with most track systems using slip-in or pin-on hooks
- Headings can be suspended under the track or over the face of the track to conceal hardware
- Four carriers per foot is standard, additional carriers or rings can be ordered

Bracket Spacing & Mount Options

Place brackets at each end. On the ends where the drapery will stack, place the next bracket at a maximum of 24" from the first bracket, then place remaining brackets at 48" intervals over the remainder of the track. Spacing may need to be shortened for heavier draperies. All mounting options are compatible with our AMP™ Motorization.

Wall Mount using parts:

To achieve this look, order Estate rod, wall mount and all components will be included.

94129061 Zinc	or	1856973 Satin Nickel	or	1856978 Brushed Bronze	or	1857324 Black

1⅜" Wall Mount

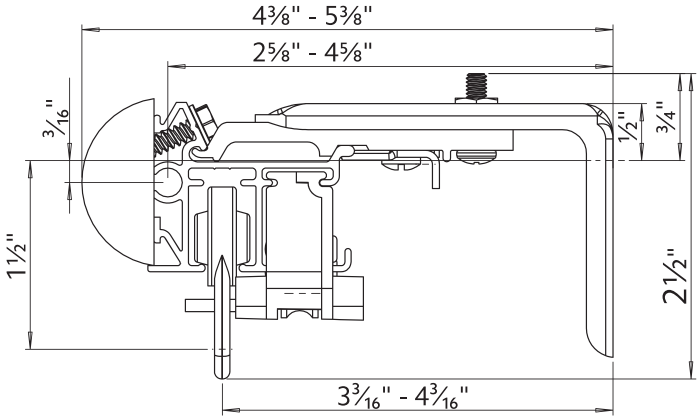

2" Wall Mount

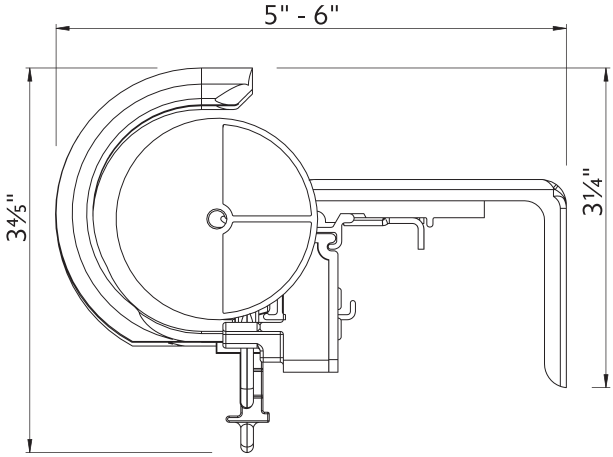

Ceiling Mount using parts:

To achieve this look, order Estate rod, ceiling mounted. 94130xxx brackets are included with the rod. Then order item 1796061 ceiling mount bracket in the quantity needed based on the bracket spacing drawing on page 40.

94130xxx & **1796061**

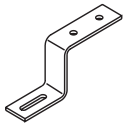

1⅜" Ceiling Mount

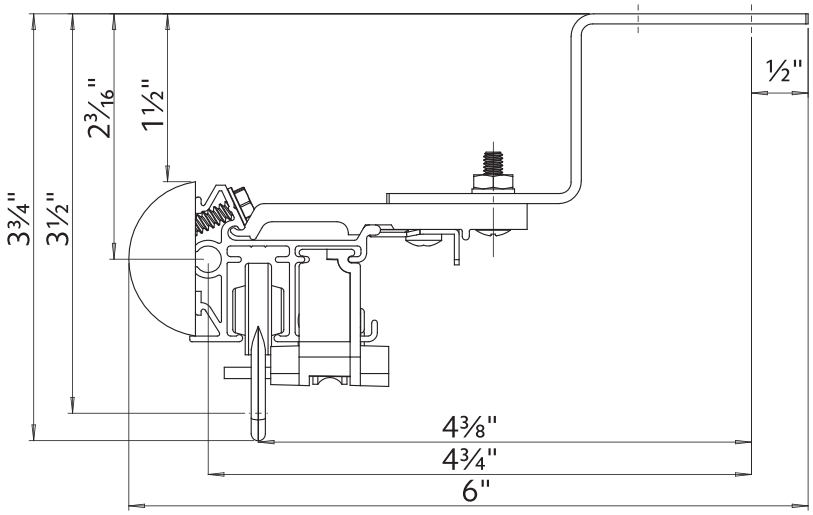

2" Ceiling Mount

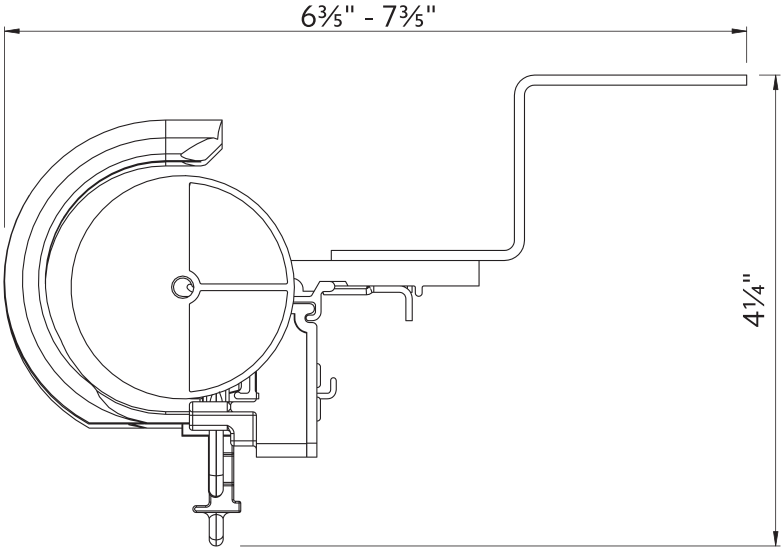

Double Wall Mount using parts:

To achieve this look, order Estate rod, ceiling mounted. 94130xxx brackets are included with the rod. Then order one, item 94125xxx double bracket and two, item 1796061 ceiling mount brackets multiplied by the quantity needed based on the bracket spacing drawing on page 40.

94125xxx & **1796061** & **94130xxx**

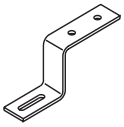

1⅜" Double Wall Mount

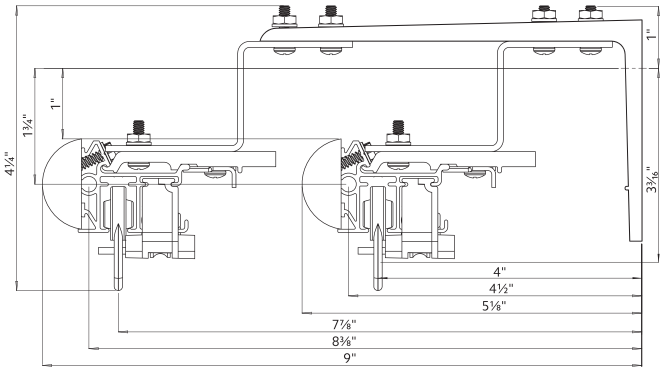

2" Double Wall Mount

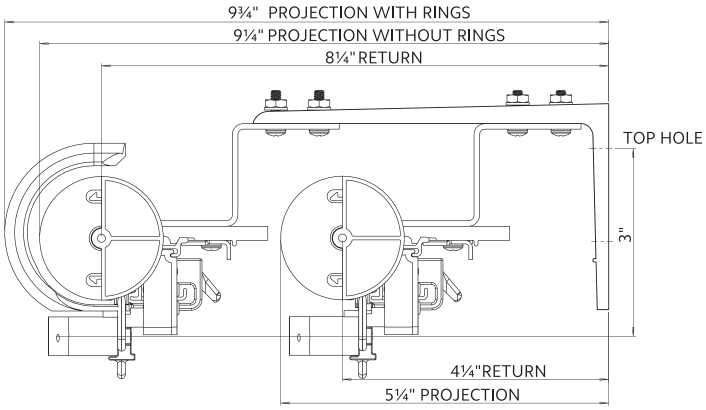

2" Front & 1⅜" Back Double Wall Mount

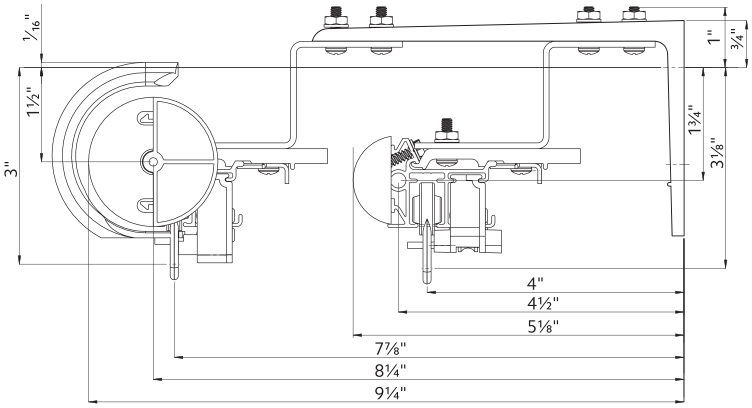

Double Wall Mount using parts:

To achieve this look, order Estate rod ceiling mounted. 94130xxx brackets are included with the rod. Then order one, item 71134110 double bracket in the quantity needed based on the bracket spacing drawing on page 40.

71134110 & **94130xxx**

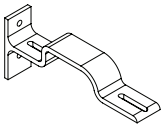

2" Front & 1⅜" Back Double Wall Mount

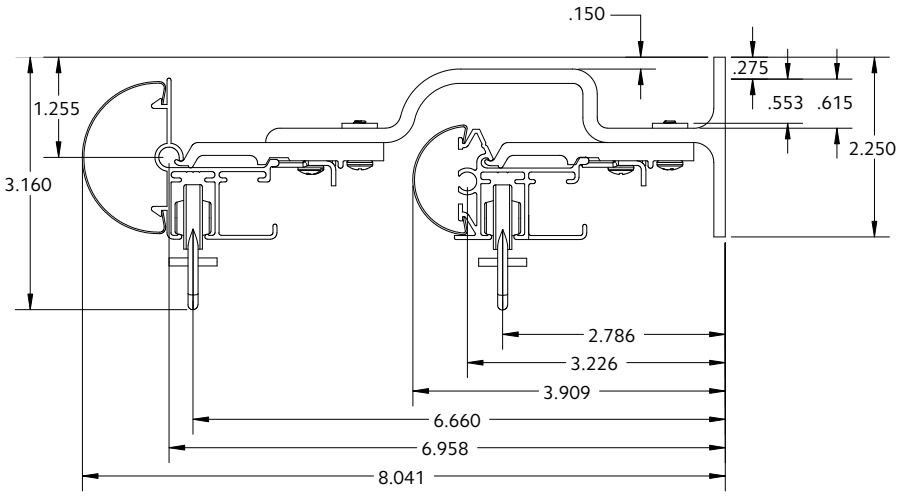

1⅜" Front & 1⅜" Back Double Wall Mount

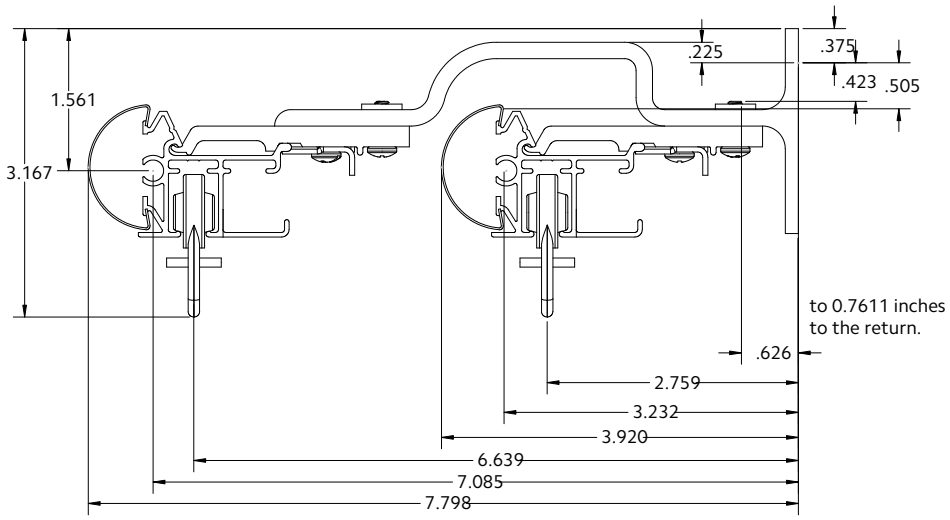

Calculating Drapery Weight

1. Fabric Weight

Some fabric samples list on the back of the swatch the weight listed in Ounces/SqYd (ounces per square yard). Call the manufacturer for the weight if not listed.

2. Lining Weight

Most drapery linings are 2oz - 4oz per square yard.

Drapery Weight Formula

Total Square Yards	= (total yards x 36 x fabric width) ÷ 1296 (1-square yard)
Weight	= total square yards x weight in ounces per SqYd) ÷ 16 oz in lb
Example	32 yards of 54" wide fabric weighing 14 oz/SqYd Total square yards = (32 x 36 x 54) = 62,208 ÷ 1296 = 48 SqYds Weight = (48 x 14oz) = 672 ÷ 16 = 42 lbs

Lining Weight Formula

Total Square Yards	= (total yards x 36 x fabric width) ÷ 1296 (1-square yard)
Weight	= total square yards x weight in ounces per SqYd) ÷ 16 oz in lb
Example	32 yards of 54" wide fabric weighing 6 oz/SqYd Total square yards = (32 x 36 x 54) = 62,208 ÷ 1296 = 48 SqYds Weight = (48 x 4oz) = 192 ÷ 16 = 12 lbs

Fabrics by Weight

Contact the fabric manufacturer for your specific fabric weight.

Fabric Type	Weight per Square Yard
Drapery Lining	2-4oz
Interlining	5-6oz
Blackout Lining	6-10oz
Bump Lining	12-14oz
Silks	2-4oz
Chintz	2-4oz
Printed Cottons	4-6oz
Linens	6-10oz
Jacquards	10-14oz
Velvets	14-18oz

Stack Guides

Pleated Stack Guide (for 16 mm carriers)

Note: Stack size is estimated. Type of fabric used could alter these measurements.

Size of Track (in inches)	5 carriers per foot 3x fullness		4 carriers per foot 2½x fullness		3 carriers per foot 2x fullness	
	Stackback One-Way	Stackback Two-Way (per side)	Stackback One-Way	Stackback Two-Way (per side)	Stackback One-Way	Stackback Two-Way (per side)
18	11.75	8.75	10.5	8.5	10.5	8.5
24	13	9.25	11.75	8.75	10.5	8.5
30	15.75	10.5	13	9.25	11.75	8.75
36	17	11.25	14.5	10	13	9.25
42	18.5	12	15.75	10.5	14.5	10
48	19.75	12.5	17	11.25	14.5	10
54	22.25	14	18.5	12	15.75	10.5
60	23.75	14.5	19.75	12.5	17	11.25
66	25	15.25	21	13.25	18.5	12
72	26.25	16	22.25	14	18.5	12
78	29	17.25	23.75	14.5	19.75	12.5
84	30.25	18	25	15.25	21	13.25
90	31.5	18.5	26.25	16	22.25	14
96	33	19.25	27.5	16.5	22.25	14
102	35.5	20.5	29	17.25	23.75	14.5
108	36.75	21.25	30.25	18	25	15.25
114	38.25	21.75	31.5	18.5	26.25	16
120	39.5	22.5	33	19.25	26.25	16
126	42.25	23.75	34.25	19.75	27.5	16.5
132	43.5	24.5	35.5	20.5	29	17.25
138	44.75	25.25	36.75	21.25	30.25	18
144	46	25.75	38.25	21.75	30.25	18
150	48.75	27	39.5	22.5	31.5	18.5
156	50	27.75	40.75	23.25	33	19.25
162	51.5	28.5	42.25	23.75	34.25	19.75
168	52.75	29	43.5	24.5	34.25	19.75
174	55.25	30.5	44.75	25.25	35.5	20.5
180	56.75	31	46	25.75	36.75	21.25
186	58	31.75	47.5	26.5	38.25	21.75
192	59.25	32.5	48.75	27	38.25	21.75
198	62	33.75	50	27.75	39.5	22.5
204	63.25	34.5	51.5	28.5	40.75	23.25
210	64.5	35	52.75	29	42.25	23.75
216	66	35.75	54	29.75	42.25	23.75
222	68.5	37	55.25	30.5	43.5	24.5
228	69.75	37.75	56.75	31	44.75	25.25
234	71.25	38.25	58	31.75	46	25.75
240	72.5	39	59.25	32.5	46	25.75

Ripplefold™ Stack Guide for Butt Master 84111xxx

Note: Stack size is estimated. Type of fabric used could alter these measurements. Please refer to the Ripplefold Fabrication Manual for more information.

120% Fullness	100% Fullness	80% Fullness	60% Fullness	Number of factory snaps	Snap Tape Length (less return length)*	Panel Stackback
13⅝	15⅜	17⅛	18⅞	8	32½	5½
17⅜	19⅝	21⅞	24⅛	10	41	6½
21⅛	23⅞	26⅝	29⅜	12	49½	7½
24⅞	28⅛	31⅜	34⅝	14	58	8¾
28⅝	32⅜	36⅛	39⅞	16	66½	9¾
32⅜	36⅝	40⅞	45⅛	18	75	11
36⅛	40⅞	45⅝	50⅜	20	83½	12
39⅞	45⅛	50⅜	55⅝	22	92	13
45⅝	49⅜	55⅛	60⅞	24	100½	14¼
47⅜	53⅝	59⅞	66⅛	26	109	15¼
51⅛	57⅞	64⅝	71⅜	28	117½	16½
54⅞	62⅛	69⅜	76⅝	30	126	17½
58⅝	66⅜	74⅛	81⅞	32	134½	18½
62⅜	70⅝	78⅞	87⅛	34	143	19¾
66⅛	74⅞	83⅝	92⅜	36	151½	20¾
69⅞	79⅛	88⅜	97⅝	38	160	22
73⅝	83⅜	93⅛	102⅞	40	168½	23
77⅜	87⅝	97⅞	108⅛	42	177	24
81⅛	91⅞	102⅝	113⅜	44	185½	25¼
84⅞	96⅛	107⅜	118⅝	46	194	26¼
88⅝	100⅜	112⅛	123⅞	48	202½	27½
92⅜	104⅝	116⅞	129⅛	50	211	28½
96⅛	108⅞	121⅝	134⅜	52	219½	29½
99⅞	113⅛	126⅜	139⅝	52	228	30¾
103⅝	117⅜	131⅛	144⅞	54	236½	31¾
107⅜	121⅝	135⅞	150⅛	56	245	33
111⅛	125⅞	140⅝	155⅜	58	253½	34
114⅞	130⅛	145⅜	160⅝	60	262	35
118⅝	134⅜	150⅛	165⅞	62	270½	36¼
122⅜	138⅝	154⅞	171⅛	64	279	37¼
126⅛	142⅞	159⅝	176⅜	66	287½	38½
129⅞	147⅛	164⅜	181⅝	68	296	39 ½
133⅝	151⅜	169⅛	186⅞	70	304½	40½
137⅜	155⅝	173⅞	192⅛	72	313	41¾
141⅛	159⅞	178⅝	197⅜	74	321½	42¾
144⅞	164⅛	183⅜	202⅝	76	330	44

Ripplefold™ Stack Guide for Butt Master 84111xxx

Note: Stack size is estimated. Type of fabric used could alter these measurements. Please refer to the Ripplefold Fabrication Manual for more information.

120% Fullness	100% Fullness	80% Fullness	60% Fullness	Number of factory snaps	Snap Tape Length (less return length)*	Panel Stackback
148⅝	168⅜	188⅛	207⅞	78	338½	45
152⅜	176⅝	192⅞	213⅛	80	347	46
156⅛	176⅞	197⅝	218⅜	84	355½	47¼
159⅞	181⅛	202⅜	223⅝	86	364	48¼
163⅝	185⅜	207⅛	228⅞	88	372½	49½
167⅜	189⅝	211⅞	234⅛	90	381	50½
171⅛	193⅞	216⅝	239⅜	92	389½	51½
174⅞	198⅛	221⅜	244⅝	94	398	52¾
178⅝	202⅜	226⅛	249⅞	96	406½	53¾
182⅜	206⅝	230⅞	255⅛	98	415	55
186⅛	210⅞	235⅝	260⅜	100	423½	56
189⅞	215⅛	240⅜	265⅝	102	432	57
193⅝	219⅜	245⅛	270⅞	104	440½	58¼
197⅜	223⅝	249⅞	276⅛	106	449	59¼
201⅛	227⅞	254⅝	281⅜	108	457½	60½
204⅞	232⅛	259⅜	286⅝	110	466	61½
208⅝	236⅜	264⅛	291⅞	112	474½	62 ½
212⅜	240⅝	268⅞	297⅛	114	483	63¾
216⅛	244⅞	273⅝	302⅜	116	491½	64¾
219⅞	249⅛	278⅜	307⅝	118	500	66
223⅝	253⅜	283⅛	312⅞	120	508½	67
227⅜	257⅝	287⅞	318⅛	122	517	68
231⅛	261⅞	292⅝	323⅜	124	525½	69¼
234⅞	266⅛	297⅜	328⅝	126	534	70¼
238⅝	270⅜	302⅛	333⅞	128	542½	71½
242⅜	274⅝	306⅞	339⅛	130	551	72½
246⅛	278⅞	311⅝	344⅜	132	559½	73½
249⅞	283⅛	316⅜	349⅝	134	568	74¾
253⅝	287⅜	321⅛	354⅞	136	576½	75¾
257⅜	291⅝	325⅞	360⅛	138	585	77
261⅛	295⅞	330⅝	365⅜	140	593½	78
264⅞	300⅛	335⅜	370⅝	142	602	79
268⅝	304⅜	340⅛	375⅞	144	610½	80¼
272⅜	308⅝	344⅞	381⅛	146	619	81¼
276⅛	312⅞	349⅝	386⅜	148	627½	82½
279⅞	317⅛	354⅜	391⅝	150	636	83½

Ripplefold™ Stack Guide for Butt Master 84214xxx

Note: Stack size is estimated. Type of fabric used could alter these measurements. Please refer to the Ripplefold Fabrication Manual for more information.

120% Fullness	100% Fullness	80% Fullness	60% Fullness	Number of factory snaps	Snap Tape Length (less return length)*	Panel Stackback
14⅞	16⅜	17⅞	19⅜	8	32½	7½
18⅝	20⅝	22⅝	24⅝	10	41	8½
22⅜	24⅞	27⅜	29⅞	12	49½	9¾
26⅛	29⅛	32⅛	35⅛	14	58	10¾
29⅞	33⅜	36⅞	40⅜	16	66½	12
33⅝	37⅝	41⅝	45⅝	18	75	13
37⅜	41⅞	46⅜	50⅞	20	83½	14
41⅛	46⅛	51⅛	56⅛	22	92	15¼
44⅞	50⅜	55⅞	61⅜	24	100½	16¼
48⅝	54⅝	60⅝	66⅝	26	109	17½
52⅜	58⅞	65⅜	71⅞	28	117½	18½
56⅛	63⅛	70⅛	77⅛	30	126	19½
59⅞	67⅜	74⅞	82⅜	32	134½	20¾
63⅝	71⅝	79⅝	87⅝	34	143	21¾
67⅜	75⅞	84⅜	92⅞	36	151½	23
71⅛	80⅛	89⅛	98⅛	38	160	24
74⅞	84⅜	93⅞	103⅜	40	168½	25
78⅝	88⅝	98⅝	108⅝	42	177	26¼
82⅜	92⅞	103⅜	113⅞	44	185½	27¼
86⅛	97⅛	108⅛	119⅛	46	194	28½
89⅞	101⅜	112⅞	124⅜	48	202½	29½
93⅝	105⅝	117⅝	129⅝	50	211	30½
97⅜	109⅞	122⅜	134⅞	52	219½	31¾
101⅛	114⅛	127⅛	140⅛	54	228	32¾
104⅞	118⅜	131⅞	145⅜	56	236½	34
108⅝	122⅝	136⅝	150⅝	56	245	35
112⅜	126⅞	141⅜	155⅞	60	253½	36¼
116⅛	131⅛	146⅛	161⅛	62	262	37¼
119⅞	135⅜	150⅞	166⅜	64	270½	38¼
123⅝	139⅝	155⅝	171⅝	66	279	39½
127⅜	143⅞	160⅜	176⅞	68	287½	40½
131⅛	148⅛	165⅛	182⅛	70	296	41¾
134⅞	152⅜	169⅞	187⅜	72	304½	42¾
138⅝	156⅝	174⅝	192⅝	74	313	43¾
142⅜	160⅞	179⅜	197⅞	76	321½	45
146⅛	165⅛	184⅛	203⅛	78	330	46

Ripplefold™ Stack Guide for Butt Master 84214xxx

Note: Stack size is estimated. Type of fabric used could alter these measurements. Please refer to the Ripplefold Fabrication Manual for more information.

120% Fullness	100% Fullness	80% Fullness	60% Fullness	Number of factory snaps	Snap Tape Length (less return length)*	Panel Stackback
149⅞	169⅜	188⅞	208⅜	80	338½	47¼
153⅝	173⅝	193⅝	213⅝	82	347	48¼
157⅜	177⅞	198⅜	218⅞	84	355½	49½
161⅛	182⅛	203⅛	224⅛	86	364	50½
164⅞	186⅜	207⅞	229⅜	88	372½	51½
168⅝	190⅝	212⅝	234⅝	90	381	52¾
172⅜	194⅞	217⅜	239⅞	92	389½	53¾
176⅛	199⅛	222⅛	245⅛	94	398	55
179⅞	203⅜	226⅞	250⅜	96	406½	56
183⅝	207⅝	231⅝	255⅝	98	415	57
187⅜	211⅞	236⅜	260⅞	100	423½	58¼
191⅛	216⅛	241⅛	266⅛	102	432	59¼
194⅞	220⅜	245⅞	271⅜	104	440½	60½
198⅝	224⅝	250⅝	276⅝	106	449	61½
202⅜	228⅞	255⅜	281⅞	108	457½	62½
206⅛	233⅛	260⅛	287⅛	110	466	63¾
209⅞	237⅜	264⅞	292⅜	112	474½	64¾
213⅝	241⅝	269⅝	297⅝	114	483	66
217⅜	245⅞	274⅜	302⅞	116	491½	67
221⅛	250⅛	279⅛	308⅛	118	500	68¼
224⅞	254⅜	283⅞	313⅜	120	508½	69¼
228⅝	258⅝	288⅝	318⅝	122	517	70¼
232⅜	262⅞	293⅜	323⅞	124	525½	71½
236⅛	267⅛	298⅛	329⅛	126	534	72½
239⅞	271⅜	302⅞	334⅜	128	542½	73¾
243⅝	275⅝	307⅝	339⅝	130	551	74¾
247⅜	279⅞	312⅜	344⅞	132	559½	75¾
251⅛	284⅛	317⅛	350⅛	134	568	77
254⅞	288⅜	321⅞	355⅜	136	576½	78
258⅝	292⅝	326⅝	360⅝	138	585	79¼
262⅜	296⅞	331⅜	365⅞	140	593½	80¼
266⅛	301⅛	336⅛	371⅛	142	602	81¼
269⅞	305⅜	340⅞	376⅜	144	610½	82½
273⅝	309⅝	345⅝	381⅝	146	619	83½
277⅜	313⅞	350⅜	386⅞	148	627½	84¾
281⅛	318⅛	355⅛	392⅛	150	636	85¾

Ripplefold™ Overlap Stack Guide

Note: Stack size is estimated. Type of fabric used could alter these measurements. Please refer to the Ripplefold Fabrication Manual for more information.

120% Fullness	100% Fullness	80% Fullness	60% Fullness	Number of factory snaps	Snap Tape Length (less return length)*	Panel Stackback
16¼	17¾	19⅛	20¾	8	34	9
20	22	23⅞	26	10	42½	10¼
23¾	26¼	28⅝	31¼	12	51	11¼
27½	20½	33⅜	26½	14	59½	12½
31¼	34¾	38⅛	41¾	16	68	13½
35	39	42⅞	47	18	76½	14½
38¾	43¼	47⅝	52¼	20	85	15¾
42½	47½	52⅜	57½	22	93½	16¾
46¼	51¾	57⅛	62¾	24	102	18
50	56	61⅞	68	26	110½	19
53¾	60¼	66⅝	73¼	28	119	20
57½	64½	71⅜	78½	30	127½	21¼
61¼	68¾	76⅛	83¾	32	136	22¼
65	73	80⅞	89	34	144½	23½
68¾	77¼	85⅝	94¼	36	153	24½
72½	81½	90⅜	99½	38	161½	25½
76¼	85¾	95⅛	104¾	40	170	26¾
80	90	99⅞	110	42	178½	27¾
83¾	94¼	104⅝	115¼	44	187	29
87½	98½	109⅜	120½	46	195½	30
91¼	102¾	114⅛	125¾	48	204	31
95	107	118⅞	131	50	212½	32¼
98¾	111¼	123⅝	136¼	52	221	33¼
102½	115½	128⅜	141½	54	229½	34½
106¼	119¾	133⅛	146¾	56	238	35½
110	124	137⅞	152	56	246½	36½
113¾	128¼	142⅝	157¼	60	255	37¾
117½	132½	147⅜	162½	62	263½	38¾
121¼	136¾	152⅛	167¾	64	272	40
125	141	156⅞	173	66	280½	41
128¾	145¼	161⅝	178¼	68	289	42
132½	149½	166⅜	183½	70	297½	43¼
136¼	153¾	171⅛	188¾	72	306	44¼
140	158	175⅞	194	74	314½	45½
143¾	162¼	180⅝	199¼	76	323	46½
147½	166½	185⅜	204½	78	331½	47½

Ripplefold™ Overlap Stack Guide

Note: Stack size is estimated. Type of fabric used could alter these measurements. Please refer to the Ripplefold Fabrication Manual for more information.

120% Fullness	100% Fullness	80% Fullness	60% Fullness	Number of factory snaps	Snap Tape Length (less return length)*	Panel Stackback
151¼	170¼	190⅛	209¾	80	340	48¾
155	175	194⅞	215	82	348½	49¾
158¾	179¼	199⅝	220¼	84	357	51
162½	183½	204⅜	225½	86	365½	52
166¼	187¾	209⅛	230¾	88	374	53
170	192	213⅞	236	90	382½	54¼
173¾	196¼	218⅝	241¼	92	391	55¼
177½	200½	223⅜	246½	94	399½	56½
181¼	204¾	228⅛	251¾	96	408	57½
185	209	232⅞	257	98	416½	58½
188¾	213¼	237⅝	262¼	100	425	59¾
192½	217½	242⅜	267½	102	433½	60¾
196¼	221¾	247⅛	272¾	104	442	62
200	226	251⅞	278	106	450½	63
203¾	230¼	256⅝	283¼	108	459	64
207½	234½	261⅜	288½	110	467½	65¼
211¼	238¾	266⅛	293¾	112	476	66¼
215	243	270⅞	299	114	484½	67½
218¾	247¼	275⅝	304¼	116	493	68½
222½	251½	280⅜	309½	118	501½	69½
226¼	255¾	285⅛	314¾	120	510	70¾
230	260	289⅞	320	122	518½	71¾
233¾	264¼	294⅝	325¼	124	527	73
237½	268½	299⅜	330½	126	535½	74
241¼	272¾	304⅛	335¾	128	544	75
245	277	308⅞	341	130	552½	76¼
248¾	281¼	313⅝	346¼	132	561	77¼
252½	285½	318⅜	351½	134	569½	78½
256¼	289¾	323⅛	356¾	136	578	79½
260	294	327⅞	362	138	586½	80½
263¾	298¼	332⅝	367¼	140	595	81¾
267½	302½	337⅜	372½	142	603½	82¾
271¼	306¾	342⅛	377¾	144	612	84
275	311	346⅞	383	146	620½	85
278¾	315¼	351⅝	388¼	148	629	86
282½	319½	356⅜	393½	150	637½	87¼

Pole Installation, Cutting & Splicing

Top Hole Installation Guide

This chart will position the bracket so the drapery will clear the floor approximately ½".

1. Find your pole style, size and header style in the chart.
2. Determine the desired finished drapery length.
3. Add or subtract number in the top hole column from the drapery's finished length to determine how high to measure for the top hole of the bracket.

Stationary Poles	Rod Pocket (no top ruffle)	Pleated (any variety)	
	Top Hole	Top Hole	Pin Set
1⅜" Standard Bracket	-1 13/16"	+1 9/16"	¼"
1⅜" Decorative Bracket	-1¼"	+2⅛"	¼"
2" Standard Bracket	-2 3/16"	+2⅜"	¼"

Wall Mount Traverse Rods	Pleated (any variety)			Ripplefold™ (any fullness)	
	Top Hole for Wall Mount	Floor to Ceiling Deduction	Suggested Pin Set	Top Hole for Wall Mount	Floor to Ceiling Deduction
1⅜" Estate™	+1 11/16"	-2⅛"	½"	+1 11/16"	-2⅛"
2" Estate™	+1 11/16"	-2 13/16"	½"	+1 11/16"	-2 13/16"
Ceiling Mount Traverse Rods					
1⅜" Estate™	+0"	-3⅝"	½"	+0"	-3⅝"
2" Estate™	+0"	-3⅝"	½"	+0"	-3⅝"

Cutting & Splicing Wood Trends™ Poles

- Measure to desired length and carefully wrap area with an easy peel, blue painter's tape as not to damage the finish.
- Cut through the tape with sharp fine tooth saw. Cut slowly to reduce any chipping to the product finish.
- Drill a new finial pilot hole. Find rod center easily by drawing an X across the diameter of the pole using a ⅛" drill bit.
- Splice with pole connector. Always support the splice with a bracket.

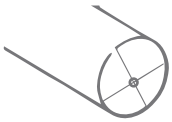

Find rod center by marking X across diameter of pole.

Pole Connector #5610E061

Wood Elbow Configuration

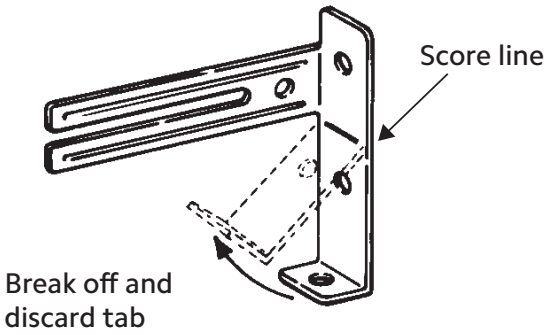

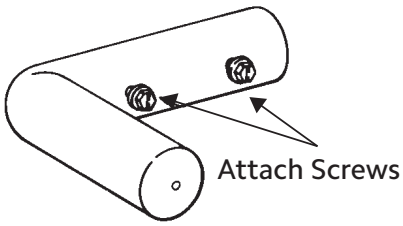

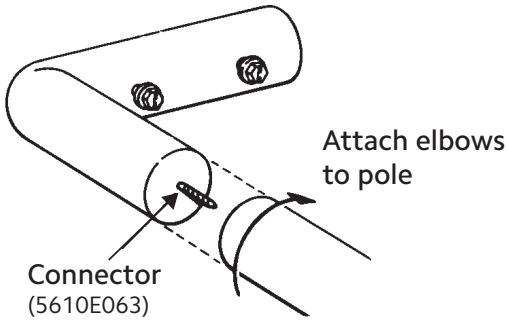

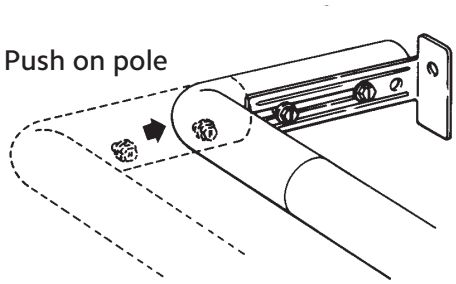

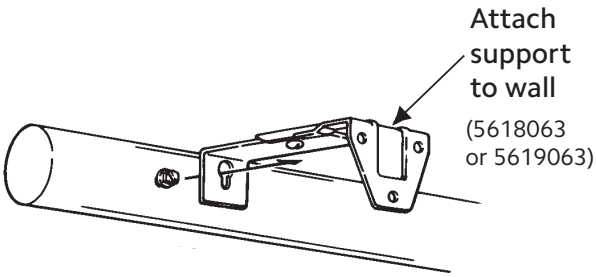

Learn more about all of our collections

				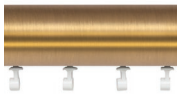
	Designer Metals™ Collection sophisticated styles acrylic and metals striking finishes	**Wood Trends™ Collection** crafted timelessness beautiful finishes classic designs	**Wrought Iron Collection** architectural statement remarkable history real wrought iron	**Estate™ Traverse Rods Collection** form meets function innovative solutions customizable
Available Diameters	1" 1⅜" & 2"	1⅜" & 2"	1" & 1⅜"	**1⅜"** Wrought Iron **1⅜" & 2"** Designer Metals™ Wood Trends™
Pole Lengths	Fixed - 4', 6' & 8' Telescoping - 36"-180"	4', 6', 8', 12'	6' & 8'	18"-16'
Pole Material	Metal	Wood	Metal	Wood & Metal
Operation Modes	Stationary, Traversing Manual or Motorized Draw	Stationary, Traversing Manual or Motorized Draw	Stationary, Traversing Manual or Motorized Draw	Traversing Manual or Motorized Draw
Pole Sizing	Fixed Width & Telescoping	Fixed Width	Fixed Width	Cut to Measure
Finishes	8	9	6	62
Finials	27	18	18	106
Bracket Types	Decorative Fixed & Bypass Fixed	Decorative Fixed	Decorative Fixed & Bypass Fixed	Concealed Adjustable
Bracket Sizes	3" – 8¾", Inside Mount & Ceiling Mount	3½" – 7", Inside Mount & Ceiling Mount	3½" – 6½" & Inside Mount	1¾" – 3¼"
Treatment Styles	Stationary & Traversing	Stationary & Traversing	Stationary & Traversing	Traversing

Designer Metals | Stratta in Brushed Bronze

Wood Trends | Chaucer in Estate Oak, Black

Wrought Iron | Darby in Graphite, Heirloom Copper

PRODUCT NO.	PAGE
1026660	16, 30
1026661	16, 30
1026662	16, 30
1026663	16, 30
36807025	8
36807059	8
36807083	8
36807091	8
36807820	8
36807825	8
36807830	8
36807835	8
36807841	8
36808025	10
36808059	10
36808083	10
36808091	10
36808820	10
36808825	10
36808830	10
36808835	10
36808841	10
36814025	8
36814059	8
36814083	8
36814091	8
36814820	8
36814825	8
36814830	8
36814835	8
36814841	8
36815025	8
36815059	8
36815083	8
36815091	8
36815820	8
36815825	8
36815830	8
36815835	8
36815841	8
36816025	9
36816059	9
36816083	9
36816091	9
36816820	9
36816825	9
36816830	9
36816835	9
36816841	9
36817025	9
36817059	9
36817083	9
36817091	9

PRODUCT NO.	PAGE
36817820	9
36817825	9
36817830	9
36817835	9
36817841	9
46807025	23
46807059	23
46807083	23
46807091	23
46807820	23
46807825	23
46807830	23
46807835	23
46807841	23
46808025	25
46808059	25
46808083	25
46808091	25
46808820	25
46808825	25
46808830	25
46808835	25
46808841	25
46813025	23
46813059	23
46813083	23
46813091	23
46813820	23
46813825	23
46813830	23
46813835	23
46813841	23
46814025	23
46814059	23
46814083	23
46814091	23
46814820	23
46814825	23
46814830	23
46814835	23
46814841	23
46815025	23
46815059	23
46815083	23
46815091	23
46815820	23
46815825	23
46815830	23
46815835	23
46815841	23
46816025	24
46816059	24
46816083	24

PRODUCT NO.	PAGE
46816091	24
46816820	24
46816825	24
46816830	24
46816835	24
46816841	24
46817025	24
46817059	24
46817083	24
46817091	24
46817820	24
46817825	24
46817830	24
46817835	24
46817841	24
46850025	32
46850059	32
46850083	32
46850820	32
46850825	32
46850830	32
46850835	32
46850841	32
46855025	19
46855059	19
46855083	19
46855820	19
46855825	19
46855830	19
46855835	19
46855841	19
46865025	35
46865059	35
46865083	35
46865820	35
46865825	35
46865830	35
46865835	35
46865841	35
550012G025	28
550012G059	28
550012G083	28
550012G091	28
550012G820	28
550012G825	28
550012G830	28
550012G835	28
550012G841	28
55004G025	27
55004G059	27
55004G083	27
55004G091	27
55004G820	27

PRODUCT NO.	PAGE
55004G825	27
55004G830	27
55004G835	27
55004G841	27
55006G025	27
55006G059	27
55006G083	27
55006G091	27
55006G820	27
55006G825	27
55006G830	27
55006G835	27
55006G841	27
55008G025	28
55008G059	28
55008G083	28
55008G091	28
55008G820	28
55008G825	28
55008G830	28
55008G835	28
55008G841	28
550112G025	28
550112G059	28
550112G083	28
550112G091	28
550112G820	28
550112G825	28
550112G830	28
550112G835	28
550112G841	28
55014G025	27
55014G059	27
55014G083	27
55014G091	27
55014G820	27
55014G825	27
55014G830	27
55014G835	27
55014G841	27
55016G025	27
55016G059	27
55016G083	27
55016G091	27
55016G820	27
55016G825	27
55016G830	27
55016G835	27
55016G841	27
55018G025	28
55018G059	28
55018G083	28
55018G091	28

PRODUCT NO.	PAGE
55018G820	28
55018G825	28
55018G830	28
55018G835	28
55018G841	28
5502EG025	31
5502EG059	31
5502EG083	31
5502EG091	31
5502EG820	31
5502EG825	31
5502EG830	31
5502EG835	31
5502EG841	31
5503EG025	32
5503EG059	32
5503EG083	32
5503EG091	32
5503EG820	32
5503EG825	32
5503EG830	32
5503EG835	32
5503EG841	32
5506EG025	33
5506EG059	33
5506EG083	33
5506EG091	33
5506EG820	33
5506EG825	33
5506EG830	33
5506EG835	33
5506EG841	33
5508EG025	24
5508EG059	24
5508EG083	24
5508EG091	24
5508EG820	24
5508EG825	24
5508EG830	24
5508EG835	24
5508EG841	24
5509EG025	24
5509EG059	24
5509EG083	24
5509EG091	24
5509EG820	24
5509EG825	24
5509EG830	24
5509EG835	24
5509EG841	24
5511EG025	32
5511EG059	32
5511EG083	32

PRODUCT NO.	PAGE
5511EG091	32
5511EG820	32
5511EG825	32
5511EG830	32
5511EG835	32
5511EG841	32
5513091	33
5517091	33
5520EG025	32
5520EG059	32
5520EG083	32
5520EG820	32
5520EG825	32
5520EG830	32
5520EG835	32
5520EG841	32
560012G025	12
560012G059	12
560012G083	12
560012G091	12
560012G820	12
560012G825	12
560012G830	12
560012G835	12
560012G841	12
56004G025	11
56004G059	11
56004G083	11
56004G091	11
56004G820	11
56004G825	11
56004G830	11
56004G835	11
56004G841	11
56006G025	11
56006G059	11
56006G083	11
56006G091	11
56006G820	11
56006G825	11
56006G830	11
56006G835	11
56006G841	11
56008G025	12
56008G059	12
56008G083	12
56008G091	12
56008G820	12
56008G825	12
56008G830	12
56008G835	12
56008G841	12
560112G025	12

PRODUCT NO.	PAGE
560112G059	12
560112G083	12
560112G091	12
560112G820	12
560112G825	12
560112G830	12
560112G835	12
560112G841	12
56014G025	11
56014G059	11
56014G083	11
56014G091	11
56014G820	11
56014G825	11
56014G830	11
56014G835	11
56014G841	11
56016G025	11
56016G059	11
56016G083	11
56016G091	11
56016G820	11
56016G825	11
56016G830	11
56016G835	11
56016G841	11
56018G025	12
56018G059	12
56018G083	12
56018G091	12
56018G820	12
56018G825	12
56018G830	12
56018G835	12
56018G841	12
5602BB025	17
5602BB059	17
5602BB083	17
5602BB091	17
5602BB820	17
5602BB825	17
5602BB830	17
5602BB835	17
5602BB841	17
5602EG025	17
5602EG059	17
5602EG083	17
5602EG091	17
5602EG820	17
5602EG825	17
5602EG830	17
5602EG835	17
5602EG841	17

PRODUCT NO.	PAGE
5605BB063	35
5605EG025	20
5605EG059	20
5605EG083	20
5605EG091	20
5605EG820	20
5605EG825	20
5605EG830	20
5605EG835	20
5605EG841	20
5606E025	20
5606E059	20
5606E083	20
5606E091	20
5606E820	20
5606E825	20
5606E830	20
5606E835	20
5606E841	20
5608EG025	9
5608EG059	9
5608EG083	9
5608EG091	9
5608EG820	9
5608EG825	9
5608EG830	9
5608EG835	9
5608EG841	9
5609EG025	9
5609EG059	9
5609EG083	9
5609EG091	9
5609EG820	9
5609EG825	9
5609EG830	9
5609EG835	9
5609EG841	9
5610E061	35
5611BB025	18
5611BB059	18
5611BB083	18
5611BB091	18
5611BB820	18
5611BB825	18
5611BB830	18
5611BB835	18
5611BB841	18
5611EG025	18
5611EG059	18
5611EG083	18
5611EG091	18
5611EG820	18
5611EG825	18

PRODUCT NO.	PAGE
5611EG830	18
5611EG835	18
5611EG841	18
5613E091	20
5614EG025	18
5614EG059	18
5614EG083	18
5614EG091	18
5614EG820	18
5614EG825	18
5614EG830	18
5614EG835	18
5614EG841	18
5617091	20
5618063	21, 34
5619063	21, 34
5620EG025	19
5620EG059	19
5620EG083	19
5620EG820	19
5620EG825	19
5620EG830	19
5620EG835	19
5620EG841	19
5623063	21, 34
5629G025	8
5629G059	8
5629G083	8
5629G820	8
5629G825	8
5629G830	8
5629G835	8
5629G841	8
5691G025	18
5691G059	18
5691G083	18
5691G091	18
5691G820	18
5691G825	18
5691G830	18
5691G835	18
5691G841	18
62101000	16, 30
62101010	16, 30
62102000	16, 30
62108000	16, 30
62109000	16, 30
62201300	16, 30
71132006	13, 29
71132012	13, 29
71132062	13, 29
71132110	13, 29
71134110	13, 29

PRODUCT NO.	PAGE
84990000	35
94675025	13
94675059	13
94675083	13
94675820	13
94675825	13
94675830	13
94675835	13
94675841	13
94676025	13
94676059	13
94676083	13
94676820	13
94676825	13
94676830	13
94676835	13
94676841	13
95675025	29
95675059	29
95675083	29
95675091	29
95675820	29
95675825	29
95675830	29
95675835	29
95675841	29
95676025	29
95676059	29
95676083	29
95676091	29
95676820	29
95676825	29
95676830	29
95676835	29
95676841	29

KIRSCH®
DRAPERY HARDWARE

Designer Metals™
inspiring brilliance

Wood Trends™
renewing traditions

Wrought Iron
forging artistry

Custom Rodding
& Basic Hardware
unique solutions

510956