BILL OF MATERIAL

	QTY.	DESCRIPTION	SUPPLIER	ESTM. COST	ITEM NO.
R5	1	4 POLE BARRIER STRIP	T.B.D.	$4	52
R5	1	8 POLE BARRIER STRIP	T.B.D.	$4	53
R6	6	20x80 END CAP	3D PRINTED PART	$0	54
R6	2	20x60 END CAP	3D PRIINTED PART	$0	55
R6	1	SPINDLE MOUNT OFFSET PLATE,0.50 X 3.00 X 8.00	MILLED PART	$8	56
* R6	2	EXTREME V WHEEL ASSY - FULL SIZE	OPENBUILDS	$6	57
R6	1	X AND Z BARRIER STRIP OFFSET PLATE	MILLED PART	$2	58
R6	1	CHUCK BELT COVER TOP	3D PRINTED PART	$0	59
R6	1	CHUCK BELT COVER SIDE	3D PRINTED PART	$0	60
* R6	1	Eccentric Spacer (SKU EccentricSpacer)	OPENBUILDS	$2	61
* R6	2	Low Profile Screw M5 x 30 (SKU 125-pack)	OPENBUILDS	$0.19	62
R6	2	ALUMINUM,0.25 IN. THK X 35mm X 80mm LONG	MILLED PART	$2	63
R6	2	ALUMINUM ,0.12 IN. THK X 20mm X 80mm LONG	MILLED PART	$2	64
R6	8	SCREW, PAN HEAD, #8 (.164)-32UNC X 3.00	T.B.D.	$0.15	65
R6	8	NUT, HEX, #8-32UNC	T.B.D.	$0.15	66
* R6	1	ALUMINUM SPACER,6mm (SKU 90-Pack)	OPENBUILDS	$0.30	67

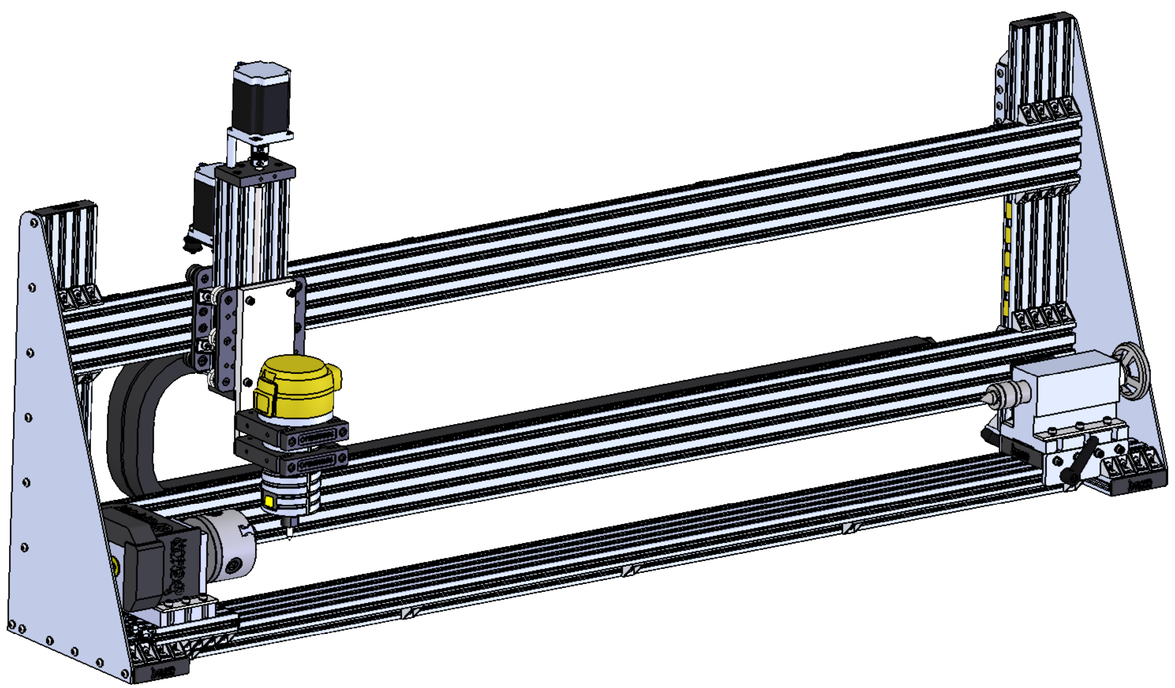

BILL OF MATERIAL

	QTY.	DESCRIPTION	SUPPLIER	ESTM. COST	ITEM NO.
*	2	V-Slot 20x80 Linear Rail - 250mm	OPENBUILDS	$6	1
*	3	V-Slot 20x80 Linear Rail - 1500mm	OPENBUILDS	$32	2
*	2	V-Slot 20x80 Linear Rail - 500mm	OPENBUILDS	$11	3
*	1	V-Slot 20x80 Linear Rail - 250mm CUT TO 120mm	OPENBUILDS	$6	4
*	2	V-Slot 20x80 Linear Rail - 250mm CUT TO 60mm	OPENBUILDS	$3	5
*	2	V-Slot 20x60 Linear Rail - 250mm CUT TO 120mm	OPENBUILDS	$2.75	6
*	1	GANTRY PLATE SUB ASSEMBLY	OPENBUILDS	$41.12	7
*	1	XL C-Beam Linear Actuator Bundle - 250mm	OPENBUILDS	$141	8
	2	SIDE PLATE,0.125 X 9.65 X 20.47 - MILLED PART	MILLED PART	$15	9
	2	ALUMINUM BAR,0.125 IN. THK X 0.75 IN. X 80mm LONG	MILLED PART	$1	10
	2	ALUMINUM BAR,0.125 IN. THK X 0.75 IN. X 120mm LONG	MILLED PART	$1	11
	2	ALUMINUM BAR,0.25 IN. THK X 2.50 IN. X 120mm LONG	MILLED PART	$3	12
	124	CAST CORNER BRACKET	AMAZON	$1.50	13
	1	DEWALT 611	T.B.D.	$120	14
	1	TAIL STOCK (INCLUDED WITH ROTARY AXIS)	AMAZON	(SEE ROTARY)	15
	1	ROTARY AXIS - 100mm - 3 JAW	AMAZON	$330	16
*	2	Router/Spindle Mount	OPENBUILDS	$32	17
*	1	MOTOR MOUNT,NEMA 17 AND 23	INVENTABLES	$10	18
	2	269oz STEPPER MOTOR	AMAZON	$35	19
	2	SMOOTH IDLER PULLEY	OPENBUILDS	$5.50	20
	1	3GT (GT2-3M) Timing Pulley - 20 Tooth - .250" Bore - 9mm Belt	OPENBUILDS	$7	21
	2	9MM 3GT3 BELT END CLIPS	DBP	$10	22
	2	M5 CLAMPING LEVER HANDLE	VARIES	$3	23
	2	T BOLT, M5-.8 X 16mm	VARIES	$0.35	24
	2	SCREW,BUTTON HD CAP,M5-0.8 X 8	T.B.D.	$0.10	25
	286	SCREW,BUTTON HD CAP,M5-0.8 X 10	T.B.D.	$0.10	26
	2	SCREW,BUTTON HD CAP,M5-0.8 X 12	T.B.D.	$0.13	27
*	8	Low Profile Screw M5 x 12 (SKU 2190-pack)	OPENBUILDS	$0.15	28
	1	SCREW,BUTTON HD CAP,M5-0.8 X 14	T.B.D.	$0.13	31
	8	SCREW,SOCKET HEAD,M5-.8 X 14	T.B.D.	$0.25	30
	2	SCREW,SOCKET HEAD,M5-.8 X 16	T.B.D.	$0.25	31
	4	SCREW,SOCKET HEAD,M5-.8 X 20	T.B.D.	$0.25	32
	6	SCREW,SOCKET HEAD,M5-.8 X 25	T.B.D.	$0.25	33
	8	SCREW,SOCKET HEAD,M5-.8 X 30	T.B.D.	$0.20	34
	1	SCREW,BUTTON HD CAP,M5-0.8 X 30	T.B.D.	$0.20	35
	9	WASHER,FLAT,M5	T.B.D.	$0.05	36
*	2	Precision Shim - 10x5x1mm (SKU 5)	OPENBUILDS	$0.30	37
	315	WASHER,LOCK,REGULAR,M5	T.B.D.	$0.08	38
	304	M5 T NUT	T.B.D.	$0.20	39
	8	NUT,LOCK,M5 X 0.8	T.B.D.	$0.10	40
	1	UPPER DRAG CHAIN BRACKET	MILLED PART	$1	41
	1	LOWER DRAG CHAIN BRACKET	MILLED PART	$1	42
R3	2	V-Slot 20x40 Linear Rail - 1500mm CUT TO 1300mm	OPENBUILDS	$21	43
R3	3	20mm X 15mm DRAG CHAIN - 1000mm LENGTH	T.B.D.	$13	44
R3	1	UPPER DRAG CHAIN CABLE GUIDE	MILLED PART	$2	45
R3	1	UPPER DRAG CHAIN CABLE GUIDE OFFSET BRACKET	MILLED PART	$1	46
R3	4	SCREW,SOCKET HEAD FLAT M4-0.7 X 16	T.B.D.	$0.12	47
R3	4	NUT,LOCK,M4	T.B.D.	$0.10	48
R4	3	DRAG CHAIN SUPPORT BRACKET	MILLED PART	$1	49
R5	15	MOTOR CABLE CLIP	3D PRINTED PART	$0	50
R5	5	RELAY WIRE COVER	3D PRINTED PART	$0	51

* = OPENBUILDS OR INVENTABLES PROPRIETARY ITEMS. ALL OTHER ITEMS CAN BE SOURCED FROM MULTIPLE PLACES.

R3 = ITEMS ADDED REV 03

R4 = ITEMS ADDED REV 04

R5 = ITEMS ADDED REV 05

R6 = ITEMS ADDED REV 06

DESIGNS BY Phil .com

REV 06 - ROTARY DEMON CNC ©

DESIGNED BY PHIL JOHNSON | TOTAL WEIGHT = 81.11

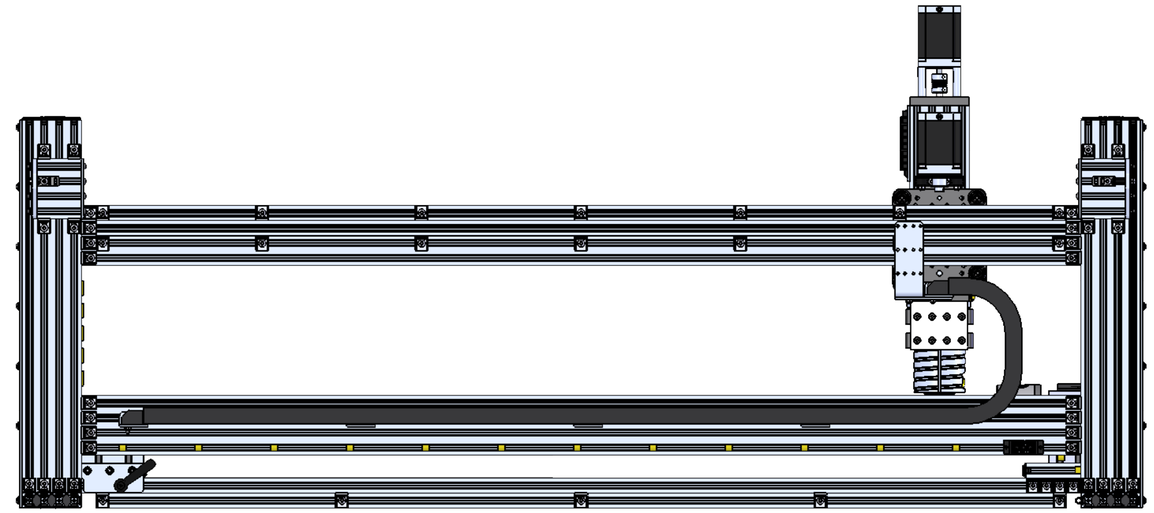

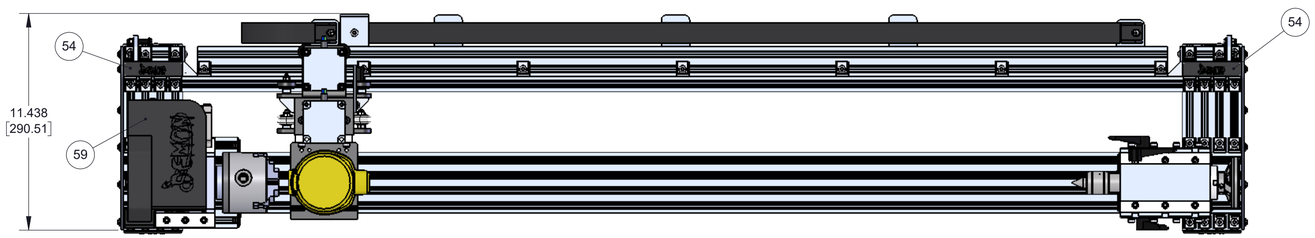

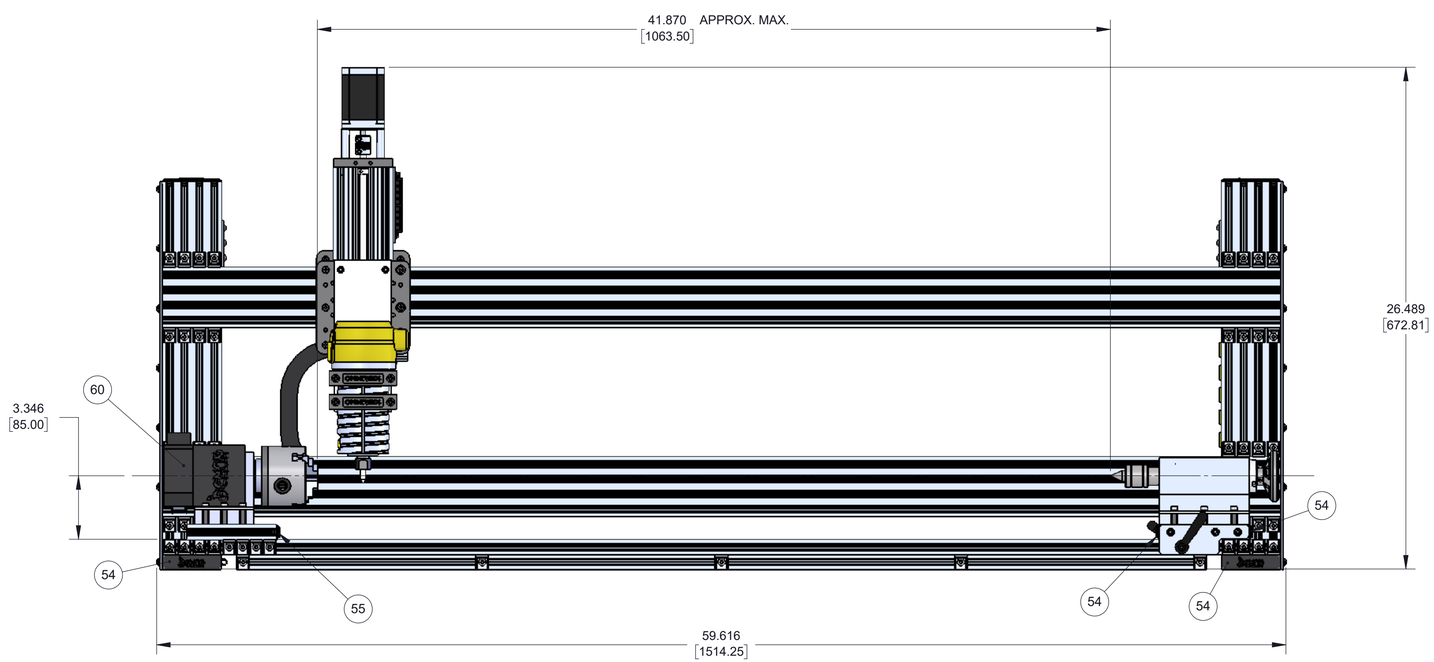

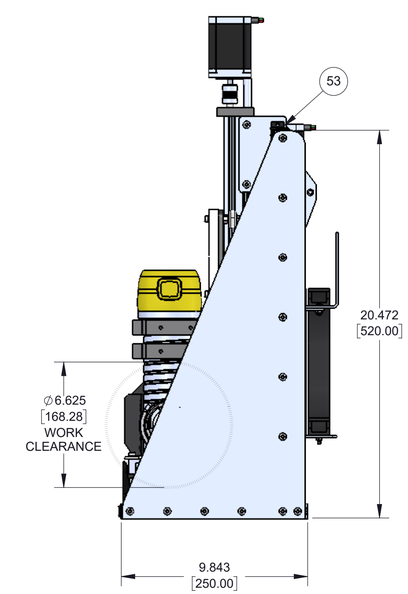

DESIGNS BY Phil .com

PG: 2
OF: 10

REV 06 - ROTARY DEMON CNC™ © | DESIGNED BY PHIL JOHNSON | TOTAL WEIGHT = 81.11

MAIN L BASE FRAME ASSEMBLY

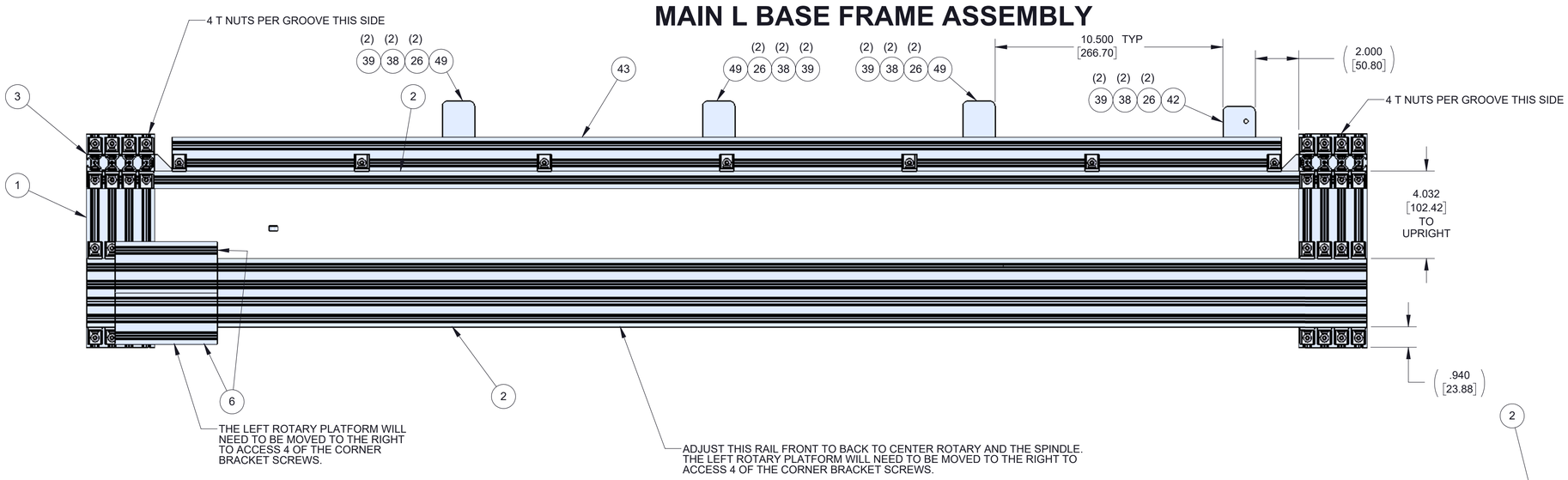

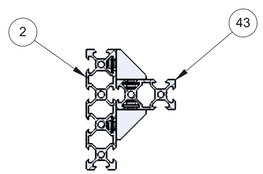

SECTION B-B
SCALE 1 : 2

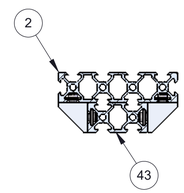

SECTION K-K
SCALE 1 : 2

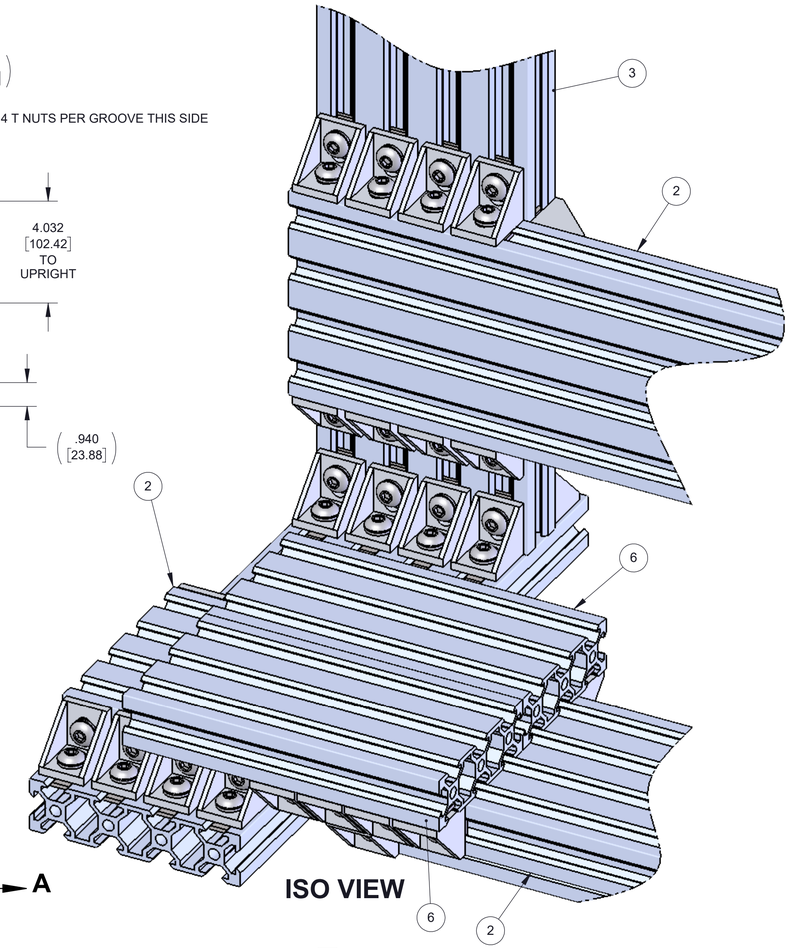

ISO VIEW

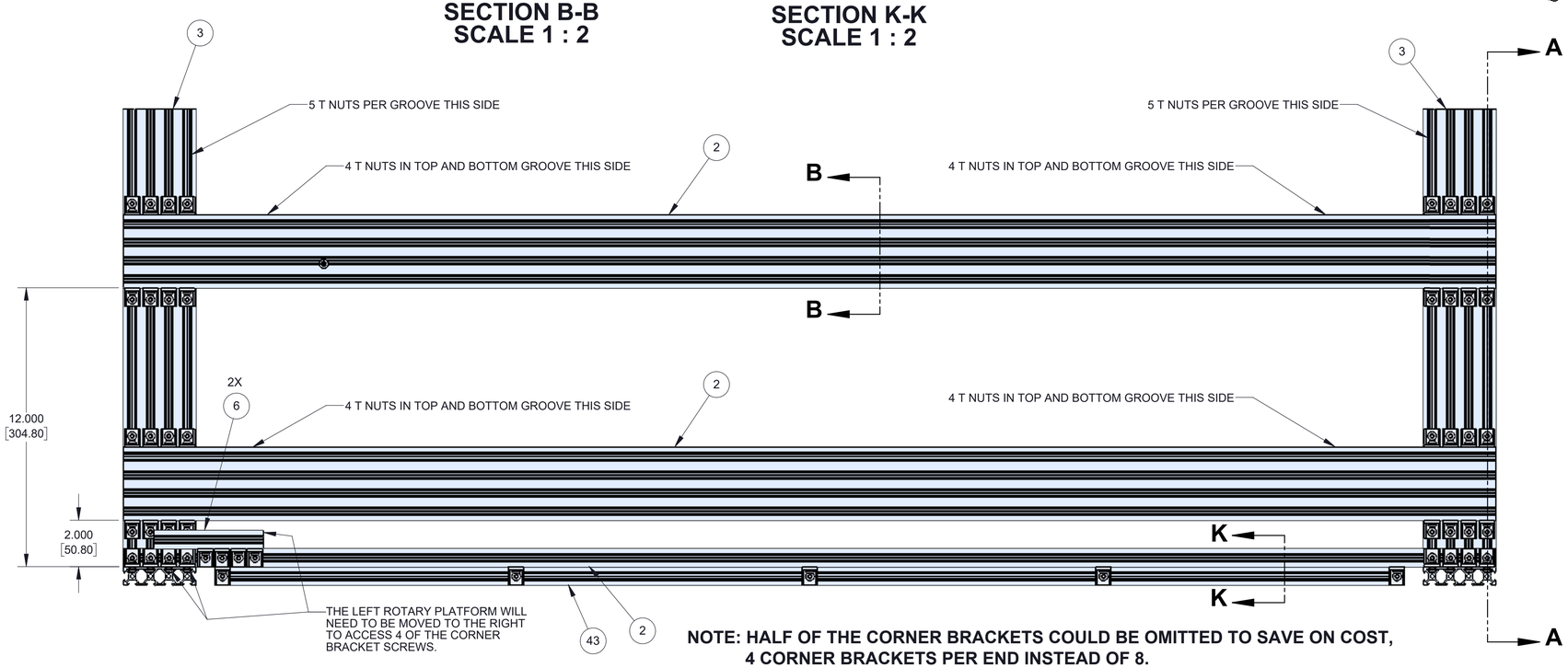

NOTE: HALF OF THE CORNER BRACKETS COULD BE OMITTED TO SAVE ON COST, 4 CORNER BRACKETS PER END INSTEAD OF 8.

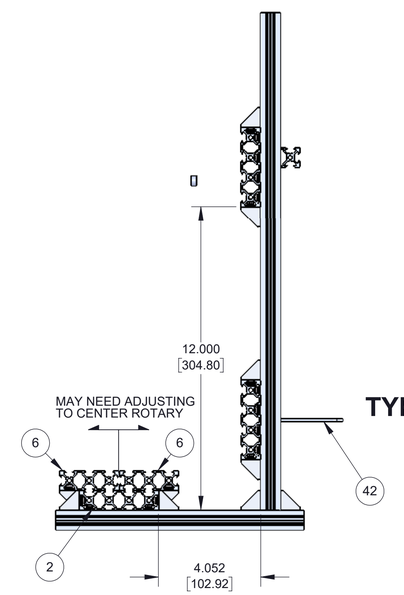

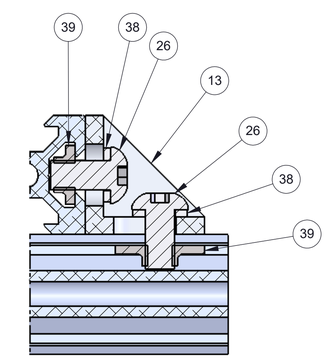

TYPICAL CORNER BRACKET
SECTION A-A
SCALE 2 : 2

DESIGNS BY Phil .com

PG: 3
OF: 10

REV 06 - ROTARY DEMON CNC™ © | DESIGNED BY PHIL JOHNSON | TOTAL WEIGHT = 81.11

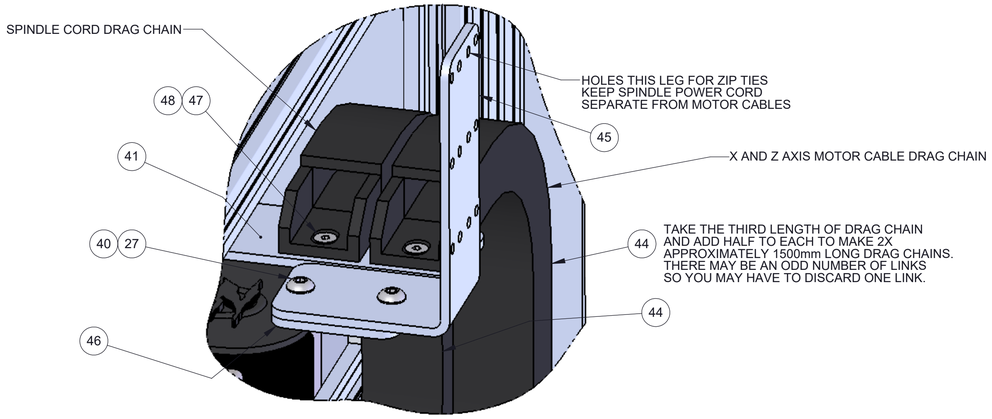

REAR VIEW OF UPPER DRAG CHAIN ASSEMBLY

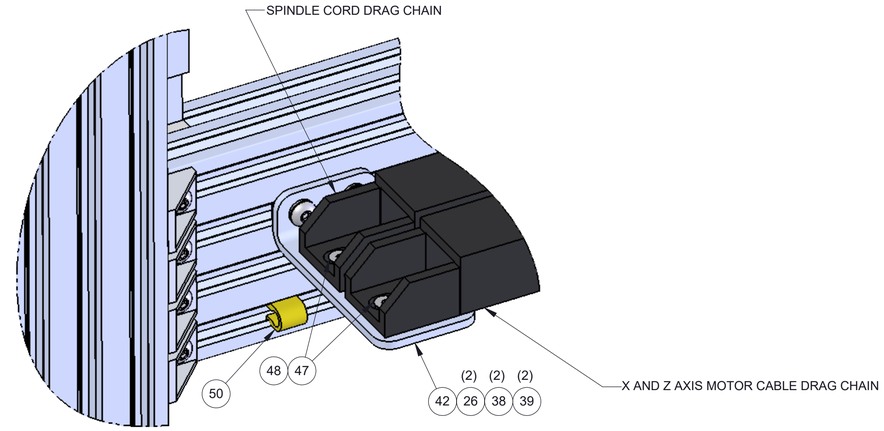

REAR VIEW OF LOWER DRAG CHAIN ASSEMBLY

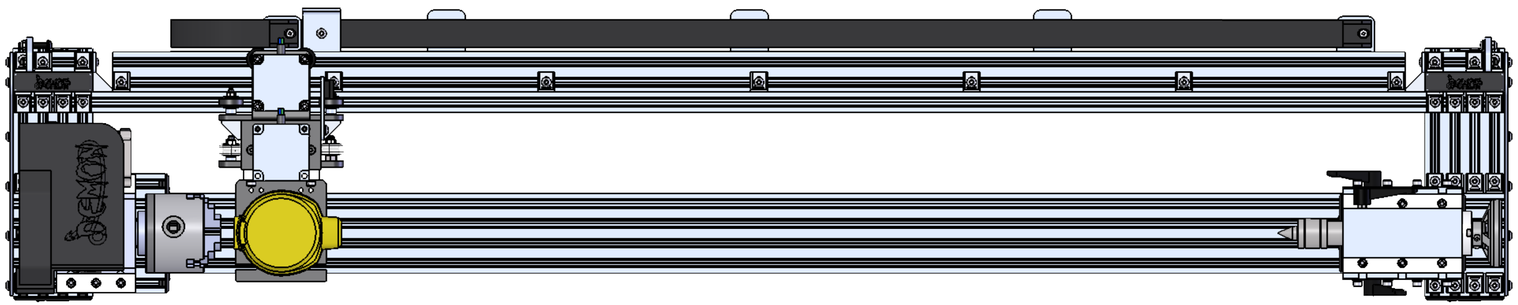

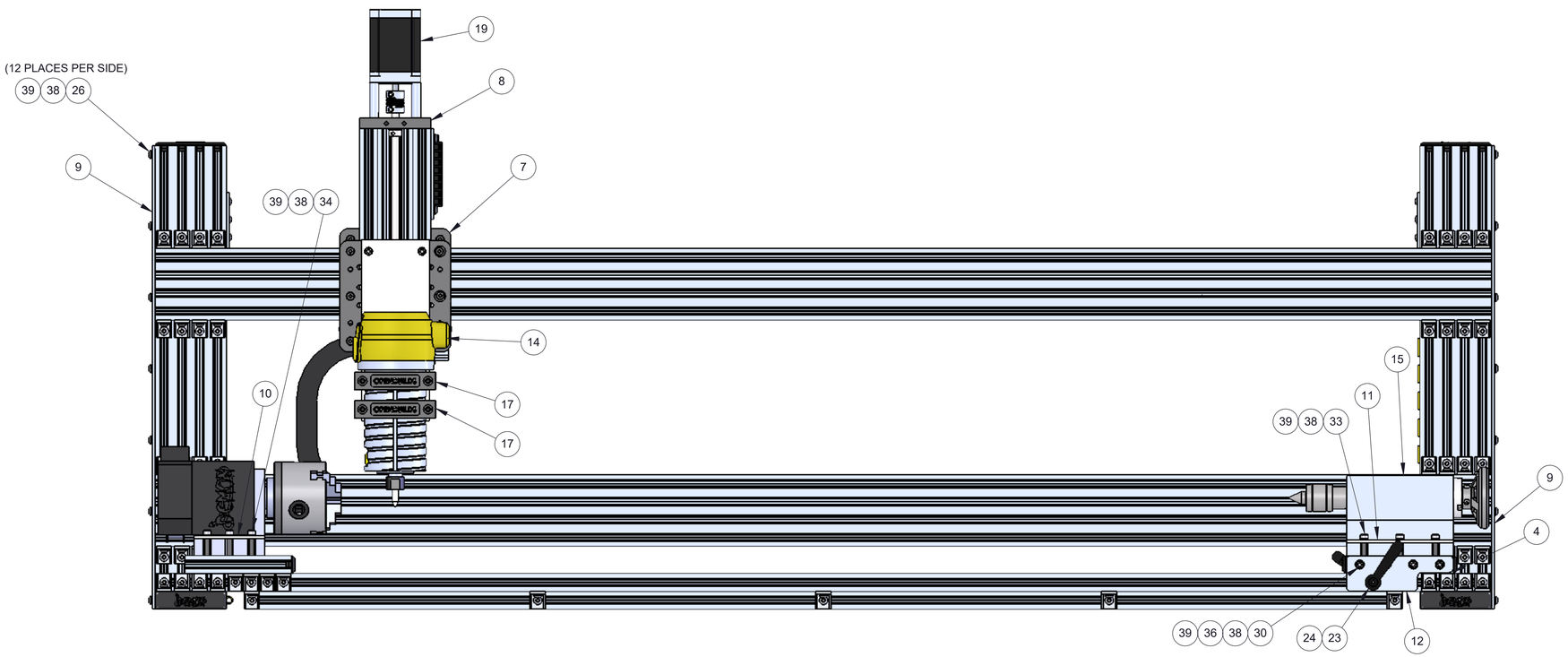

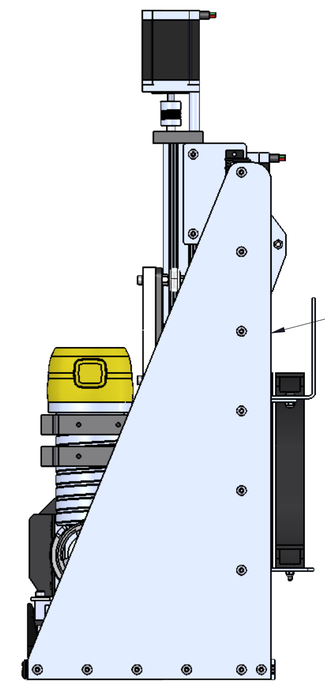

DESIGNS BY Phil .com

PG: 4
OF: 10

REV 06 - ROTARY DEMON CNC | DESIGNED BY PHIL JOHNSON | TOTAL WEIGHT = 81.11

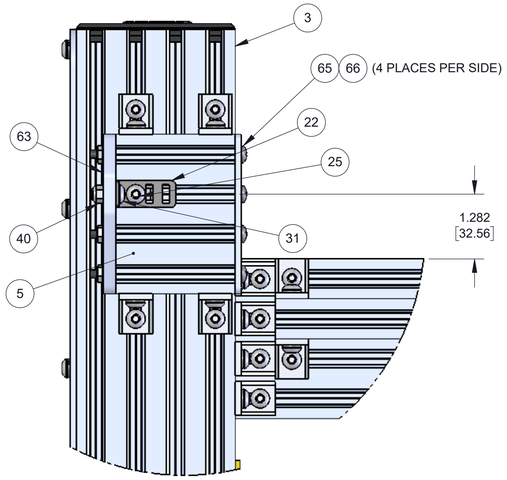

DETAIL D
SCALE 2 : 3

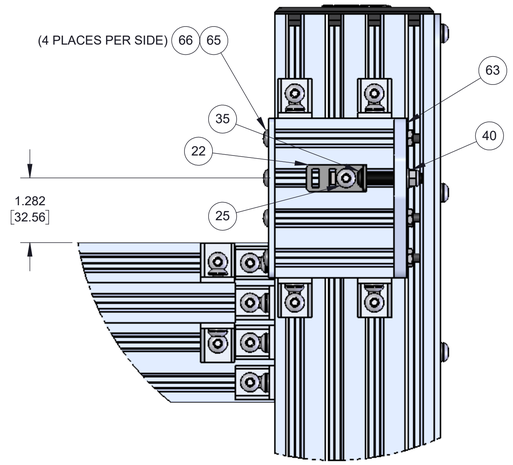

DETAIL E
SCALE 2 : 3

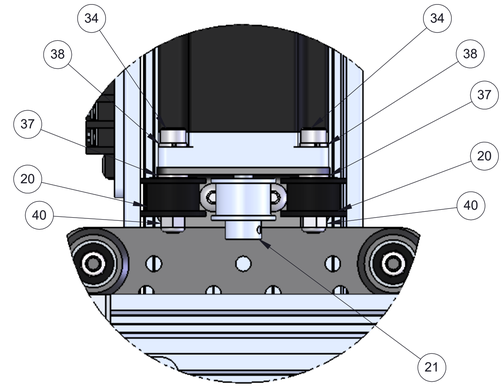

DETAIL F
SCALE 1 : 1

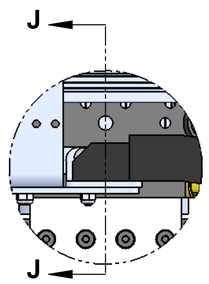

DETAIL H
SCALE 2 : 3

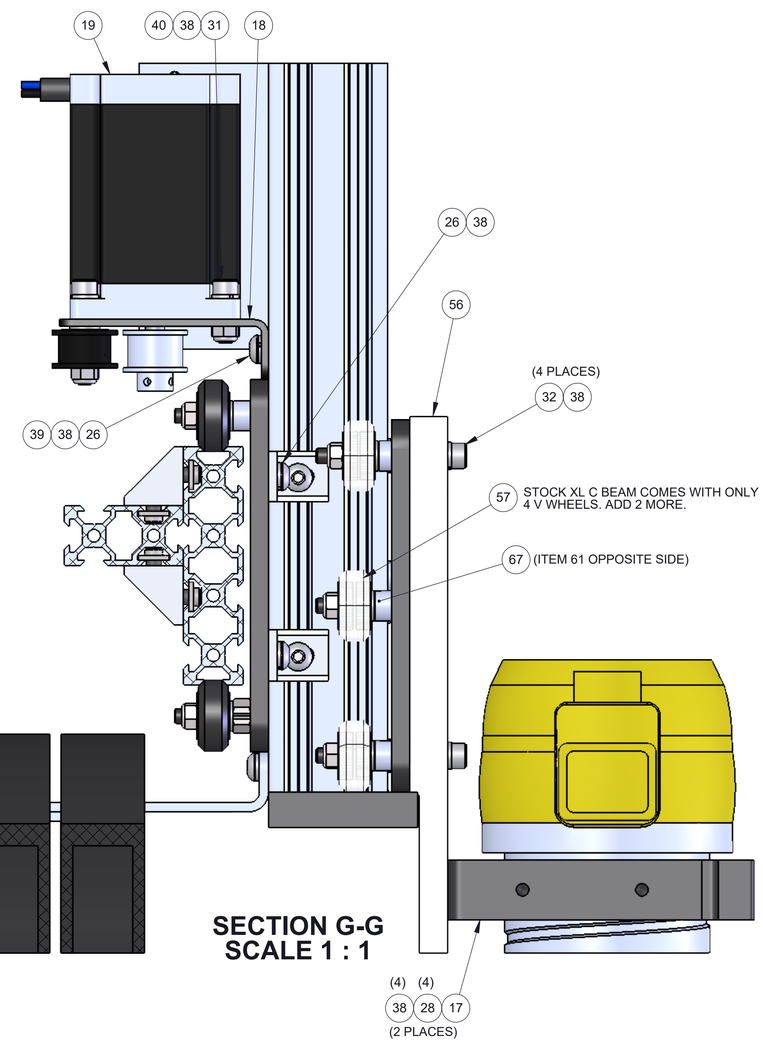

SECTION G-G
SCALE 1 : 1

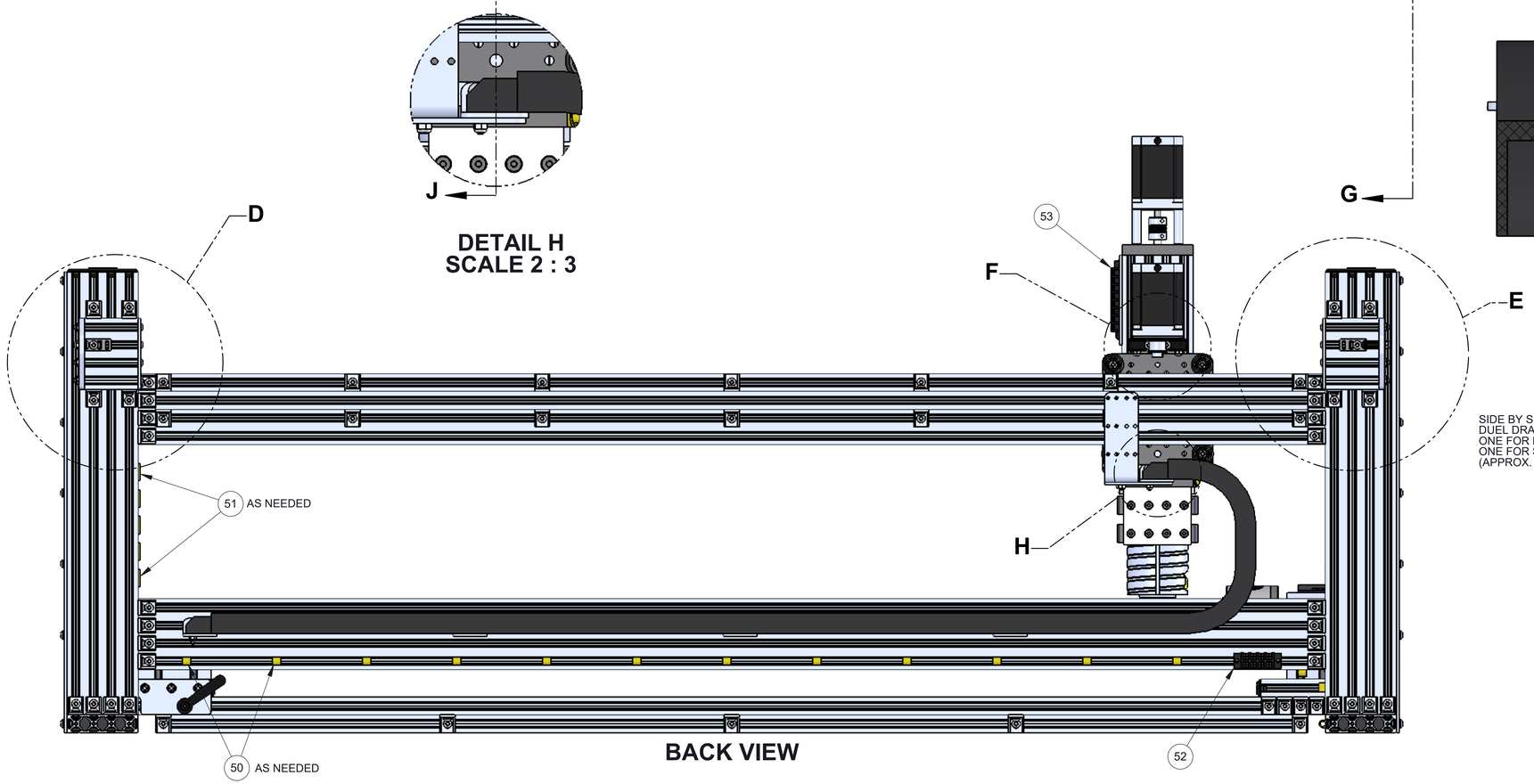

BACK VIEW

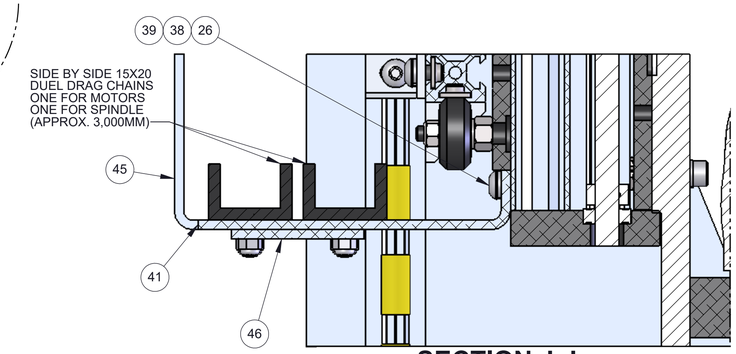

SECTION J-J
SCALE 1 : 1

DESIGNS BY Phil .com

PG: 5
OF: 10

REV 06 - ROTARY DEMON CNC © | DESIGNED BY PHIL JOHNSON | TOTAL WEIGHT = 81.11

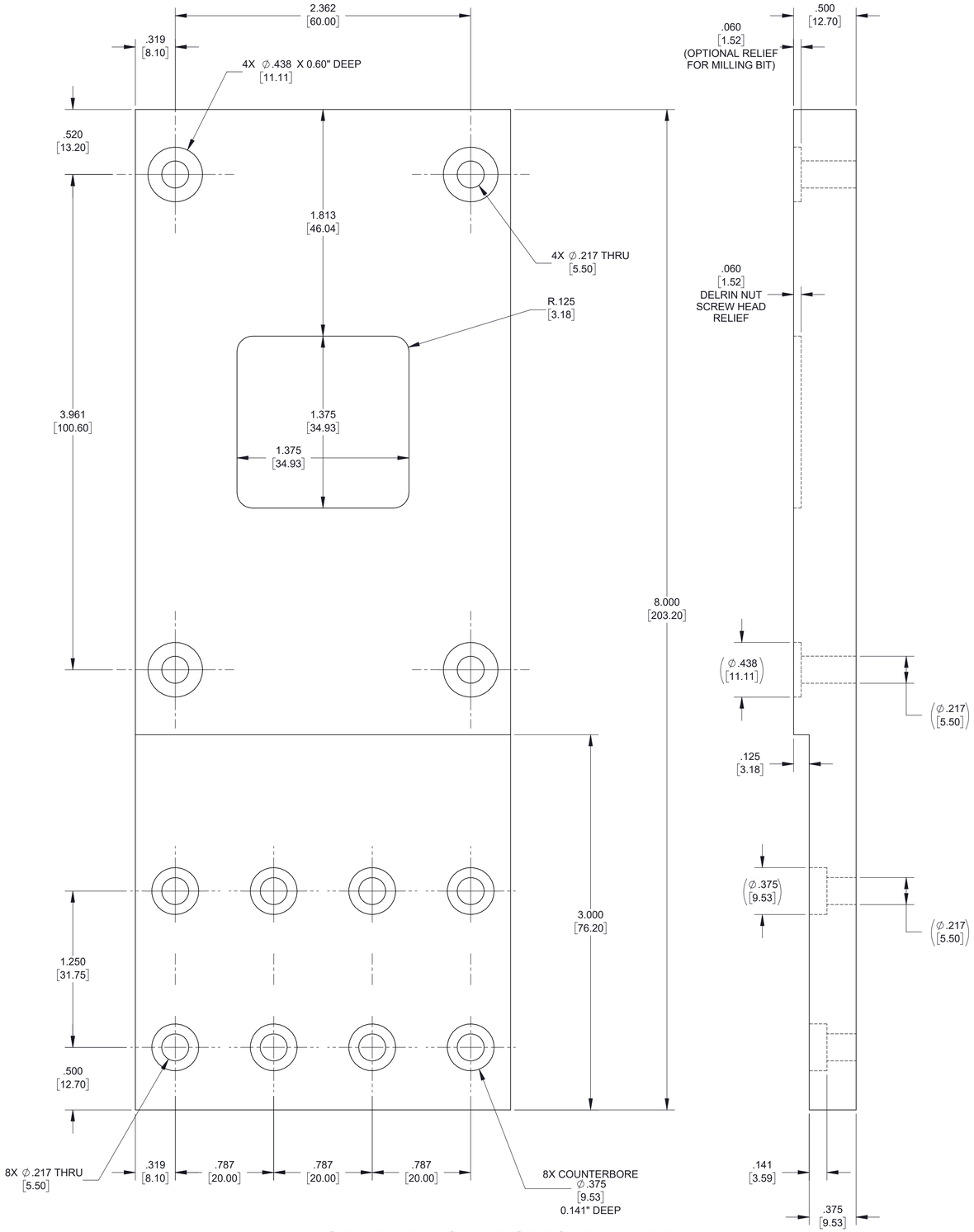

SPINDLE MOUNT OFFSET PLATE
(STEP, STL, & DXF FILE INCLUDED)
ITEM 56

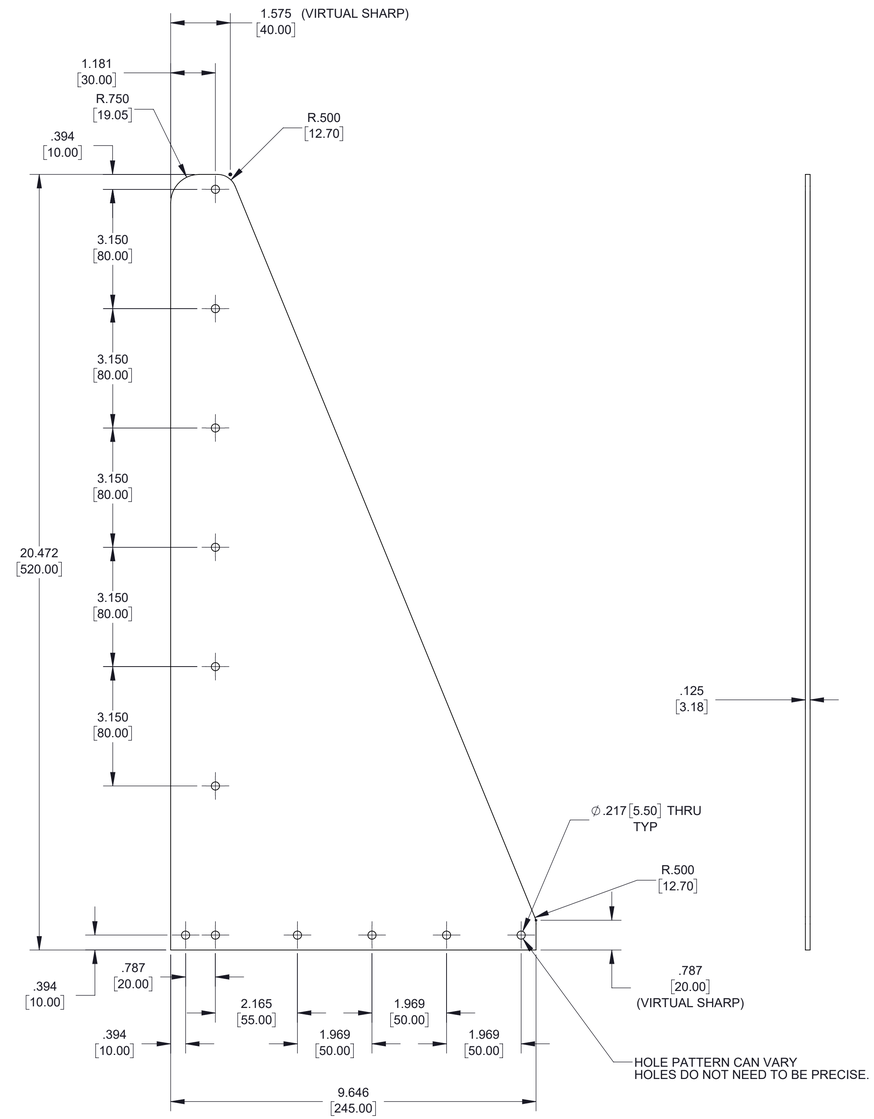

SIDE PLATE
(DXF FILE INCLUDED)
ITEM 9

DESIGNS BY Phil .com

PG: 6
OF: 10

REV 06 - ROTARY DEMON CNC | DESIGNED BY PHIL JOHNSON | TOTAL WEIGHT = 1.43

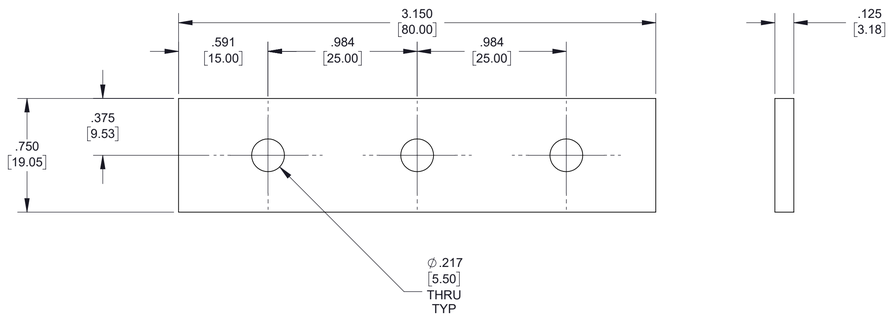

ROTARY CLAMP PLATE
(PART WILL VARY DEPENDING ON ROTARY)
ITEM 10

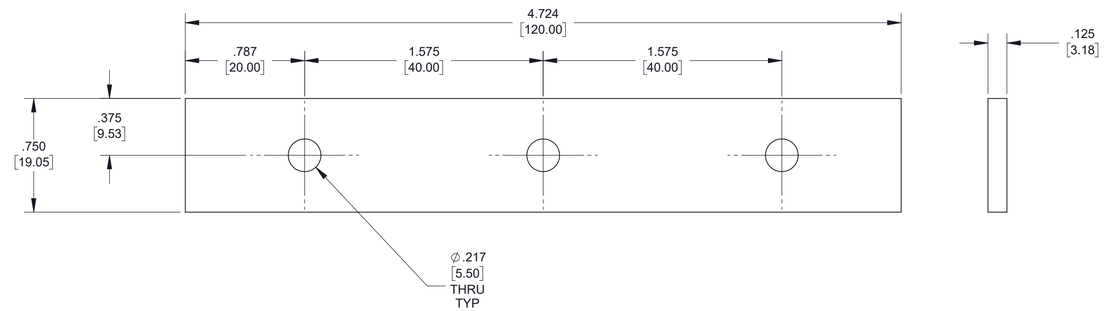

TAIL STOCK CLAMP PLATE
(PART WILL VARY DEPENDING ON TAIL STOCK)
ITEM 11

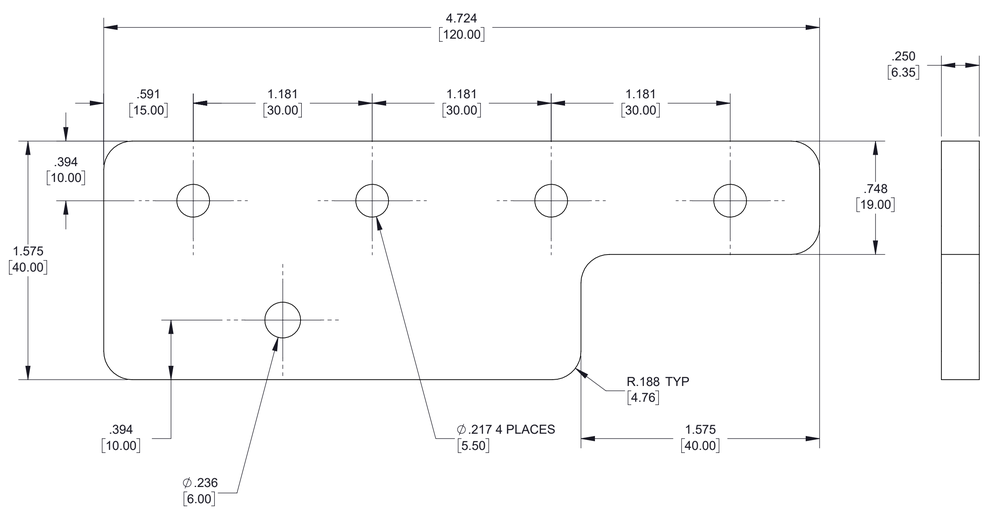

TAIL STOCK CLAMP PLATE
(DXF FILE INCLUDED)
ITEM 12

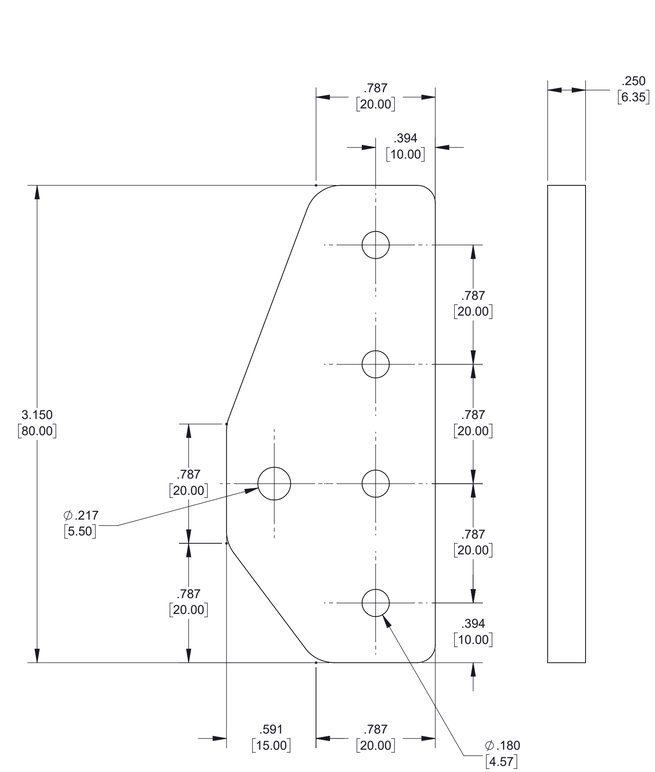

BELT END PLATE
(DXF FILE INCLUDED)
ITEM 63

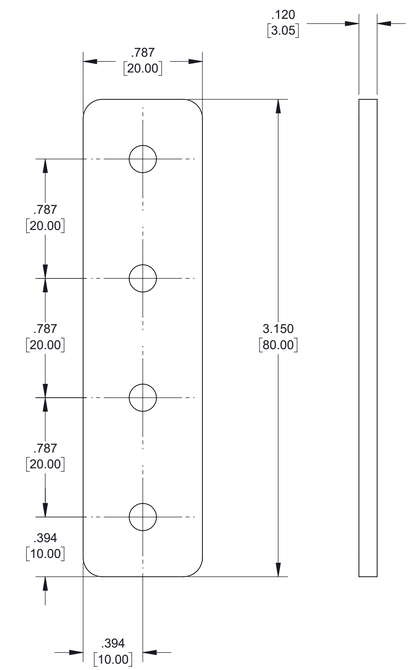

BELT EXTRUSION COVER PLATE
(DXF FILE INCLUDED)
ITEM 64

DESIGNS BY Phil.com

REV 06 - ROTARY DEMON CNC | DESIGNED BY PHIL JOHNSON | TOTAL WEIGHT = 0.08

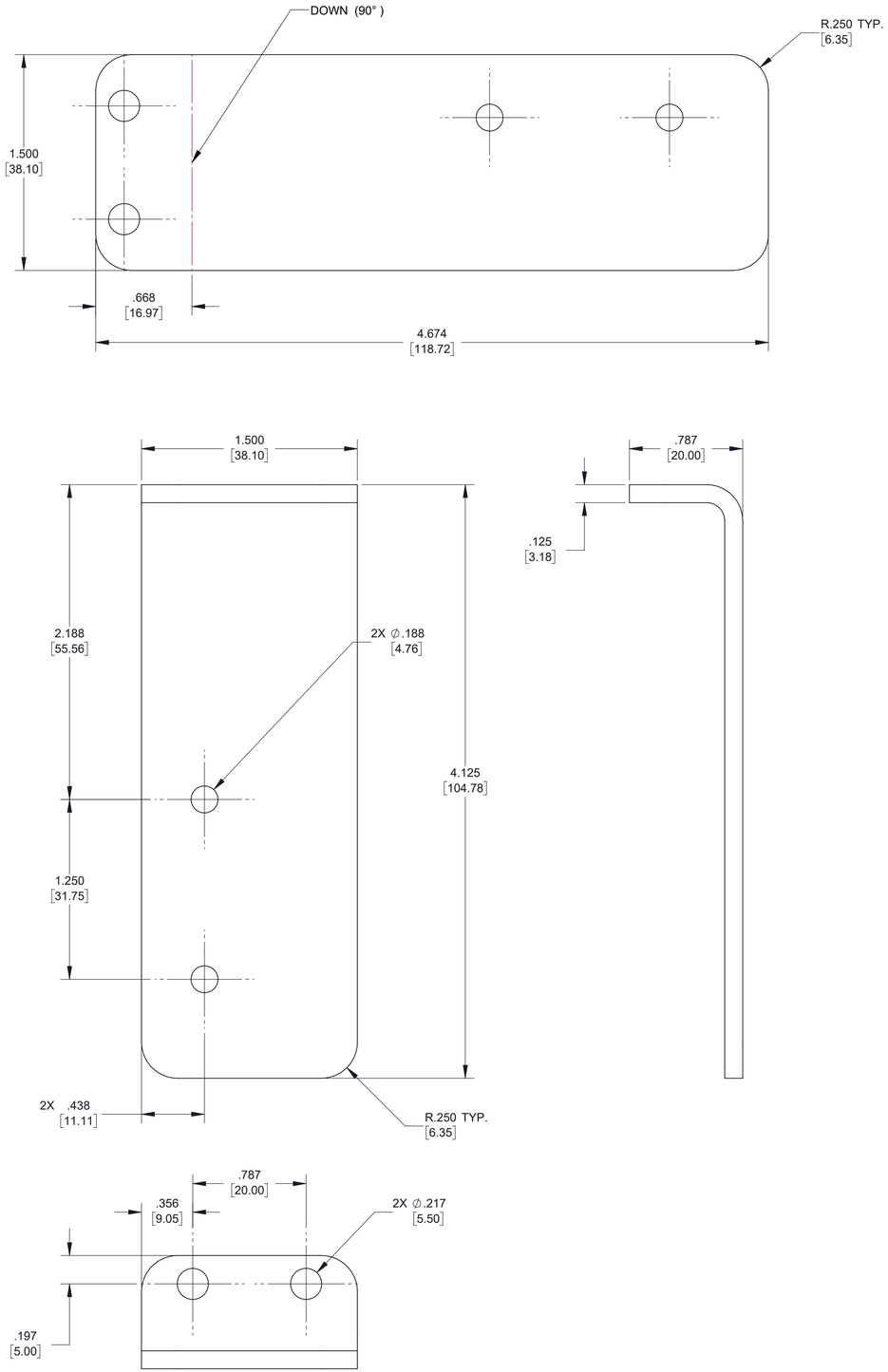

UPPER DRAG CHAIN BRACKET
(DXF FILE INCLUDED)
ITEM 41

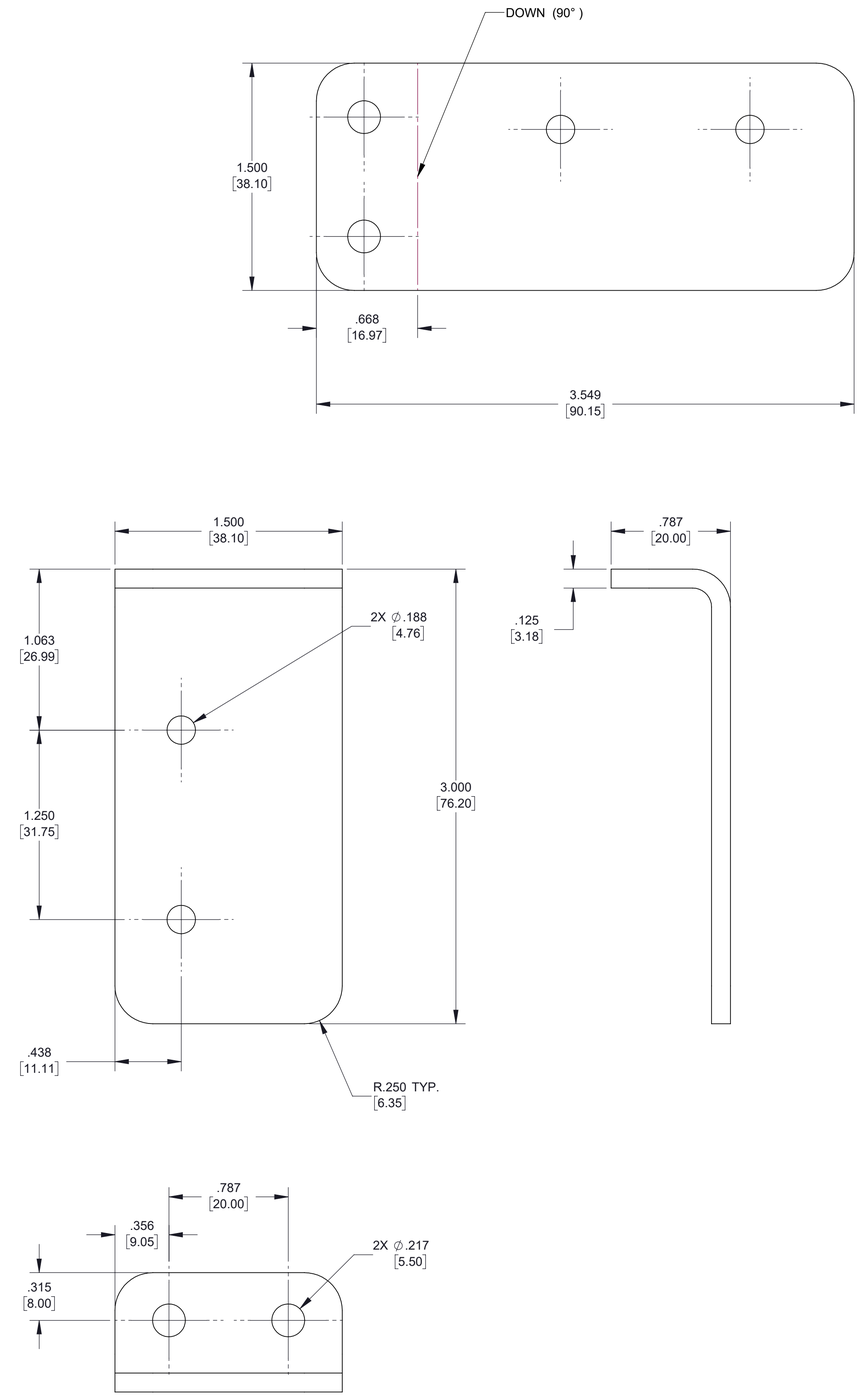

LOWER DRAG CHAIN BRACKET
(DXF FILE INCLUDED)
ITEM 42

DESIGNS BY Phil .com

REV 06 - ROTARY DEMON CNC ™ © | DESIGNED BY PHIL JOHNSON | TOTAL WEIGHT = 0.08

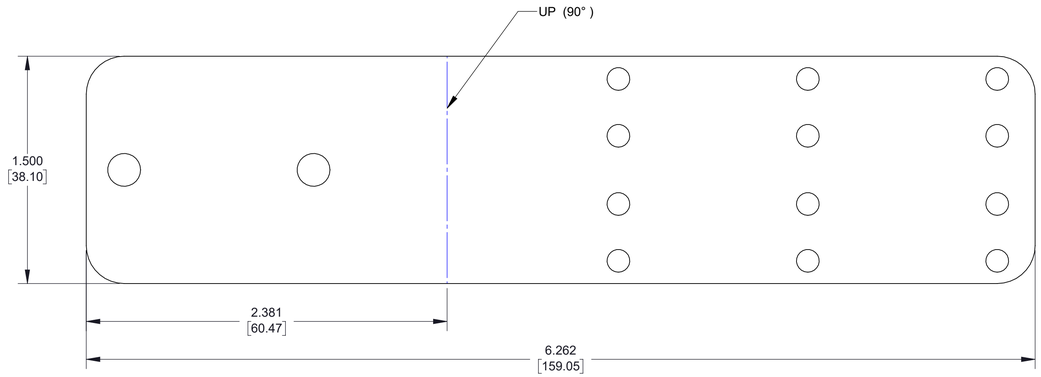

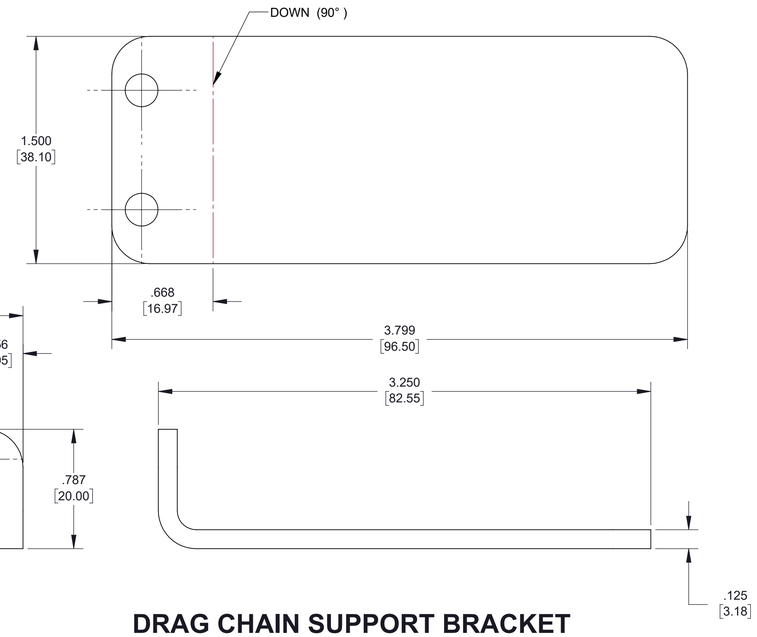

DRAG CHAIN SUPPORT BRACKET
(DXF FILE INCLUDED)
ITEM 49

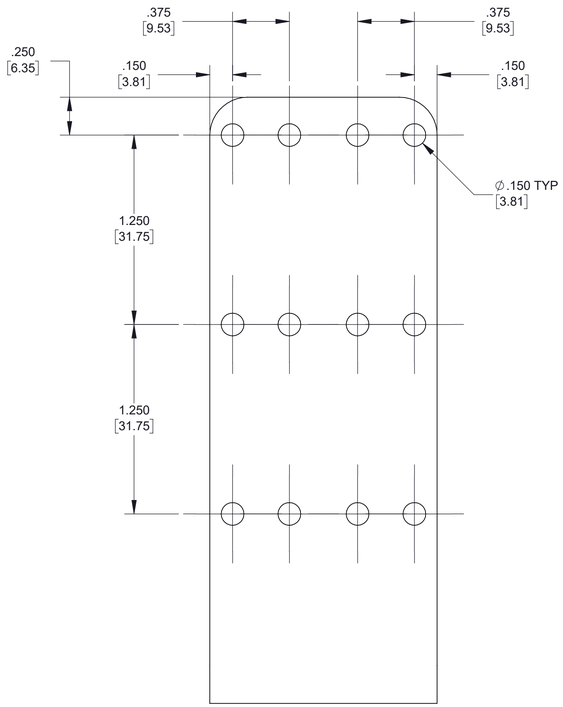

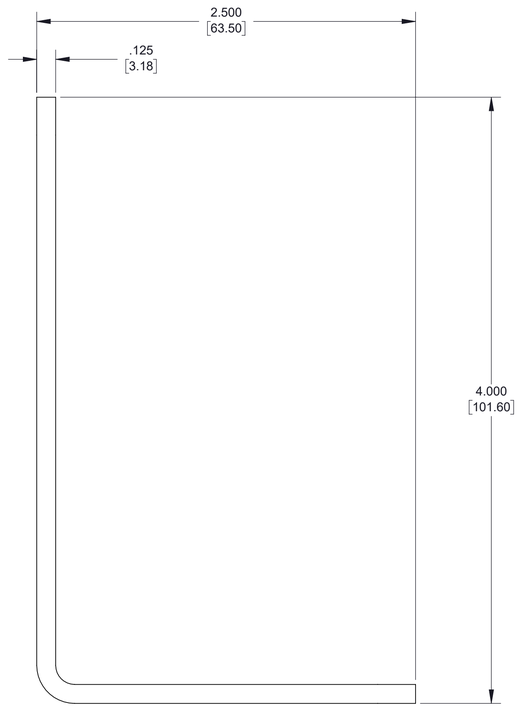

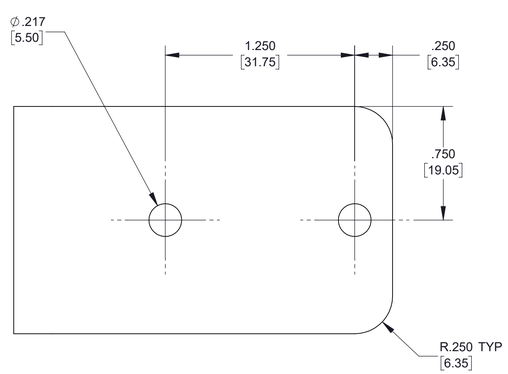

UPPER DRAG CHAIN CABLE GUIDE
(DXF FILE INCLUDED)
ITEM 45

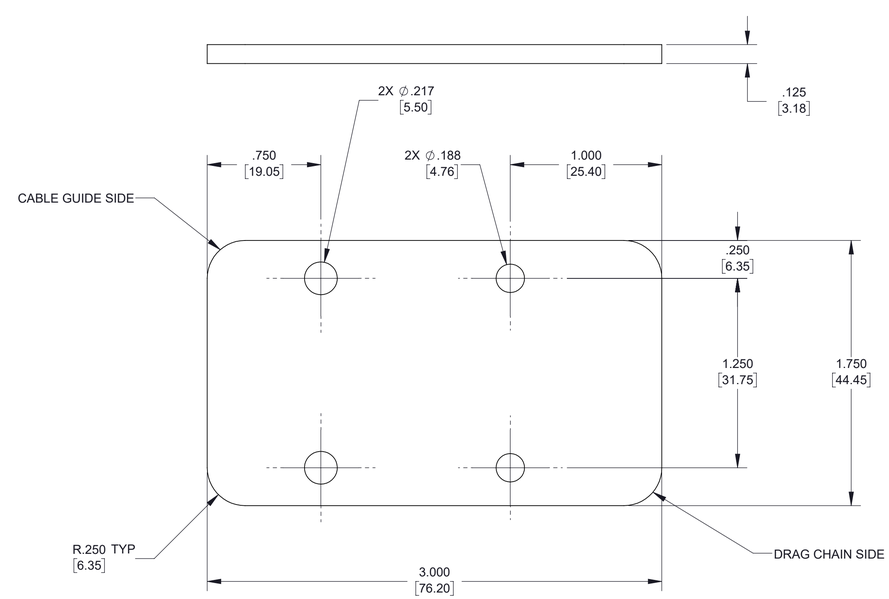

UPPER DRAG CHAIN CABLE GUIDE OFFSET BRACKET
(DXF FILE INCLUDED)
ITEM 46

DESIGNS BY Phil .com

PG: 9
OF: 10

REV 06 - ROTARY DEMON CNC™ © | DESIGNED BY PHIL JOHNSON | TOTAL WEIGHT = 0.11

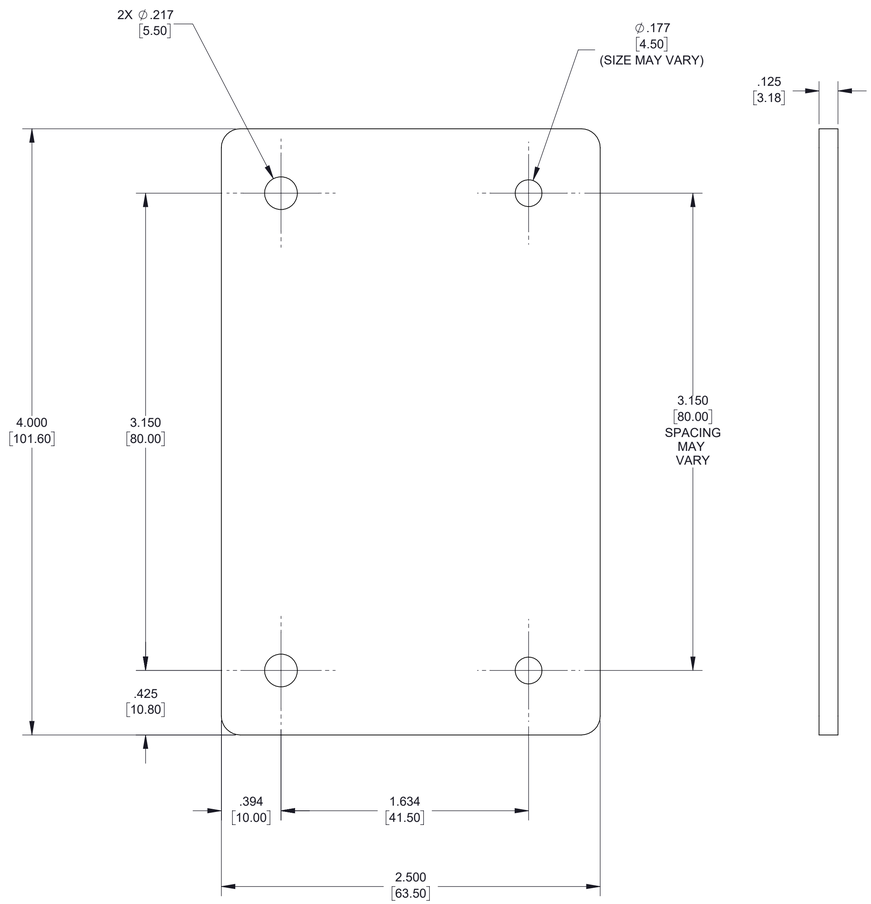

X AND Z BARRIER STRIP OFFSET PLATE
(DXF FILE INCLUDED)
ITEM 58

DESIGNS BY Phil .com

PG: 10
OF: 10

REV 06 - ROTARY DEMON CNC ©

DESIGNED BY PHIL JOHNSON

TOTAL WEIGHT = 0.12