110 Series

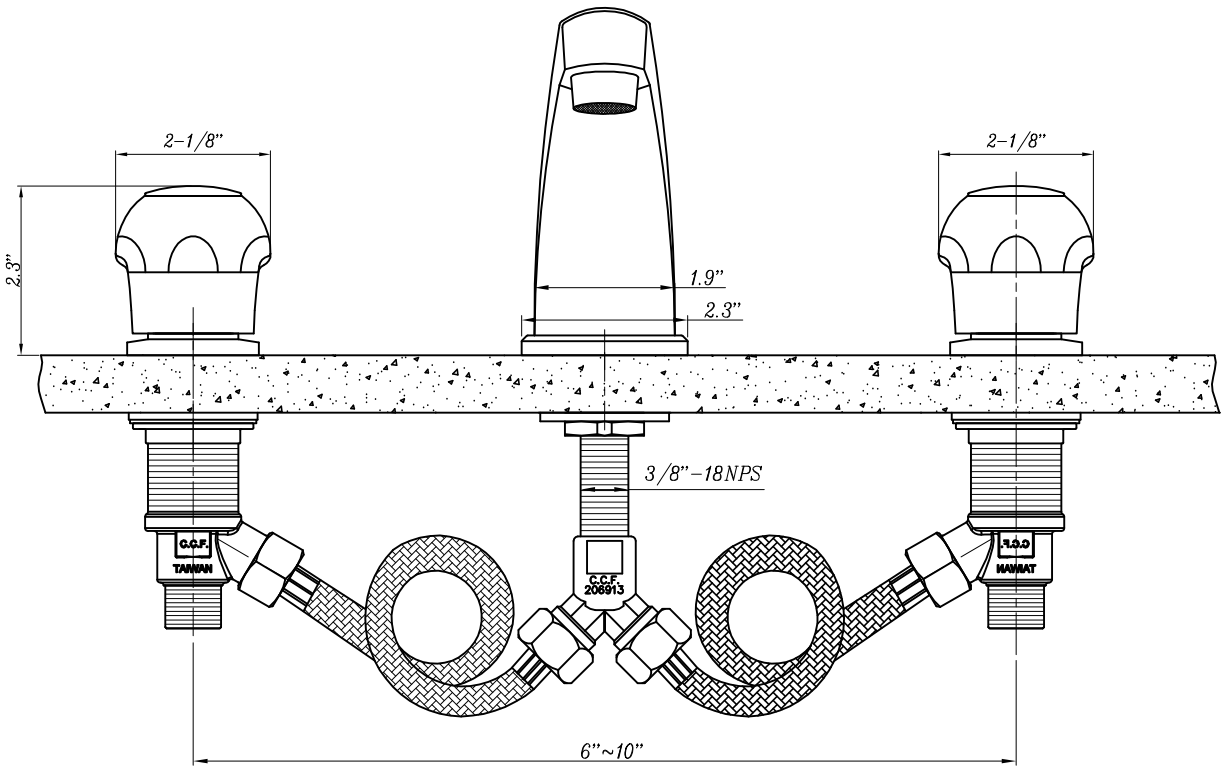
2-1/8"
2-1/8"
2.3"
1.9"
2.3"
3/8"-18NPS
C.C.F.
TAIWAN
C.C.F.
206913
C.C.F.
HAWAT
6"~10"

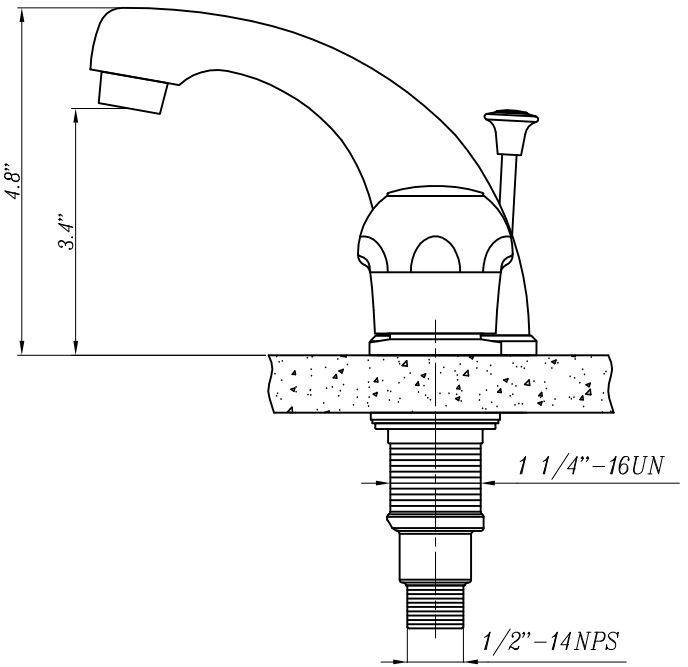
4.8"
3.4"
1 1/4"-16UN
1/2"-14NPS