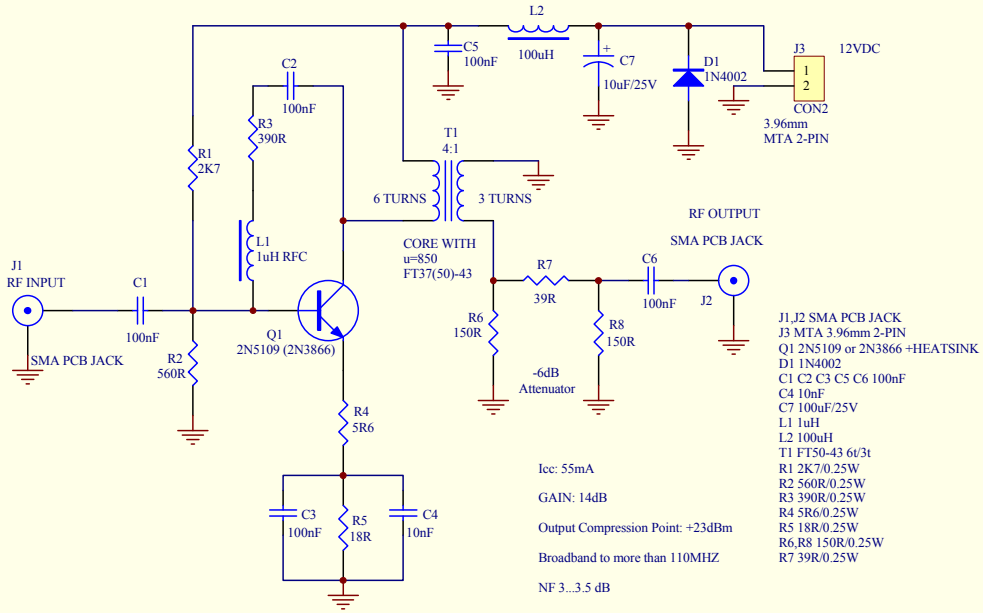

J1,J2 SMA PCB JACK
J3 MTA 3.96mm 2-PIN
Q1 2N5109 or 2N3866 +HEATSINK
D1 1N4002
C1 C2 C3 C5 C6 100nF
C4 10nF
C7 100uF/25V
L1 1uH
L2 100uH
T1 FT50-43 6t/3t
R1 2K7/0.25W
R2 560R/0.25W
R3 390R/0.25W
R4 5R6/0.25W
R5 18R/0.25W
R6,R8 150R/0.25W
R7 39R/0.25W

Icc: 55mA

GAIN: 14dB

Output Compression Point: +23dBm

Broadband to more than 110MHZ

NF 3...3.5 dB

2N5109 BROADBAND AMPLIFIER

WWW.SV1AFN.COM