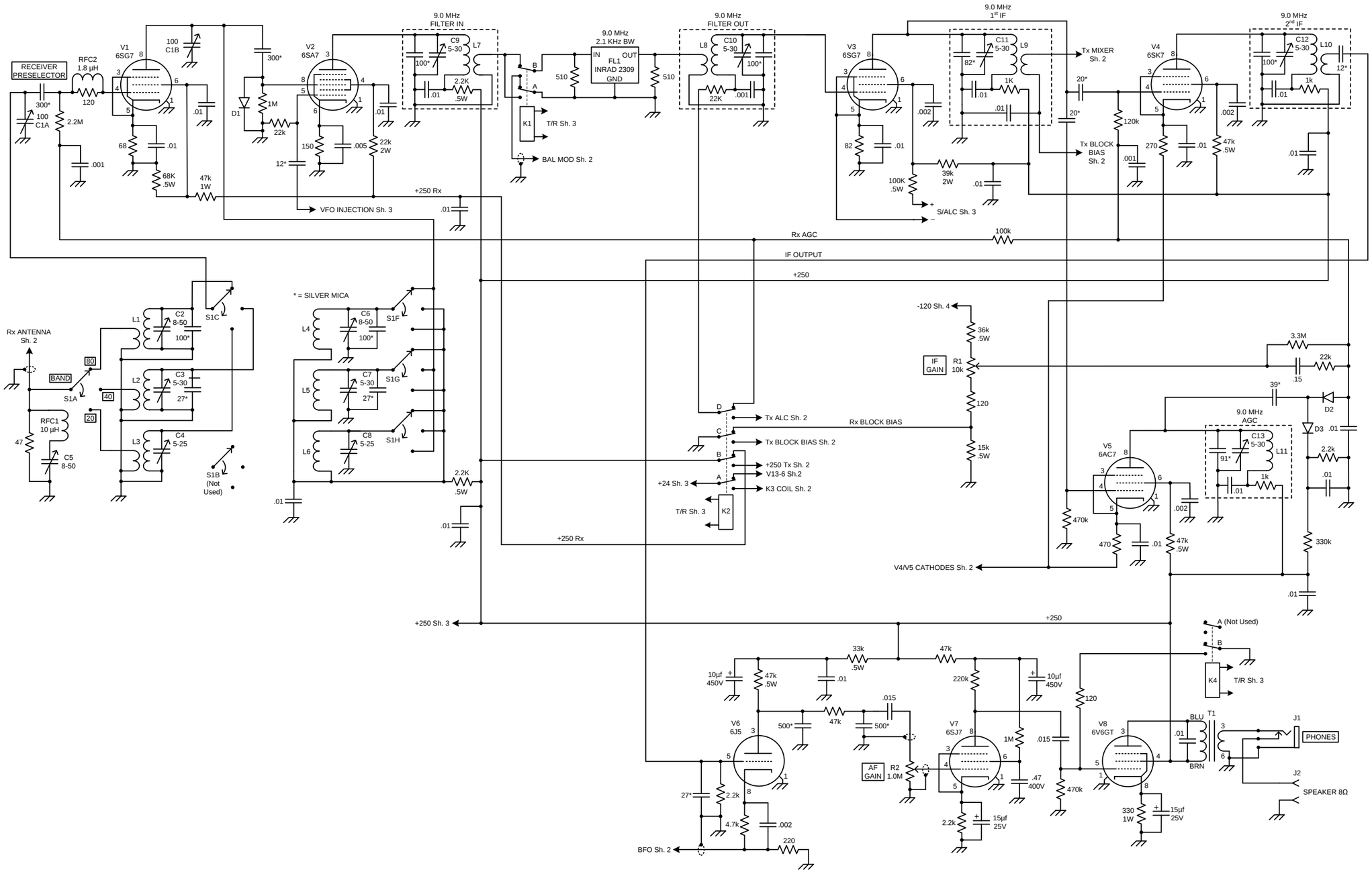

OCTAL TRI-BANDER
100 WATT SSB TRANSCEIVER

SHEET 1
RECEIVER CIRCUITS

HOMEBREWED BY KG7TR

REVISION 24 MAR 2023

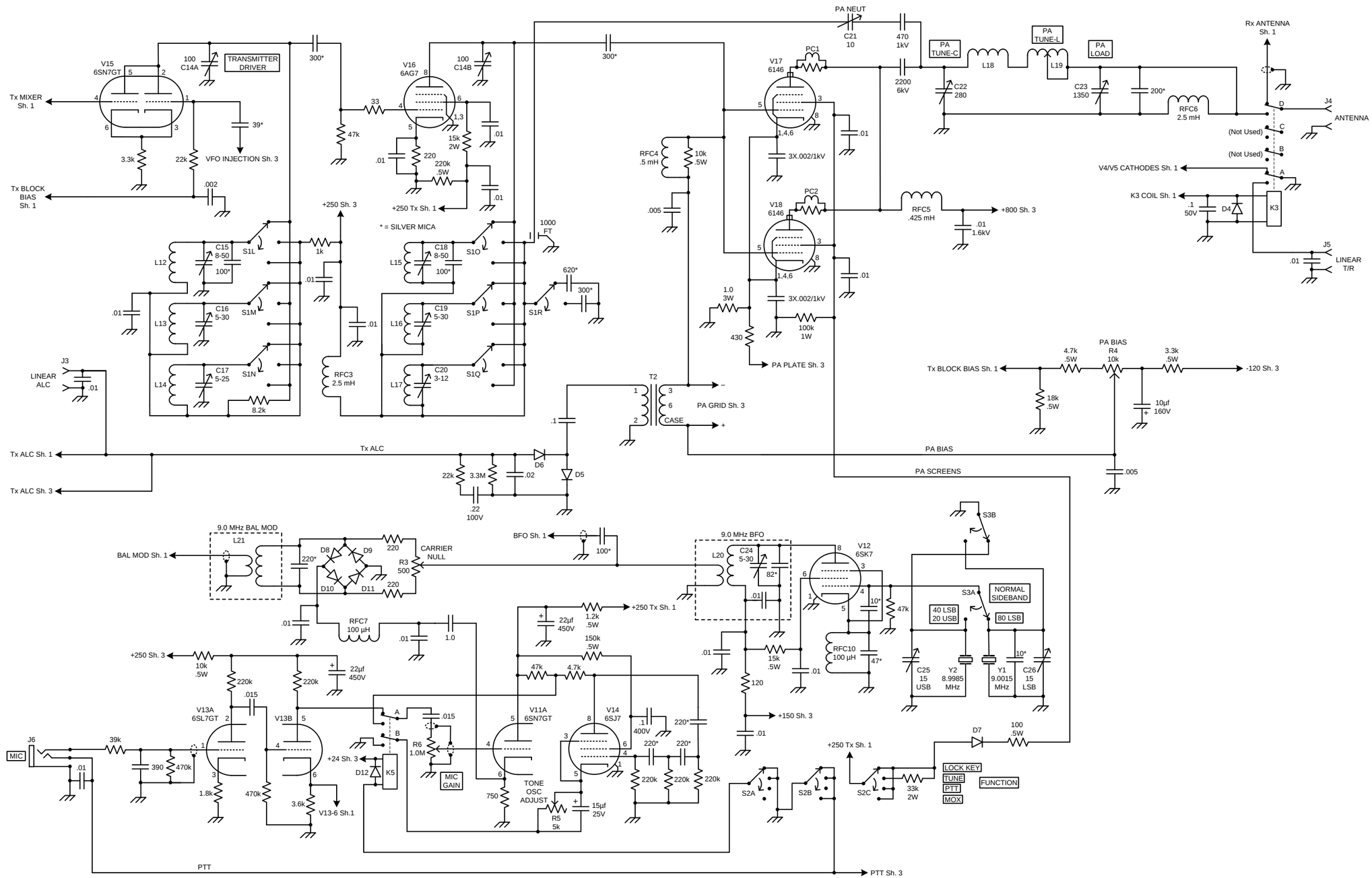

OCTAL TRI-BANDER
100 WATT SSB TRANSCEIVER

SHEET 2
TRANSMITTER CIRCUITS

HOMEBREWED BY KG7TR

REVISION 17 MAY 2024

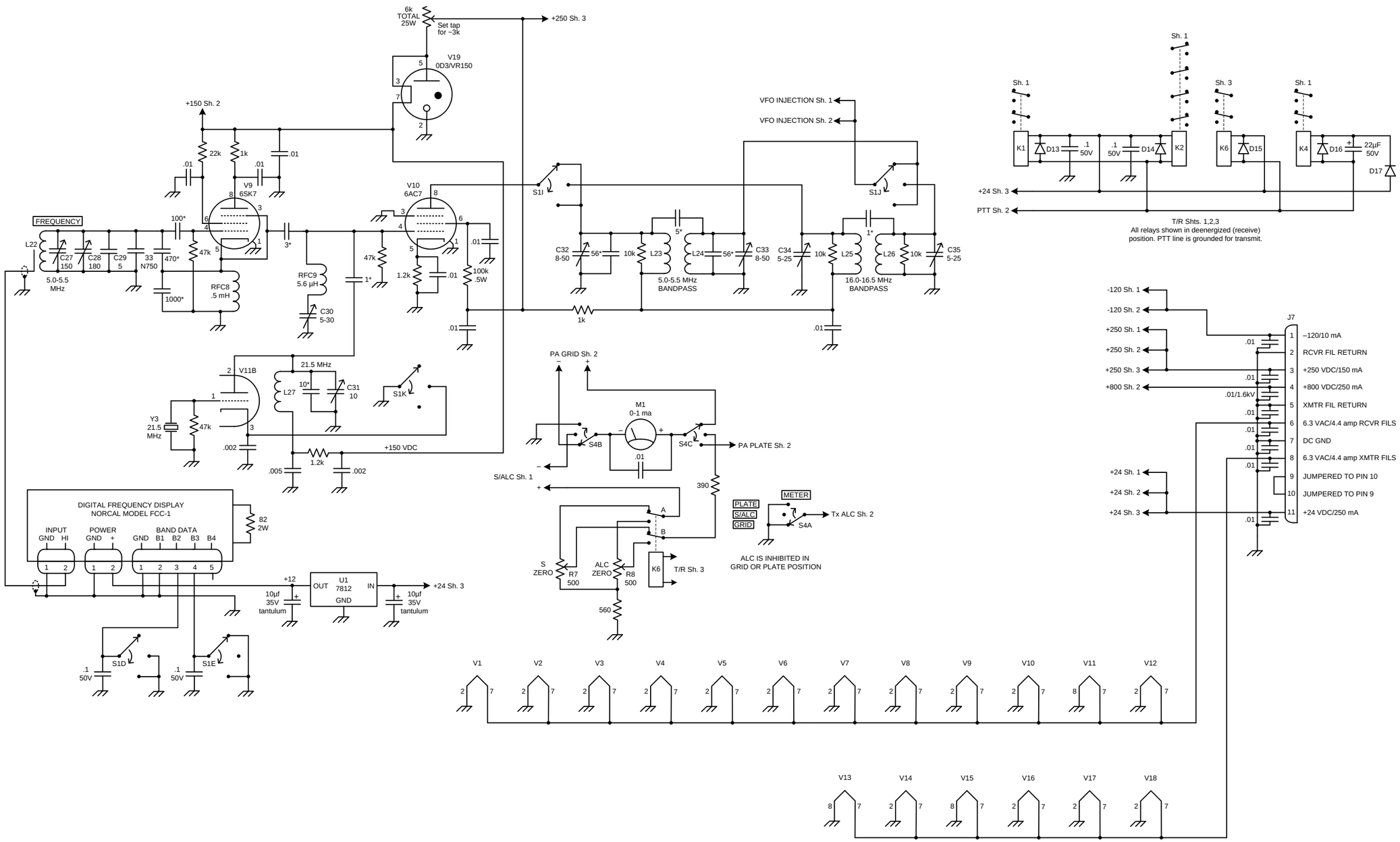

OCTAL TRI-BANDER
100 WATT SSB TRANSCEIVER

HOMEBREWED BY KG7TR

SHEET 3
VFO, PREMIXER, METERING, CONTROL, POWER CIRCUITS

REVISION 23 JAN 2021

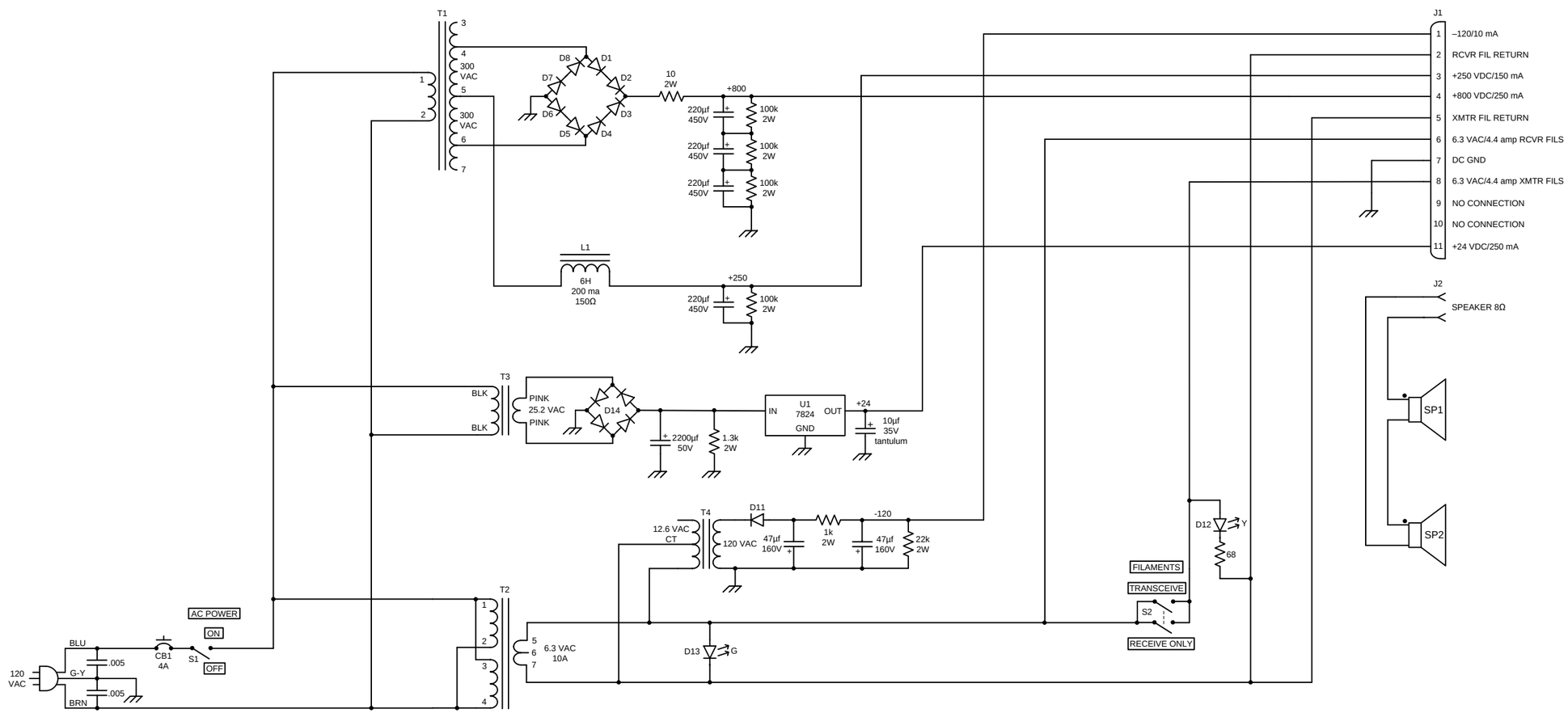

OCTAL TRI-BANDER
100 WATT SSB TRANSCEIVER

HOMEBREWED BY KG7TR

SHEET 4
POWER SUPPLY/
SPEAKER CIRCUITS

REVISION 23 JAN 2021