PRODUCT DATA SHEET

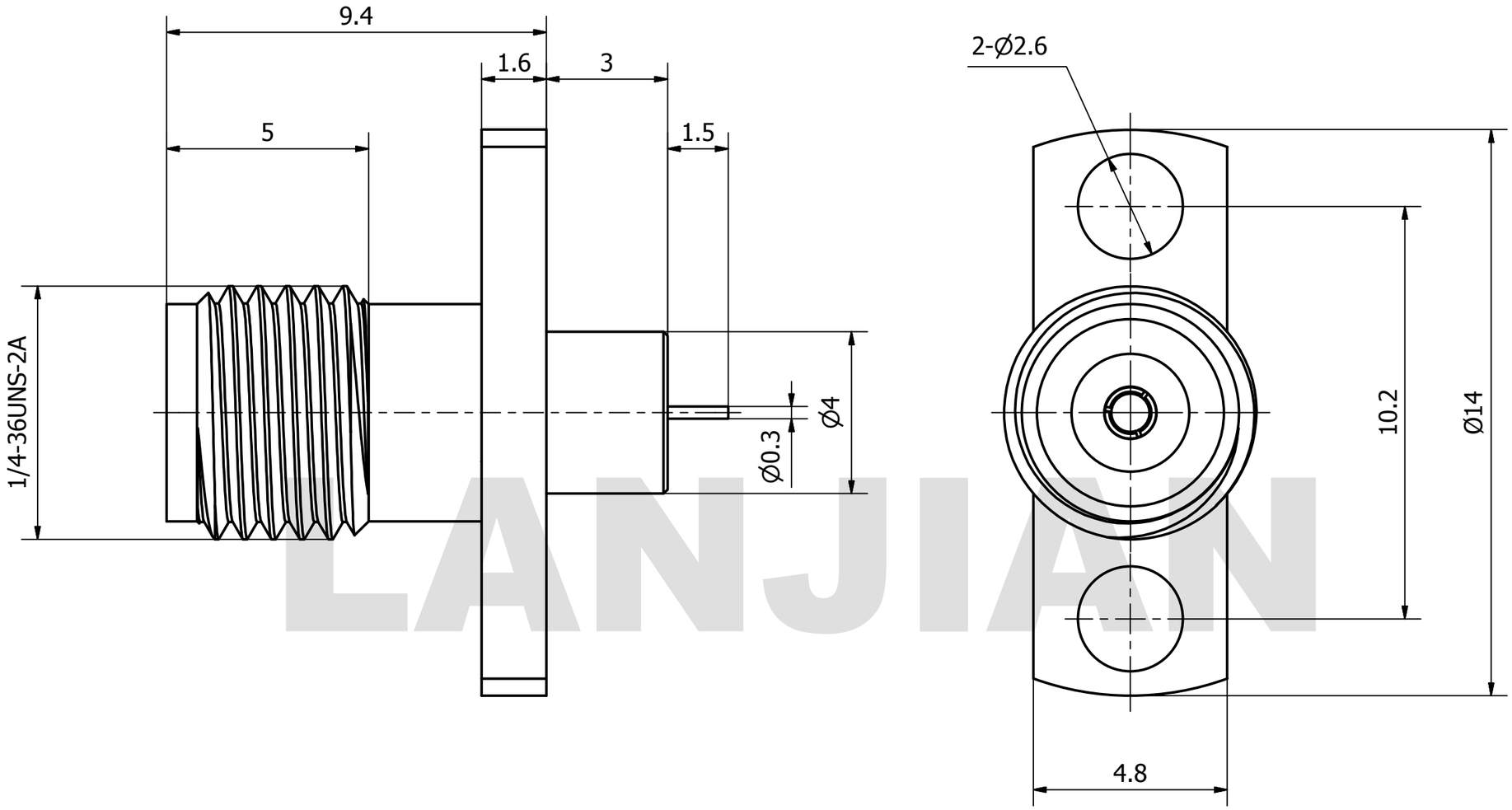

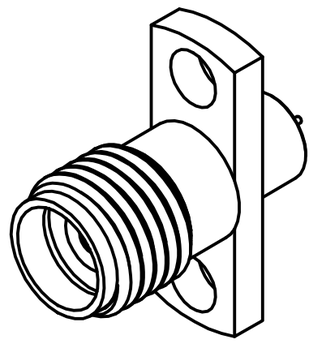

LANJIAN

MATERIAL:

BODY: STAINLESS STEEL PER AMS-5640, ALLOY UNS S30300

CONTACT: BERYLLIUM COPPER PER ASTM B196. ALLOY NO. UNS C17300

INSULATOR: PEI & PTFE

PERFORMANCE:

IMPEDANCE: 50 OHMS

FREQUENCY: DC TO 40 GHz

VSWR: ≤1.25

THIS DOCUMENT CONTAINS CONFIDENTIAL AND PROPRIETARY INFORMATION THAT CANNOT BE REPRODUCED OR DIVULGED, IN WHOLE OR IN PART, WITHOUT WRITTEN AUTHORIZATION FROM "LANJIAN ELECTRONICS"

MATERIAL :

UNLESS OTHERWISE SPECIFIED: DIMENSIONS IN MM

TOLERANCES :

X.X ±0.20 ANGULAR : ±1°

X.XX ±0.10 FILLETS R/C : ±0.10

X.XXX ±0.01 SURFACE FINISH : Ra 1.6

DEBURR AND BREAK SHARP EDGES

	NAME	DATE	SIGNATURE
DRAWN			
CHK'D			
APPV'D			
MFG			

PROJECTION | SIZE A3 | SCALE 8 : 1

LANJIAN ELECTRONICS
38 Hengtong Road, Xinqu Dingmao
Zhenjiang, 212009, Jiangsu, P. R. China

TITLE

2.92-KFD2-140030P
straight micro-strip connector

DWG No. GCPZ3.660.C.032

REV.

DO NOT SCALE THE DRAWING