Prices effective July 5, 2023

Published January 2024

Caper® Chairs

HermanMiller list prices shown are in USD. For HermanMiller Canadian prices, multiply the USD list price by a factor of 1.20---effective July 2023.

Introduction	**page 2**
Caper® Chairs	**3**
Multipurpose Chair	5
Multipurpose Stool	7
Stacking Stools	9
Stacking Chairs	11
Stacking Chair with Tablet Arm	15
Storage Baskets	17
Cart	19
Indices	**21**
By Name	21
By Number	23
Appendices	
20-Day or Less/Assigned Lead-Time Order Information	
Casters and Glides	
Textiles Application Chart-Seating	
Textile Colors	

For the latest materials information, refer to the Materials pages on HermanMiller.com.

Introduction

A Note on the Organization of This Book

There are a few signals that will help you understand the organization of this book. Once you know them, you should be able to find your way around easily.

Like a newspaper, this book is formatted with columns of text and illustrations that run vertically.

Information wraps from one column to the next and continues for as many pages as it needs to.

Black bars are clues.

A black bar at the top of a page signals the start of information about a product.

This information is divided into two sections, each signaled by a black bar. Product Information includes a description, additional notes, and dimensional drawings. Specification Information, which always begins at the top of a column, includes a series of steps. Each step represents a decision you need to make in order to complete your product number. Steps must be followed sequentially. The number of pages needed to complete information on a product varies; some will be complete in one page; others may fill three or four pages. Just continue going through the steps until you run into the next product, signaled by the black bar at the top of the page.

Black tabs running along the outside edge of the page help you locate what section you are in or what section you want to go to. You can thumb forwards or backwards to find a section; tabs and text appear on both sides of the page.

The additional pages in the back of the book include the appendices and indices. They are signaled by a long black bar running along the outside edge of the page.

The index is presented two ways.

The first index is in alphabetical order by product name. It can be helpful if you are new to the products and numbering scheme or if you are looking for a type of product, such as work chair or round table.

The second index is by product number. It lists, in alphanumeric order, the base product number, typically a five-digit number.

General Information

This book is effective July 5, 2023, subject to change without notice. Products may be purchased from authorized Herman Miller dealers who will quote prices upon request. For more information about our products and services or to see a list of dealers, visit www.HermanMiller.com.

All prices are list prices. Additional services, such as planning services, design, storage, and installation, are not included and must be added to these prices when the additional services are requested.

Illustrations, specifications, and prices are based on the latest information at the time of publication. The right is reserved to make changes at any time without notice in prices, fabrics, finishes, materials, specifications, and models, and also to discontinue models and finishes.

Dimensions shown in the drawings are engineering drawing dimensions rounded up to the nearest 1/8". Product is shipped set up or knocked down. Products that include "Shipped knocked down" in the description require some assembly. If this statement does not appear in the description, the product is shipped assembled.

Service problems are normally handled by a Herman Miller authorized dealer. Where this cannot be accomplished on a local level, service problems should be referred to the Customer Care Representative for your region, Herman Miller, Inc., Zeeland, Michigan 49464.

20-Day or Less/Assigned Lead-Time Shipments

All products and options in this price book not designated by an Assigned Program icon A will ship in **20 business days or less** after being acknowledged by Herman Miller.

Products and options designated by an A are on the assigned lead- time program and may ship in 20 days, less than 20 days, or more than 20 days from order acknowledgement.

Multipurpose Chair

Multipurpose Stools

Stacking Chairs

Cart

Multipurpose Chair

WC111
WC121

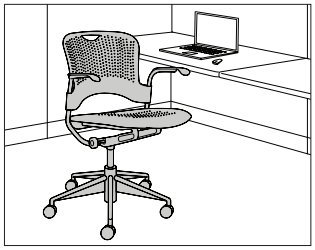

Product Information

Description

This multipurpose chair has a molded, flexible back that is perforated and contoured. It has a biomechanical tilt mechanism that synchronizes the movement of the chair's seat and back, pneumatic seat-height adjustment, and 5-star base with casters. The chair has 2 seat options: the molded seat is perforated and contoured; the Flexnet™ seat is suspension material. It is available with or without arms.

The multipurpose chair is breathable and distributes the user's weight evenly. Each chair is lightweight and mobile and has a cutout in the back for easy movement.

Notes

Caper® chairs are not recommended for outdoor use.

For information on casters, see Casters and Glides in Appendices.

Dimensions

Molded Seat

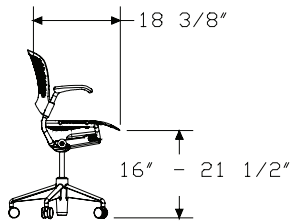

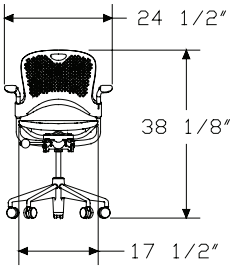

FLEXNET Seat

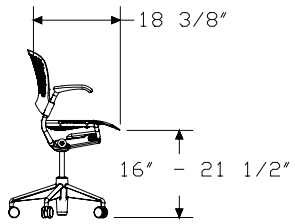

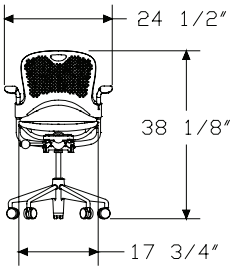

Specification Information

Step 1.

WC1

Step 2. Seat Style

11	molded seat	+$915
21	flexnet™ seat	+$1125

Step 3. Arms

N	no arms	+$0
P	fixed arms	+$132

Step 4. Frame Finish

BK	black	+$0
MS	metallic silver	+$20

Step 5. Seat/Back Finish

3M	berry blue	+$0
63	fog	+$0
98	studio white	+$0
BK	black	+$0
G1	graphite	+$0
RO	red	+$0
TRQ	turquoise	+$0
ZK	cappuccino	+$0

Step 6. Casters

BB	2 1/2″ hard caster, black yoke, carpet only	+$0
C7	2 1/2″ caster, black yoke, hard floors or carpet	+$40
C9	2 1/2″ braking caster, black yoke, hard floors or carpet	+$50

Step 7. Arm Finish/Arm Cap Finish

For no arms (N)

63	fog	+$0
BK	black	+$0
SY	silver grey	+$0

For fixed arms (P)

63	fog	+$0
BK	black	+$0
SY	silver grey	+$0

Step 8. Flexnet™ Material	
For flexnet™ seat (21)	
See application chart and textiles list for fabric usage and numbers.	
First 2 digits of number indicate fabric line; remaining digit(s) indicate fabric color.	
Price Category 1	+$0

Caper® Multipurpose Stool

WC751
WC752

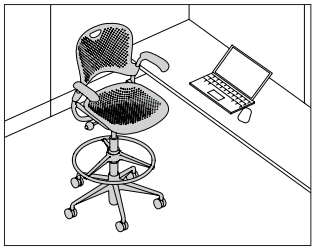

Product Information

Description

This multipurpose stool has a molded, flexible back that is perforated and contoured. It has a biomechanical tilt mechanism that synchronizes the movement of the stool's seat and back, pneumatic height adjustment and 5-star base. The stool has 2 seat options: the molded seat is perforated and contoured; the Flexnet™ seat is suspension material. It is available with or without arms.

The stool is breathable and distributes the user's weight evenly.

Notes

Footrest available in trivalent chrome; column and ring support are black.

Caper® multipurpose stools are not recommended for outdoor use.

For information on casters, see Casters and Glides in Appendices.

Dimensions

Molded Seat

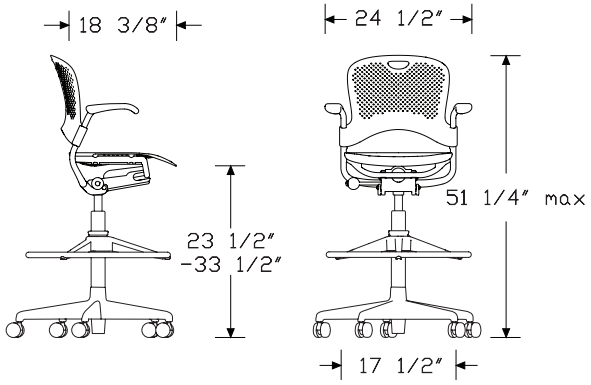

Flexnet Seat

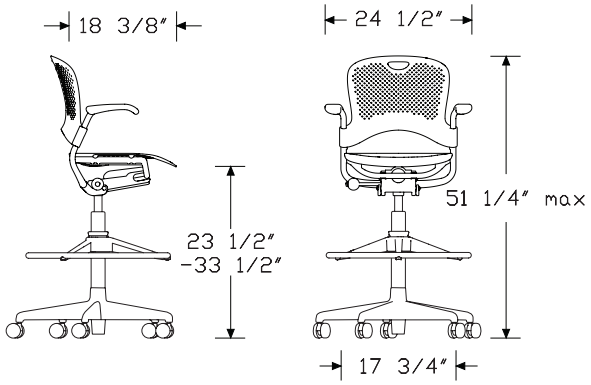

Specification Information		
Step 1.		
WC7		
Step 2. Height Adjustment		
5	5-star base, stool height range	+$1260
Step 3. Seat Style		
11	molded seat	+$0
21	flexnet™ seat	+$210
Step 4. Arms		
N	no arms	+$0
P	fixed arms	+$132
Step 5. Frame Finish		
BK	black	+$0
MS	metallic silver	+$20
Step 6. Seat/Back Finish		
3M	berry blue	+$0
63	fog	+$0
98	studio white	+$0
BK	black	+$0
G1	graphite	+$0
RO	red	+$0
TRQ	turquoise	+$0
ZK	cappuccino	+$0
Step 7. Casters/Glides		
BB	$2^1/_2$" hard caster, black yoke, carpet only	+$0
C7	$2^1/_2$" caster, black yoke, hard floors or carpet	+$40
C9	$2^1/_2$" braking caster, black yoke, hard floors or carpet	+$40
GF	$2^1/_2$" glide, hard floors or carpet	+$0
Step 8. Arm Finish/Arm Cap Finish		
For no arms (N)		
63	fog	+$0
BK	black	+$0
SY	silver grey	+$0
For fixed arms (P)		
63	fog	+$0
BK	black	+$0
SY	silver grey	+$0

Step 9. Flexnet™ Material	
For flexnet™ seat (21)	
See application chart and textiles list for fabric usage and numbers.	
First 2 digits of number indicate fabric line; remaining digit(s) indicate fabric color.	
Price Category 1	+$0

Caper® Stacking Stool

WC742
WC743

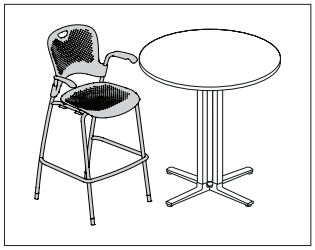

Product Information

Description

This stacking stool has a molded, flexible back that is perforated and contoured. The stool has a tubular steel frame and foot ring and comes in 24" (counter) and 30" (bar) heights. Available with or without arms.

The stool has 2 seat options: the molded seat is perforated and contoured; the Flexnet™ seat is suspension material. Each stool is breathable and distributes the users weight evenly.

The stool is lightweight and mobile. The 24" stool weighs 13.8 pounds and the 30" stool weighs 14.9 pounds. All styles of this stool can be stacked up to 5 high on the floor. Each seat back has a cutout for easy movement.

Notes

Caper stacking stools are not recommended for outdoor use.

Glide color is predetermined based on arm finish/arm cap finish. For black (BK) and silver grey (SY), glides are black. For fog (63), glides are fog (63).

For information on casters and glides, see Casters and Glides in appendices.

Dimensions

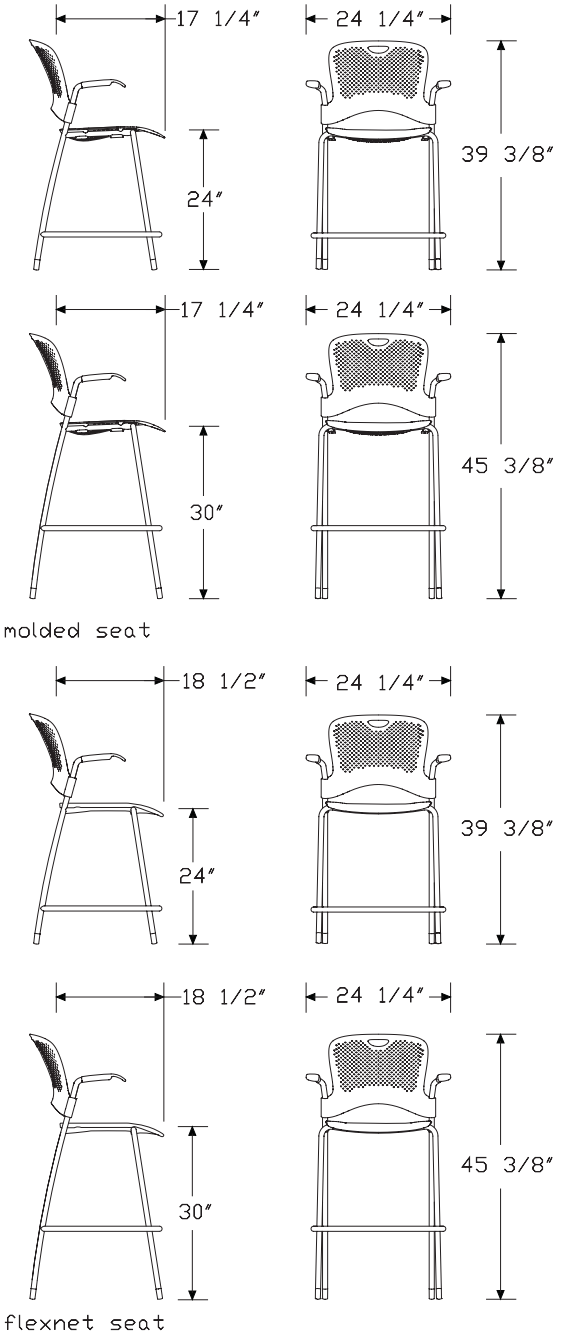

Specification Information		
Step 1.		
WC7		
Step 2. Height Adjustment		
424	4-leg base, counter height range	+$642
430	4-leg base, bar height range	+$642
Step 3. Seat Style		
10	molded seat	+$0
20	flexnet™ seat	+$210
Step 4. Arms		
N	no arms	+$0
P	fixed arms	+$132
Step 5. Frame Finish		
BK	black	+$0
MS	metallic silver	+$20
Step 6. Seat/Back Finish		
3M	berry blue	+$0
63	fog	+$0
98	studio white	+$0
BK	black	+$0
G1	graphite	+$0
RO	red	+$0
TRQ	turquoise	+$0
ZK	cappuccino	+$0
Step 7. Casters/Glides		
Y7	acetal glide, carpet only	+$0
YX	Floor Saver Glide® insert, hard floors only	+$25
Step 8. Arm Finish/Arm Cap Finish		
63	fog	+$0
BK	black	+$0
SY	silver grey	+$0
Step 9. Flexnet™ Material *For flexnet™ seat (20)* *See application chart and textiles list for fabric usage and numbers.* *First 2 digits of number indicate fabric line; remaining digit(s) indicate fabric color.*		
Price Category 1		+$0

Stacking Chair

WC410
WC420

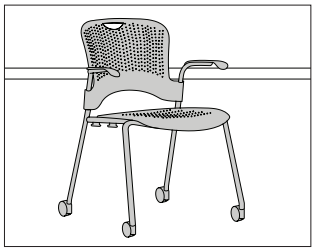

Product Information

Description

This stacking chair has a tubular steel frame, a molded back that is perforated and contoured, and a 4-leg base with casters or glides. It has 2 seat options: the molded seat is perforated and contoured; the Flexnet™ seat is suspension material. Each chair is breathable and distributes the user's weight evenly. The chair is available with or without arms.

The chair is lightweight and mobile. The molded chair without arms weighs 9½ pounds and the Flexnet chair with arms weighs 11½ pounds. All styles of this chair can be stacked up to 6-chairs high on the floor and up to 15-chairs high on the Caper® cart. Each chair has a cutout in the back for easy movement.

Notes

Ganging stacking chairs (WC415 or WC425) can be stacked with armless stacking chairs (WC410N or WC420N) on the floor or on a Caper cart.

Caper chairs with installed storage basket will not stack. Order storage basket (WC6) separately.

Order optional Caper cart (WC904) separately.

Caper chairs are not recommended for outdoor use.

Glide color is predetermined based on arm finish/arm cap finish. For black (BK) and silver grey (SY), glides are black. For fog (63), glides are fog (63).

For information on casters and glides, see Casters and Glides in Appendices.

Dimensions

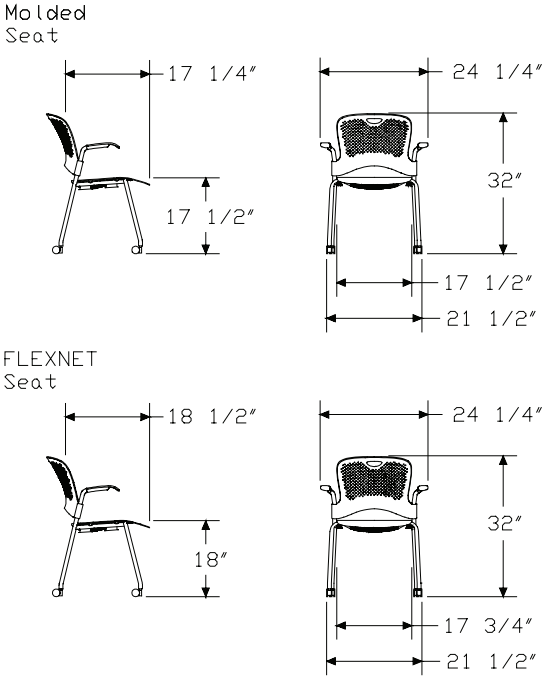

Specification Information		
Step 1.		
WC4		
Step 2. Seat Style		
10	molded seat	+$333
20	flexnet™ seat	+$543
Step 3. Arms		
N	no arms	+$0
P	fixed arms	+$132
Step 4. Frame Finish		
BK	black	+$0
MS	metallic silver	+$20
Step 5. Seat/Back Finish		
3M	berry blue	+$0
63	fog	+$0
98	studio white	+$0
BK	black	+$0
G1	graphite	+$0
RO	red	+$0
TRQ	turquoise	+$0
ZK	cappuccino	+$0
Step 6. Casters/Glides		
Y7	acetal glide, carpet only	+$0
YX	Floor Saver Glide® insert, hard floors only	+$25
U5	soft wheel caster, carpet or hard floors	+$30
DS	2" soft double wheel braking caster, hard floors	+$30
Step 7. Arm Finish/Arm Cap Finish		
63	fog	+$0
BK	black	+$0
SY	silver grey	+$0
Step 8. Flexnet™ Material		
For flexnet™ seat (20)		
See application chart and textiles list for fabric usage and numbers.		
First 2 digits of number indicate fabric line; remaining digit(s) indicate fabric color.		
Price Category 1		+$0

Ganging Stacking Chair

WC415
WC425

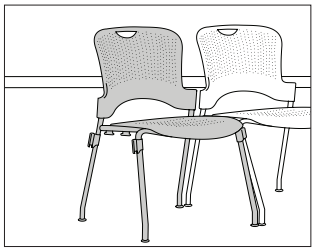

Product Information

Description

This ganging stacking chair has a tubular steel frame, a molded back that is perforated and contoured, and a 4-leg base with glides. It has 2 seat options: the molded seat is perforated and contoured; the Flexnet™ seat is suspension material. Each chair is breathable and distributes the user's weight evenly. The chair's ganging connectors are on the front and rear legs to ensure proper alignment.

The chair is lightweight and mobile and weighs 9½ pounds. It can be stacked up to 6-chairs high on the floor and up to 15-chairs high on the Caper® cart. Each chair has a cutout in the back for easy movement.

Notes

Ganging connector finish matches frame finish.

Ganging stacking chairs (WC415 or WC425) can be stacked with armless stacking chairs (WC410N or WC420N) on the floor or on a Caper cart.

Caper chairs with installed storage basket will not stack. Order storage basket (WC6) separately.

Order optional Caper cart (WC904) separately.

Caper chairs are not recommended for outdoor use.

Glide color is predetermined based on arm finish/arm cap finish. For black (BK) and silver grey (SY), glides are black. For fog (63), glides are fog (63).

For information on glides, see Casters and Glides in Appendices.

Dimensions

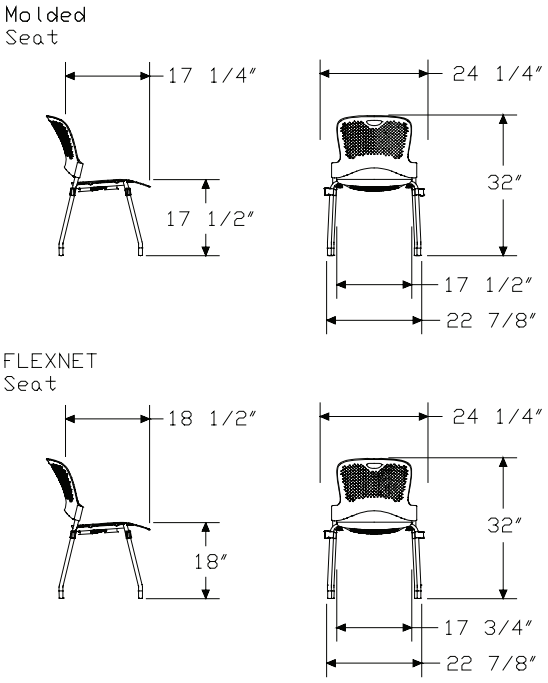

Specification Information		
Step 1.		
WC4		
Step 2. Seat Style		
15N	molded seat	+$386
25N	flexnet™ seat	+$596
Step 3. Frame Finish		
BK	black	+$0
MS	metallic silver	+$20
Step 4. Seat/Back Finish		
3M	berry blue	+$0
63	fog	+$0
98	studio white	+$0
BK	black	+$0
G1	graphite	+$0
RO	red	+$0
TRQ	turquoise	+$0
ZK	cappuccino	+$0
Step 5. Glide Option		
Y7	acetal glide, carpet only	+$0
YX	Floor Saver Glide® insert, hard floors only	+$25
Step 6. Arm Cap Finish		
63	fog	+$0
BK	black	+$0
SY	silver grey	+$0
Step 7. Flexnet™ Material		
For flexnet™ seat (25N)		
See application chart and textiles list for fabric usage and numbers.		
First 2 digits of number indicate fabric line; remaining digit(s) indicate fabric color.		
Price Category 1		+$0

Stacking Chair with Tablet Arm

WC510
WC520

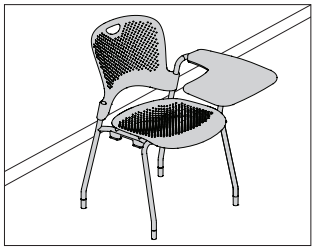

Product Information

Description

This stacking chair with tablet arm has a tubular steel frame, a molded back that is perforated and contoured, and a 4-leg base with glides. It has 2 seat options: the molded seat is perforated and contoured; the Flexnet™ seat is suspension material. Each chair is breathable and distributes the user's weight evenly. The tablet arm can be specified on the left or right side.

The tablet is wood and flat, and available in a variety of laminate options. It is 17 7/8"W×20 7/8"D. The tablet has a built-in dampener that prevents the tablet from falling down when extended.

This stacking chair with tablet can be stacked up to 3-chairs high on the floor or on the Caper® cart. Each chair has a cutout in the back for easy movement.

Tablet ships unassembled to the chair to prevent damage during shipping.

The tablet fully extends to 135° in the up position for ease of getting into and out of the chair.

Notes

Footprint of chair with tablet in down position is 32"H×25"W×31 1/2"D.

Footprint of chair with tablet fully extended in up position is 32"H×35"W×31 1/2"D.

Do not sit on or stack heavy objects on tablet arm. Product could tip and cause injury.

Chair with tablet cannot be ganged together.

Order optional Caper cart (WC904) separately.

Caper chairs are not recommended for outdoor use.

For information on glides, see Casters and Glides in appendices.

Dimensions

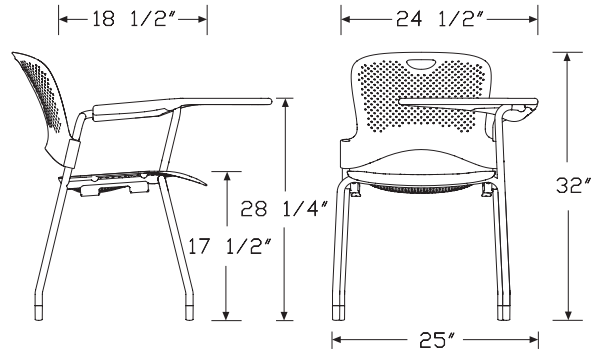

Molded Seat

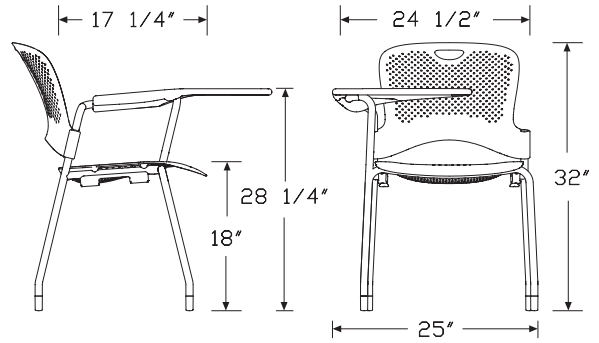

Flexnet Seat

Stacking Chair with Tablet Arm

continued

Specification Information

Step 1.		
WC5 A		

Step 2. Seat Style		
10	molded seat A	+$773
20	flexnet™ seat A	+$983

Step 3. Tablet Arm Orientation		
L	tablet arm left A	+$0
R	tablet arm right A	+$0

Step 4. Frame Finish		
BK	black A	+$0
MS	metallic silver A	+$20

Step 5. Seat/Back Finish		
3M	berry blue	+$0
63	fog A	+$0
98	studio white A	+$0
BK	black A	+$0
G1	graphite A	+$0
RO	red A	+$0
TRQ	turquoise A	+$0
ZK	cappuccino A	+$0

Step 6. Glides		
Y7	acetal glide, carpet only A	+$0
YX	Floor Saver Glide® insert, hard floors only A	+$25

Step 7. Arm Finish/Arm Cap Finish		
63	fog A	+$0
BK	black A	+$0
SY	silver grey A	+$0

Step 8. Tablet Finish		
76	light brown walnut A	+$0
8Q	folkstone grey A	+$0
91	white A	+$0
98	studio white A	+$0
BU	black umber A	+$0
CL	cool grey neutral A	+$0
HF	inner tone light A	+$0
HM	natural maple A	+$0
HP	light anigre A	+$0
HX	aged cherry A	+$0
LBA	clear on ash A	+$0
LBR	phantom ecru A	+$0
LBS	phantom cocoa A	+$0
LBU	medium matte walnut A	+$0
LBV	warm grey teak A	+$0
LBB	oak on ash A	+$0
LBC	walnut on ash A	+$0
LBF	neutral twill A	+$0
LBJ	graphite twill A	+$0
LBQ	white twill A	+$0
LT	light tone A	+$0
LU	soft white A	+$0
WL	sandstone A	+$0
WN	warm grey neutral A	+$0

Step 9. Flexnet™ Material	
For flexnet™ seat (20)	
See application chart and textiles list for fabric usage and numbers.	
First 2 digits of number indicate fabric line; remaining digit(s) indicate fabric color.	
Price Category 1	+$0

Caper® Storage Basket WC601

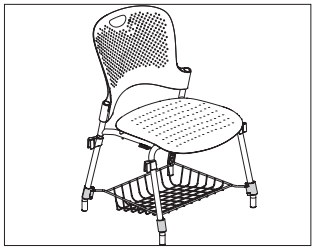

Product Information

Description

This storage basket installs in the field to all models of new or existing Caper® stacking chairs. Basket shape and wire mesh design prevent items from falling off or sliding back. Ships unassembled from the chair. Package contains 1 storage basket.

Notes

Basket maximum weight capacity is 30 pounds.

Specify basket finish to match chair frame finish.

Caper chairs with installed storage basket will not stack.

Order stacking chairs separately:

- Stacking chair (WC410, WC420)
- Ganging stacking chair (WC415N, WC425N)
- Stacking chair with tablet arm (WC510, WC520)

Dimensions

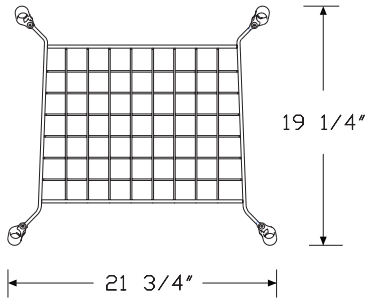

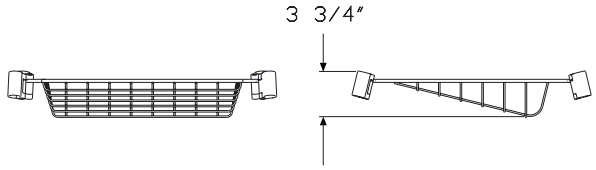

Specification Information

Step 1.

WC6 A

Step 2. Quantity per Box

01	one storage basket per box A	+$141

Step 3. Finish

BK	black A	+$0
MS	metallic silver A	+$0

Caper® Storage Baskets WC604

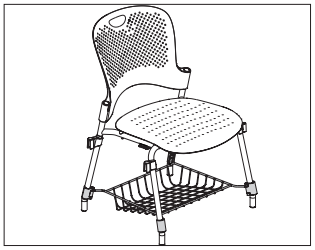

Product Information

Description

This storage basket installs in the field to all models of new or existing Caper® stacking chairs. Basket shape and wire mesh design prevent items from falling off or sliding back. Ships unassembled from the chair. Package contains 4 storage baskets.

Notes

Basket maximum weight capacity is 30 pounds.

Specify basket finish to match chair frame finish.

Caper chairs with installed storage basket will not stack.

Order stacking chairs separately:

- Stacking chair (WC410, WC420)
- Ganging stacking chair (WC415N, WC425N)
- Stacking chair with tablet arm (WC510, WC520)

Dimensions

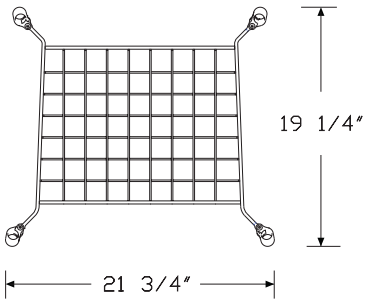

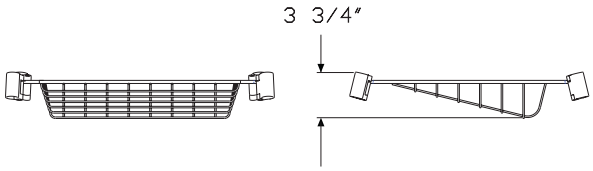

Specification Information

Step 1.

WC6 A

Step 2. Quantity per Box

04	four storage baskets per box A	+$530

Step 3. Finish

BK	black A	+$0
MS	metallic silver A	+$0

Caper® Cart WC904

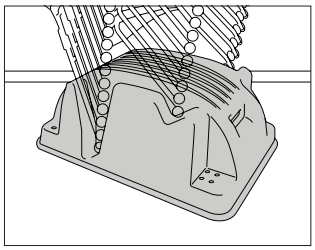

Product Information

Description

This cart stores and transports up to 15 Caper® stacking chairs or ganging stacking chairs, or up to 3 Caper stacking chairs with tablet arm. It has molded-in handles and 4″-diameter casters: 2 swivel and 2 rigid. The cart is single-piece-molded construction that ships fully assembled. Finish is black.

Notes

Ganging stacking chairs (WC415 or WC425) can be stacked with armless stacking chairs (WC410N or WC420N).

Caper stacking chairs with tablet arm (WC510 or WC520) can be stacked only with other Caper stacking chairs with tablet arm.

Dimensions

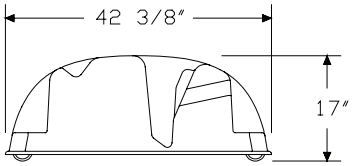

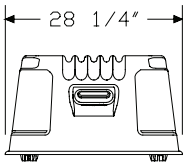

Specification Information

Step 1.

WC904	$693

Index by Product Name

Caper® Chairs	
Caper® Cart	page(s) 19
Caper® Multipurpose Stool	7
Caper® Stacking Stool	9
Caper® Storage Basket	17
Caper® Storage Baskets	18
Ganging Stacking Chair	13
Multipurpose Chair	5
Stacking Chair	11
Stacking Chair with Tablet Arm	15

Index by Product Number

WC111	Multipurpose Chair	page(s) 5
WC121		
WC410	Stacking Chair	11
WC415	Ganging Stacking Chair	13
WC420	Stacking Chair	11
WC425	Ganging Stacking Chair	13
WC510	Stacking Chair with Tablet Arm	15
WC520		
WC601	Caper® Storage Basket	17
WC604	Caper® Storage Baskets	18
WC742	Caper® Stacking Stool	9
WC743		
WC751	Caper® Multipurpose Stool	7
WC752		
WC904	Caper® Cart	19

20-Day or Less/Assigned Lead-Time Order Information

20-Day or Less and Assigned Lead-Time Programs

20-day or less and assigned lead-time products are designed for established Herman Miller dealers with pre-approved credit.

Products are distributed from multiple manufacturing facilities across the United States. All products and options not designated by an Assigned Lead-Time icon A will ship in 20 business days or less after being acknowledged by Herman Miller. Products and options designated by an A are on the assigned lead-time program and will ship in 20 days, less than 20 days, or more than 20 days from order acknowledgement.

Ordering Procedure

Please place orders through Order Manager. If this is not available to you, place orders through mail or fax. Verbal purchase orders will not be accepted.

Order Entry fax number for Meridian®
Filing and Storage: (616) 846 9236.
Order Entry fax number for all other products:
(616) 654 3085.

For more information, contact your Customer Care representative at: (866) 854 3048 ext 3400.

Shipments and Delivery

Per Herman Miller Terms and Conditions.

Changes and Cancellation

Per Herman Miller Terms and Conditions.

Casters and Glides

WARNING

Depending on the floor surface, chair may unexpectedly roll away from user when entering or exiting the chair, possibly leading to unexpected injury. Please refer to descriptions of floor types when selecting casters.

32 Caster

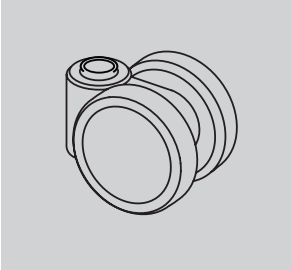

$1^{7}/_{8}$-inch-diameter hard double-wheel caster; black nylon wheels and yoke; for use on carpet only

Applicable on:
Sayl® Chairs

BB Caster

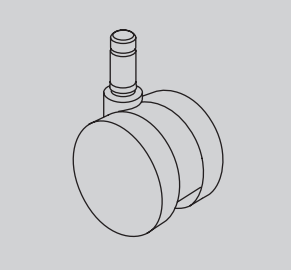

$2^{1}/_{2}$-inch-diameter hard double-wheel caster; black nylon wheels and yoke; for use on carpet only

Applicable on:
Asari Chair by Herman Miller™
New Aeron® Chairs
Caper® Chairs
Embody® Chairs
Fuld Nesting Chairs
Lino™ Chairs
Sayl Chairs
Mirra® 2 Chairs, Verus™ Chairs

BSC Caster

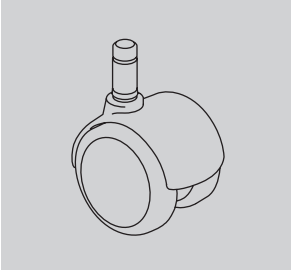

2-inch-diameter double-wheel caster; black nylon wheels and hood; soft polyurethane tread; for use on hard floors or carpet

Applicable on:
Eames® Aluminum Group
Eames Executive Chairs
Eames Soft Pad Group
Eames Task Chairs

C9 Caster

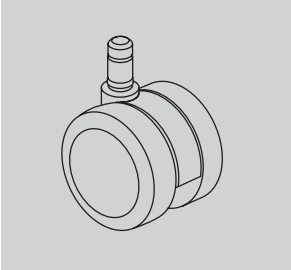

$2^{1}/_{2}$-inch-diameter double-wheel caster; black nylon wheels and yoke; soft polyurethane tread; internal brake; for use on hard floors or carpet

Applicable on:
Caper Chairs
Embody Chairs
Lino Chairs
Mirra 2 Chairs
Sayl Chairs
Setu® Chairs
Verus Chairs

49 Caster

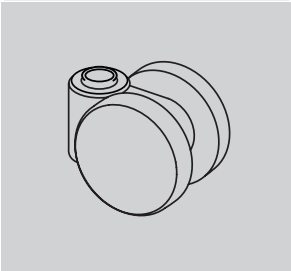

$1^{7}/_{8}$-inch-diameter soft double-wheel caster; black nylon wheels and yoke; for use on hard floors or carpet

Applicable on:
Sayl Chairs

BKS Caster

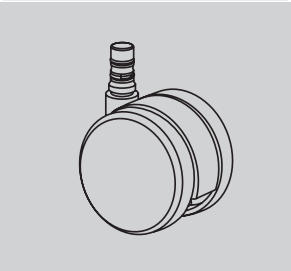

$2^{1}/_{2}$-inch-diameter hard double-wheel caster; black yoke; quiet roll technology; for use on carpet only

Applicable on:
Cosm™ Chairs

C7 Caster

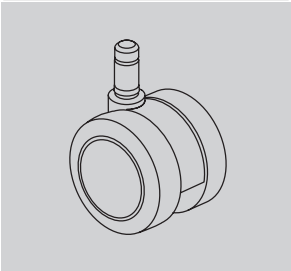

$2^{1}/_{2}$-inch-diameter double-wheel caster; black nylon wheels and yoke; soft polyurethane tread; for use on hard floors or carpet

Applicable on:
Asari Chair by Herman Miller™
New Aeron Chairs
Caper Chairs
Embody Chairs
Fuld Nesting Chairs
Lino Chairs
Mirra 2 Chairs
Sayl Chairs
Verus Chairs

CSQ Caster

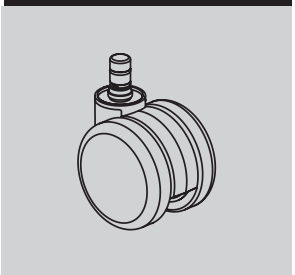

$2^{1}/_{2}$-inch-diameter double-wheel caster; color-matched nylon wheels and yoke; soft polyurethane tread; for use on hard floors or carpet

Applicable on:
Zeph® Chairs

DC1 Caster

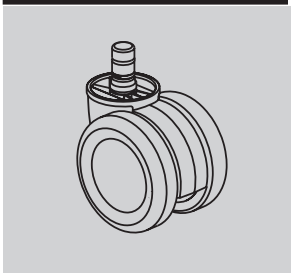

$2^1/_2$-inch-diameter double-wheel braking caster; black nylon wheels and yoke; for use on hard floors or carpet; quiet roll technology

Applicable on:
New Aeron Chairs

H9 Caster

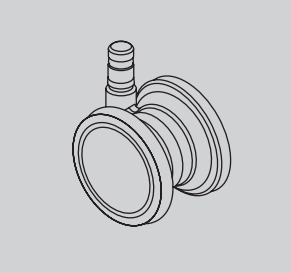

$2^1/_2$-inch-diameter double-wheel caster; clear polycarbonate wheels; nylon yoke; soft polyurethane tread; for use on carpet only

Applicable on:
Embody Chairs

MD Caster

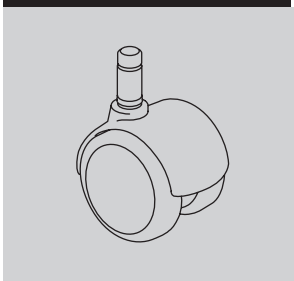

2-inch-diameter double-wheel caster; black nylon wheels with integral chrome hood; soft polyurethane tread; for use on hard floors or carpet

Applicable on:
Eames® Aluminum Group
Eames Executive Chairs
Eames Soft Pad Group
Eames Task Chairs

OC Caster

$2^1/_2$-inch-diameter double-wheel medium roll-resistant caster; black nylon wheels and yoke; soft polyurethane tread; for use on hard floors or carpet; quiet roll technology

Applicable on:
Cosm Chairs
Fuld Nesting Chairs
Setu Chairs

DS Caster

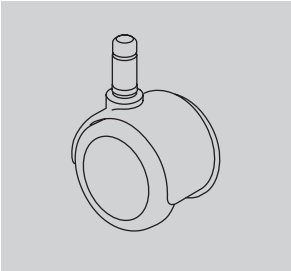

2-inch-diameter soft double-wheel braking caster; black nylon wheels and hood; for use on hard floors only

Applicable on:
Aside® Chairs
Caper Chairs

HCC Caster

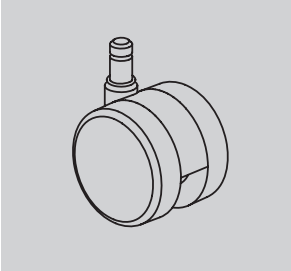

$2^1/_2$-inch-diameter double-wheel low roll resistance caster; black yoke; for use on hard floors or carpet

Applicable on:
Setu Chairs

O2 Caster

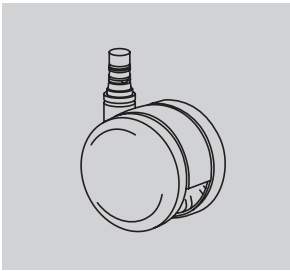

$2^1/_2$-inch-diameter double-wheel caster; nylon wheels and yoke; soft polyurethane tread; quiet roll technology; for use on hard floors or carpet

Applicable on:
Cosm Chairs

SC8 Caster

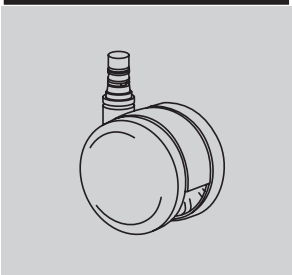

$2^1/_2$-inch-diameter double-wheel caster; black nylon wheels and yoke; soft polyurethane tread; quiet roll technology; for use on hard floors or carpet

Applicable on:
Cosm Chairs
Fuld Nesting Chairs
Lino Chairs
Mirra 2 Chairs
Verus Chairs

U4 Caster

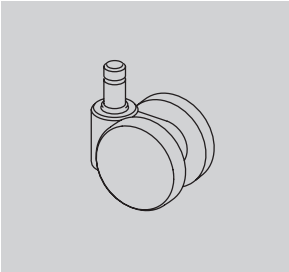

$1^{7}/_{8}$-inch-diameter hard double-wheel caster; black nylon wheels and yoke; for use on carpet only

Applicable on:
Aside Chairs
Verus Chairs

UD Caster

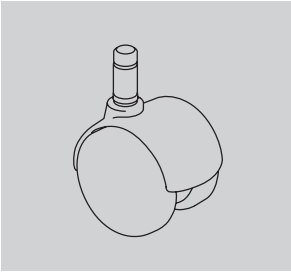

2-inch-diameter hard double-wheel caster; black nylon wheels with painted hood; for use on carpet only

Applicable on:
Eames® Aluminum Group
Eames Executive Chairs
Eames Soft Pad Group
Eames Task Chairs

16 Glide

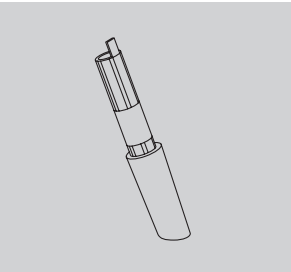

(Front glide shown)

$2^{1}/_{8}$-inch-high glide; black or fog acetal; for use on carpet only

Applicable on:
Sayl Chairs

G4 Glide

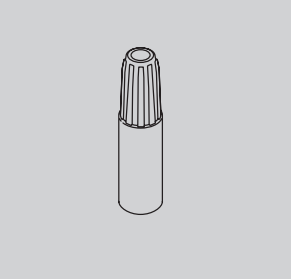

$1^{7}/_{8}$-inch-high glide; black acetal; for use on carpet only

Applicable on:
Verus Chairs

U5 Caster

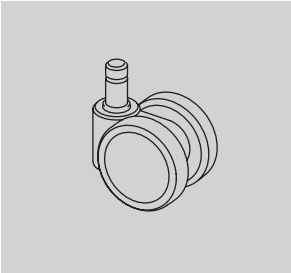

$1^{7}/_{8}$-inch-diameter soft double-wheel caster; black nylon wheels and yoke; for use on hard floors or carpet

Applicable on:
Aside Chairs
Caper Chairs
Verus Chairs

VD Caster

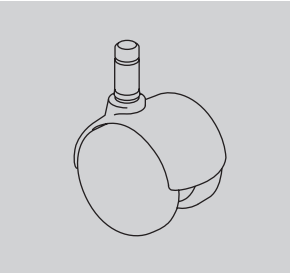

2-inch-diameter hard double-wheel caster; black nylon wheels with integral chrome hood; for use on carpet only

Applicable on:
Eames Aluminum Group
Eames Executive Chairs
Eames Soft Pad Group
Eames Task Chairs

69 Glide

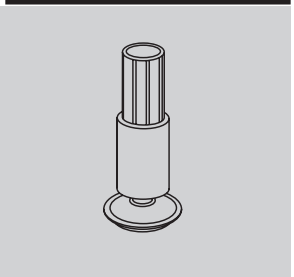

(Front glide shown)

$2^{1}/_{8}$-inch-high glide; black glass-filled nylon stem; steel-plated swivel foot with Floor Saver Glide™ insert; for use on hard floors only

Applicable on:
Sayl Chairs

GD Glide

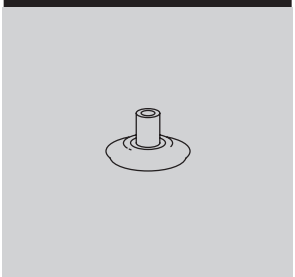

$1^{1}/_{2}$-inch-diameter glide; $^{1}/_{2}$ inch in height; black nylon; for use on hard floors or carpet

Applicable on:
Eames Aluminum Group
Eames Executive Chairs
Eames Soft Pad Group
Eames Task Chairs

GF Glide

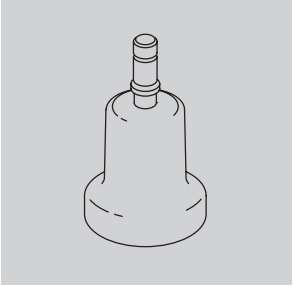

$2^{1}/_{2}$-inch-high glide; black nylon; for use on hard floors or carpet

Applicable on:
New Aeron Chairs
Caper Chairs
Cosm Chairs
Lino Chairs
Mirra 2 Chairs
Sayl Chairs
Verus Chairs

GL Glide

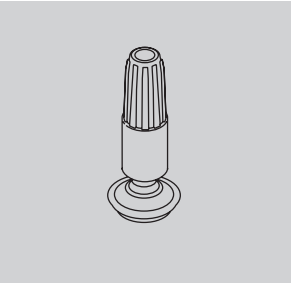

$1^{7}/_{8}$-inch-high glide; black nylon stem; steel-plated swivel foot with Floor Saver Glide™ insert; for use on hard floors only

Applicable on:
Verus chairs

HG Glide

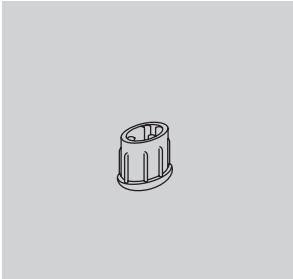

$^{1}/_{2}$-inch-high glide; black nylon glide with stainless-steel insert; for use on hard floors or carpet

Applicable on:
Aside Chairs

SG Glide (for Pronta)

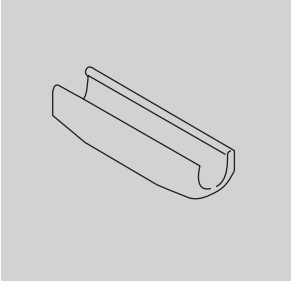

$^{1}/_{2}$-inch-high glide; clear polycarbonate; for use on hard floors or carpet

Applicable on:
Pronta Stacking Chairs

GG Glide

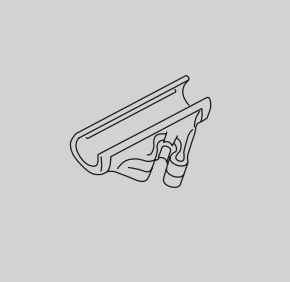

$^{1}/_{2}$-inch-high ganging glide; clear polycarbonate; for use on hard floors or carpet

Applicable on:
Pronta Stacking Chairs

GLN Glide

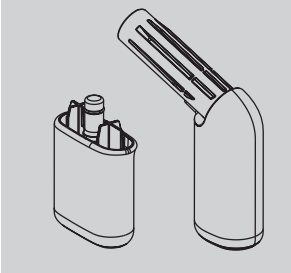

Acetal glide; for use on carpet only

Applicable on:
Fuld Nesting Chairs

SG Glide (for Aside)

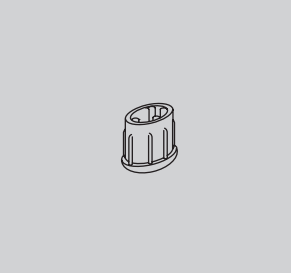

$^{1}/_{2}$-inch-high glide; black nylon; for use on carpet only

Applicable on:
Aside Chairs

X8 Glide

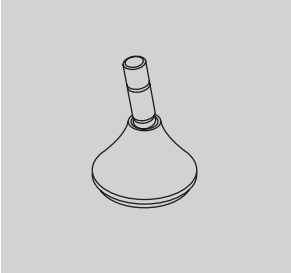

Glide; low profile; for use on hard floors or carpet

Applicable on:
Setu Chairs

XS Glide

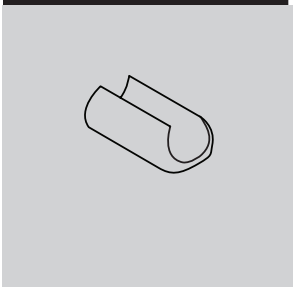

1/8-inch-high glide; polycarbonate in black, fog, clear, and studio white finishes; for use on hard floors or carpet

Applicable on:
Sayl Chairs

YX Glide

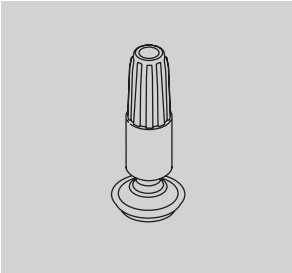

1 7/8-inch-high glide; black nylon stem; steel-plated swivel foot with Floor Saver Glide™ insert; for use on hard floors only

Applicable on:
Caper Chairs

Y7 Glide

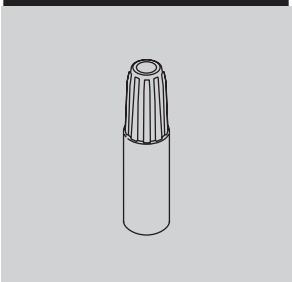

1 7/8-inch-high glide; black acetal; for use on carpet only

Applicable on:
Caper Chairs

Textiles Application Chart — Seating

• *Available*

A *Assigned lead-time textile.*

A *Maharam textiles are on assigned lead times.*

[N] *Non-woven textile.*

See below for exception notes.

	Aeron® Chairs	Asari Work Chairs by Herman Miller™	Cosm™ Chairs	Mirra® 2 Chairs/Stools	Embody® Chairs	Fuld Nesting Chairs	Sayl® Work Chairs/Stools	Sayl Side Chairs	Setu® Chairs/Stools	Zeph® Chairs	Verus™ Work Chairs/Stools Back	Verus Work Chairs/Stools Seat	Verus Side Chairs Back	Verus Side Chairs Seat	Verus Plus Chairs	Aside® Chairs	Caper® Chairs/Stools	Lino™ Chairs Back	Lino Chairs Seat	OE1 Storage Trolley Cushion Top	Public Office Landscape® Seat	Plex® Lounge Furniture	Swoop™ Lounge Seating - Fully Upholstered	Swoop Lounge Seating - Plywood	Valor™ Seating	Eames® Tandem Sling Seating	Cushion Tops	Workspaces
Price Category 1																												
COM Customer's Own Material A							1	1			1	1	1	1	1	1			1	1		1	1	1	1	1	1	1
231_ _ 8Z Pellicle®	•																											
1A7_ _ AireWeave™ 2				•																								
8T_ _ Crossing									•							•				•			•	•			•	•
3DE_ _ Dex							•	•	•		•	•	•	•	•	•				•		19	•		•		•	•
4RM_ _ Duo																		•										
6V_ _ Flexnet™																	•											
845_ _ Intercept			•																									
365_ _ Interweave 2											•		•															
4W_ _ Lyris 2™									•																			
1MN_ _Monologue							24	22	•			•	•	•					•	•		•	•	•	•		•	•
5H2_ _ Ripple 3D Knit										•																		
5H1_ _ Splash 3D Knit										•																		
4SC_ _ Scatter							•	•	•		•	•	•	•	•	•			•	•		•	•	•			•	•
3DN_ _ Scribe							25	22	•			•		•	•	•			•	•					•		•	
3DK_ _ Stretch Knit A							25																					
235_ _ Tailored							•	•	•		•	•	•	•		•			•			23			•		7	•
9NK_ _ Tuck 3D Knit						•																						
1WS_ _Whisper							24	•	•			•	•	•	•	•			•	•		•	•	•	•		•	•
Price Category 2																												
3AR_ _ Aristo							•	•	•		•	•	•	•	•	•			•	•		•	•		9		•	•
92_ _ Crepe							•	•	•		•	•	•	•	•	•			•	•		•	•	•	•		•	•
3EP_ _ Epic							•	•			•	•	•	•		•			•				•		•		7	•
3DP_ _ Hint							•	•				•		•	•	•			•					•	•		•	•
1MV_ _ Marvel [N]							25	22	•											•					•		•	
1HA_ _ Medley					•		•	22			•	•	•	•	•	•			•	•		•	•		•		•	•
4ME_ _ Mellow							•	22	•		•	•	•	•	•	•			•	•			•	•	•		•	•
ZMA_ _ Metaphor - Maharam A							16	16	•			•		•	•	•			•			•	•	•	•			•
8I1_ _ Muse - Maharam A							16	16				•		•					•		•				26			•
30_ _ Rhythm					23		•	•			•	•	•	•	•	•			•	•			•	•	•		•	
3SL_ _ Sequel [N]							•	•	•		•	•	•	•	•	8			•	•		•	•	•	•	23	•	•
4TE_ _ Terra							•	22			•	•	•	•	•	•			•				•	•	•		7	•
8R_ _ Twist							•	•	•		•	•	•	•	•	•			•	•		•	•	•	•		•	•
Price Category 3																												
3AC_ _ Ace							25	•			•	•	•	•	•	8			•	•		19			•		•	
43Z_ _ Fractal							•	•	•		•	•	•	•	•	•			•			•	•	•	•		•	•
8M_ _ Latitude™				23																								
ZM2_ _ Meld - Maharam * A		•					•	•	•		•	•	•	•		8			•	•	•	•	•				•	•
4GE_ _ Parcel							•	•	•			•	•	•	•				•			•	•	•	•		•	•
Price Category 4																												
3DM_ _Daydream							25	•	•			•		•	•	•			•	•		•	•	•			•	•
ZLR_ _ Lariat - Maharam [N] A							•	•	•		•	•	•	•	•					•	•	20			•		•	
3SY_ _ Sync					•		•	•	•		•	•	•	•		•			•			•	•	•	•		•	

continued on next page

Textiles Application Chart — Seating continued

• *Available*

A *Assigned lead-time textile.*

A *Maharam textiles are on assigned lead times.*

[N] *Non-woven textile.*

See below for exception notes.

	Aeron® Chairs	Asari Work Chairs by Herman Miller™	Cosm™ Chairs	Mirra® 2 Chairs/Stools	Embody® Chairs	Fuld Nesting Chairs	Sayl® Work Chairs/Stools	Sayl Side Chairs	Setu® Chairs/Stools	Zeph® Chairs	Verus™ Work Chairs/Stools Back	Verus Work Chairs/Stools Seat	Verus Side Chairs Back	Verus Side Chairs Seat	Verus Plus Chairs	Aside® Chairs	Caper® Chairs/Stools	Lino™ Chairs Back	Lino Chairs Seat	OE1 Storage Trolley Cushion Top	Public Office Landscape® Seat	Plex® Lounge Furniture	Swoop™ Lounge Seating - Fully Upholstered	Swoop Lounge Seating - Plywood	Valor™ Seating	Eames® Tandem Sling Seating	Cushion Tops	Workspaces
Price Category 5																												
3CY _ _Cozy							•	•	•		•	•	•	•	•	•			•			•	•	•	•		•	
14A _ _Hopsak							•	•	•		•	•	•	•	•	•			•	•		•	•	•	•		•	•
40G_ _Method - Maharam A							16	16	•		•	•	•	•	•				•	•	•	•	•		•		•	•
ZNC_ _Nico - Maharam A							•	•			•	•	•	•	•	•			•		•	•	•	•	•		•	
3SU _ _Summit [N]							•	•	•		•	•	•	•	•				•			•	•	•	•		•	
Price Category 6																												
35_ _ Balance					•																							
Price Category 7																												
COL Customer's Own Leather A	1															8				1							1	
ZB3_ _Beck - Maharam A							16	16	•			•		•	•	•			•		•	•	•	•	•		•	
Price Category 8																												
ZLU_ _Luce - Maharam A		•					16	16	•			•		•	•	•			•		•	•	•	•	•		•	
Price Category 9																												
ZC0_ _ Campana - Maharam A							16	16				•		•	•	•			•		•	•	•	•	•		•	
ZGE_ _Gemma - Maharam A							•	•	•		•	•	•	•	•	•			•		•	•	•	•	•		•	
ZJA_ _ Jasper - Maharam A							16	16				•		•	•	•			•		•				•		7	
21_ _ Leather [N]	23															8			•	•				•			•	
Price Category 10																												
3KH_ _Firma - Maharam A							16		•		•	•	•	•	•	•			•		•	•	•	•	•		•	
ZGF_ _Gemma Multi - Maharam A							•	•	•		•	•	•	•	•	•			•		•	•	•	•	•		•	
ZGF_ _Gemma Multi Reverse - Maharam A							•	•	•		•	•	•	•	•	•			•		•	•	•	•	•		•	
ZP4_ _ Petra - Maharam A							16	16				•		•	•	•			•		•	•	•	•			•	
Price Category A																												
No fabrics available at this time.																												
Price Category B																												
VM_ _ Medium - Maharam A							•	•			•	•		•	•	•			•	•					•		•	•
TI_ _ Messenger - Maharam * A							•	•	•		•	•	•	•		•			•	•		•	•	•	26		•	•
Price Category C																												
Z27_ _Manner - Maharam A							•	•				•		•		•			•	•		•	•	•	•		•	•
887_ _Merit - Maharam A							•	•			•	•	•	•		•			•	•	•	•	•	•			•	
Z3_ _ Metric - Maharam A							•	•			•	•	•	•	•	•			•	•		•	•	•	•		•	•
8EY_ _Murmur - Maharam A							•	16				•		•		•			•		•	•	•		•		7	
Price Category D																												
8I8_ _ Bluff - Maharam [N] A							16	16			•	•	•	•	•	8					•	21		•	•		•	
ZMD_ _ Mode - Maharam A							18	•	•		•	•	•	•	•	•				•		•	•	•			•	•
Price Category E																												
ZAT_ _Article - Maharam [N] A							16	16			•	•	•	•					•		•				•		7	

continued on next page

Textiles Application Chart — Seating continued

• *Available*

A *Assigned lead-time textile.*

A *Maharam textiles are on assigned lead times.*

[N] *Non-woven textile.*

See below for exception notes.

	Aeron® Chairs	Asari Work Chairs by Herman Miller™	Cosm™ Chairs	Mirra® 2 Chairs/Stools	Embody® Chairs	Fuld Nesting Chairs	Sayl® Work Chairs/Stools	Sayl Side Chairs	Setu® Chairs/Stools	Zeph® Chairs	Verus™ Work Chairs/Stools Back	Verus Work Chairs/Stools Seat	Verus Side Chairs Back	Verus Side Chairs Seat	Verus Plus Chairs	Aside® Chairs	Caper® Chairs/Stools	Lino™ Chairs Back	Lino Chairs Seat	OE1 Storage Trolley Cushion Top	Public Office Landscape® Seat	Plex® Lounge Furniture	Swoop™ Lounge Seating - Fully Upholstered	Swoop Lounge Seating - Plywood	Valor™ Seating	Eames® Tandem Sling Seating	Cushion Tops	Workspaces
Price Category F																												
82T_ _Apt - Maharam [N] A							18	•					•	•							•				•		7	
871_ _Brindle - Maharam A							16	16				•		•		•			•	•	•				•		•	
87Z_ _Conduit - Maharam A							16	16			•	•	•	•		•			•		•						7	
74M_ _Instill - Maharam [N] A							18	16			•	•	•	•					•		•	•		•	•		7	
89N_ _ Keen - Maharam A							16	16				•		•	•	•			•		•	•	•	•				
V9G_ _ Ledger - Maharam [N] A							18	16			•	•		•	•				•	•					•		•	
ZLL_ _ Loop - Maharam A							16	16				•		•		8			•		•				•			
82A_ _Multiply - Maharam A							16	16			•	•	•	•		•			•		•		•	•	•			
8LW_ _Pepper - Maharam A							16	16				•		•		•			•		•	21	•		9			•
Z33_ _Strum - Maharam [N] A								16															•		•		7	
Price Category G																												
ZC2_ _Compound - Maharam [N] A							16	16			•	•	•	•		8			•			•		•	•		7	
ZF1_ _ Fold - Maharam [N] A							16	16																	•		7	
8AR_ _ Gild - Maharam A								16				•	•	•	•						•	21	•	•	•			
ZPR_ _ Pare - Maharam A							18	16				•		•		8			•		•	•	•		•		7	
ZRF_ _ Runner - Maharam A							16	16												•					•		•	
Price Category H																												
ZT_ _ Circles - Maharam A							16	16																			•	
ZK_ _ Dot Pattern - Maharam A							•	•	•			•		•		•				•					•		•	
ZL_ _ Small Dot Pattern - Maharam A							•	•	•			•		•		•				•					•		•	
Price Category I																												
7CW_ _Cursive - Maharam A							16	16			•	•	•	•		8			•	•	•		•		•		•	
ZSY_ _ Study - Maharam A																				•					•			
Price Category J-K																												
No fabrics available at this time.																												
Price Category L																												
ZMK_ _ Minicheck - Maharam A							•	•				•	•	•		•			•						•		7	
Price Category M																												
ZF2_ _ Fruit - Maharam A								16								•											7	
Price Category N-Q																												
No fabrics available at this time.																												
Price Category R																												
Stow Leather		•																										
Price Category S-Z																												
No fabrics available at this time.																												

continued on next page

Textiles Application Chart — Seating continued

• *Available*

A *Assigned lead-time textile.*
A *Maharam textiles are on assigned lead times.*
[N] *Non-woven textile.*

See below for exception notes.

Application Note: Herman Miller cannot guarantee material/pattern alignment in adjacent products. For example, a fabric's pattern may not align from one pedestal cushion top to the next, or from one chair to another.

** Available in select colors on 20-day lead-time. Refer to "Maharam Colors - Seating" for 20-day colors.*

1 *Refer to price book appendices and Omni for COM/COL information.*
7 *Available on 1" Cushion Tops only.*
8 *Only available on the Aside nonupholstered outer back option (PB).*
9 *Available on Valor upholstered seat only.*
16 *Available on Sayl Chair seat.*
18 *Available on Sayl Chair seat and upholstered mid-back.*
19 *Available on Plex seat only.*
20 *Not available on Plex Club Chair with Headrest.*
21 *Available on Plex seat and on Ottoman.*
22 *Not available on Sayl side chairs with upholstered backs.*
23 *Available in select colors. Refer to "Textile Colors" for color offering.*
24 *Not available on Sayl upholstered High-Back Work Chairs.*
25 *Not available on Sayl upholstered back work chairs.*
26 *Available in select colors. Refer to "Textile Colors" for color offering.*

Price Category 1

Customer's Own Material

See Order Information in Appendices. Assigned lead-time textile. A

8Z Pellicle®

Seating
For New Aeron® Chairs
56% elastomeric
44% polyester

23101	Mineral
23102	Carbon
23103	Graphite

AireWeave™ 2

Seating
For Mirra® 2 Chairs
67% elastomeric
33% antimony-free polyester

1A701	Alpine
1A702	Slate Grey
1A703	Graphite
1A704	Lime Green
1A705	Cappuccino
1A706	Urban Orange
1A707	Dark Turquoise
1A708	Twilight

Chain

Workspaces
66" wide
100% recycled polyester
with 12% ocean bound plastic

2V01	Pearl
2V02	Oyster
2V03	Wheat
2V04	Linen
2V05	Wicker
2V06	Bamboo
2V07	Sage
2V08	Spring Wood
2V09	Iceberg

Crossing

Seating/Workspaces
54" wide
86% antimony-free polyester
14% polyester

8T03	Wicker *
8T04	Porcelain *
8T05	Warm Grey *
8T10	Tomato
8T17	Cerulean
8T18	Indigo
8T19	Shale *
8T22	Tin *
8T23	Graphite
8T24	Black

Crossing

Workspaces
For workspaces products only.
54" wide
86% antimony-free polyester
14% polyester

8501	Ivory *
8502	Oyster *

* Colors available on Exclave® Video-friendly Tackable Boards and Stowage Tackable Backdrop

Dex

Ancillary/Seating/Workspaces
54" wide
67% recycled polyester
33% polyester

3DE01	Frost
3DE02	Silver Pine
3DE03	Stone
3DE04	Shale
3DE05	Charcoal
3DE06	Gossamer
3DE07	Pine

Duo

Seating
For Lino™ Chairs
52% polyester
48% elastomeric

4RM01	Mineral
4RM02	Poppy
4RM03	Green Leaf
4RM04	Jade
4RM05	Shadow
4RM06	Graphite

Flexnet™

Seating
For Caper® Chairs
69% elastomeric
31% polyester

6V01	Black
6V02	Silver Grey

Grasscloth

Workspaces
66" wide
100% recycled polyester
with 11% ocean bound plastic

2I01	Silver Birch
2I02	Pampas
2I03	Sedge
2I07	Lea
2I08	Taro
2I09	Steam Grey
2I13	Gravel

Intercept

Seating
For Cosm™ Chairs
60% elastomeric
40% polyester

84501	Graphite
84502	Carbon
84503	Mineral
84504	Nightfall
84505	Glacier
84506	Canyon

Interweave 2

Seating
For Verus™ Chairs
65% elastomeric
35% polyester

36501	Iceberg
36502	Poppy
36503	Beachglass
36504	Blue Grotto
36505	Slate
36506	Shale

Lyris 2™

Seating
For Setu® Chairs
74% elastomeric
26% polyester

4W21	Alpine
4W23	Chartreuse
4W25	Berry Blue
4W26	Slate Grey
4W28	Chino
4W31	Graphite

Monologue

Ancillary/Seating/Workspaces
54" wide
56% recycled polyester
44% polyester

1MN01	Linen
1MN02	Alabaster
1MN04	Folkstone
1MN05	Silver Pine
1MN06	Slate
1MN07	Seed
1MN09	Persimmon
1MN11	Meadow
1MN12	Blue Sky
1MN13	Blue Spruce
1MN14	Deep Sea

Price category 1 continued on next page

- Maharam textiles are on assigned lead times A.
- Fabric numbers are listed as Herman Miller fabric number/Maharam fabric number.

Price Category 1
continued

Resonance
Workspaces
66” wide
100% polyester

5T04	Greige
5T05	Porcelain
5T06	Alabaster
5T15	Iris
5T28	Sugar
5T47	Tobacco
5T54	Saltbush
5T57	Seed
5T58	Sepia
5T60	Iceberg
5T65	Red
5T67	Boysenberry
5T68	Pistachio
5T69	Green Apple
5T71	Jade
5T72	Blue Green
5T74	Twilight

Ripple 3D Knit
Seating
Available only on Zeph® Chairs.
knit to size
99% recycled polyester
1% lycra

5H201	Black
5H202	Carbon
5H203	Alpine
5H204	Silt
5H205	Tea Rose
5H206	Cocoa
5H207	Persimmon
5H208	Blaze
5H209	Cayenne
5H210	Falcon
5H211	Mustard Seed
5H212	Patina
5H213	Olive
5H214	Moss
5H215	Aloe
5H216	Glacier
5H217	Ultramarine
5H218	Nightfall
5H219	Bluebell
5H220	Boysenberry
5H221	Nightfall/Bluebell
5H222	Patina/Alpine
5H223	Cayenne/Glacier
5H224	Tea Rose/Olive
5H225	Silt/Blaze

Scatter
Ancillary/Seating/Workspaces
54” wide
100% recycled polyester,
with 26% ocean bound plastic

4SC01	Alpine
4SC02	Fog
4SC03	Shale
4SC04	Persimmon
4SC07	Olive
4SC08	Glacier
4SC09	Blue Sky
4SC10	Lagoon
4SC11	Slate Grey
4SC12	Blue Black

Scribe
Seating/Workspaces
54” wide
100% recycled polyester
with 53% ocean bound plastic

3DN01	Spring Wood
3DN02	Poplar
3DN03	Pewter
3DN04	Deep Sea
3DN05	Fir
3DN06	Nutmeg

Slant
Workspaces
66” wide
51% polyester
49% recycled polyester

22F04	Pesto
22F06	Neptune
22F07	Blueberry
22F10	Pumpkin
22F12	Silver Birch
22F13	Bluestone
22F15	Shale

Splash 3D Knit
Seating
Available only on Zeph® Chairs.
knit to size
98% recycled polyester
2% lycra

5H101	Black
5H102	Carbon
5H103	Alpine
5H104	Silt
5H105	Tea Rose
5H106	Cocoa
5H107	Persimmon
5H108	Blaze
5H109	Cayenne
5H110	Falcon
5H111	Mustard Seed
5H112	Patina
5H113	Olive
5H114	Moss
5H115	Aloe
5H116	Glacier
5H117	Ultramarine
5H118	Nightfall
5H119	Bluebell
5H120	Boysenberry

Stretch Knit
Seating
Assigned lead-time textile. A
Available only on Sayl®
Suspension Back Work Chairs
97% polyester, 3% spandex

3DK01	Fog
3DK02	Slate Grey
3DK03	Java
3DK04	Black
3DK05	Red
3DK06	Green Apple
3DK07	Berry Blue

Price category 1 continued on next page

- Maharam textiles are on assigned lead times A.
- Fabric numbers are listed as Herman Miller fabric number/Maharam fabric number.

Price Category 1
continued

Tailored	
Ancillary/Seating/Workspaces	
54” wide	
56% polyester	
44% recycled polyester	
23501	Studio White * **
23502	Sugar *
23503	Tomato
23506	Chive
23508	Cobalt
23509	Cadet
23510	Fog
23511	Graphite
23512	Black
23513	Coffee

* Colors not available on Plex™ Lounge Furniture.
** Color not available on Canvas Tiles.

Tuck 3D Knit	
Seating	
Available only on Fuld Nesting Chairs.	
knit to size	
56% polyester	
44% recycled polyester	
9NK01	Alpine
9NK02	Carbon
9NK03	Nightfall
9NK04	Olive
9NK05	Cocoa
9NK06	Canyon

Whisper	
Ancillary/Seating/Workspaces	
54” wide	
73% recycled polyester	
27% polyester	
with 11.3% ocean bound plastic	
1WS01	Sand Dollar
1WS02	Pebble
1WS03	Silver Birch
1WS04	Iceberg
1WS05	Silver Pine
1WS06	Carbon
1WS07	Cumin
1WS12	Willow
1WS13	Sea Grass
1WS14	Pool
1WS15	Blueberry
1WS16	Glacier
1WS17	Grey
1WS18	Canyon

Price Category 2

Aristo	
Ancillary/Seating/Workspaces	
54” wide	
88% recycled polyester	
12% polyester	
Acrylic backing	
3AR01	Forest Moss
3AR02	Light Brindle
3AR03	Mink
3AR04	Copper
3AR05	Adobe
3AR06	Cherry
3AR07	Lilac
3AR08	Green Apple
3AR09	Surf
3AR10	Waterfall
3AR11	Cadet
3AR12	Tin
3AR13	Pewter
3AR14	Grey Brindle
3AR15	Grey Black

Cord	
Workspaces	
66” wide	
51% antimony-free polyester	
49% polyester	
5101	Ivory
5102	White Ash
5103	Linen
5104	Bamboo
5105	Sepia
5107	Sesame
5109	Bayou
5111	Spring Wood
5112	Summer White

Crepe	
Ancillary/Seating/Workspaces	
54” wide	
100% recycled polyester, with 43.6% ocean bound plastic	
9201	Licorice
9203	Smoke
9207	Cherry
9223	Cadet
9241	Beachglass
9249	Stone *
9251	Fog *
9252	Slate Grey
9261	Shale
9262	Graphite
9265	Mineral
9266	Persimmon
9267	Juniper
9268	Glacier
9269	Cascade
9270	Navy

* Colors available on Exclave® Video-friendly Tackable Boards and Stowage Tackable Backdrop.

Price category 2 continued on next page

- Maharam textiles are on assigned lead times A.
- Fabric numbers are listed as Herman Miller fabric number/Maharam fabric number.

Price Category 2
continued

Epic
Ancillary/Seating/Workspaces
54” wide
56% recycled polyester
44% polyester
Acrylic backing

3EP01	Alabaster
3EP02	Smoke
3EP03	Falcon
3EP05	Copper
3EP06	Urban Orange
3EP07	Poppy
3EP10	Clover
3EP11	Loden
3EP14	Peacock
3EP15	Cadet
3EP16	Indigo
3EP17	Spring Wood
3EP18	Grey Brindle
3EP19	Seed
3EP20	Carbon Dark

Hint
Ancillary/Seating/Workspaces
54” wide
76% recycled polyester
24% polyester

3DP01	Sediment
3DP02	Gunmetal
3DP03	Silt
3DP04	Porcelain
3DP05	Indigo
3DP06	Fern
3DP07	Adobe
3DP08	Red Sea

Horizon
Workspaces
54” wide
65% antimony-free polyester
35% polyester

4N01	Rye Grass
4N02	Sugar Pine
4N03	Silver Pine
4N04	White Ash
4N05	Spring Wood
4N08	Haystack
4N09	Oat Grass
4N13	Pine Cone
4N15	Elderberry

Marvel
Ancillary/Seating
54” wide
100% pvc-free polyurethane
antimicrobial, antibacterial finish

1MV01	Summer White
1MV02	Sand Dollar
1MV03	Espresso
1MV04	Folkstone Grey
1MV05	Graphite
1MV06	Onyx
1MV07	Polar Blue
1MV08	Blush Grey
1MV12	Red
1MV14	Pine
1MV15	Teal Green
1MV16	Twilight

Medley
Ancillary/Seating/Workspaces
54” wide
100% polyester

1HA01	Stone *
1HA02	Trail
1HA03	Charcoal
1HA04	Cinder
1HA07	Chutney
1HA09	Feather Grey *
1HA11	Loden
1HA13	Bayou *
1HA14	Blue Grotto
1HA15	Blueberry
1HA22	Khaki
1HA23	Pewter
1HA24	Yellow Oxide
1HA25	Vintage Rose
1HA26	Raspberry
1HA27	Acai Berry

* Colors available on Exclave®
Video-friendly Tackable Boards
and Stowage Tackable Backdrop

Mellow
Ancillary/Seating/Workspaces
54” wide
100% recycled polyester,
with 16% ocean bound plastic

4ME01	Mineral
4ME04	Olive
4ME05	Glacier
4ME06	Oceanside
4ME07	Charcoal

Metaphor – Maharam
Ancillary/Seating/Workspaces
54” wide
100% polyester
Acrylic backing

ZMA01/466553-001	Afterfeather *
ZMA02/466553-002	Moonflower
ZMA03/466553-003	Handcraft
ZMA04/466553-004	Crossroad
ZMA05/466553-005	Chondrite
ZMA06/466553-006	Detective
ZMA07/466553-007	Steamship
ZMA08/466553-008	Electricity
ZMA09/466553-009	Takeoff
ZMA10/466553-010	Parachute
ZMA11/466553-011	Blueshift
ZMA12/466553-012	Dockyard
ZMA13/466553-013	Bathe
ZMA14/466553-014	Icebound
ZMA15/466553-015	Thermosphere
ZMA16/466553-016	Aboard
ZMA17/466553-017	Agateware
ZMA18/466553-018	Homeland
ZMA19/466553-019	Rockfall
ZMA20/466553-020	Undergrowth
ZMA21/466553-021	Gremolata
ZMA22/466553-022	Patina
ZMA23/466553-023	Sylvan
ZMA24/466553-024	Outfield
ZMA25/466553-025	Windbreak
ZMA26/466553-026	Saguaro

Price category 2 continued on next page

- Maharam textiles are on assigned lead times A.
- Fabric numbers are listed as Herman Miller fabric number/Maharam fabric number.

Price Category 2
continued

Metaphor *continued*	
ZMA27/466553-027	Barnwood
ZMA28/466553-028	Cookshop
ZMA29/466553-029	Amandine
ZMA30/466553-030	Bodhran
ZMA31/466553-031	Centerstage
ZMA32/466553-032	Focaccia
ZMA33/466553-033	Bumblebee
ZMA34/466553-034	Microbrew
ZMA35/466553-035	Sauna
ZMA36/466553-036	Gazebo
ZMA37/466553-037	Pirouette
ZMA38/466553-038	Heartbeat
ZMA39/466553-039	Shino
ZMA40/466553-040	Sunrise
ZMA41/466553-041	Florist
ZMA42/466553-042	Beadwork
ZMA43/466553-043	Framboise
ZMA44/466553-044	Wisteria
ZMA45/466553-045	Warrior

* Colors not available on Eames Aluminum Group, Soft Pad, Sofa Compact, Molded Fiberglass/Plastic Chairs, Task Chair, Wire Chairs, Nelson Platform Bench Cushion, Swoop Plywood Lounge Chair.

Muse – Maharam	
Ancillary/Seating/Workspaces	
54” wide	
100% post-consumer recycled polyester	
8I101/466487-001	Crescendo
8I102/466487-002	Resonate
8I103/466487-003	Runway
8I104/466487-004	Ascend
8I105/466487-005	Veil *
8I106/466487-006	Refresh *
8I107/466487-007	Clear *
8I108/466487-008	Fantasy
8I109/466487-009	Miso
8I110/466487-010	Compass
8I111/466487-011	Bergamot *
8I112/466487-012	Grasshopper

Muse *continued*	
8I113/466487-013	Goal
8I114/466487-014	Mistletoe
8I115/466487-015	Seaglass *
8I116/466487-016	Frigid
8I117/466487-017	Riverbend
8I118/466487-018	Noble
8I119/466487-019	Pulsar
8I120/466487-020	Velella
8I121/466487-021	Sailboat
8I122/466487-022	Sparse
8I123/466487-023	Vase
8I124/466487-024	Haven
8I125/466487-025	Mead
8I126/466487-026	Neat
8I127/466487-027	Jovial
8I128/466487-028	Theater
8I129/466487-029	Poinsettia
8I130/466487-030	Celebrate
8I131/466487-031	Spectacle

* Colors not available on Valor Seating.

Rhythm	
Ancillary/Seating	
54” wide	
100% polyester	
3002	Green Apple
3004	Bayou
3005	Berry Blue
3006	Iris
3007	Twilight
3009	Poppy
3010	Molasses
3012	Khaki
3013	Mink
3014	Black *
3015	Charcoal *

* Colors available on Embody® Chair.

Sequel	
Ancillary/Seating/Workspaces	
54” wide	
100% vinyl	
100% polyester knit backing	
Resilience® finish	
3SL01	White
3SL02	Pebble
3SL03	Mushroom
3SL04	Stone
3SL06	Rattan
3SL09	Seal
3SL10	Blue Fog
3SL11	Folkstone
3SL12	Shale
3SL13	Slate Grey
3SL14	Charcoal
3SL15	Carbon Dark
3SL28	Navy *

* Color available on Eames® Tandem Sling Seating.

Terra	
Ancillary/Seating/Workspaces	
54” wide	
100% post-consumer recycled biodegradable polyester *	
4TE01	Spring Wood
4TE02	Zinc
4TE03	Pine Cone
4TE04	Charcoal

* 1% biodegradation in 1,278 days under ASTM D5511 conditions. No evidence of further degradation.

Twine	
Workspaces	
66” wide	
100% recycled polyester	
3TW01	Silver Birch
3TW02	Ivory
3TW03	Alabaster
3TW04	Bamboo
3TW05	Iceberg
3TW06	Charcoal
3TW07	Feather Grey
3TW08	Shale

Twist	
Ancillary/Seating/Workspaces	
54” wide	
80% antimony-free polyester	
13% recycled polyester	
7% polyester	
8R05	Wicker
8R10	Poppy
8R14	Tin
8R15	Shale
8R16	Graphite
8R17	Birch
8R18	Sepia
8R22	Blueberry
8R23	Green Apple
8R26	Gunmetal
8R27	Cinder
8R29	Pekoe
8R33	Forest
8R35	Waterfall
8R36	Midnight Blue
8R37	Carbon Dark

Twist	
Workspaces	
For workspaces products only.	
54” wide	
80% antimony-free polyester	
13% recycled polyester	
7% polyester	
5S03	Oyster

- Maharam textiles are on assigned lead times A.
- Fabric numbers are listed as Herman Miller fabric number/Maharam fabric number.

Price Category 3

Ace

Ancillary/Seating
54” wide
100% polyurethane
Polyester knit backing
Stain resistant finish

3AC01	Summer White
3AC02	White Ash
3AC03	Rye
3AC04	Metal
3AC05	Clay
3AC06	Chestnut
3AC08	Camelback
3AC09	Chipotle
3AC12	Artichoke
3AC13	Sepia Dark
3AC14	Aloe
3AC15	Flint
3AC16	Blue Sky
3AC17	Oceanside
3AC18	Midnight
3AC20	Frost
3AC21	Lead
3AC22	Black

Fractal

Ancillary/Seating/Workspaces
58” wide
84% recycled polyester
16% polyester

43Z01	Granite
43Z02	Golden Olive
43Z03	Verdant
43Z04	Cadet

Ground Cloth®

Workspaces
66” wide
100% polyester

4701	Vapor Grey
4721	Warm White *
4722	Fog *
4723	Straw *
4724	Red Orange *
4726	Green Apple *
4727	Caribbean *
4728	Midnight *
4729	Cappuccino *

* Colors available on Exclave® Video-friendly Tackable Boards and Stowage Tackable Backdrop

Latitude

Seating
Colors for Mirra 2 Chairs
100% polyester

8M10	Alpine
8M17	Black
8M21	Slate Grey
8M23	French Press
8M25	Dark Turquoise
8M26	Twilight

Meld – Maharam

Ancillary/Seating/Workspaces
54” wide
68% post-consumer recycled polyester
32% polyester
PFOA-Free stain resistant

ZM201/466387-201	Vast
ZM202/466387-202	Panda **
ZM203/466387-203	Skyline *
ZM204/466387-204	Knight **
ZM205/466387-205	Quill **
ZM206/466387-206	Pipe
ZM207/466387-207	Grate *
ZM208/466387-208	Gloss

Meld *continued*

ZM209/466387-209	Bulb
ZM210/466387-210	Bride
ZM211/466387-211	Stark
ZM212/466387-212	Seashell
ZM213/466387-213	Antler
ZM214/466387-214	Crater *
ZM215/466387-215	Perennial
ZM216/466387-216	Mulberry
ZM217/466387-217	Fuchsia *
ZM218/466387-218	Amethyst *
ZM219/466387-219	Merlot
ZM220/466387-220	Magma *
ZM221/466387-221	Rooster
ZM222/466387-222	Heat *
ZM223/466387-223	Clementine
ZM224/466387-224	Fox
ZM225/466387-225	Kiss *
ZM226/466387-226	Bare
ZM227/466387-227	Blonde
ZM228/466387-228	Mimosa
ZM229/466387-229	Comet *
ZM230/466387-230	Honeydew
ZM231/466387-231	Wild *
ZM232/466387-232	Vine
ZM233/466387-233	Seed
ZM234/466387-234	Kale *
ZM235/466387-235	Waterfall *
ZM236/466387-236	Nordic *
ZM237/466387-237	Reef *
ZM238/466387-238	Wave
ZM239/466387-239	Isle **
ZM240/466387-240	Creek
ZM241/466387-241	Mariner *
ZM242/466387-242	Globe
ZM243/466387-243	Spa

* Colors available on 20-day lead time.
** Colors available on 10-day lead time.

Parcel

Ancillary/Seating/Workspaces
54” wide
100% recycled polyester

4GE01	Gunmetal
4GE02	Brindle
4GE03	Bayou
4GE04	Pesto
4GE05	Golden Olive
4GE06	Copper Sea

Saille - Geiger Textile

Ancillary
57” wide
69% cotton
31% polyester
PFOA-Free stain resistant finish
Acrylic backing

18001	Coal
18002	Shale
18003	Haze
18004	Stone
18005	White *
18006	Beach
18007	Sand
18008	Blush
18009	Brick
18010	Fog
18011	Celadon
18012	Poolside
18013	Summer Sky
18014	Lake
18015	Midnight Blue

* Color not available on Eames® Soft Pad Group Chairs/Ottomans.

Price category 3 continued on next page

- Maharam textiles are on assigned lead times A.
- Fabric numbers are listed as Herman Miller fabric number/Maharam fabric number.

Price Category 3
continued

Price Category 4

Strands	
Workspaces	
66” wide	
100% recycled polyester	
8W01	Pebble
8W02	Porcelain
8W03	Taupe
8W04	Honey
8W05	Khaki
8W06	Rye
8W07	Wicker
8W08	Tin
8W09	Cool Grey

Cygnus	
Ancillary	
For Eames® Aluminum Group Chairs	
69% elastomeric	
31% polyester	
5401	Black
5402	Zinc
5403	Quartz

Daydream	
Ancillary/Seating/Workspaces	
54” wide	
48% wool	
41% recycled polyester	
9% nylon	
2% polyester	
3DM01	Rye Grass
3DM02	Silver Birch
3DM03	Pewter
3DM04	Graphite
3DM05	Black
3DM06	Lemongrass
3DM07	Permission
3DM08	Juniper
3DM09	Sea Grass
3DM10	Nightfall

Hush	
Workspaces	
66” wide	
80% polyester	
20% viscose	
1HS01	Canyon
1HS02	Pesto
1HS03	Bayou
1HS04	Greystone
1HS05	Charcoal
1HS06	Rye Grass
1HS07	Cool Grey
1HS08	Dark Grey
1HS09	Aqua Green
1HS10	Nightfall

Kalista - Geiger Textile	
Ancillary	
54” wide	
71% post-industrial recycled cotton	
18% post-industrial recycled polyester	
11% polyester	
PFOA-Free stain resistant finish	
1AL01	Cotton
1AL02	Natural
1AL03	Titanium
1AL04	Pewter
1AL05	Starry Night
1AL06	Red Hot
1AL07	Sun Kissed
1AL08	Dune
1AL09	Beach Glass
1AL10	Bluestone
1AL11	Seaside
1AL12	Night Sky

Lariat – Maharam	
Ancillary/Seating	
54” wide	
100% vinyl	
ZLR01/440401-001	001
ZLR02/440401-002	002
ZLR04/440401-004	004
ZLR06/440401-006	006
ZLR07/440401-007	007
ZLR08/440401-008	008
ZLR10/440401-010	010
ZLR11/440401-011	011
ZLR13/440401-013	013
ZLR14/440401-014	014
ZLR15/440401-015	015
ZLR16/440401-016	016
ZLR18/440401-018	018
ZLR20/440401-020	020
ZLR21/440401-021	021
ZLR24/440401-024	024
ZLR25/440401-025	025
ZLR26/440401-026	026

Lariat *continued*	
ZLR28/440401-028	028
ZLR31/440401-031	031
ZLR32/440401-032	032
ZLR33/440401-033	033
ZLR34/440401-034	034
ZLR38/440401-038	038
ZLR39/440401-039	Granite
ZLR40/440401-040	Linen
ZLR41/440401-041	Stella
ZLR42/440401-042	Saddle
ZLR43/440401-043	Holly
ZLR44/440401-044	Maroon
ZLR45/440401-045	Siren
ZLR46/440401-046	Reseda
ZLR47/440401-047	Purslane
ZLR48/440401-048	Spire
ZLR49/440401-049	Papyrus
ZLR50/440401-050	Chickadee
ZLR51/440401-051	Requiem

Sync	
Ancillary/Seating	
55” wide	
100% polyester	
3SY01	Pine Cone
3SY03	Canyon
3SY04	Truffle
3SY06	Everglade
3SY08	Nightfall
3SY09	Dark Mineral
3SY10	Slate Grey
3SY11	Dark Carbon
3SY12	Black

- Maharam textiles are on assigned lead times A.
- Fabric numbers are listed as Herman Miller fabric number/Maharam fabric number.

Price Category 5

Cozy	
Ancillary/Seating	
54” wide	
100% wool	
3CY01	Heathered Warm Grey
3CY02	Heathered Rye Grass
3CY03	Heathered Cool Grey
3CY05	Heathered Black
3CY06	Heathered Persimmon
3CY07	Heathered Loden
3CY09	Heathered Lagoon
3CY10	Heathered Twilight

Hopsak	
Ancillary/Seating/Workspaces	
56” wide	
100% recycled polyester	
14A20	Black
14A22	Raw Umber Dark
14A26	Grey Blue Dark
14A30	Sepia Dark
14A38	Emerald Dark
14A39	Yellow Dark
14A40	Orange
14A41	Sienna
14A42	Olive Green Dark
14A43	Crimson
14A44	Crimson Dark Dark
14A45	Violet Dark
14A46	Pink Dark Dark
14A47	Ultramarine Dark
14A48	Cobalt Blue
14A49	Terra Cotta
14A50	Ochre Dark

Ingenue - Geiger Textile	
Ancillary	
54” wide	
28% wool	
26% viscose	
25% acrylic	
16% polyester	
5% cotton	
PFOA-Free stain resistant finish	
1GH01	Sand
1GH02	Fog
1GH03	Flannel
1GH04	Trench
1GH05	Vermillion
1GH06	Adriatic
1GH07	Umber
1GH08	Charcoal

Method - Maharam	
Ancillary/Seating/Workspaces	
54” wide	
100% recycled polyester	
with 9% ocean-bound plastic	
40G01/466579-001	Inspire
40G02/466579-002	Rhea
40G03/466579-003	Noise
40G04/466579-004	Speedway
40G05/466579-005	Villanelle
40G06/466579-006	Maestro
40G07/466579-007	Destiny
40G08/466579-008	Possess
40G09/466579-009	Waterside
40G10/466579-010	Relax
40G11/466579-011	Delightful
40G12/466579-012	Parrotlet
40G13/466579-013	Verdurous
40G14/466579-014	Bosky
40G15/466579-015	Acreage
40G16/466579-016	Allude
40G17/466579-017	Tweed
40G18/466579-018	Korma
40G19/466579-019	Fossilize
40G20/466579-020	Cattail
40G21/466579-021	Shortcake
40G22/466579-022	Racecar
40G23/466579-023	Courtship
40G24/466579-024	Jam
40G25/466579-025	Sparrow

Nico - Maharam	
Ancillary/Seating/Workspaces	
54” wide	
63% wool	
21% polyester	
16% solution-dyed nylon	
ZNC01/466564-001	Alcazar
ZNC02/466564-002	Ironclad
ZNC03/466564-003	Tune
ZNC04/466564-004	Bridegroom
ZNC05/466564-005	Diode
ZNC06/466564-006	Jest
ZNC07/466564-007	Sanctuary
ZNC08/466564-008	Aquarius
ZNC09/466564-009	Houseboat
ZNC10/466564-010	Olympian
ZNC11/466564-011	Tennis
ZNC12/466564-012	Dressage
ZNC13/466564-013	Zing
ZNC14/466564-014	Bitterroot
ZNC15/466564-015	Gemini
ZNC16/466564-016	Posh
ZNC17/466564-017	Sizzle
ZNC18/466564-018	Cheerful
ZNC19/466564-019	Watermelon
ZNC20/466564-020	Toucan
ZNC21/466564-021	Rosin
ZNC22/466564-022	Jousting
ZNC23/466564-023	Jojoba
ZNC24/466564-024	Dromedary
ZNC25/466564-025	Toasty
ZNC26/466564-026	Casaba
ZNC27/466564-027	Greenhouse
ZNC28/466564-028	Sibyl
ZNC29/466564-029	Spearmint
ZNC30/466564-030	Pothos
ZNC31/466564-031	Calathea
ZNC32/466564-032	Landscape
ZNC33/466564-033	Espalier
ZNC34/466564-034	Gecko
ZNC35/466564-035	Meditation

Price category 5 continued on next page

- Maharam textiles are on assigned lead times A.
- Fabric numbers are listed as Herman Miller fabric number/Maharam fabric number.

Price Category 5
continued

Price Category 6

Price Category 7

Summit	
Ancillary/Seating	
54” wide	
100% silicone	
Polyester knit backing	
3SU02	Oyster
3SU03	Zinc
3SU04	Sparrow
3SU07	Black
3SU09	Beachglass
3SU10	Midnight

Vionette - Geiger Textile	
Ancillary	
55” wide	
100% polyester	
1GJ01	White Sand Mix
1GJ02	Desert Mix
1GJ03	Light Gray Mix
1GJ04	Pewter Mix
1GJ05	Cobalt Mix
1GJ06	Prussian Blue Mix
1GJ07	Chocolate Mix
1GJ08	Champagne
1GJ09	Morning Sky
1GJ10	Aquatic
1GJ11	Sapphire
1GJ12	Midnight Blue
1GJ13	Shadow
1GJ14	Java
1GJ15	Carbon
1GJ16	Black
1GJ17	Claret
1GJ18	Poppy

Balance	
Seating	
For Embody® chairs	
100% polyester	
3512	Carbon
3513	Black

Outdoor Weave	
Ancillary	
For Eames® Aluminum Group	
Outdoor Chairs	
50% elastomeric	
50% polypropylene	
7203	Lead
7205	Graphite

Customer’s Own Leather
See Order Information in Appendices. Assigned lead-time textile. A

Beck – Maharam	
Ancillary/Seating	
55” wide	
78% wool	
22% nylon	
ZB301/466571-001	Overshadow
ZB302/466571-002	Molecule
ZB303/466571-003	Zeitgeist
ZB304/466571-004	Blacksmith
ZB305/466571-005	Cornerstone
ZB306/466571-006	Chainmail
ZB307/466571-007	Buckram
ZB308/466571-008	Callisto
ZB309/466571-009	Interlude
ZB310/466571-010	Letterpress
ZB311/466571-011	Memoir
ZB312/466571-012	Litmus
ZB313/466571-013	Stoic
ZB314/466571-014	Inkpad
ZB315/466571-015	Praxis
ZB316/466571-016	Astute
ZB317/466571-017	Percolate
ZB318/466571-018	Halocline
ZB319/466571-019	Semblance
ZB320/466571-020	Loch
ZB321/466571-021	Lido
ZB322/466571-022	Underwater
ZB323/466571-023	Tetrapod
ZB324/466571-024	Nymph
ZB325/466571-025	Appalachian

Beck *continued*		
ZB326/466571-026	Menthol	
ZB327/466571-027	Woodruff	
ZB328/466571-028	Malachite	
ZB329/466571-029	Botanist	
ZB330/466571-030	Woodlet	
ZB331/466571-031	Katydid	
ZB332/466571-032	Exuberant	
ZB333/466571-033	Retrospect	
ZB334/466571-034	Lambic	
ZB335/466571-035	Argil	
ZB336/466571-036	Brushstroke	
ZB337/466571-037	Candescent	
ZB338/466571-038	Reedbuck	
ZB339/466571-039	Clayware	
ZB340/466571-040	Curio	
ZB341/466571-041	Whimsy	
ZB342/466571-042	Effervescent	
ZB343/466571-043	Lingonberry	
ZB344/466571-044	Resplendent	
ZB345/466571-045	Hollyhock	
ZB346/466571-046	Filigree	
ZB347/466571-047	Plutonic	
ZB348/466571-048	Foundry	
ZB349/466571-049	Patisserie	
ZB390	Gold	007/032/033 *
ZB391	Russet	036/040/039 *
ZB392	Indigo	008/013/014 *
ZB393	Forest	006/031/028 *

* Colors available only on Girard Color Wheel Ottoman.

Price category 7 continued on next page

- Maharam textiles are on assigned lead times A.
- Fabric numbers are listed as Herman Miller fabric number/Maharam fabric number.

Price Category 7
continued

Bellano - Geiger Textile

Ancillary
55” wide
75% wool
10% linen
8% nylon
7% alpaca

1AX01	Pearl
1AX02	Fog
1AX03	Fawn
1AX04	Pumice
1AX05	Pewter
1AX06	Atlantic
1AX07	Black Green
1AX08	Adriatic
1AX09	Coffee
1AX10	Charcoal
1AX11	Umber
1AX12	Magenta
1AX13	Bittersweet
1AX14	Sunflower

Capri - Geiger Textile

Ancillary
55” wide
36% cotton
32% acrylic
24% rayon
8% polyester
PFOA-Free stain resistant finish
Acrylic backing

17201	Snow
17202	Stone
17203	Trench
17204	Graphite
17205	Anthracite
17206	Light Silver
17207	Russet
17208	Chestnut Brown
17209	Sand
17210	Sterling
17211	Cobalt
17212	Ink

Milaner - Geiger Textile

Ancillary
55” wide
56% wool, 10% acrylic
10% alpaca, 10% cotton
8% nylon, 6% rayon

17101	Linen
17102	Flax
17103	Bark
17104	Deep Navy
17105	Charcoal
17106	Medium Grey
17107	Ash
17108	Crimson

Panno di Dolce - Geiger Textile

Ancillary
55” wide
65% wool
20% nylon
15% alpaca

1AV01	Fog
1AV02	Dune
1AV03	Trench
1AV04	Flannel
1AV05	Charcoal
1AV06	Umber
1AV07	Deep Navy
1AV08	Graphite
1AV09	Orange
1AV10	Pink
1AV11	Deep Red
1AV12	Bright Green
1AV13	Cerulean Blue
1AV14	Deep Cerulean Blue

Pristina - Geiger Textile

Ancillary
55” wide
37% wool
25% viscose
17% acrylic
15% cotton
6% polyester
PFOA-Free stain resistant

1JC01	Dove
1JC02	Goldstone
1JC03	Daybreak
1JC04	Pumice
1JC05	Cappuccino
1JC06	Gunmetal
1JC07	Caspian
1JC08	Café Noir

Resca - Geiger Textile

Ancillary
56” wide
75% wool
10% linen
8% nylon
7% alpaca

1AW01	Fog
1AW02	Dune
1AW03	Trench
1AW04	Flannel
1AW05	Umber
1AW06	Bordeaux

Vesture - Geiger Textile

Ancillary
55” wide
40% wool, 25% polyester
20% silk, 15% nylon
PFOA-Free stain resistant finish

21701	Ashen
21702	Dark Blush
21703	Dusk
21704	Medium Gray
21705	Twilight

Wool Epinglé - Geiger Textile

Ancillary
54” wide
100% wool

16201	Swiss Red
16202	Orange
16203	Light Chestnut Brown
16204	Light Burnt Umber
16205	Pale Native Umber
16207	Grey
16208	Natier Blue
16209	Deep Cerulean Blue
16210	Anthracite
16211	Natural Native Umber
16212	Chestnut Brown

Wool Tweed - Geiger Textile

Ancillary
54” wide
80% wool, 20% nylon

16601	Trench
16602	Pewter
16603	Ruby
16604	Blue Gray
16605	Navy
16606	Umber
16607	Charcoal

- Maharam textiles are on assigned lead times A.
- Fabric numbers are listed as Herman Miller fabric number/Maharam fabric number.

Price Category 8

Breeze - Maharam	
Workspaces	
120” wide	
65% FR polyester	
35% post-consumer recycled FR polyester	
1QG06/283817-006	Meteorite
1QG09/283817-009	Serum

Luce - Maharam	
Ancillary/Seating	
59” wide	
75% post-consumer recycled wool	
20% polyester	
5% nylon	
ZLU01/466566-001	Brioche
ZLU02/466566-002	Blanched
ZLU03/466566-003	Relic
ZLU04/466566-004	Sinter
ZLU05/466566-005	Scoria
ZLU06/466566-006	Austere
ZLU07/466566-007	Pigment
ZLU08/466566-008	Alkali
ZLU09/466566-009	Tidal
ZLU10/466566-010	Imbue
ZLU11/466566-011	Reservoir
ZLU12/466566-012	Brine
ZLU13/466566-013	Undertone
ZLU14/466566-014	Prelude
ZLU15/466566-015	Submerge
ZLU16/466566-016	Cypress
ZLU17/466566-017	Awash

Luce *continued*	
ZLU18/466566-018	Adriatic
ZLU19/466566-019	Province
ZLU20/466566-020	Virescent
ZLU21/466566-021	Nettle
ZLU22/466566-022	Agrarian
ZLU23/466566-023	Serpentine
ZLU24/466566-024	Laurel
ZLU25/466566-025	Clarion
ZLU26/466566-026	Gooseberry
ZLU27/466566-027	Swelter
ZLU28/466566-028	Etruscan
ZLU29/466566-029	Coulis
ZLU30/466566-030	Rubescent
ZLU31/466566-031	Akoya
ZLU32/466566-032	Radiant
ZLU33/466566-033	Regent
ZLU34/466566-034	Spectral
ZLU35/466566-035	Thistle

Tempo – Maharam	
Ancillary	
55” wide	
100% polyester	
Polyester backing	
26S01/466589-001	Chert
26S02/466589-002	Grandstand
26S03/466589-003	Restful
26S04/466589-004	Battleship
26S05/466589-005	Lavender
26S06/466589-006	Dockside
26S07/466589-007	Swimming
26S08/466589-008	Ambience
26S09/466589-009	Adornment
26S10/466589-010	Remedy
26S11/466589-011	Fang
26S12/466589-012	Inshore
26S13/466589-013	Camouflage
26S14/466589-014	Mesclun
26S15/466589-015	Farmland
26S16/466589-016	Tadpole
26S17/466589-017	Purr
26S18/466589-018	Snowman
26S19/466589-019	Beehive
26S20/466589-020	Gazelle
26S21/466589-021	Shiitake
26S22/466589-022	Flaxseed
26S23/466589-023	Crawdad
26S24/466589-024	Flowery
26S25/466589-025	Burgundy
26S26/466589-026	Rangoli
26S27/466589-027	Petunia
26S28/466589-028	Campsite

Whim	
Ancillary	
54” wide	
34% viscose	
33% acrylic	
17% wool	
8% polyester	
9DA01	Warm White
9DA02	Rye
9DA03	Mustard Seed
9DA04	Terra Cotta
9DA05	Fir
9DA06	Navy
9DA07	Pewter

- Maharam textiles are on assigned lead times A.
- Fabric numbers are listed as Herman Miller fabric number/Maharam fabric number.

Price Category 9

Alpaca Mohair - Geiger Textile	
Ancillary	
54” wide	
63% alpaca	
21% cotton, 16% polyester	
18510	Dune
18511	Trench
18512	Vicuna
18570	Sepia
18571	Umber
18580	Fog
18581	Flannel
18582	Charcoal

Campana – Maharam	
Ancillary/Seating	
59” wide	
85% wool	
15% nylon	
ZC001/466571-001	Viverine
ZC002/466571-002	Lithograph
ZC003/466571-003	Moonscape
ZC004/466571-004	Brevity
ZC005/466571-005	Linear
ZC006/466571-006	Hinterland
ZC007/466571-007	Mural
ZC008/466571-008	Sloe
ZC009/466571-009	Interstellar
ZC010/466571-010	Mythology
ZC011/466571-011	Scintillate
ZC012/466571-012	Succession
ZC013/466571-013	Visceral
ZC014/466571-014	Hemisphere
ZC015/466571-015	Troposhpere
ZC016/466571-016	Skye
ZC017/466571-017	Seaward
ZC018/466571-018	Nemorous
ZC019/466571-019	Allegory
ZC020/466571-020	Olivine
ZC021/466571-021	Reptilian
ZC022/466571-022	Basil
ZC023/466571-023	Fanleaf
ZC024/466571-024	Beachgrass
ZC025/466571-025	Hayfield

Campana *continued*	
ZC026/466571-026	Freesia
ZC027/466571-027	Rhodium
ZC028/466571-028	Undercoat
ZC029/466571-029	Airbrush
ZC030/466571-030	Shellfish
ZC031/466571-031	Mojave
ZC032/466571-032	Renaissance
ZC033/466571-033	Decoupage
ZC034/466571-034	Outback
ZC035/466571-035	Millipede

Gemma – Maharam	
Ancillary/Seating	
55” wide	
85% wool	
15% nylon	
ZGE01/466568-001	Crinoline
ZGE02/466568-002	Angelic
ZGE03/466568-003	Savory
ZGE04/466568-004	Honeycomb
ZGE05/466568-005	Gilded
ZGE06/466568-006	Paddleboat
ZGE07/466568-007	Stagecoach
ZGE08/466568-008	Waterbuck
ZGE09/466568-009	Earnest
ZGE10/466568-010	Auric
ZGE11/466568-011	Carmine
ZGE12/466568-012	Serape
ZGE13/466568-013	Ferric
ZGE14/466568-014	Canyon
ZGE15/466568-015	Alembic
ZGE16/466568-016	Patio
ZGE17/466568-017	Sorrel
ZGE18/466568-018	Root

Gemma *continued*	
ZGE19/466568-019	Mansion
ZGE20/466568-020	Buff
ZGE21/466568-021	Starch
ZGE22/466568-022	Dawn
ZGE23/466568-023	Countryside
ZGE24/466568-024	Dewy
ZGE25/466568-025	Reliquary
ZGE26/466568-026	Deluge
ZGE27/466568-027	Overlay
ZGE28/466568-028	Electron
ZGE29/466568-029	Sheath
ZGE30/466568-030	Quietude
ZGE31/466568-031	Jargon
ZGE32/466568-032	Powder
ZGE33/466568-033	Tide
ZGE34/466568-034	Outwash
ZGE35/466568-035	Enamored
ZGE36/466568-036	Smitten
ZGE37/466568-037	Revere
ZGE38/466568-038	Mangosteen
ZGE39/466568-039	Allium
ZGE40/466568-040	Immense
ZGE41/466568-041	Chamber
ZGE42/466568-042	Cosmos
ZGE43/466568-043	Inkling
ZGE44/466568-044	Rainwater
ZGE45/466568-045	Shade
ZGE46/466568-046	Pendant
ZGE47/466568-047	Axial
ZGE48/466568-048	Fervent
ZGE49/466568-049	Legacy
ZGE50/466568-050	Caliber
ZGE51/466568-051	Temple
ZGE52/466568-052	Evenfall

Jasper - Maharam	
Ancillary/Seating	
53” wide	
55% wool	
27% solution-dyed nylon	
18% cotton	
ZJA01/466563-001	Thrill
ZJA02/466563-002	Anise
ZJA03/466563-003	Grapefruit
ZJA04/466563-004	Lifeguard
ZJA05/466563-005	Heartfelt
ZJA06/466563-006	Corsage
ZJA07/466563-007	Earthenware
ZJA08/466563-008	Bear
ZJA09/466563-009	Firelight
ZJA10/466563-010	Dreamcatcher
ZJA11/466563-011	Bobcat
ZJA12/466563-012	Glacial
ZJA13/466563-013	Vaporize
ZJA14/466563-014	Trapdoor
ZJA15/466563-015	Halcyon
ZJA16/466563-016	Observatory
ZJA17/466563-017	Steamboat
ZJA18/466563-018	Aquathlon
ZJA19/466563-019	Cloudless
ZJA20/466563-020	Briny
ZJA21/466563-021	Magical
ZJA22/466563-022	Picnic
ZJA23/466563-023	Herbage
ZJA24/466563-024	Pasture
ZJA25/466563-025	Courtyard
ZJA26/466563-026	Leapfrog

Price category 9 continued on next page

- Maharam textiles are on assigned lead times A.
- Fabric numbers are listed as Herman Miller fabric number/Maharam fabric number.

Price Category 9
continued

Leather	
Ancillary/Seating	
approx. 50 sq. ft. per hide	
100% leather	
2101	Ivory
2109	Black *
2110	Smoke
2111	Graphite
2112	Khaki
2113	Rattan
2114	Truffle
2115	Alpine
2116	Haze
2117	Sable Grey
2118	Dark Mineral **
2119	Dark Carbon ***
2120	Cranberry
2121	Deep Sea

* Armpad color available on Aeron® Chair, Graphite.
** Armpad color available on Aeron Chair, Mineral.
*** Armpad color available on Aeron Chair, Carbon.

Price Category 10

Bristol Leather - Geiger Textile	
Ancillary	
approx. 55 sq. ft. per hide	
100% leather	
5-507	Black
5-511	Putty
5-519	Hunter
5-520	White
5-521	Ivory
5-522	Parchment
5-537	Caribbean
5-546	Pumice
5-547	Smoke
5-548	Charcoal
5-549	Dark Shale
5-556	Downtown Grey
5-557	City Night
5-559	Ash Grey
5-563	Champagne
5-564	Chestnut Brown
5-565	Dark Sienna
5-566	Earthen
5-567	Desert
5-568	British Green
5-579	Paris Blue
5-583	Atlantic
5-592	Camel
5-594	Taupe
5-597	Pure *
5-598	Cream
5-600	Midnight Blue
5-603	Sangria
5-604	Swiss Red
5-605	Nordic Yellow
5-606	Sky Grey
5-608	Natural

* Color not available on Saiba Chair.

Firma – Maharam	
Ancillary/Seating	
55” wide	
78% wool	
22% nylon	
3KH01/466582-001	Wrath
3KH02/466582-002	Pantomime
3KH03/466582-003	Shaded
3KH04/466582-004	Prologue
3KH05/466582-005	Framework
3KH06/466582-006	Railroad
3KH07/466582-007	Grommet
3KH08/466582-008	Lunisolar
3KH09/466582-009	Snowpack
3KH10/466582-010	Coldsnap
3KH11/466582-011	Sealift
3KH12/466582-012	Brood
3KH13/466582-013	Intertidal
3KH14/466582-014	Confide
3KH15/466582-015	Secluded
3KH16/466582-016	Leisure
3KH17/466582-017	Portfolio
3KH18/466582-018	Strato
3KH19/466582-019	Fogbow
3KH20/466582-020	Snowcone
3KH21/466582-021	Kazoo
3KH22/466582-022	Esteem
3KH23/466582-023	Mackerel
3KH24/466582-024	Brooch
3KH25/466582-025	Caesious
3KH26/466582-026	Islet
3KH27/466582-027	Biosphere
3KH28/466582-028	Hilltop
3KH29/466582-029	Arboreal
3KH30/466582-030	Lineage
3KH31/466582-031	Comfrey
3KH32/466582-032	Circe
3KH33/466582-033	Ecosystem
3KH34/466582-034	Knack
3KH35/466582-035	Watt
3KH36/466582-036	Epiphany
3KH37/466582-037	Gamma
3KH38/466582-038	Taxicab
3KH39/466582-039	Varietal
3KH40/466582-040	Tale

Firma *continued*	
3KH41/466582-041	Elemental
3KH42/466582-042	Cuff
3KH43/466582-043	Emu
3KH44/466582-044	Tempeh
3KH45/466582-045	Tephra
3KH46/466582-046	Shellac
3KH47/466582-047	Emporium
3KH48/466582-048	Keratin
3KH49/466582-049	Camwood
3KH50/466582-050	Gloam
3KH51/466582-051	Novela
3KH52/466582-052	Fruitpunch
3KH53/466582-053	Decant
3KH54/466582-054	Milkshake
3KH55/466582-055	Metaphysic
3KH56/466582-056	Carafe
3KH57/466582-057	Voyager
3KH58/466582-058	Tenebrous
3KH59/466582-059	Subtext
3KH60/466582-060	Silent

Gemma Multi – Maharam	
Ancillary/Seating	
55” wide	
85% wool	
15% nylon	
ZGF01/466569-001	Andromeda
ZGF02/466569-002	Dappled
ZGF03/466569-003	Lyra
ZGF04/466569-004	Flaunt
ZGF05/466569-005	Celluloid
ZGF06/466569-006	Hydrozoa
ZGF07/466569-007	Firefly
ZGF08/466569-008	Pisces
ZGF09/466569-009	Strath
ZGF10/466569-010	Erosion
ZGF11/466569-011	Cabaret
ZGF12/466569-012	Candytuft
ZGF13/466569-013	Juice
ZGF14/466569-014	Fairground
ZGF15/466569-015	Copperplate
ZGF16/466569-016	Sunbird
ZGF17/466569-017	Cinematic
ZGF18/466569-018	Clairvoyant

Price category 10 continued on next page

- Maharam textiles are on assigned lead times A.
- Fabric numbers are listed as Herman Miller fabric number/Maharam fabric number.

Price Category 10
continued

Gemma Multi *continued*	
ZGF19/466569-019	Crocus
ZGF20/466569-020	Memoir
ZGF21/466569-021	Roulette
ZGF22/466569-022	Voltaic
ZGF23/466569-023	Compote
ZGF24/466569-024	Lambent
ZGF25/466569-025	Twister
ZGF26/466569-026	Chronicle
ZGF27/466569-027	Sidereal
ZGF28/466569-028	Tanzanite
ZGF29/466569-029	Crystalize
ZGF30/466569-030	Chromium
ZGF31/466569-031	Pallium
ZGF32/466569-032	Spectre
ZGF33/466569-033	Courgette
ZGF34/466569-034	Viper
ZGF35/466569-035	Sunlit
ZGF36/466569-036	Heavenly
ZGF37/466569-037	Vernal
ZGF38/466569-038	Cress
ZGF39/466569-039	Limn
ZGF40/466569-040	Horseradish
ZGF41/466569-041	Shandy
ZGF42/466569-042	Granary
ZGF43/466569-043	Percolate
ZGF44/466569-044	Motor
ZGF45/466569-045	Unicorn
ZGF46/466569-046	Lobster
ZGF47/466569-047	Rhododendron
ZGF48/466569-048	Taffy
ZGF49/466569-049	Rishi
ZGF50/466569-050	Backcountry
ZGF51/466569-051	Buckthorn
ZGF52/466569-052	Coniferous
ZGF53/466569-053	Delphic
ZGF54/466569-054	Hieroglyph
ZGF55/466569-055	Eiderdown
ZGF56/466569-056	Sandbar
ZGF57/466569-057	Tanager

Gemma Multi Reverse – Maharam	
Ancillary/Seating	
55” wide	
85% wool	
15% nylon	
ZGF58/466569-101	Andromeda Reverse
ZGF59/466569-102	Dappled Reverse
ZGF60/466569-103	Lyra Reverse
ZGF61/466569-104	Flaunt Reverse
ZGF62/466569-105	Celluloid Reverse
ZGF63/466569-106	Hydrozoa Reverse
ZGF64/466569-107	Firefly Reverse
ZGF65/466569-108	Pisces Reverse
ZGF66/466569-109	Strath Reverse
ZGF67/466569-110	Erosion Reverse
ZGF68/466569-111	Cabaret Reverse
ZGF69/466569-112	Candytuft Reverse
ZGF70/466569-113	Juice Reverse
ZGF71/466569-114	Fairground Reverse
ZGF72/466569-115	Copperplate Reverse
ZGF73/466569-116	Sunbird Reverse
ZGF74/466569-117	Cinematic Reverse
ZGF75/466569-118	Clairvoyant Reverse
ZGF76/466569-119	Crocus Reverse
ZGF77/466569-120	Memoir Reverse

Gemma Multi Reverse *continued*	
ZGF78/466569-121	Roulette Reverse
ZGF79/466569-122	Voltaic Reverse
ZGF80/466569-123	Compote Reverse
ZGF81/466569-124	Lambent Reverse
ZGF82/466569-125	Twister Reverse
ZGF83/466569-126	Chronicle Reverse
ZGF84/466569-127	Sidereal Reverse
ZGF85/466569-128	Tanzanite Reverse
ZGF86/466569-129	Crystalize Reverse
ZGF87/466569-130	Chromium Reverse
ZGF88/466569-131	Pallium Reverse
ZGF89/466569-132	Spectre Reverse
ZGF90/466569-133	Courgette Reverse
ZGF91/466569-134	Viper Reverse
ZGF92/466569-135	Sunlit Reverse
ZGF93/466569-136	Heavenly Reverse
ZGF94/466569-137	Vernal Reverse
ZGF95/466569-138	Cress Reverse
ZGF96/466569-139	Limn Reverse
ZGF97/466569-140	Horseradish Reverse
ZGF98/466569-141	Shandy Reverse
ZGF99/466569-142	Granary Reverse

Gemma Multi Reverse *continued*	
ZGFA0/466569-143	Percolate Reverse
ZGFA1/466569-144	Motor Reverse
ZGFA2/466569-145	Unicorn Reverse
ZGFA3/466569-146	Lobster Reverse
ZGFA4/466569-147	Rhododendron Reverse
ZGFA5/466569-148	Taffy Reverse
ZGFA6/466569-149	Rishi Reverse
ZGFA7/466569-150	Backcountry Reverse
ZGFA8/466569-151	Buckthorn Reverse
ZGFA9/466569-152	Coniferous Reverse
ZGFB0/466569-153	Delphic Reverse
ZGFB1/466569-154	Hieroglyph Reverse
ZGFB2/466569-155	Eiderdown Reverse
ZGFB3/466569-157	Tanager Reverse

Petra - Maharam	
Ancillary/Seating	
55” wide	
70% wool	
19% linen	
11% nylon	
ZP401/466580-001	Hieroglyph
ZP402/466580-002	Interior
ZP403/466580-003	Samovar
ZP404/466580-004	Calcite
ZP405/466580-005	Silversmith
ZP406/466580-006	Rivet
ZP407/466580-007	Carpolite
ZP408/466580-008	Bonbon

- Maharam textiles are on assigned lead times A.
- Fabric numbers are listed as Herman Miller fabric number/Maharam fabric number.

Price category 10 continued on next page

Price Category 10
continued

Petra *continued*	
ZP409/466580-009	Dreamy
ZP410/466580-010	Bejewel
ZP411/466580-011	Sashimi
ZP412/466580-012	Spirula
ZP413/466580-013	Chalet
ZP414/466580-014	Reindeer
ZP415/466580-015	Nostalgia
ZP416/466580-016	Trove
ZP417/466580-017	Narcissus
ZP418/466580-018	Yurt
ZP419/466580-019	Congee
ZP420/466580-020	Genepy
ZP421/466580-021	Herbaceous
ZP422/466580-022	Paddock
ZP423/466580-023	Precious
ZP424/466580-024	Biome
ZP425/466580-025	Tinted
ZP426/466580-026	Pelagic
ZP427/466580-027	Bluebill
ZP428/466580-028	Chicory
ZP429/466580-029	Eaglet
ZP430/466580-030	Permafrost
ZP431/466580-031	Atlantic
ZP432/466580-032	Airstream
ZP433/466580-033	Debonair

Superweave - Maharam	
Ancillary	
54” wide	
75% polyester	
25% cotton	
Z2203/466241-005	Sienna
Z2204/466241-002	Ochre
Z2207/466241-004	Marine
Z2208/466241-003	Olive
Z2220/466241-001	Orange and Pink

Price Category 11

Prone Leather - Maharam	
Ancillary	
approx. 50 sq. ft. per hide	
100% leather	
protective top coat	
1NX01/700020-001	Lotus
1NX02/700020-002	Timbre
1NX03/700020-003	Essence
1NX04/700020-004	Script
1NX05/700020-005	Gambit
1NX06/700020-006	Obsidian
1NX07/700020-007	Sail
1NX09/700020-009	Vine
1NX10/700020-010	Yarrow
1NX13/700020-013	Balsa
1NX14/700020-014	Shore
1NX15/700020-015	Bricolage
1NX17/700020-017	Ledge
1NX19/700020-019	Mantra
1NX20/700020-020	Java
1NX21/700020-021	Lute
1NX22/700020-022	Glow
1NX23/700020-023	Hickory

Tenera Leather - Geiger Textile	
Ancillary	
approx. 55 sq. ft. per hide	
100% leather	
17501	Cement
17502	Marzipan
17503	Sunglow
17504	Raw Sienna
17505	Maple
17506	Poppy
17507	Salsa
17508	Cranberry
17509	Burnt Sienna
17510	Dark Chocolate
17511	Black
17512	Carbon
17513	Sapphire

Price Category 12-13

No fabrics available at this time.

Price Category 14

Lanalux - Maharam	
Ancillary	
54” wide	
100% wool	
Z1375/466240-005	Black/White
Z1378/466240-006	Olive/Black
Z1380/466240-001	Natural
Z1383/466240-002	Umber
Z1384/466240-007	Natural/Black
Z1386/466240-003	Orange
Z1387/466240-004	Crimson

- Maharam textiles are on assigned lead times A.
- Fabric numbers are listed as Herman Miller fabric number/Maharam fabric number.

Price Category A

No fabrics available at this time.

Price Category B

Medium – Maharam	
Ancillary/Seating/Workspaces	
54” wide	
100% polyester	
VM01/463490-001	Raven
VM02/463490-002	Smoke
VM03/463490-003	Alloy
VM04/463490-004	Flax
VM07/463490-007	Espresso
VM14/463490-014	Laser
VM16/463490-016	Port
VM22/463490-022	Marina
VM29/463490-029	Pistachio
VM32/463490-032	Prospect
VM36/463490-036	Delight
VM39/463490-039	Nautical
VM40/463490-040	Pool
VM44/463490-044	Washed
VM45/463490-045	Sculpture
VM46/463490-046	Thatched
VM47/463490-047	Hike
VM48/463490-048	Tangle
VM49/463490-049	Pacific
VM50/463490-050	Cosmic
VM51/463490-051	Cascade
VM52/463490-052	Blackberry
VM53/463490-053	Nasturtium

Messenger – Maharam	
Ancillary/Seating/Workspaces	
54” wide	
78% post-industrial recycled polyester	
15% polyester, 7% nylon	
TI07/458640-007	Shadow
TI08/458640-008	Bayou *
TI24/458640-024	Poppy
TI25/458640-025	Mao
TI29/458640-029	Onyx *
TI31/458640-031	Cloud *
TI38/458640-038	Depth *
TI40/458640-040	Nile *
TI41/458640-041	Azure *
TI45/458640-045	Cactus *
TI46/458640-046	Ice * **
TI48/458640-048	Neon
TI50/458640-050	Hydrangea
TI53/458640-053	Tangelo
TI54/458640-054	Lumine *
TI58/458640-058	Snow ** ***
TI60/458640-060	Peridot
TI61/458640-061	Capri *
TI62/458640-062	Ultramarine
TI63/458640-063	Squall
TI66/458640-066	Cassis
TI67/458640-067	Aster

Messenger *continued*	
TI69/458640-069	Cherry
TI70/458640-070	Vibrant
TI71/458640-071	Satsuma *
TI72/458640-072	Maize
TI76/458640-076	Fossil
TI77/458640-077	Ash
TI78/458640-078	Tusk
TI79/458640-079	Oyster **
TI81/458640-081	Husk
TI84/458640-084	Robust
TI85/458640-085	Beyond
TI86/458640-086	Voyage *
TI87/458640-087	Everglade
TI89/458640-089	Blanch ***
TI90/458640-090	Longspur
TI91/458640-091	Vireo
TI92/458640-092	Dipper
TI93/458640-093	Gale
TI94/458640-094	Hunter
TI95/458640-095	Lime
TI96/458640-096	Apple
TI97/458640-097	Krill
TI98/458640-098	Catalyst

* Colors available on 20-day lead time.
** Colors not available on Eames Molded Fiberglass and Molded Plastic Side Chairs.
*** Colors not available on Valor Seating.

- Maharam textiles are on assigned lead times A.
- Fabric numbers are listed as Herman Miller fabric number/Maharam fabric number.

Price Category C

Manner - Maharam	
Ancillary/Seating/Workspaces	
54” wide	
65% post-industrial	
recycled polyester	
35% post-consumer	
recycled polyester	
Z2701/466177-001	Magic
Z2702/466177-002	Carob
Z2703/466177-003	Porpoise
Z2704/466177-004	Flint
Z2705/466177-005	Hush *
Z2706/466177-006	Nuance
Z2711/466177-011	Ember
Z2712/466177-012	Wagon
Z2713/466177-013	Ablaze
Z2714/466177-014	Peel
Z2716/466177-016	Butterscotch
Z2717/466177-017	Harvest
Z2720/466177-020	Parakeet
Z2722/466177-022	Aquatic
Z2723/466177-023	Cottage
Z2724/466177-024	Dahlia
Z2725/466177-025	Vivid
Z2726/466177-026	Basin
Z2727/466177-027	Schooner
Z2728/466177-028	Slope
Z2729/466177-029	Silverpoint
Z2730/466177-030	Lattice
Z2731/466177-031	Smoky
Z2732/466177-032	Magnetic
Z2733/466177-033	Woad
Z2734/466177-034	Resolute
Z2735/466177-035	Cruise
Z2736/466177-036	Atmospheric
Z2737/466177-037	Cloudburst
Z2738/466177-038	Tidewater
Z2739/466177-039	Firth
Z2740/466177-040	Oceanside
Z2741/466177-041	Grandeur
Z2742/466177-042	Comfort
Z2743/466177-043	Dill
Z2744/466177-044	Poplar
Z2745/466177-045	Citronella
Z2746/466177-046	Passerine

Manner *continued*	
Z2747/466177-047	Southwest
Z2748/466177-048	Roseate
Z2749/466177-049	Charisma
Z2750/466177-050	Siltstone
Z2751/466177-051	Kimono
Z2752/466177-052	Valiant
Z2753/466177-053	Baroness

* Color not available on Eames Aluminum Group, Executive Chairs, Upholstered Molded Plywood Chairs, and Sofa Compact.

Merit - Maharam	
Ancillary/Seating	
54” wide	
76% post-industrial	
recycled polyester	
24% polyester	
PFOA-Free stain resistant	
88Z01/466444-001	Trickle
88Z02/466444-002	Beluga
88Z03/466444-003	Gunmetal
88Z04/466444-004	Blackout
88Z05/466444-005	Superior
88Z06/466444-006	Ocean
88Z07/466444-007	Highborn
88Z08/466444-008	Immersed
88Z09/466444-009	Rainfall
88Z10/466444-010	Blizzard
88Z11/466444-011	Poolside
88Z12/466444-012	Steel
88Z13/466444-013	Zircon
88Z14/466444-014	Ripple
88Z15/466444-015	Aegean
88Z16/466444-016	Armada
88Z17/466444-017	Hedera
88Z18/466444-018	Rainforest
88Z19/466444-019	Gator
88Z20/466444-020	Vineyard
88Z21/466444-021	Pine
88Z22/466444-022	Kiwi
88Z23/466444-023	Kookaburra

Merit *continued*	
88Z24/466444-024	Bellini
88Z25/466444-025	Sunflower
88Z26/466444-026	Sandstorm
88Z27/466444-027	Mudder
88Z28/466444-028	Lynx
88Z29/466444-029	Farro
88Z30/466444-030	Manila
88Z31/466444-031	Starfish
88Z32/466444-032	Brass
88Z33/466444-033	Arrow
88Z34/466444-034	Gelato
88Z35/466444-035	Nectarine
88Z36/466444-036	Macaron
88Z37/466444-037	Alert
88Z38/466444-038	Goji
88Z39/466444-039	Cabernet
88Z40/466444-040	Eggplant
88Z41/466444-041	Hawk
88Z42/466444-042	Stag
88Z43/466444-043	Overcast

Metric – Maharam	
Ancillary/Seating/Workspaces	
54” wide	
51% post-industrial	
recycled polyester	
49% polyester	
Z302/466014-002	Fog
Z303/466014-003	Fleece
Z312/466014-012	Cardinal
Z313/466014-013	Lava
Z318/466014-018	Pollen
Z320/466014-020	Alligator
Z323/466014-023	Tar
Z324/466014-024	Anchor
Z326/466014-026	Admiral
Z327/466014-027	Seaport
Z328/466014-028	Scuba
Z329/466014-029	Skate
Z330/466014-030	Hopscotch
Z331/466014-031	Film
Z332/466014-032	Whale
Z333/466014-033	Downpour
Z334/466014-034	Midday

Metric *continued*	
Z335/466014-035	Talisman
Z336/466014-036	Hedgerow
Z337/466014-037	Snorkel
Z338/466014-038	Highway
Z339/466014-039	Canary
Z340/466014-040	Sunny
Z341/466014-041	Aztec
Z342/466014-042	Fruit
Z343/466014-043	Galah
Z344/466014-044	Kiln
Z345/466014-045	Moth

Murmur - Maharam	
Ancillary/Seating	
55” wide	
100% polyester	
PFOA-Free stain resistant	
8EY01/466446-001	Gust
8EY02/466446-002	Harmonica
8EY03/466446-003	Canopy
8EY04/466446-004	Dim
8EY05/466446-005	Peppercorn
8EY06/466446-006	Cauldron
8EY07/466446-007	Conquer
8EY08/466446-008	Rapids
8EY09/466446-009	Seawater
8EY10/466446-010	Baby
8EY11/466446-011	Elderberry
8EY12/466446-012	Iceberg
8EY13/466446-013	Tallgrass
8EY14/466446-014	Underground
8EY15/466446-015	Biome
8EY16/466446-016	Cask
8EY17/466446-017	Argan
8EY18/466446-018	Sundown
8EY19/466446-019	Ignite
8EY20/466446-020	Sultry
8EY21/466446-021	Sangria

- Maharam textiles are on assigned lead times A.
- Fabric numbers are listed as Herman Miller fabric number/Maharam fabric number.

Price Category D

Bluff - Maharam	
Ancillary/Seating	
54” wide	
100% polyurethane	
Ink-resistant protective top coat	
Polyester backing	
8I801/466489-001	Loom
8I802/466489-002	Helm
8I803/466489-003	Cruller
8I804/466489-004	Folklore
8I805/466489-005	Beguile
8I806/466489-006	Sherpa
8I807/466489-007	Teleport
8I808/466489-008	Annex
8I809/466489-009	Lorimer
8I810/466489-010	Cinema
8I811/466489-011	Zip
8I812/466489-012	Coach
8I813/466489-013	Supernova
8I814/466489-014	Pirate
8I815/466489-015	Academy
8I816/466489-016	Disco
8I817/466489-017	Equator
8I818/466489-018	Brink
8I819/466489-019	Scene
8I820/466489-020	Petrichor
8I821/466489-021	Exotic
8I822/466489-022	Fauna
8I823/466489-023	Calabash
8I824/466489-024	Fuscous
8I825/466489-025	Wildling
8I826/466489-026	Blitz
8I827/466489-027	Allspice
8I828/466489-028	Lumos
8I829/466489-029	Pilot
8I830/466489-030	Jukebox
8I831/466489-031	Dugout
8I832/466489-032	Claret
8I833/466489-033	Flamenco

Mode – Maharam	
Ancillary/Seating/Workspaces	
54” wide	
80% post-consumer recycled polyester	
20% polyester	
PFOA-Free stain resistant finish	
ZMD01/466337-001	Stroll
ZMD02/466337-002	Intaglio
ZMD03/466337-003	Ominous
ZMD04/466337-004	Machine
ZMD05/466337-005	Talus
ZMD06/466337-006	Marsh
ZMD07/466337-007	Hollow
ZMD08/466337-008	Sycamore
ZMD09/466337-009	Clavicle
ZMD10/466337-010	Billygoat
ZMD11/466337-011	Spindle
ZMD12/466337-012	Lemon
ZMD13/466337-013	Oxeye
ZMD14/466337-014	Henge
ZMD15/466337-015	Goldenrod
ZMD16/466337-016	Cottontail
ZMD17/466337-017	Lioness
ZMD18/466337-018	Oriole
ZMD19/466337-019	Rust
ZMD20/466337-020	Carotene
ZMD21/466337-021	Blush
ZMD22/466337-022	Vermilion
ZMD23/466337-023	Alder
ZMD24/466337-024	Kermes
ZMD25/466337-025	Barberry
ZMD26/466337-026	Petal
ZMD27/466337-027	Valley
ZMD28/466337-028	Odyssey
ZMD29/466337-029	Ballpoint
ZMD30/466337-030	Toile
ZMD31/466337-031	Paradise

Mode *continued*	
ZMD32/466337-032	Angelfish
ZMD33/466337-033	Denim
ZMD34/466337-034	Crush
ZMD35/466337-035	Jetty
ZMD36/466337-036	Saltwater
ZMD37/466337-037	Mallard
ZMD38/466337-038	Celtic
ZMD39/466337-039	Eucalyptus
ZMD40/466337-040	Bonsai
ZMD41/466337-041	Sassafras
ZMD42/466337-042	Yucca
ZMD43/466337-043	Lichen

Spiral - Maharam	
Workspaces	
66” wide	
100% polyester	
ZS301/901882-001	Chalk
ZS303/901882-003	Wheat
ZS304/901882-004	Mica
ZS305/901882-005	Pavement
ZS306/901882-006	Graphite

Price Category E

Article – Maharam	
Ancillary/Seating	
54” wide	
100% vinyl	
ZAT08/458600-008	Marina
ZAT13/458600-013	Flume
ZAT14/458600-014	Storm
ZAT15/458600-015	Toast
ZAT19/458600-019	Fleece
ZAT22/458600-022	Stone
ZAT26/458600-026	Mercury
ZAT29/458600-029	Bluegrass
ZAT31/458600-031	Truffle
ZAT32/458600-032	Gravel
ZAT33/458600-033	Value
ZAT34/458600-034	Tint
ZAT35/458600-035	Snowflake
ZAT36/458600-036	Chalice
ZAT37/458600-037	Trail
ZAT38/458600-038	Pyramid
ZAT39/458600-039	Desert
ZAT40/458600-040	Lei
ZAT41/458600-041	Rouge
ZAT42/458600-042	Karma
ZAT43/458600-043	Opal
ZAT44/458600-044	Periwinkle
ZAT45/458600-045	Vampire
ZAT46/458600-046	Surf
ZAT47/458600-047	Plumage

Price category E continued on next page

- Maharam textiles are on assigned lead times A.
- Fabric numbers are listed as Herman Miller fabric number/Maharam fabric number.

Price Category E
continued

Flock - Maharam	
Workspaces	
63” wide	
100% polyester	
ZF301/901892-001	Calm
ZF302/901892-002	Course
ZF303/901892-003	Highlight
ZF305/901892-005	Poppy
ZF306/901892-006	Briefcase
ZF307/901892-007	Monkstrap
ZF308/901892-008	Quag
ZF309/901892-009	Pistachio
ZF310/901892-010	Froth
ZF311/901892-011	Celadon
ZF312/901892-012	Highsea
ZF313/901892-013	China
ZF314/901892-014	Victorian
ZF315/901892-015	Commander
ZF316/901892-016	Raven
ZF317/901892-017	Aluminum

Micro – Maharam	
Ancillary	
54” wide	
100% vinyl	
ZMB01/466099-001	Muslin
ZMB04/466099-004	Basalt
ZMB06/466099-006	Phantom
ZMB07/466099-007	Depth
ZMB08/466099-008	Cottage
ZMB09/466099-009	Hunter
ZMB11/466099-011	Tomatillo
ZMB12/466099-012	Brew
ZMB14/466099-014	Tang
ZMB15/466099-015	Risk

Parallel — Maharam	
Workspaces	
66” wide	
100% recycled polyester	
TT03/901180-003	Fog
TT22/901180-022	Sterling
TT23/901180-023	Linen
TT24/901180-024	Pea
TT27/901180-027	Boulder
TT28/901180-028	Stream
TT29/901180-029	Shiitake
TT32/901180-032	Brandy
TT33/901180-033	Crater
TT36/901180-036	Quail

Price Category F

Apt – Maharam	
Ancillary/Seating	
54” wide	
100% polyurethane/silicone	
Ink-resistant protective top coat	
Polyester backing	
82T12/466392-012	Iris
82T13/466392-013	Nocturnal
82T14/466392-014	Fluid
82T15/466392-015	Eden
82T16/466392-016	Galactic
82T17/466392-017	Shoreline
82T18/466392-018	Jade
82T19/466392-019	Garden
82T20/466392-020	Botanic
82T21/466392-021	Chartreuse
82T23/466392-023	Lyric
82T24/466392-024	Turmeric
82T25/466392-025	Bengal
82T26/466392-026	Core
82T27/466392-027	Mantle
82T28/466392-028	Sorbet
82T32/466392-032	Oak
82T33/466392-033	Castle
82T34/466392-034	Follow
82T35/466392-035	Elixir
82T36/466392-036	Charm
82T37/466392-037	Descend
82T38/466392-009	Sketch
82T39/466392-010	Glacier
82T40/466392-031	Fortress
82T41/466392-030	Lotus
82T42/466392-001	Coconut
82T43/466392-011	Cobblestone
82T44/466392-029	Bloom
82T45/466392-022	Crepe
82T46/466392-006	Hickory
82T47/466392-007	Constellation
82T48/466392-008	Labyrinth
82T49/466392-002	Vibe
82T50/466392-003	Stampede
82T51/466392-004	Lumber
82T52/466392-005	Gingerbread

Brindle - Maharam	
Ancillary/Seating	
58” wide	
100% polyester	
PFOA-free stain resistant	
Acrylic backing	
87101/466418-001	Calico
87102/466418-002	Mauve
87103/466418-003	Torch
87104/466418-004	Burnt
87105/466418-005	Barn
87106/466418-006	Pharaoh
87107/466418-007	Sandbur
87108/466418-008	Jungle
87109/466418-009	Inland
87110/466418-009	Seagrass
87111/466418-009	Watercolor
87112/466418-009	Aquarium
87113/466418-009	Drill

Chime - Maharam	
Ancillary	
54” wide	
100% vinyl	
V9M3/465350-003	Morel
V9MB/465350-011	Tranquil
V9MJ/465350-020	Slate
V9MV/465350-031	Verve
V9MW/465350-032	Understory

Price category F continued on next page

- Maharam textiles are on assigned lead times A.
- Fabric numbers are listed as Herman Miller fabric number/Maharam fabric number.

Price Category F
continued

Conduit - Maharam
Ancillary/Seating
58” wide
100% polyester
PFOA-free stain resistant
Acrylic backing

87Z01/466428-001	Space
87Z02/466428-002	Syrup
87Z03/466428-003	Nimbus
87Z04/466428-004	Greystone
87Z05/466428-005	Fawn
87Z06/466428-006	Ghost
87Z07/466428-007	Caribbean
87Z08/466428-008	Canal
87Z09/466428-009	Bonfire

Emit – Maharam
Workspaces
54” wide
55% post-industrial recycled polyester
45% post-consumer recycled polyester
PFOA-free stain resistant

8EX01/466378-001	Wed
8EX02/466378-002	Zebra
8EX03/466378-003	Chiffon
8EX05/466378-005	Nectar
8EX06/466378-006	Elk
8EX08/466378-008	Goldenrod
8EX09/466378-009	Beached
8EX10/466378-010	Samba
8EX11/466378-011	Nest
8EX14/466378-014	Groove
8EX17/466378-017	Haiku
8EX18/466378-018	Bluefin
8EX19/466378-019	Flow
8EX20/466378-020	Xenon
8EX21/466378-021	Artem
8EX22/466378-022	Zen
8EX25/466378-025	Limeade

Instill – Maharam
Ancillary/Seating
54” wide
100% polyurethane
Ink-resistant protective top coat
Polyester backing

74M01/466351-001	Page
74M02/466351-002	Limestone
74M03/466351-003	Bobwhite
74M04/466351-004	Loafer
74M07/466351-007	Shaker
74M08/466351-008	Doe
74M09/466351-009	Ride
74M10/466351-010	Squire
74M11/466351-011	Tannin
74M12/466351-012	Vitis
74M14/466351-014	Quail
74M15/466351-015	Brittanic
74M16/466351-016	Narwhal
74M18/466351-018	Stowaway
74M19/466351-019	Koala
74M20/466351-020	Dorsal
74M21/466351-021	Stealth

Keen - Maharam
Ancillary/Seating
54” wide
61% polyester
39% polyolefin
PFOA-Free stain resistant
Acrylic backing

89N01/466433-001	Gaur
89N02/466433-002	Lock
89N03/466433-003	Elk
89N04/466433-004	Oatmeal
89N05/466433-005	Lakefront
89N06/466433-006	Argent
89N07/466433-007	Coyote
89N08/466433-008	Eventide
89N09/466433-009	Canal
89N10/466433-010	Rosemary
89N11/466433-011	Herb
89N12/466433-012	Ruby
89N13/466433-013	Loganberry

Ledger – Maharam
Ancillary/Seating
54” wide
100% polyurethane

V9G1/463770-001	001
V9G2/463770-002	002
V9G3/463770-003	003
V9G4/463770-004	004
V9GG/463770-017	017
V9GQ/463770-025	025
V9GS/463770-026	026
V9GU/463770-028	028
V9GV/463770-029	029
V9GW/463770-030	030
V9GX/463770-031	031
V9GY/463770-032	032
V9G18/463770-042	042
V9G19/463770-043	043
V9G20/463770-044	044
V9G21/463770-045	045
V9G22/463770-046	046

Loop - Maharam
Ancillary/Seating
57” wide
48% post-industrial recycled polyester
26% polyester
26% post-consumer recycled polyester
PFOA-Free stain resistant
Acrylic Backing

ZLL01/466469-001	Opossum
ZLL02/466469-002	Foundation
ZLL03/466469-003	Naval
ZLL04/466469-004	Buoyant
ZLL05/466469-005	Mockingbird
ZLL06/466469-006	Dynasty
ZLL07/466469-007	Zori
ZLL08/466469-008	Wildfire
ZLL09/466469-009	Floral
ZLL10/466469-010	Penguin

Multiply - Maharam
Ancillary/Seating
58” wide
57% post-consumer recycled polyester
43% post-industrial recycled polyester
PFOA-Free stain resistant
Acrylic Backing

82A01/466341-001	Winter
82A02/466341-002	Encore
82A03/466341-003	Swing
82A04/466341-004	Contrast
82A05/466341-005	Sterling
82A06/466341-006	Daze
82A07/466341-007	Sway
82A08/466341-008	Sailor
82A09/466341-009	Mystique
82A10/466341-010	Deep
82A11/466341-011	Craft
82A12/466341-012	Town
82A13/466341-013	Limit
82A14/466341-014	Tamale

Pitch - Maharam
Ancillary
54” wide
100% vinyl

ZPC04/466186-004	Pollen
ZPC07/466186-007	Apple
ZPC11/466186-011	Voyage
ZPC12/466186-012	Turquoise
ZPC14/466186-014	Inlet
ZPC15/466186-015	Captain
ZPC16/466186-016	Aura
ZPC17/466186-017	Coastal
ZPC18/466186-018	Fog
ZPC19/466186-019	Coal
ZPC21/466186-021	Mulberry
ZPC24/466186-024	Flame
ZPC26/466186-026	Tumbleweed
ZPC29/466186-029	Subtle
ZPC30/466186-030	Buff

Price category F continued on next page

- Maharam textiles are on assigned lead times A.
- Fabric numbers are listed as Herman Miller fabric number/Maharam fabric number.

Price Category F
continued

Pepper - Maharam
Ancillary/Seating
58” wide
49% polyester
41% post-industrial recycled polyester
10% post-consumer recycled polyester
PFOA-Free stain resistant
Acrylic Backing

8LW01/466486-001	Dojo
8LW02/466486-002	Marengo
8LW03/466486-003	Harlequin
8LW04/466486-004	Pavlova
8LW06/466486-006	Achiote
8LW07/466486-007	Essence
8LW08/466486-008	Genome
8LW09/466486-009	Myriad
8LW10/466486-010	Terrarium

Scuba - Maharam
Ancillary
54” wide
100% polyurethane

V9B1/464930-001	Vanilla
V9B5/464930-005	Chinchilla
V9B6/464930-006	Mahogany
V9B7/464930-007	Jet
V9B8/464930-008	Charcoal
V9B9/464930-009	Dolphin
V9BA/464930-010	Drizzle
V9BC/464930-012	Conifer
V9BD/464930-013	Bottle
V9BF/464930-015	Tourmaline
V9BG/464930-016	Sapphire
V9BH/464930-017	Electric
V9BL/464930-020	Cabernet
V9BM/464930-021	Brick
V9BN/464930-022	Coral
V9BP/464930-023	Autumn

Strum - Maharam
Ancillary/Seating
54” wide
100% polyurethane with silane-based antimicrobial

Z3301/466122-001	Overcast
Z3302/466122-002	Ridge
Z3304/466122-004	Pigeon
Z3307/466122-007	Bur
Z3308/466122-008	Abalone
Z3312/466122-012	Lemongrass

Price Category G

Compound - Maharam
Ancillary/Seating
54” wide
100% polyurethane with silane-based antimicrobial

ZC201/466196-001	Quartz
ZC203/466196-003	Weathered
ZC204/466196-004	Cliff
ZC205/466196-005	Espresso
ZC206/466196-006	Smolder
ZC207/466196-007	Blaze
ZC208/466196-008	Mandarin
ZC209/466196-009	Maple
ZC210/466196-010	Perennial
ZC211/466196-011	Mountainside
ZC212/466196-012	Tundra
ZC213/466196-013	Manatee
ZC214/466196-014	Marine
ZC215/466196-015	Twilight
ZC216/466196-016	Shelter
ZC217/466196-017	Vessel
ZC218/466196-018	Smoke
ZC219/466196-019	Fog

Fluent Crypton - Maharam
Ancillary
54” wide
52% polyester
31% post-industrial recycled polyester
17% post-consumer recycled polyester

ZFC01/466073-001	Lynx
ZFC12/466073-012	Bayou
ZFC13/466073-013	Bottle
ZFC14/466073-014	Cadet
ZFC22/466073-022	Turf
ZFC24/466073-024	Steady

Fold - Maharam
Seating
54” wide
100% polyurethane
Polyester backing

ZF101/466292-001	Jet
ZF102/466292-002	Chalk
ZF103/466292-003	Smoke
ZF105/466292-005	Fatigue
ZF106/466292-006	Splash
ZF107/466292-007	Apple
ZF108/466292-008	Moss
ZF110/466292-010	Midnight

Gild - Maharam
Ancillary/Seating
54” wide
100% non-phthalate vinyl
Ink-resistant protective top coat
Polyester backing

8AR01/466432-005	Grapevine
8AR02/466432-009	Frosting
8AR03/466432-007	Smokey
8AR04/466432-003	Skylight
8AR05/466432-011	Sandstone
8AR06/466432-004	Hurricane
8AR07/466432-002	Wreath
8AR08/466432-001	Rainforest
8AR09/466432-012	Fudge
8AR10/466432-010	Lantern
8AR11/466432-006	Planet
8AR12/466432-008	Reflection

Price category G continued on next page

- Maharam textiles are on assigned lead times A.
- Fabric numbers are listed as Herman Miller fabric number/Maharam fabric number.

Price Category G
continued

Pare – Maharam	
Ancillary/Seating	
54” wide	
52% wool	
26% polyester	
22% nylon	
PFOA-free stain resistant finish	
ZPR01/466359-001	Polaris
ZPR04/466359-004	Fresco
ZPR06/466359-006	Wink
ZPR07/466359-007	Concord
ZPR08/466359-008	Strawberry
ZPR09/466359-009	Solar
ZPR10/466359-010	Amulet
ZPR11/466359-011	Zest
ZPR12/466359-012	Elmwood
ZPR13/466359-013	Thyme
ZPR17/466359-017	Blueberry

Runner - Maharam	
Ancillary/Seating	
54” wide	
57% post-industrial recycled polyester	
43% post-consumer recycled polyester	
ZRF01/466108-001	Bluff
ZRF03/466108-003	Grove
ZRF04/466108-004	Starboard
ZRF05/466108-005	Plot
ZRF06/466108-006	Carousel

Sudden – Maharam	
Ancillary	
54” wide	
100% polyurethane	
ZSD02/463000-002	002
ZSD03/463000-003	003
ZSD05/463000-005	005
ZSD06/463000-006	006
ZSD07/463000-007	007
ZSD08/463000-008	008
ZSD09/463000-009	009
ZSD10/463000-010	010
ZSD11/463000-011	011
ZSD13/463000-013	013
ZSD15/463000-015	015
ZSD16/463000-016	016
ZSD17/463000-017	017
ZSD18/463000-018	018
ZSD19/463000-019	019
ZSD20/463000-020	020
ZSD24/463000-024	024
ZSD27/463000-027	027
ZSD36/463000-036	036

Price Category H

Anagram - Maharam	
Ancillary	
54” wide	
42% cotton	
32% polyester	
26% nylon	
ZAN01/466067-001	Quarry
ZAN02/466067-002	Hush
ZAN03/466067-003	Electric
ZAN04/466067-004	Range
ZAN05/466067-005	Settle

Circles — Maharam	
Ancillary/Seating	
55” wide	
70% cotton	
30% polyester	
ZT01/458310-001	Khaki
ZT02/458310-002	Fatigue
ZT03/458310-003	Document
ZT04/458310-004	Engine

Dot Pattern — Maharam	
Ancillary/Seating	
55” wide	
71% cotton	
29% polyester	
ZK01/458300-001	Document
ZK02/458300-002	Taupe
ZK04/458300-004	Red
ZK05/458300-005	Navy

Mechanism – Maharam	
Ancillary	
54” wide	
100% polyester	
ZMC01/465952-001	Mercury
ZMC10/465952-010	Pearl
ZMC11/465952-011	Bronze
ZMC13/465952-013	Titanium
ZMC15/465952-015	Tangerine
ZMC17/465952-017	Sprout

Mister – Maharam	
Ancillary	
54” wide	
67% solution-dyed acrylic	
33% solution-dyed polyester	
ZMG01/466178-001	Breeze
ZMG04/466178-004	Enliven
ZMG05/466178-005	Notice
ZMG06/466178-006	Azurite

Regatta – Maharam	
Ancillary	
54” wide	
65% solution-dyed acrylic	
35% solution-dyed polyester	
ZRT01/466189-001	Drift
ZRT02/466189-002	Parasol
ZRT04/466189-004	Swell

Small Dot Pattern — Maharam	
Ancillary/Seating	
55” wide	
71% cotton	
29% polyester	
ZL01/458320-001	Document
ZL02/458320-002	Sand
ZL03/458320-003	Khaki
ZL04/458320-004	Taupe
ZL05/458320-005	Charcoal
ZL06/458320-006	Document Reverse
ZL07/458320-007	Red
ZL08/458320-008	Yellow
ZL09/458320-009	Green

- Maharam textiles are on assigned lead times A.
- Fabric numbers are listed as Herman Miller fabric number/Maharam fabric number.

Price Category I

Colorwheel – Maharam	
Ancillary	
54” wide	
62% cotton	
38% solution-dyed	
post-industrial recycled nylon	
ZCW02/466163-002	Pumice
ZCW03/466163-003	Viridian
ZCW06/466163-006	Charcoal
ZCW07/466163-007	Carbon

Cursive – Maharam	
Ancillary/Seating	
54” wide	
67% solution-dyed acrylic	
33% solution-dyed polyester	
PFOA-Free stain resistant	
7CW01/466335-001	Fast
7CW03/466335-003	Beachcomb
7CW05/466335-005	Swift
7CW07/466335-007	Inkwell
7CW08/466335-008	Rubber

Passage - Maharam	
Ancillary	
54” wide	
100% polyester	
59P01/466614-001	Mirage
59P02/466614-002	Poolside
59P03/466614-003	Cascade
59P04/466614-004	Lacinato
59P05/466614-005	Overstory
59P06/466614-006	Celadon
59P07/466614-007	Echo
59P08/466614-008	Bentonite
59P09/466614-009	Buttercup
59P10/466614-010	Maple
59P11/466614-011	Blossom
59P12/466614-012	Cloudberry
59P13/466614-013	Contessa
59P14/466614-014	Claret
59P15/466614-015	Katana

Study - Maharam	
Ancillary/Seating	
54” wide	
73% solution-dyed acrylic	
27% solution-dyed polyester	
ZSY01/466269-001	001
ZSY02/466269-002	002
ZSY03/466269-003	003
ZSY04/466269-004	004
ZSY05/466269-005	005

Tracery – Maharam	
Ancillary	
52” wide	
34% solution-dyed nylon	
26% wool	
21% polyester	
19% cotton	
acrylic backing	
PFOA-free stain resistant finish	
ZT501/466372-001	Birch
ZT502/466372-002	Sterling
ZT503/466372-003	Flint
ZT504/466372-004	Indigo
ZT505/466372-005	Arctic
ZT506/466372-006	Kelp
ZT507/466372-007	Melon
ZT508/466372-008	Poppy
ZT509/466372-009	Copper
ZT510/466372-010	Papaya
ZT511/466372-011	Sepia

Price Category J

Fluted Silk – Maharam	
Ancillary	
54” wide	
85% silk	
8% cotton	
7% acrylic	
ZFK02/465982-002	Tarnish
ZFK05/465982-005	Calm
ZFK06/465982-006	Flaxen
ZFK10/465982-010	Noticed
ZFK11/465982-011	Moody
ZFK12/465982-012	Constant
ZFK13/465982-013	Seed
ZFK14/465982-014	Eternal
ZFK15/465982-015	Honor
ZFK17/465982-017	Cranach
ZFK20/465982-020	Discreet

Mikado – Maharam	
Ancillary	
54” wide	
79% cotton	
21% polyester	
V1901/459330-001	Umber
V1902/459330-002	Orange
V1903/459330-003	Ultramarine
V1904/459330-004	Pink
V1905/459330-005	Sepia

Trestle - Maharam	
Ancillary	
54” wide	
36% acrylic	
32% wool	
23% cotton	
9% polyester	
3WG01/466613-001	Loam
3WG02/466613-002	Rift
3WG03/466613-003	Fuse
3WG04/466613-004	Cumulus
3WG05/466613-005	Strand
3WG06/466613-006	Pomelo
3WG07/466613-007	Tawny
3WG08/466613-008	Sunstone
3WG09/466613-009	Kindling
3WG10/466613-010	Sidecar
3WG11/466613-011	Beak
3WG12/466613-012	Ficus
3WG13/466613-013	Hinge
3WG14/466613-014	Bluefish
3WG15/466613-015	Oblivion

- Maharam textiles are on assigned lead times A.
- Fabric numbers are listed as Herman Miller fabric number/Maharam fabric number.

Price Category K

Checker – Maharam

Ancillary
55” wide
77% cotton
23% polyester

V1201/459830-001	Emerald Light/ Ivory
V1204/459830-004	Ultramarine/ Emerald
V1206/459830-007	Sienna Dark/ Khaki
V1207/459830-008	Black/White
V1209/459830-009	Ultramarine/ Turquoise
V1210/459830-010	Blue Gray/ Emerald
V1211/459830-011	Olive/Pink
V1212/459830-012	Magenta/ Orange
V1213/459830-013	Crimson/ Orange

Checker Split – Maharam

Ancillary
55” wide
77% cotton
23% polyester

V1301/460290-01	Black/White

Double Triangles – Maharam

Ancillary
55” wide
77% cotton
23% polyester

V1401/459840-001	Black/White

Facets – Maharam

Ancillary
55” wide
77% cotton
23% polyester

V1501/459850-001	Black/White

Isa – Maharam

Ancillary
59” wide
85% wool
15% nylon

VKZ01/466624-001	Bashful
VKZ02/466624-002	Median
VKZ03/466624-003	Observe
VKZ04/466624-004	Plains
VKZ05/466624-005	Drawn
VKZ06/466624-006	Connect
VKZ07/466624-007	Fennel
VKZ08/466624-008	Skyward
VKZ09/466624-009	Oceanic
VKZ10/466624-010	Neptune
VKZ11/466624-011	Sprint
VKZ12/466624-012	Ledge
VKZ13/466624-013	Surround
VKZ14/466624-014	Foretell
VKZ15/466624-015	Lory
VKZ16/466624-016	Dear
VKZ17/466624-017	Foxtrot
VKZ18/466624-018	Sincere
VKZ19/466624-019	Begonia

Optik – Maharam

Ancillary
55” wide
76% cotton
24% polyester

ZQP01/459960-001	Sun Yellow/ Orange
ZQP06/459960-006	White/Black

Unisol – Maharam

Ancillary
55” wide
61% rayon
21% polyester
18% cotton

ZUN01/461160-001	Black/ White

Price Category L

Exaggerated Plaid – Maharam

Ancillary
59” wide
100% wool

ZEP01/466039-001	Glen
ZEP02/466039-002	Brae
ZEP03/466039-003	Firth

Geometri – Maharam

Ancillary
55” wide
77% cotton
23% polyester

ZGM02/459970-002	Red/ Carmine
ZGM03/459970-003	Lilac/Blue
ZGM04/459970-004	White/ Black

Jacobs Coat – Maharam

Ancillary
54” wide
92% wool
8% nylon

V1601/462270-001	Multicolored Bright *
V1602/462270-002	Multicolored Neutral

* Color available on Girard Color Wheel Ottoman.

Millerstripe – Maharam

Ancillary
54” wide
92% wool
8% rayon

V1701/462250-001	Multicolored Bright
V1702/462250-002	Multicolored Neutral

Minicheck - Maharam

Seating
55” wide
78% cotton
22% polyester
PFOA-Free stain resistant finish

ZMK01/466268-001	Black/ White

Monk’s Wool – Maharam

Ancillary
54” wide
96% wool
4% nylon

ZMW01/457301-001	Tusk
ZMW03/457301-003	Slate
ZMW05/457301-005	Cherokee

Pebble Wool – Maharam

Ancillary
54” wide
90% wool
10% nylon

ZPW01/457401-001	Birch
ZPW10/457401-010	Cottage
ZPW13/457401-013	Eggshell
ZPW14/457401-014	Whisper
ZPW15/457401-015	Ceramic
ZPW16/457401-016	Seamist
ZPW17/457401-017	Armory
ZPW18/457401-018	Glaze
ZPW19/457401-019	Cordial

Pebble Wool Multi – Maharam

Ancillary
54” wide
97% wool
3% nylon

ZPM01/461200-001	Fawn
ZPM02/461200-002	Slate
ZPM05/461200-005	Moss
ZPM06/461200-006	Tabasco

Price category L continued on next page

- Maharam textiles are on assigned lead times A.
- Fabric numbers are listed as Herman Miller fabric number/Maharam fabric number.

Price Category L
continued

Quatrefoil – Maharam	
Ancillary	
54” wide	
75% cotton	
25% nylon	
V2101/459350-001	Silver
V2102/459350-002	Pink
V2103/459350-003	Crimson
V2104/459350-004	Emerald
V2105/459350-005	Violet

Repeat Classic Stripe – Maharam	
Ancillary	
55” wide	
47% cotton	
27% rayon	
26% polyester	
ZRS01/462170-001	Inca
ZRS02/462170-002	Pistachio
ZRS03/462170-003	Poppy
ZRS04/462170-004	Cadet
ZRS05/462170-005	Peacock

Repeat Dot Ring – Maharam	
Ancillary	
55” wide	
75% cotton	
25% polyester	
ZRR01/462150-001	Gold
ZRR04/462150-004	Pink
ZRR05/462150-005	Coral
ZRR07/462150-007	Gold Reverse
ZRR10/462150-010	Pink Reverse
ZRR11/462150-011	Coral Reverse

Stripes - Maharam	
Ancillary	
56” wide	
92% wool	
8% nylon	
ZSP01/463980-001	001
ZSP02/463980-002	002
ZSP03/463980-003	003
ZSP04/463980-004	004
ZSP05/463980-005	005
ZSP06/463980-006	006
ZSP07/463980-007	007
ZSP08/463980-008	008
ZSP09/463980-009	009
ZSP10/463980-010	010

Toostripe – Maharam	
Ancillary	
54” wide	
92% wool	
8% nylon	
V2201/462260-001	Orange Dark/ Crimson Dark
V2202/462260-002	Black/ Raw Umber
V2203/462260-003	Ochre Dark/ Sienna

Price Category M

Fruit - Maharam	
Seating	
54” wide	
55% cotton	
32% nylon	
13% post-consumer recycled polyester	
PFOA-Free stain resistant finish	
Acrylic backing	
ZF201/466262-001	Opal
ZF202/466262-002	Lime
ZF203/466262-003	Olive
ZF204/466262-004	Sky
ZF207/466262-007	Russet

Names – Maharam	
Ancillary	
55” wide	
73% cotton	
27% polyester	
V1801/462510-001	Crimson On White
V1802/462510-002	Ultramarine On White
V1803/462510-003	Black On White

Ottoman Stripe – Maharam	
Ancillary	
58” wide	
92% wool	
8% nylon	
ZQN01/466142-001	Brass
ZQN02/466142-002	Cocoa
ZQN03/466142-003	Dusk
ZQN04/466142-004	Pistachio
ZQN05/466142-005	Apricot

Pressed Plaid – Maharam	
Ancillary	
54” wide	
100% wool	
T1101/466181-001	001
T1102/466181-002	002
T1103/466181-003	003
T1104/466181-004	004
T1105/466181-005	005
T1106/466181-006	006

Wool Striae – Maharam	
Ancillary	
54” wide	
100% wool	
T1201/466184-001	001
T1202/466184-002	002
T1203/466184-003	003
T1204/466184-004	004
T1205/466184-005	005
T1206/466184-006	006
T1207/466184-007	007

- Maharam textiles are on assigned lead times A.
- Fabric numbers are listed as Herman Miller fabric number/Maharam fabric number.

Price Category N

Alpaca Epinglé - Maharam

Ancillary
55” wide
100% alpaca

ZAE01/465902-001	Vellum
ZAE02/465902-002	Slate
ZAE06/465902-006	Graphite
ZAE07/465902-007	Beignet

Alpaca Velvet - Maharam

Ancillary
54” wide
100% alpaca

ZAV01/465901-001	Alpine
ZAV06/465901-006	Charcoal
ZAV07/465901-007	Pewter
ZAV08/465901-008	Squash
ZAV09/465901-009	Wallaby
ZAV10/465901-010	Brunia

Bespoke Stripe - Maharam

Ancillary
56” wide
100% wool

ZBP01/463540-001	Navy
ZBP02/463540-002	Tobacco
ZBP03/463540-003	Chocolate
ZBP04/463540-004	Charcoal
ZBP05/463540-005	Black
ZBP06/463540-006	Pewter

Herringbone Stripe - Maharam

Ancillary
57” wide
100% wool

ZKP01/465945-001	Granite
ZKP02/465945-002	Espresso
ZKP03/465945-003	Graphite
ZKP04/465945-004	Indigo
ZKP05/465945-005	Raven

Point – Maharam

Ancillary
53” wide
97% rayon
3% nylon

ZPT01/466090-001	Ivory and Ember
ZPT02/466090-002	Black and Coral
ZPT03/466090-003	Slate and Khaki
ZPT04/466090-004	Black and Cobalt
ZPT05/466090-005	Black and Khaki
ZPT06/466090-006	Slate and Mandarin
ZPT07/466090-007	Slate and Black
ZPT08/466090-008	Brick and Greige
ZPT09/466090-009	Gold and Black
ZPT10/466090-010	Greige and Peat
ZPT11/466090-011	Peat and Mandarin
ZPT12/466090-012	Crimson
ZPT13/466090-013	Mandarin
ZPT14/466090-014	Citrus
ZPT15/466090-015	Grass
ZPT16/466090-016	Cyan
ZPT17/466090-017	Cobalt

Wool Velvet - Maharam

Ancillary
54” wide
100% wool

ZWV01/466120-001	Plush
ZWV02/466120-002	Subdue
ZWV03/466120-003	Flagstone
ZWV04/466120-004	Nori
ZWV06/466120-006	Bridle
ZWV07/466120-007	Covert
ZWV08/466120-008	Gateway

Price Category O

Bavaria Stripe – Maharam

Ancillary
55” wide
77% polyester
23% cotton

ZBS02/466161-002	Unique

Price Category P

Big Stripe – Maharam

Ancillary
55” wide
92% wool
8% nylon

ZBR01/466174-001	Peacock
ZBR02/466174-002	Spring
ZBR03/466174-003	Umber
ZBR04/466174-004	Poppy
ZBR05/466174-005	Cobalt

Epinglé Stripe - Maharam

Ancillary
50” wide
100% cotton

ZES01/466007-001	Caramel
ZES02/466007-002	Lead
ZES03/466007-003	Violet
ZES04/466007-004	Mahogany
ZES05/466007-005	Olive

Layers Garden – Maharam

Ancillary
52” wide
96% wool
3% nylon
1% polyester

ZLY01/465916-001	Ivy/Bronze
ZLY02/465916-002	Putty/ Turquoise
ZLY03/465916-003	Pewter/ White
ZLY04/465916-004	Chocolate/ Lilac
ZLY05/465916-005	Peat/Copper

Price category P continued on next page

- Maharam textiles are on assigned lead times. A
- Fabric numbers are listed as Herman Miller fabric number/Maharam fabric number.

Price Category P
continued

Layers Park – Maharam
Ancillary
52” wide
95% wool
3% nylon
2% polyester

ZLP01/465918-001	Ash/Snow
ZLP02/465918-002	Mineral/Sky
ZLP03/465918-003	Poppy/ Melon
ZLP04/465918-004	Indigo/ White
ZLP05/465918-005	Earth/Cobalt

Layers Vineyard Large – Maharam
Ancillary
52” wide
95% wool
3% nylon
2% polyester

ZLV01/465921-001	Ivory/Onyx
ZLV02/465921-002	Slate/Azure
ZLV03/465921-003	Loden/Sky
ZLV04/465921-004	Taupe/ Crimson
ZLV05/465921-005	Black/ Mahogany

Layers Vineyard Small – Maharam
Ancillary
52” wide
92% wool
5% polyester
3% nylon

ZLS01/465920-001	Ochre/White
ZLS02/465920-002	Scarlet/ Peony
ZLS03/465920-003	Taupe/Violet
ZLS04/465920-004	Jade/ Turquoise
ZLS05/465920-005	Ginger/Rose

Mohair Supreme - Maharam
Ancillary
54” wide
100% mohair

ZMS02/451801-072	Stonehenge
ZMS06/451801-112	Slate *
ZMS07/451801-113	Rich Chocolate *
ZMS09/451801-126	Cayenne
ZMS10/451801-127	Cognac
ZMS12/451801-129	Peat *
ZMS15/451801-133	Abyss
ZMS16/451801-134	Intrigue
ZMS18/451801-136	Lupine *
ZMS28/451801-146	League
ZMS29/451801-147	Armory *
ZMS32/451801-150	Capiz
ZMS33/451801-151	Underneath
ZMS34/451801-152	Crescent
ZMS35/451801-153	National
ZMS36/451801-154	Rooftop
ZMS37/451801-155	Skewer
ZMS38/451801-156	Party
ZMS39/451801-157	Keepsake
ZMS40/451801-158	Travel
ZMS41/451801-159	Estate
ZMS42/451801-160	Grassland
ZMS43/451801-161	Limoncello
ZMS44/451801-162	Mango
ZMS45/451801-163	Doll
ZMS46/451801-164	Carousel
ZMS47/451801-165	Palette
ZMS48/451801-166	Brandy
ZMS49/451801-167	Aristocrat
ZMS50/451801-168	Soulmate
ZMS51/451801-169	Rosette

* Colors available on Eames Lounge Chair and Ottoman.

Price Category Q

A Band Apart – Maharam
Ancillary
56” wide
75% polyester
25% cotton

ZAB01/466000-001	Unique

Brushed Camel – Maharam
Ancillary
58” wide
100% baby camel hair

ZBA01/465977-001	Albino
ZBA02/465977-002	Natural

Deconstructed Rose – Maharam
Ancillary
55” wide
65% polyester
32% cotton
3% rayon

ZDS01/466086-001	Golden
ZDS02/466086-002	Vivid
ZDS03/466086-003	Earthen

Massive Paisley – Maharam
Ancillary
57” wide
76% polyester
24% cotton

ZMV01/465915-001	Ash
ZMV03/465915-003	Cardinal
ZMV06/465915-006	Night

The Firm – Maharam
Ancillary
56” wide
75% polyester
25% cotton

ZTF03/465999-003	Unique

Price Category R

Borders – Maharam
Ancillary
53” wide
98% wool
2% polyester

ZBB01/466082-001	Natural
ZBB02/466082-002	Greige
ZBB03/466082-003	Charcoal
ZBB04/466082-004	Walnut

Stow Leather - Maharam
Ancillary
approx. 50 sq. ft. per hide
100% leather
protective top coat

ZSV01/700014-001	Opera
ZSV02/700014-002	Japonica
ZSV03/700014-003	Masquerade
ZSV04/700014-004	Laguna
ZSV05/700014-005	Jettison
ZSV06/700014-006	Razor
ZSV07/700014-007	Holiday
ZSV08/700014-008	Patchouli
ZSV09/700014-009	Macrame
ZSV10/700014-010	Grace
ZSV11/700014-011	Seraphim
ZSV12/700014-012	Ricotta
ZSV13/700014-013	Neroli
ZSV14/700014-014	Sultana
ZSV15/700014-015	Sundance
ZSV16/700014-016	Quince
ZSV17/700014-017	Babka
ZSV18/700014-018	Maitake
ZSV19/700014-019	Mercer
ZSV20/700014-020	Gaucho
ZSV21/700014-021	Chia
ZSV22/700014-022	Vanguard
ZSV23/700014-023	Zone
ZSV24/700014-024	Zeppelin

Price category R continued on next page

- Maharam textiles are on assigned lead times. A
- Fabric numbers are listed as Herman Miller fabric number/Maharam fabric number.

Price Category R
continued

Stow Leather *continued*
ZSV25/700014-025 Clandestine
ZSV26/700014-026 Raven
ZSV27/700014-027 Cabana
ZSV28/700014-028 Rime
ZSV29/700014-029 Forsythia
ZSV30/700014-030 Panthera
ZSV31/700014-031 Dune
ZSV32/700014-032 Madera
ZSV33/700014-033 Russet
ZSV34/700014-034 Gala
ZSV35/700014-035 Heron

Price Category S

Bavaria – Maharam	
Ancillary	
55” wide	
73% polyester	
27% cotton	
ZBV01/466162-001	Unique

Price Category T

All Grain Leather – Edelman	
Ancillary	
approx. 50 sq. ft. per hide	
100% full-grain Aniline-dye cowhide	
VB01/AG01	Pitch Brown
VB02/AG02	White
VB03/AG03	Cloud
VB04/AG04	Shadow
VB05/AG05	Black
VB06/AG06	Baked Bean
VB07/AG07	Mildew
VB08/AG08	Soot
VB09/AG09	Blue Jeans
VB10/AG10	Merlot
VB11/AG11	Nutmeg
VB12/AG12	Butter
VB13/AG13	Cherry
VB14/AG14	Burnt Orange
VB15/AG15	Whiskey
VB17/AG17	Raw Silk
VB18/AG18	Balsa
VB19/AG19	Naturale
VB21/AG21	Greige
VB22/AG27	Latte
VB23/AG28	Coral
VB24/AG29	Rose
VB25/AG30	Zinnia
VB26/AG31	Iris
VB27/AG32	Daffodil

Hours – Maharam	
Ancillary	
56” wide	
95% wool	
3% nylon	
2% rayon	
ZKR01/466092-001	Day
ZKR02/466092-002	Night

Price Category U

Layers Garden Double – Maharam	
Ancillary	
52” wide	
96% wool	
3% nylon	
1% polyester	
ZLD01/465917-001	Ash/ Quartz/ Grass
ZLD02/465917-002	Earth/ Chocolate/ Coral
ZLD03/465917-003	Black/ Navy/ Cobalt

Layers Park Double – Maharam	
Ancillary	
52” wide	
96% wool	
3% nylon	
1% polyester	
ZLB01/465919-001	Mineral/ Taupe/ Lemon
ZLB02/465919-002	Sienna/ Ginger/ Rose
ZLB03/465919-003	Black/ Peat/ Copper

- Maharam textiles are on assigned lead times. A
- Fabric numbers are listed as Herman Miller fabric number/Maharam fabric number.

Price Category V-W

No fabrics available at this time.

Price Category X

Eden – Maharam
Ancillary
56” wide
83% polyester
17% cotton
ZED01/466258-001 001
ZED02/466258-002 002
ZED03/466258-003 003
ZED04/466258-004 004
ZED05/466258-005 005

Foliage – Maharam
Ancillary
56” wide
75% polyester
25% cotton
ZFG02/466257-002 002
ZFG04/466257-004 004
ZFG05/466257-005 005

Price Category Y

Industry – Maharam
Ancillary
55” wide
80% polyester
20% cotton
ZND01/466255-001 001

Price Category Z

Agency – Maharam
Ancillary
55” wide
75% polyester
25% cotton
ZAG02/466001-002 002
ZAG04/466001-004 004
ZAG05/466001-005 005
ZAG06/466001-006 006
ZAG07/466001-007 007
ZAG08/466001-008 008

- Maharam textiles are on assigned lead times. A
- Fabric numbers are listed as Herman Miller fabric number/Maharam fabric number.

Price Category 10M

Pace Leather – Maharam	
Ancillary	
approx. 50 sq. ft. per hide	
100% leather	
ZPA01/700011-001	Whisper
ZPA02/700011-002	Shy
ZPA03/700011-003	Granite
ZPA04/700011-004	Misty
ZPA05/700011-005	Studio
ZPA06/700011-006	Throne
ZPA07/700011-007	Proper
ZPA08/700011-008	Huron
ZPA09/700011-009	Darkroom
ZPA10/700011-010	Bark
ZPA11/700011-011	Raspberry
ZPA12/700011-012	Sangria
ZPA13/700011-013	Admiral
ZPA14/700011-014	Juniper
ZPA15/700011-015	Regal
ZPA16/700011-016	Vapor
ZPA17/700011-017	Valley
ZPA18/700011-018	Bushel
ZPA19/700011-019	Heirloom
ZPA20/700011-020	Palomino
ZPA21/700011-021	Bamboo
ZPA22/700011-022	Saffron
ZPA23/700011-023	Tearose
ZPA24/700011-024	Canyon
ZPA25/700011-025	Bistro
ZPA26/700011-026	Toffee
ZPA27/700011-027	Rodeo
ZPA28/700011-028	Mudslide
ZPA29/700011-029	Greige
ZPA30/700011-030	Reflection
ZPA31/700011-031	Pure
ZPA32/700011-032	Desert
ZPA33/700011-033	Griffin
ZPA34/700011-034	Urbane
ZPA35/700011-035	Woodrose

- Maharam textiles are on assigned lead times. A
- Fabric numbers are listed as Herman Miller fabric number/Maharam fabric number.

For more information about our products and services or to see a list of dealers, please visit us at HermanMiller.com or call (800) 851 1196.

© 2024 Herman Miller, Inc., Zeeland, Michigan

Distribution Rights

Working together since 1956, Herman Miller and Vitra are the authentic sources of designs by Charles and Ray Eames, Alexander Girard, and George Nelson. All the designs shown in this book are protected by law. Herman Miller has obtained all rights to make and sell these designs. Also, Herman Miller holds exclusive worldwide manufacturing and distribution rights for these products with the following exceptions:

Charles and Ray Eames, George Nelson, and Alexander Girard—Worldwide distribution rights for furniture in all areas except Europe and the Middle East. For those areas, please contact Vitra.

Isamu Noguchi—Worldwide distribution rights for the Noguchi Rudder Table. Distribution rights for the Noguchi Table in North America and Central America only. For all other areas, please contact Vitra.

Magis—Exclusive distribution rights in the US and Canada. For all other areas, please contact Magis.

® HermanMiller, ☻, 3D Intelligent, 8Z Pellicle, AO, Action Office, Aeron, Aside, Bubble Lamps, Canvas Office Landscape, Caper, Celle, Cosm, Co/Struc, Daisyone, Distil, Eames, Eco-Dematerialized, Embody, Envelop, Ethospace, Exclave, Fine-Tune, FlexFront, Flo, Formcoat, Formwork, Ground Cloth, Intent, Kinemat, Layout Studio, Lino, Live Unframed, Living Office, Maharam, Meridian, Mirra, Motia, Nelson, Pari, Pellicle, Perspectives, Plex, PostureFit, PostureFit SL, Public Office Landscape, Sayl, Setu, Striad, Tu, Ubi, Verus, Wishbone, Y-Tower and Zeph are among the registered trademarks of Herman Miller, Inc., and its owned subsidiaries.

™ About Face, AireWeave, Airia, Ambit, Asari Chair by HermanMiller, Backfit, Bubbletack, Burdick Group, Butterfly Back, Canvas Vista, Cellular Suspension, Commend, Compass, Connect, DOT, Duracare, Durawrap, EnhancedAccess, Everywhere, Flex-Edge, Flute, Harmonic, Headway, Herman Miller Select, Hopsak 2, Iota, Keyless Entry, Latitude, Logic Mini, Logic Power Access Solutions, Lyris, Lyris 2, Made-to-Measure Storage, Mora, Multiscrim, Nevi, OE1, OE1 Workspace Collection, Overlay, Pixelated Support, Pronta, Renew, Sense, Soft Pad, Stackable, Stackable Storage, Swoop, Thrive, Tone, TriFlex, Twist and Wireframe are among the trademarks of Herman Miller, Inc., and its owned subsidiaries.

SM Herman Miller Options is among the service marks of Herman Miller, Inc.

AAP™ is a trademark of Extron Electronics.

Alexander Girard® is a registered trademark of The Alexander Girard Estate.

Chemsurf® is a registered trademark of Wilsonart International.

Corian® is a registered trademark of E. I. du Pont de Nemours and Company Corporation.

Crypton® is a registered trademark of Crypton, Inc.

DACRON® is a registered trademark of INVISTA S.a r.l.

Danzer® is a registered trademark of Danzer Holding AG.

Decora® is a registered trademark of Leviton Manufacturing Co., Inc.

Edelman® Leather is a registered trademark of Edelman Leather, Inc.

Extron® is a registered trademark of RGB Systems, Inc.

FENIX NTM® is a registered trademark of Arpa Industriale S.p.A.

FLEXNET™ is a trademark of Milliken & Company.

Floor Saver Glide® is a registered trademark of Carpin Manufacturing, Inc.

Forest Stewardship Council® is a registered trademark of the Forest Stewardship Council A.C. (FSC). We are FSC® certified (FSC® C102895).

FSC® is a registered trademark of the Forest Stewardship Council A.C. (FSC).

Geiger® is a registered trademark, and Bumper™, Saiba™, and Ward Bennett™ are trademarks, of Geiger International.

Hang-It-All® is a registered trademark of Lucia Eames Demetrios, d.b.a. Eames Office.

Holophane® is a registered trademark of Holophane.

Ingeo™ is a trademark of Cargill Dow LLC.

iPad® and Mac mini® are registered trademarks of Apple Inc.

Leviton® is a registered trademark of Leviton Manufacturing Co., Inc.

LifeSize® is a registered trademark of LifeSize Communications, Inc.

Logitech G® is a registered trademark of Logitech International S.A.

Magis®, Bombo®, and Me Too® are registered trademarks of Magis S.p.A.

MicrobeCare™ is a trademark of Parasol Medical LLC.

Microsoft® and Natural® Keyboard are registered trademarks of Microsoft Corporation.

Noguchi® and the Noguchi table configuration (trade dress) are registered trademarks, and Rudder Table™ is a trademark, of The Isamu Noguchi Foundation and Garden Museum.

Place Textiles® is a registered trademark of Place Textiles.

Sunbrella® is a registered trademark of Glen Raven, Inc.

SuperSeat™ is a trademark of Dahti Seating, a division of ITW.

Valor™ is among the trademarks owned by Nemschoff, Inc.