SPECIAL DATA

OPERATING CONDITIONS

	POWER (KW)	SPEED (RPM) TURBINE/GENERATOR	STEAM FLOW LBS./HR.
Normal Rated:	11 775	5 985/1 800	112 434
Maximum Rated:	13 438	5 985/1 800	127 779

STEAM CONDITIONS

Inlet Pressure (psia):	600
Inlet Temperature (°F):	750
Exhaust Pressure (in. HgA):	2.5

GOVERNOR SETTING

Refer to Operation and Control Setting Diagram in Volume 1, Section I, Part 4.

SERVOMOTOR AND ACTUATOR LINKAGE

Stroke (inches): 3.62

CRITICAL SPEEDS

NOTES:

a.) All speeds are turbine rotor speeds.

b.) Calculated critical speeds are the speeds at which the frequencies are the same as the natural frequencies of the various drive train rotors (re: turbine rotor, generator rotor). Resonant effects could add to the level of vibration and cause problems at these speeds.

CALCULATED LATERAL CRITICAL SPEEDS

1st Lateral (Turbine):	2 148 RPM
1st Lateral (Generator):	2 008 RPM
1st Torsional:	978 RPM
2nd Torsional:	2 808 RPM
1st Axial:	1 116 RPM

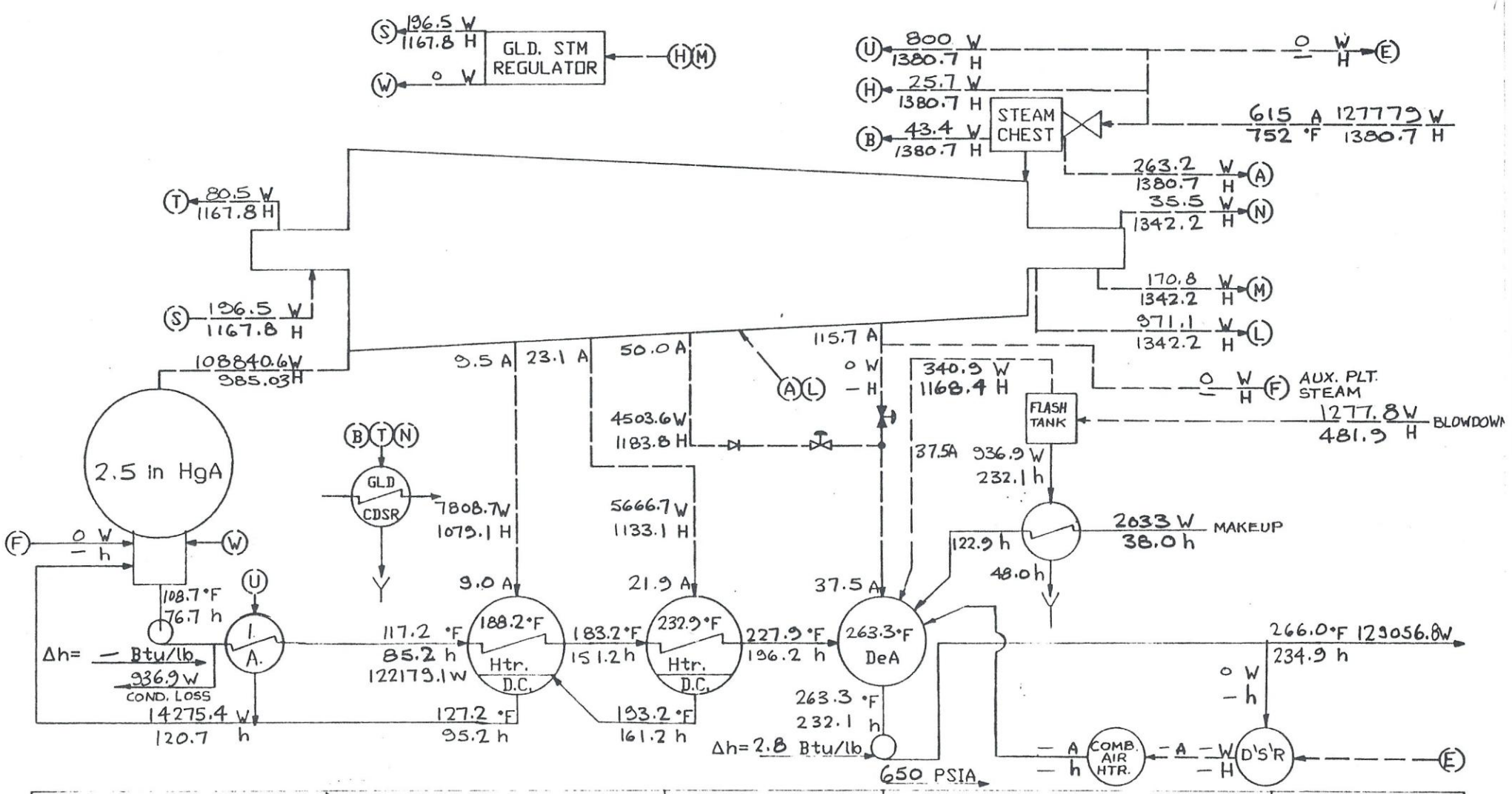

HEAT RATE = $\frac{127779(1380.7-234.9)+1277.8(481.9-234.9)}{13438}$ 10919 BTU/kW hr

(1) CALCULATIONS ARE BASED ON NO RADIATION LOSSES TO HEATERS OR EXTRACTION PIPING.
(2) HEAT RATES ARE BASED ON LOCUS FULL VALVE POINTS.
THROTTLE FLOWS ARE NOT GUARANTEED.
THROTTLE FLOW AT MAXIMUM GUARANTEED LOAD= LB/HR.
THROTTLE FLOW AT MAXIMUM CALCULATED LOAD= LB/HR.
THROTTLE FLOW AT MAXIMUM CALCULATED 5 PERCENT OVERPRESSURE LOAD = LB/HR.

TEP = 984.8 BTU/LB
ELEP = — BTU/LB
MECH. LOSS= 225 kW
ELEC. LOSS= 316 kW
PF= .9
BFP POWER= 105 kW
BFP EFFY = .85
FRAME M2533A3

NAMEPLATE RATING
13438 kW TURBINE GENERATOR UNIT
600 psig 752 °F 2.5 in HgA
14930 kVA .9 pf 13.8 kV

13438 kW 100 % Rated Load
PEAK LOAD

WESTINGHOUSE CANADA INC.
Hamilton, Ontario.
ENGR. [illegible]
Date 86/8/20
No. HB-8890-A1

REV 2

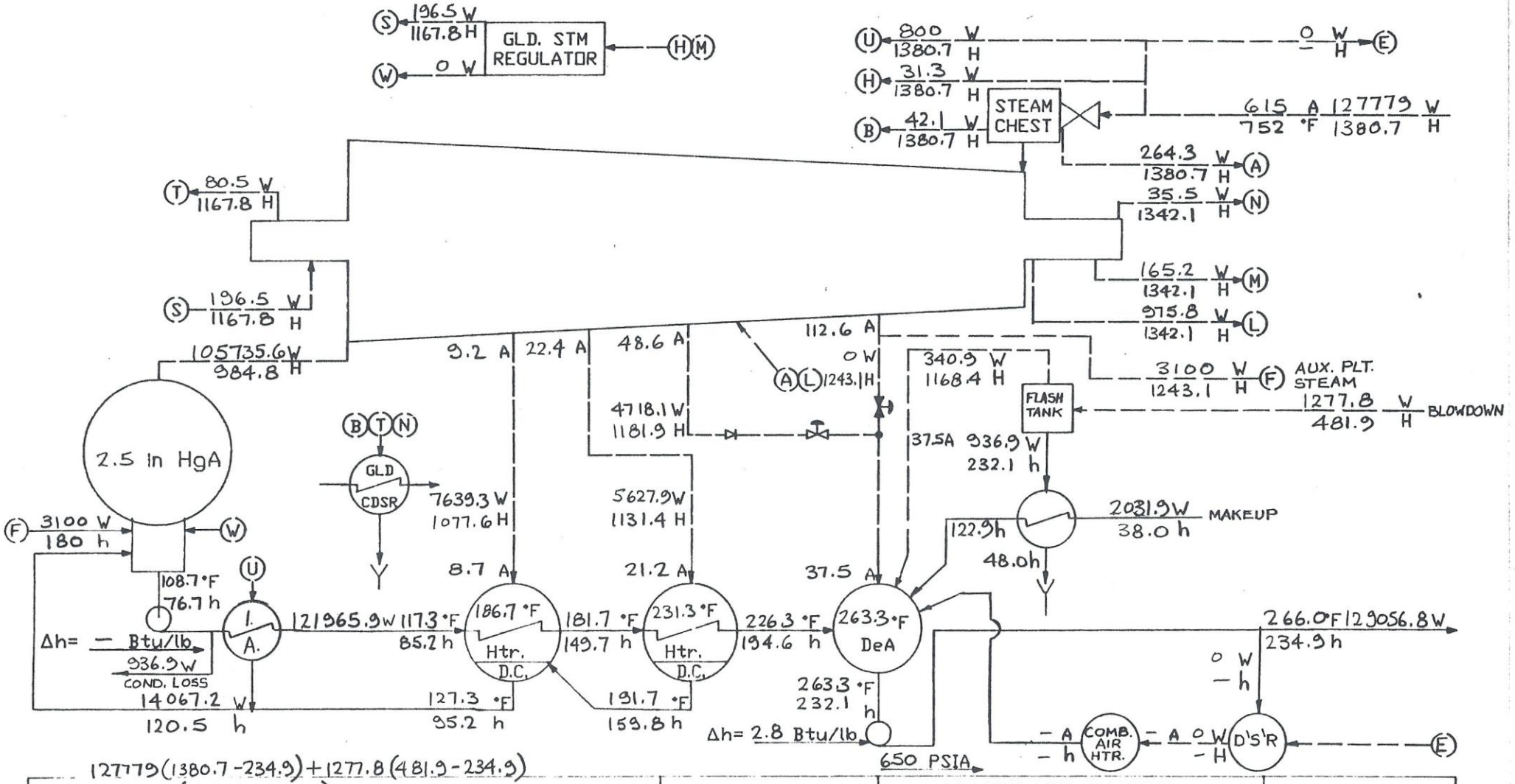

$$\text{HEAT RATE} = \frac{127779(1380.7-234.9)+1277.8(481.9-234.9)-3100(1243.1-180.0)}{13217} = 10852 \ \frac{\text{BTU}}{\text{kW hr}}$$

(1) CALCULATIONS ARE BASED ON NO RADIATION LOSSES TO HEATERS OR EXTRACTION PIPING.
(2) HEAT RATES ARE BASED ON LOCUS FULL VALVE POINTS.
THROTTLE FLOWS ARE NOT GUARANTEED.
THROTTLE FLOW AT MAXIMUM GUARANTEED LOAD= LB/HR.
THROTTLE FLOW AT MAXIMUM CALCULATED LOAD= LB/HR.
THROTTLE FLOW AT MAXIMUM CALCULATED 5 PERCENT OVERPRESSURE LOAD = LB/HR.

TEF = 984.6 BTU/LB
ELEP = — BTU/LB
MECH. LOSS= 225 kW
ELEC. LOSS= 312 kW
PF= .9
BFP POWER= 104.7 kW
BFP EFFY = .85
FRAME M2533A3

NAMEPLATE RATING
13438 kW TURBINE GENERATOR UNIT
600 psig 752 °F 2.5 in HgA
14930 kVA .9 pf 13.8 kV
13217 kW 98 % Rated Load
PEAK LOAD + AUX PLT. STEAM

WESTINGHOUSE CANADA INC.
Hamilton, Ontario.
ENGR. M. Mackay
Date 86/8/20
No. HB-8890-A2
REV. 2

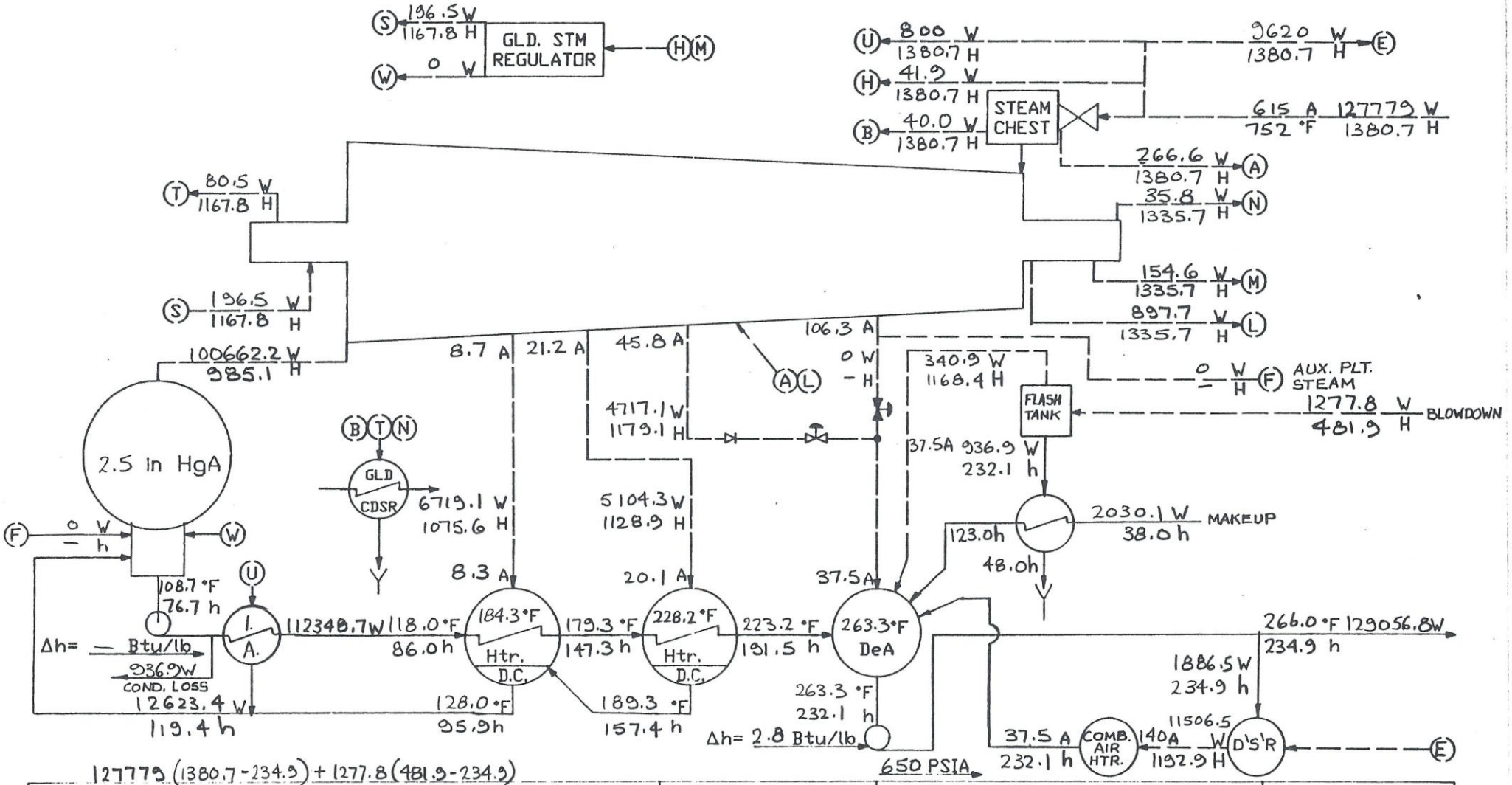

$$\text{HEAT RATE} = \frac{127779(1380.7-234.9)+1277.8(481.9-234.9) - 9620(1380.7-232.1)}{12400} = 10941 \ \frac{\text{BTU}}{\text{kW hr}}$$

(1) CALCULATIONS ARE BASED ON NO RADIATION LOSSES TO HEATERS OR EXTRACTION PIPING.
(2) HEAT RATES ARE BASED ON LOCUS FULL VALVE POINTS.
THROTTLE FLOWS ARE NOT GUARANTEED.
THROTTLE FLOW AT MAXIMUM GUARANTEED LOAD= LB/HR.
THROTTLE FLOW AT MAXIMUM CALCULATED LOAD= LB/HR.
THROTTLE FLOW AT MAXIMUM CALCULATED 5 PERCENT OVERPRESSURE LOAD = LB/HR.

TEF = 984.9 BTU/LB
ELEP = — BTU/LB
MECH. LOSS= 225 kW
ELEC. LOSS= 297 kW
PF= .9
BFP POWER= 106 kW
BFP EFFY =.85
FRAME M2533A3

NAMEPLATE RATING
13438 kW TURBINE GENERATOR UNIT
600 psig 752 °F 2.5 in HgA
14930 kVA .9 pf 13.8 kV
12400 kW 92 % Rated Load
PEAK LOAD + COMB. AIR HTR.

WESTINGHOUSE CANADA INC.
Hamilton, Ontario.
ENGR. [illegible]
Date 86/8/20
No. HB-8890-A3
REV 2

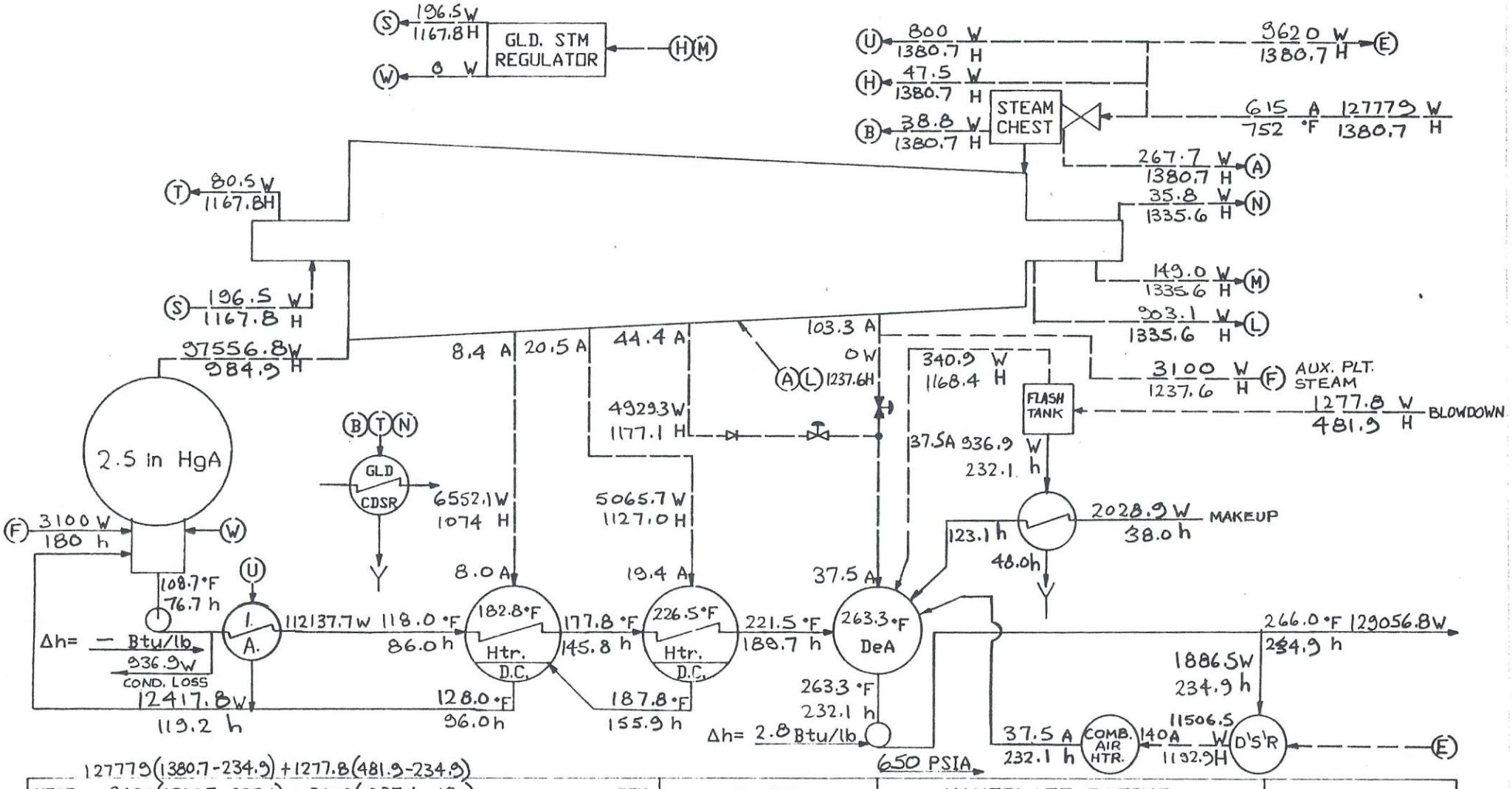

$$\text{HEAT RATE} = \frac{127779(1380.7-234.9)+1277.8(481.9-234.9) - 9620(1380.7-232.1) - 3100(1237.6-180)}{12183} = 10867 \ \frac{\text{BTU}}{\text{kW hr}}$$

(1) CALCULATIONS ARE BASED ON NO RADIATION LOSSES TO HEATERS OR EXTRACTION PIPING.
(2) HEAT RATES ARE BASED ON LOCUS FULL VALVE POINTS.
THROTTLE FLOWS ARE NOT GUARANTEED.
THROTTLE FLOW AT MAXIMUM GUARANTEED LOAD= LB/HR.
THROTTLE FLOW AT MAXIMUM CALCULATED LOAD= LB/HR.
THROTTLE FLOW AT MAXIMUM CALCULATED 5 PERCENT OVERPRESSURE LOAD = LB/HR.

TEP = 984.7 BTU/LB
ELEP = — BTU/LB
MECH. LOSS= 225 kW
ELEC. LOSS= 294 kW
PF= .9
BFP POWER= 106 kW
BFP EFFY = .85
FRAME M2533A3

NAMEPLATE RATING
13438 kW TURBINE GENERATOR UNIT
600 psig 752 °F 2.5 in HgA
14930 kVA .9 pf 13.8 kV

12183 kW 91 % Rated Load
PEAK LOAD
AUX PLT. STEAM + COMB. AIR HTR.

WESTINGHOUSE CANADA INC.
Hamilton, Ontario.
ENGR. L. Mackay
Date 86/8/20
No. HB-8890-A4
REV. 2

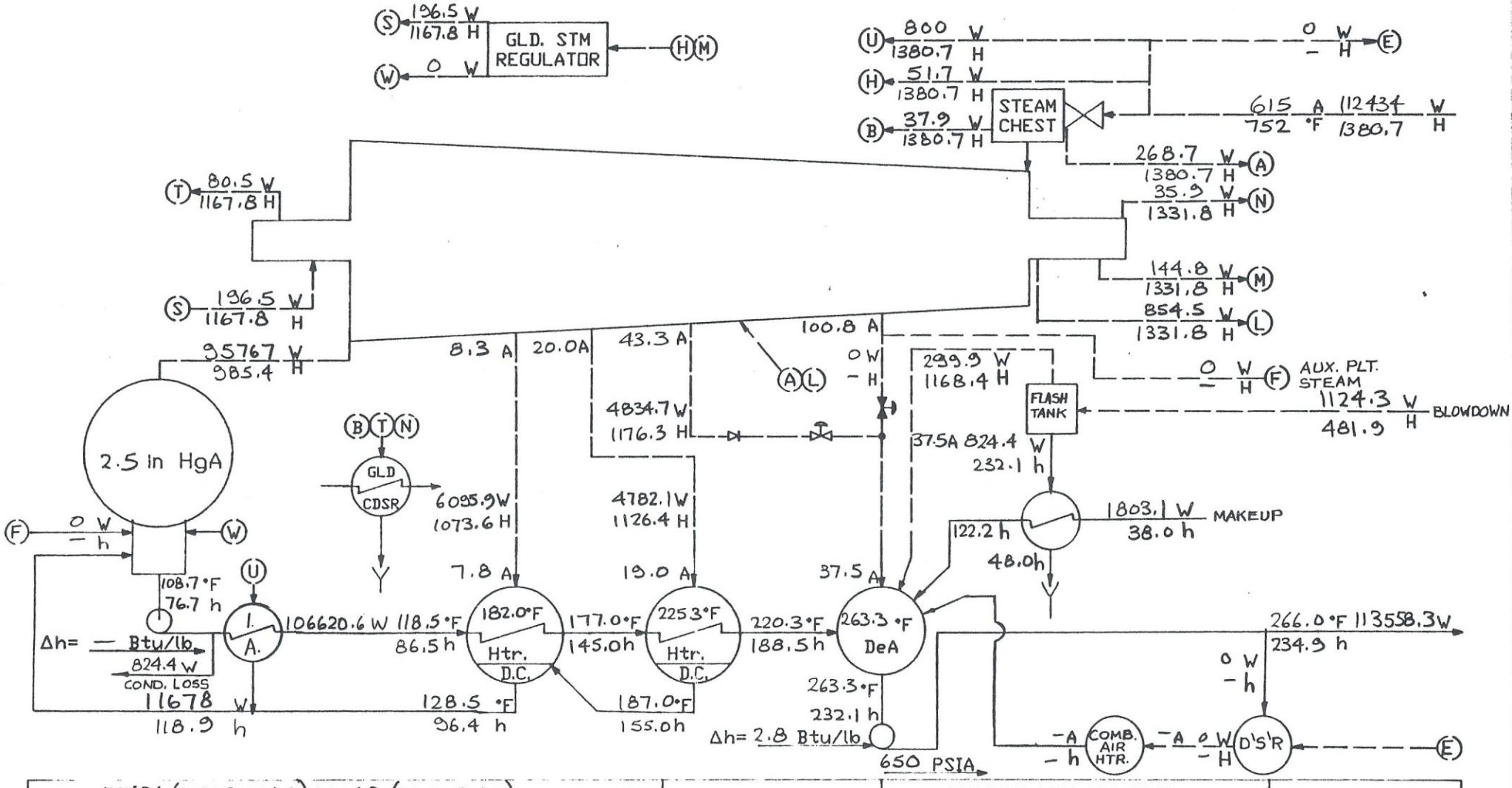

$$\text{HEAT RATE} = \frac{112434\,(1380.7-234.9)+1124.3\,(481.9-234.9)}{11775} = 10964 \ \frac{\text{BTU}}{\text{kW hr}}$$

(1) CALCULATIONS ARE BASED ON NO RADIATION LOSSES TO HEATERS OR EXTRACTION PIPING.
(2) HEAT RATES ARE BASED ON LOCUS FULL VALVE POINTS.
THROTTLE FLOWS ARE NOT GUARANTEED.
THROTTLE FLOW AT MAXIMUM GUARANTEED LOAD= LB/HR.
THROTTLE FLOW AT MAXIMUM CALCULATED LOAD= LB/HR.
THROTTLE FLOW AT MAXIMUM CALCULATED 5 PERCENT OVERPRESSURE LOAD = LB/HR.

TEP = 985.1 BTU/LB
ELEP = — BTU/LB
MECH. LOSS= 225 kW
ELEC. LOSS= 287 kW
PF= .9
BFP POWER= 92 kW
BFP EFFY = .85
FRAME M2533A3

NAMEPLATE RATING
13438 kW TURBINE GENERATOR UNIT
600 psig 752 °F 2.5 in HgA
14930 kVA .9 pf 13.8 kV

11775 kW 88 % Rated Load
MCR LOAD

WESTINGHOUSE CANADA INC.
Hamilton, Ontario.
ENGR. M. Mackay
Date 86/8/20
No. HB-8890-B1
REV 2

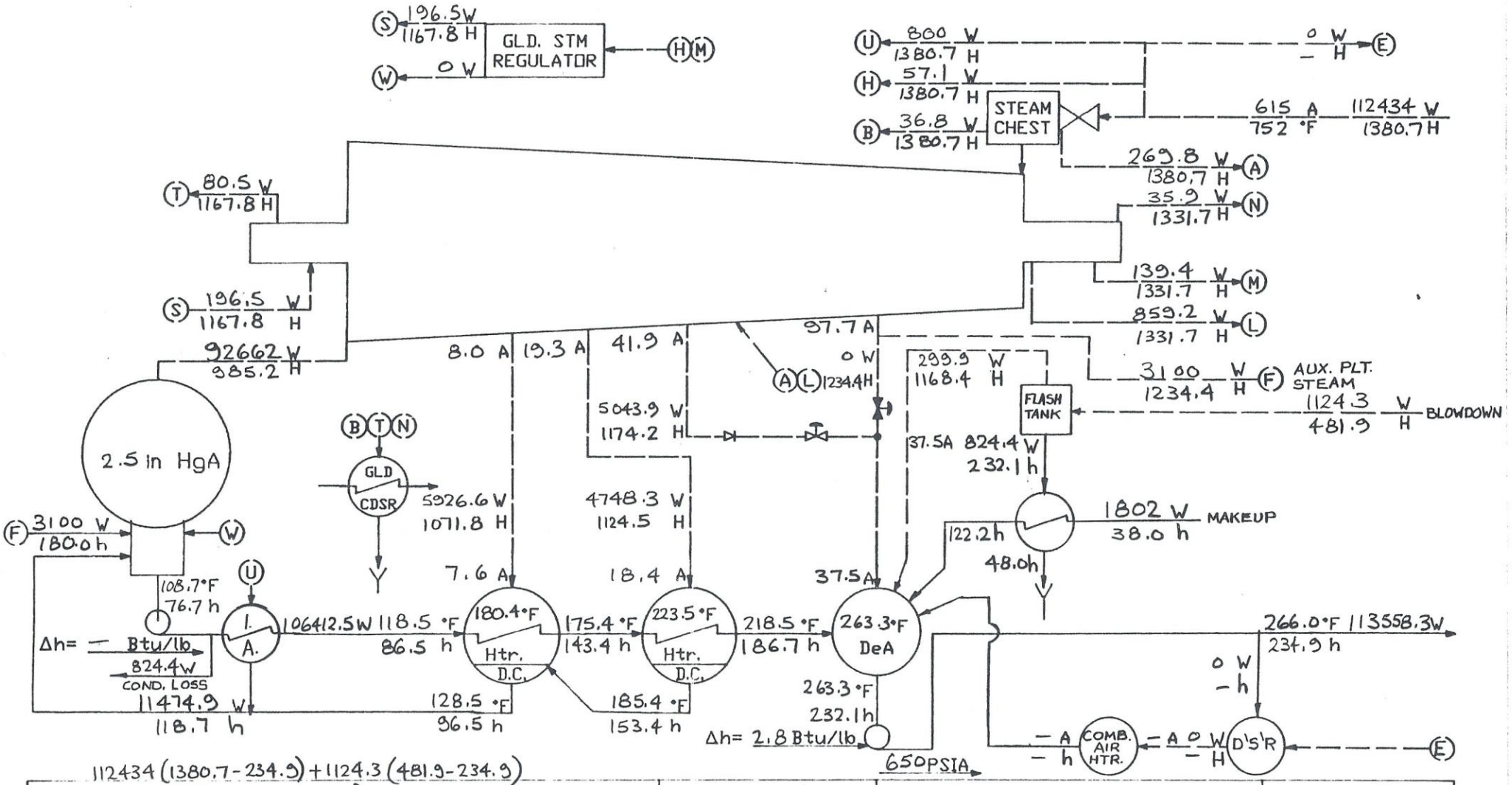

$$\text{HEAT RATE} = \frac{112434(1380.7-234.9)+1124.3(481.9-234.9)-3100(1234.4-180.0)}{11559} = 10886 \ \frac{\text{BTU}}{\text{kW hr}}$$

(1) CALCULATIONS ARE BASED ON NO RADIATION LOSSES TO HEATERS OR EXTRACTION PIPING.
(2) HEAT RATES ARE BASED ON LOCUS FULL VALVE POINTS.
THROTTLE FLOWS ARE NOT GUARANTEED.
THROTTLE FLOW AT MAXIMUM GUARANTEED LOAD= LB/HR.
THROTTLE FLOW AT MAXIMUM CALCULATED LOAD= LB/HR.
THROTTLE FLOW AT MAXIMUM CALCULATED 5 PERCENT OVERPRESSURE LOAD = LB/HR.

TEF = 985.0 BTU/LB
ELEP = — BTU/LB
MECH. LOSS= 225 kW
ELEC. LOSS= 283 kW
PF= .9
BFP POWER= 92 kW
BFP EFFY = .85
FRAME M2533A3

NAMEPLATE RATING
13438 kW TURBINE GENERATOR UNIT
600 psig 752 °F 2.5 in HgA
14930 kVA .9 pf 13.8 kV
11559 kW 86 % Rated Load
MCR LOAD + AUX. PLT. STEAM

WESTINGHOUSE CANADA INC.
Hamilton, Ontario.
ENGR. [illegible]
Date 86/8/20
No. HB-8890-B2
REV. 2

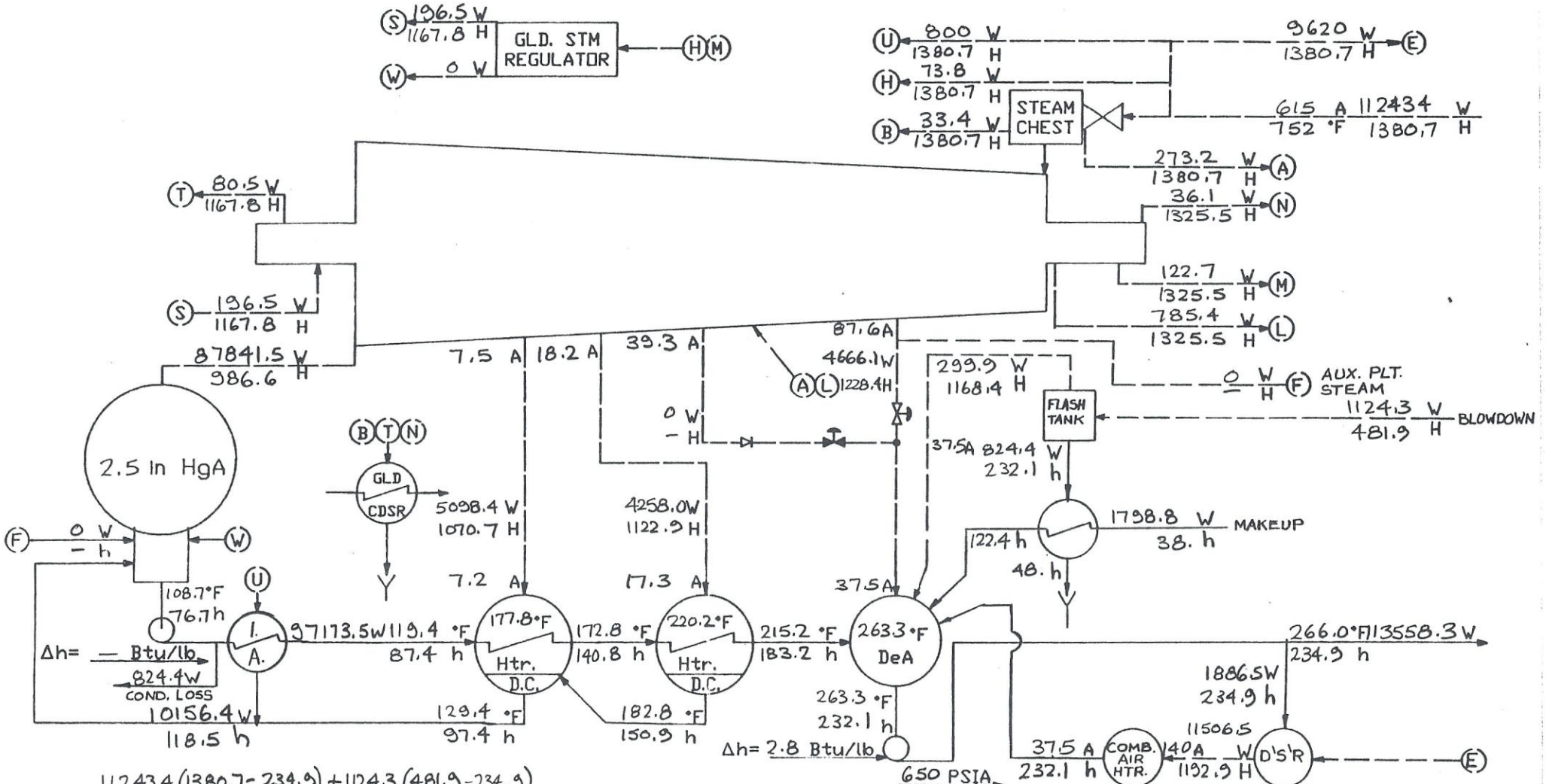

$$\text{HEAT RATE} = \frac{112434(1380.7-234.9)+1124.3(481.9-234.9) - 9620(1380.7-232.1)}{10641} = 11094 \ \frac{\text{BTU}}{\text{kW hr}}$$

(1) CALCULATIONS ARE BASED ON NO RADIATION LOSSES TO HEATERS OR EXTRACTION PIPING.
(2) HEAT RATES ARE BASED ON LOCUS FULL VALVE POINTS.
THROTTLE FLOWS ARE NOT GUARANTEED.
THROTTLE FLOW AT MAXIMUM GUARANTEED LOAD= LB/HR.
THROTTLE FLOW AT MAXIMUM CALCULATED LOAD= LB/HR.
THROTTLE FLOW AT MAXIMUM CALCULATED 5 PERCENT OVERPRESSURE LOAD = LB/HR.

TEF = 986.4 BTU/LB
ELEP = — BTU/LB
MECH. LOSS= 225 kW
ELEC. LOSS= 269 kW
PF= .9
BFF POWER= kW
BFF EFFY = .85
FRAME M2533A3

NAMEPLATE RATING
13438 kW TURBINE GENERATOR UNIT
600 psig 752 °F 2.5 In HgA
14930 kVA .9 pf 13.8 kV
10641 kW 79 % Rated Load
MCR + COMB AIR HTR.

WESTINGHOUSE CANADA INC.
Hamilton, Ontario.
ENGR. [illegible]
Date 86/8/20
No. HB-8890-B3

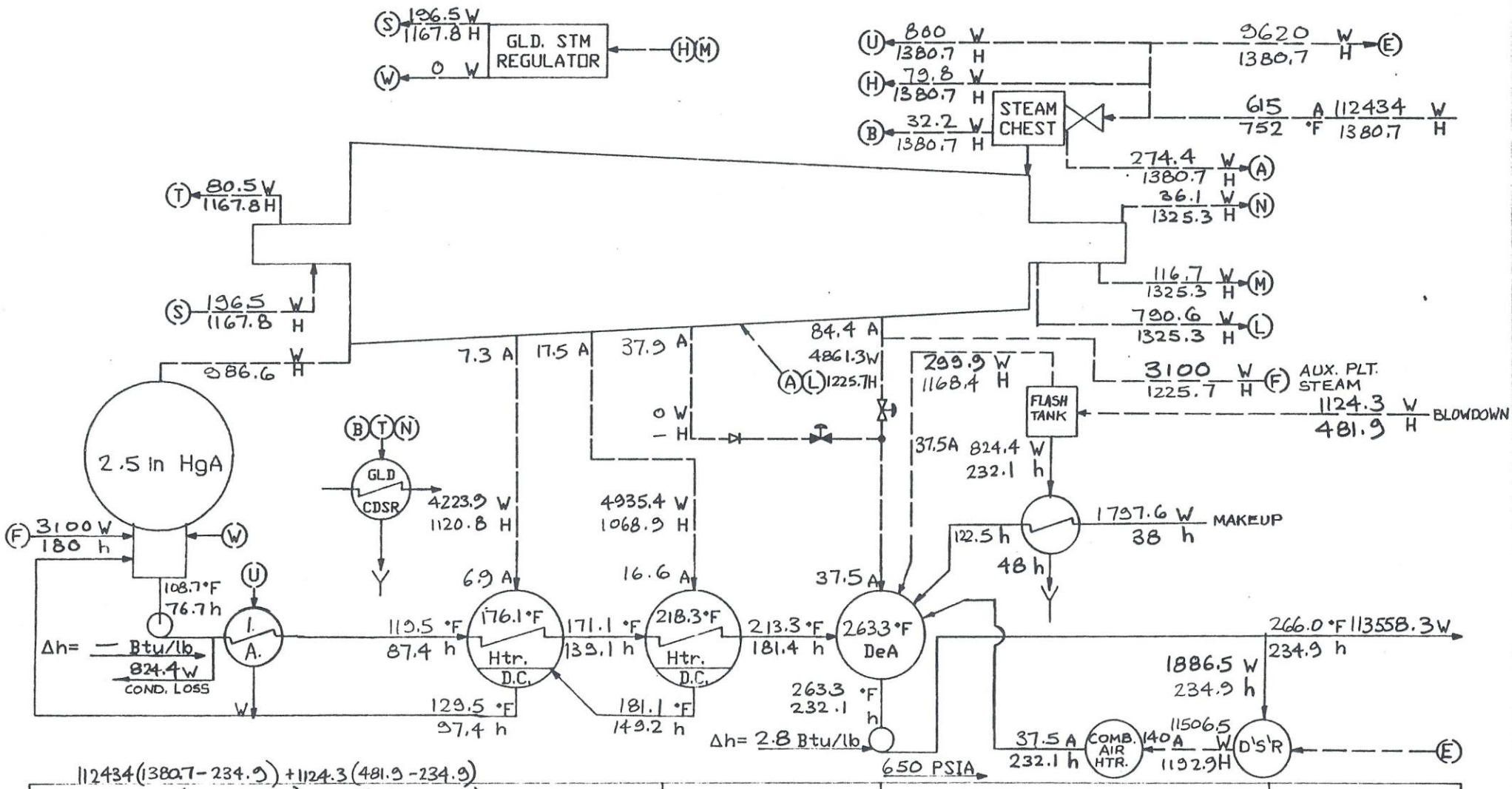

$$\text{HEAT RATE} = \frac{112434(1380.7-234.9)+1124.3(481.9-234.9)-9620(1380.7-232.1)-3100(1225.7-180)}{10427} = 11011 \ \frac{\text{BTU}}{\text{kW hr}}$$

(1) CALCULATIONS ARE BASED ON NO RADIATION LOSSES TO HEATERS OR EXTRACTION PIPING.
(2) HEAT RATES ARE BASED ON LOCUS FULL VALVE POINTS.

THROTTLE FLOWS ARE NOT GUARANTEED.
THROTTLE FLOW AT MAXIMUM GUARANTEED LOAD= LB/HR.
THROTTLE FLOW AT MAXIMUM CALCULATED LOAD= LB/HR.
THROTTLE FLOW AT MAXIMUM CALCULATED 5 PERCENT OVERPRESSURE LOAD = LB/HR.

TEP = 986.4 BTU/LB
ELEP = — BTU/LB
MECH. LOSS= 225 kW
ELEC. LOSS= 266 kW
PF= .9
BFP POWER= 94 kW
BFP EFFY = .85
FRAME M2533A3

NAMEPLATE RATING
13438 kW TURBINE GENERATOR UNIT
600 psig 752 °F 2.5 in HgA
14930 kVA .9 pf 13.8 kV
10427 kW 78 % Rated Load
MCR LOAD + AUX.PLT. STM. + COMB. AIR HTR.

WESTINGHOUSE CANADA INC.
Hamilton, Ontario.
ENGR. [illegible]
Date 86/8/20
No. HB-8890-B4
REV 1

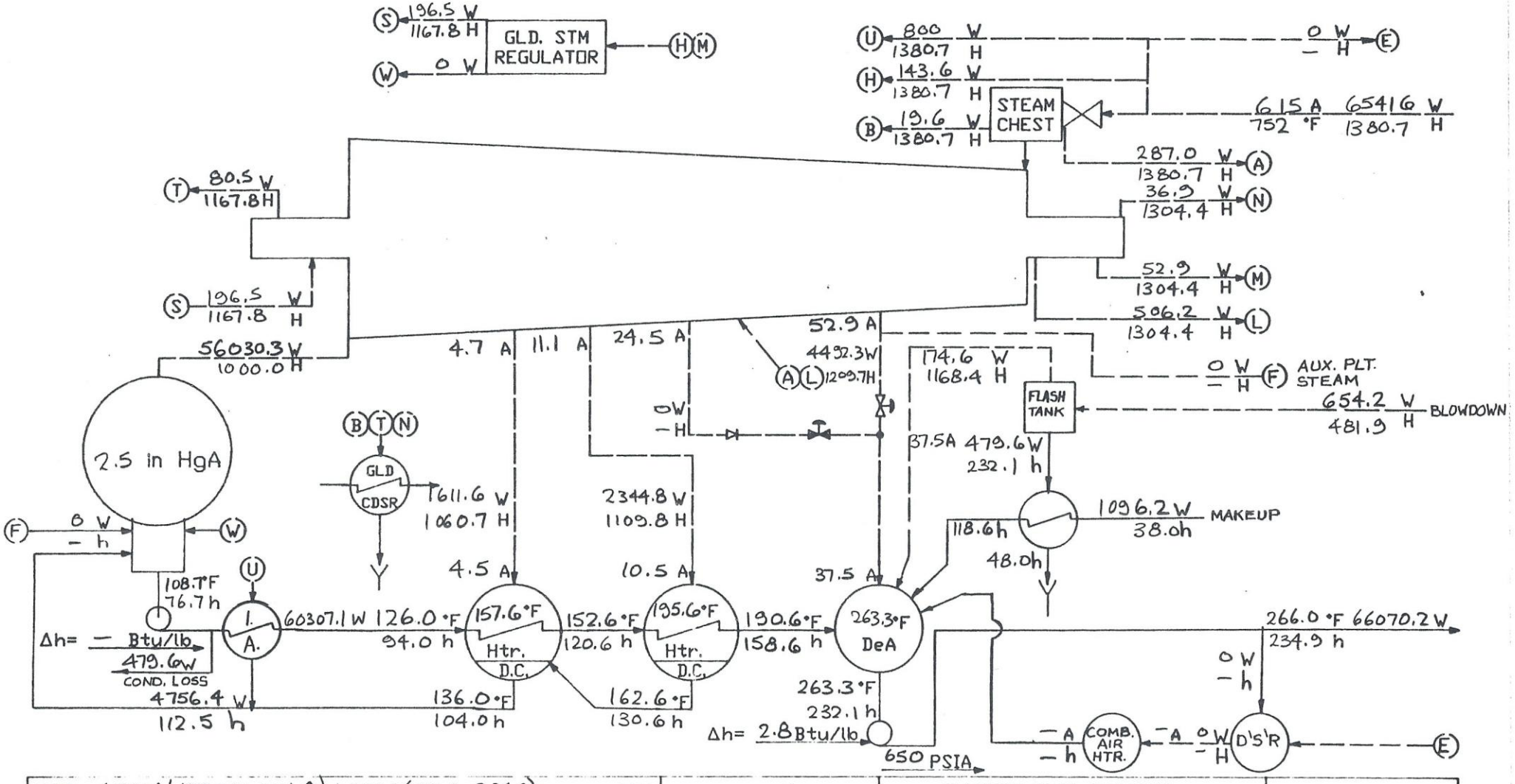

HEAT RATE = $\frac{65416(1380.7-234.9)+654.2(481.9-234.9)}{6386} = 11762$ BTU / kW hr

(1) CALCULATIONS ARE BASED ON NO RADIATION LOSSES TO HEATERS OR EXTRACTION PIPING.
(2) HEAT RATES ARE BASED ON LOCUS FULL VALVE POINTS.
THROTTLE FLOWS ARE NOT GUARANTEED.
THROTTLE FLOW AT MAXIMUM GUARANTEED LOAD= LB/HR.
THROTTLE FLOW AT MAXIMUM CALCULATED LOAD= LB/HR.
THROTTLE FLOW AT MAXIMUM CALCULATED 5 PERCENT OVERPRESSURE LOAD = LB/HR.

TEP = 999.6 BTU/LB
ELEP = — BTU/LB
MECH. LOSS= 225 kW
ELEC. LOSS= 210 kW
PF= .9
BFP POWER= 54 kW
BFP EFFY = .85
FRAME M2533A3

NAMEPLATE RATING
13438 kW TURBINE GENERATOR UNIT
600 psig 752 °F 2.5 in HgA
14930 kVA .9 pf 13.8 kV
6386 kW 47. % Rated Load
MIN LOAD

WESTINGHOUSE CANADA INC. Hamilton, Ontario.
ENGR. [illegible]
Date 86/8/20
No. HB-8890-C1

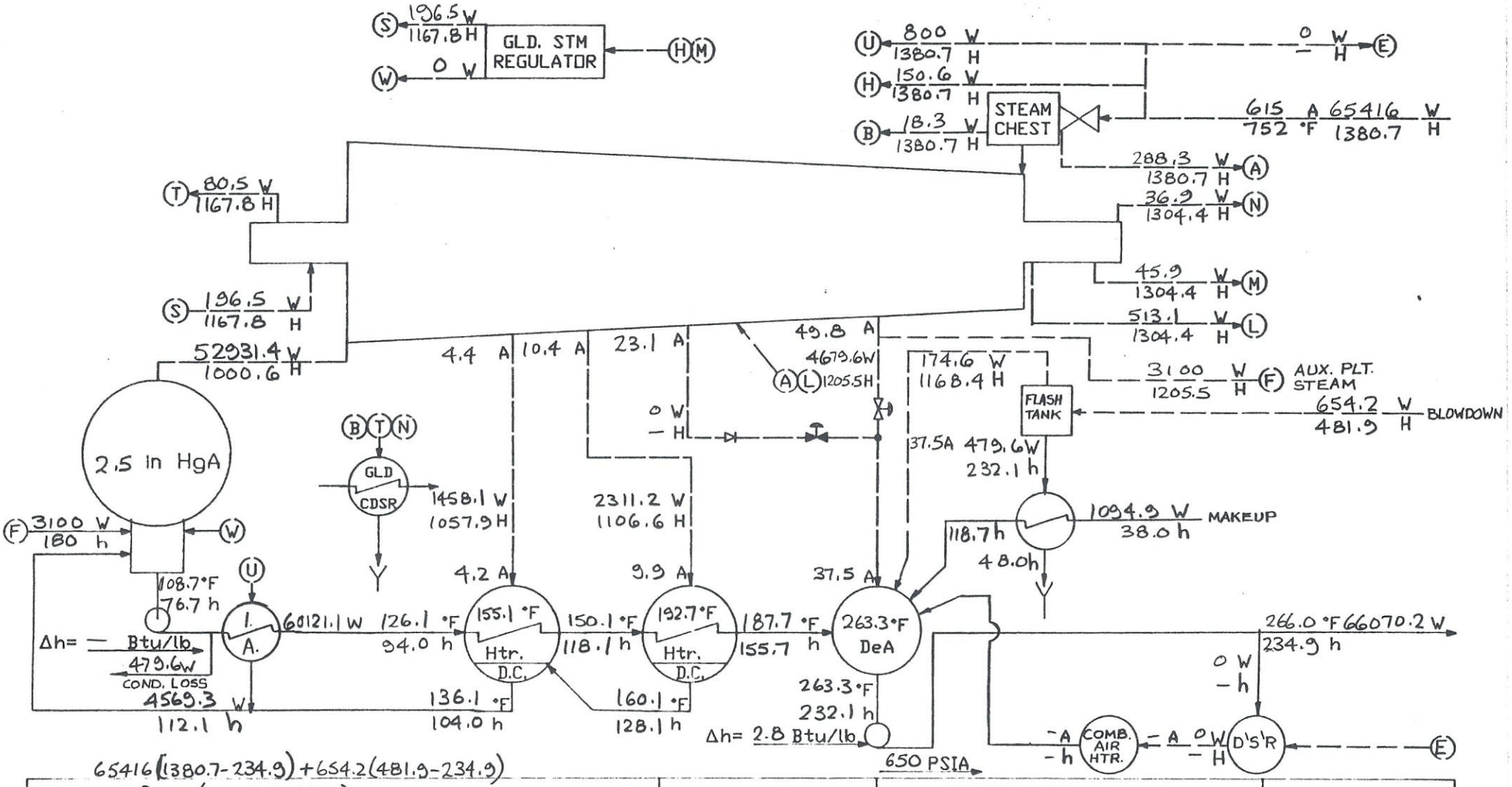

$$\text{HEAT RATE} = \frac{65416(1380.7-234.9)+654.2(481.9-234.9)-3100(1205.5-180.)}{6181} = 11638 \ \frac{\text{BTU}}{\text{kW hr}}$$

(1) CALCULATIONS ARE BASED ON NO RADIATION LOSSES TO HEATERS OR EXTRACTION PIPING.
(2) HEAT RATES ARE BASED ON LOCUS FULL VALVE POINTS.

THROTTLE FLOWS ARE NOT GUARANTEED.
THROTTLE FLOW AT MAXIMUM GUARANTEED LOAD= LB/HR.
THROTTLE FLOW AT MAXIMUM CALCULATED LOAD= LB/HR.
THROTTLE FLOW AT MAXIMUM CALCULATED 5 PERCENT OVERPRESSURE LOAD = LB/HR.

TEF = 1000.2 BTU/LB
ELEP = — BTU/LB
MECH. LOSS= 225 kW
ELEC. LOSS= 209 kW
PF= .9
BFF POWER= 54 kW
BFF EFFY = .85
FRAME M2533A3

NAMEPLATE RATING
13438 kW TURBINE GENERATOR UNIT
600 psig 752 °F 2.5 in HgA
14930 kVA .9 pf 13.8 kV

6181 kW 46 % Rated Load
MIN LOAD + AUX PLT. STEAM

WESTINGHOUSE CANADA INC.
Hamilton, Ontario.
ENGR. L. Mackay
Date 86/8/20
No. HB-8890-C2
REV. 2

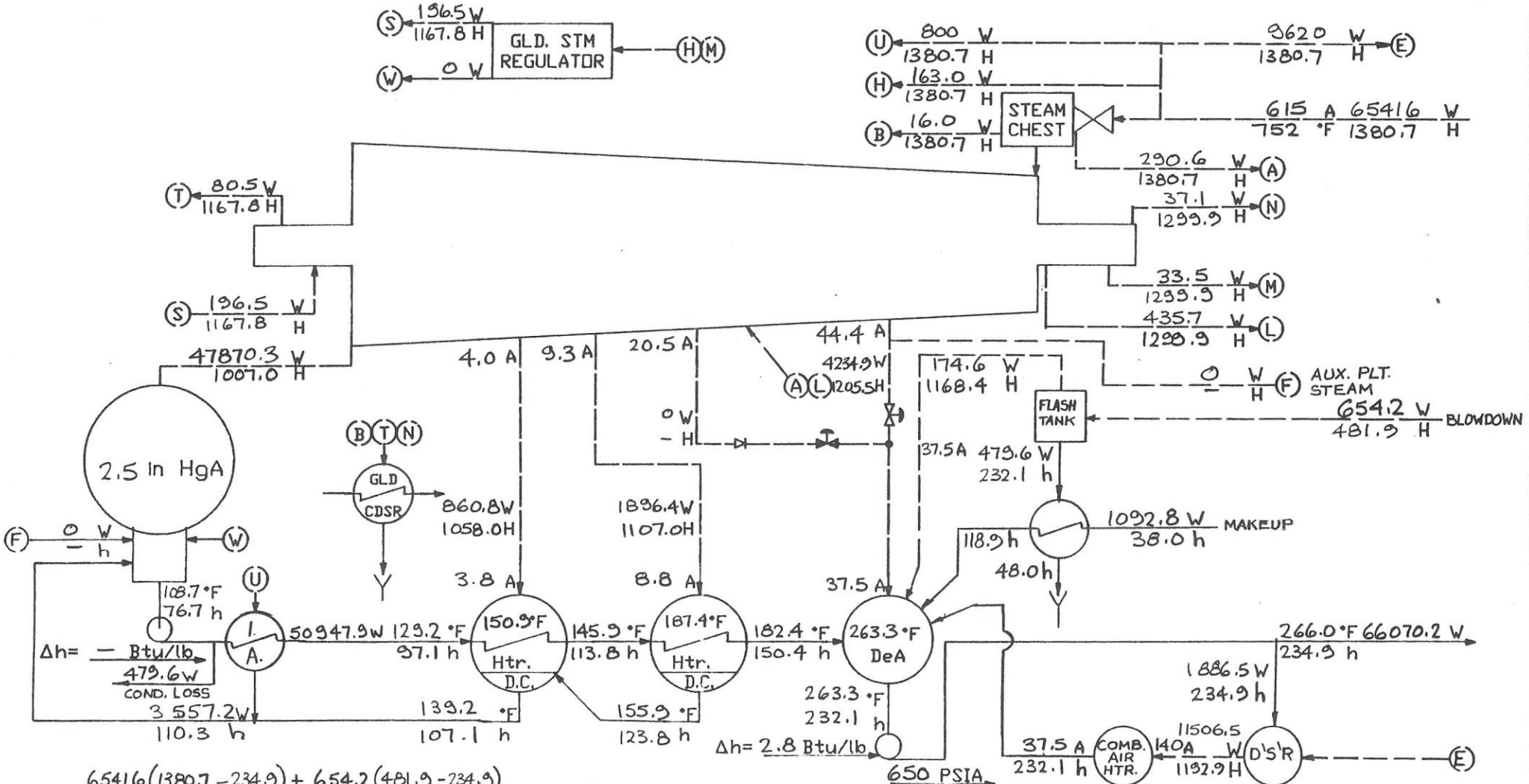

$$65416(1380.7-234.9)+654.2(481.9-234.9)$$

$$\text{HEAT RATE} = \frac{-9620(1380.7-232.1)}{5264} = 12171 \ \frac{\text{BTU}}{\text{kW hr}}$$

(1) CALCULATIONS ARE BASED ON NO RADIATION LOSSES TO HEATERS OR EXTRACTION PIPING.
(2) HEAT RATES ARE BASED ON LOCUS FULL VALVE POINTS.
THROTTLE FLOWS ARE NOT GUARANTEED.
THROTTLE FLOW AT MAXIMUM GUARANTEED LOAD= LB/HR.
THROTTLE FLOW AT MAXIMUM CALCULATED LOAD= LB/HR.
THROTTLE FLOW AT MAXIMUM CALCULATED 5 PERCENT OVERPRESSURE LOAD = LB/HR.

TEF = 1006.6 BTU/LB
ELEP = — BTU/LB
MECH. LOSS= 225 kW
ELEC. LOSS= 200 kW
PF= .9
BFF POWER= 54 kW
BFF EFFY = .85
FRAME M2533A3

NAMEPLATE RATING
13438 kW TURBINE GENERATOR UNIT
600 psig 752 °F 2.5 in HgA
14930 kVA .9 pf 13.8 kV

5264 kW 39 % Rated Load
MIN LOAD + COMB. AIR HTR.

WESTINGHOUSE CANADA INC.
Hamilton Ontario.
ENGR. [illegible]
Date 86/8/20
No. HB-8890-C3
REV 2

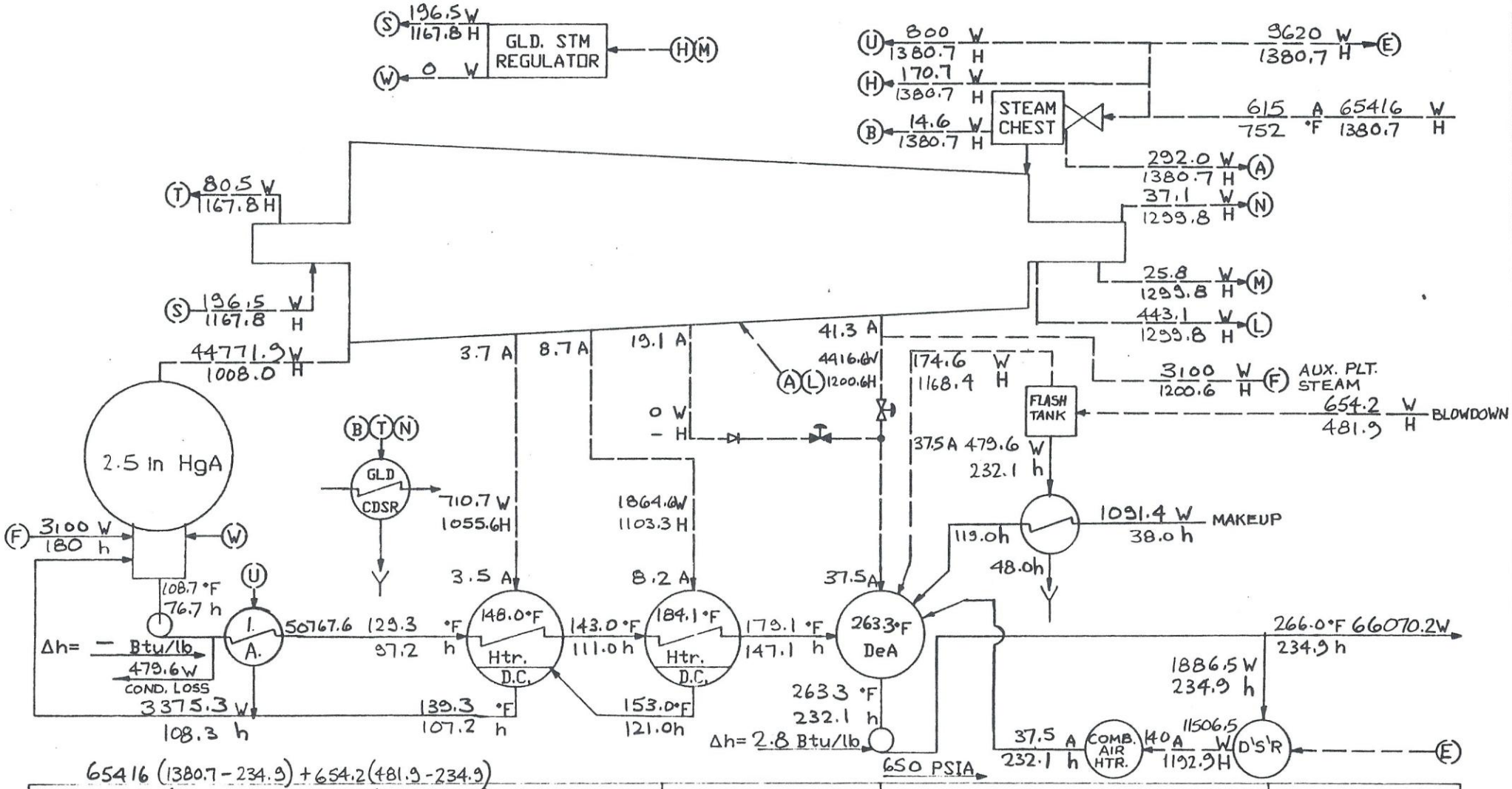

$$\text{HEAT RATE} = \frac{65416(1380.7-234.9)+654.2(481.9-234.9)-9620(1380.7-232.1)-3100(1200.6-180)}{5077} = 11996 \ \frac{\text{BTU}}{\text{kW hr}}$$

(1) CALCULATIONS ARE BASED ON NO RADIATION LOSSES TO HEATERS OR EXTRACTION PIPING.
(2) HEAT RATES ARE BASED ON LOCUS FULL VALVE POINTS.

THROTTLE FLOWS ARE NOT GUARANTEED.
THROTTLE FLOW AT MAXIMUM GUARANTEED LOAD= LB/HR.
THROTTLE FLOW AT MAXIMUM CALCULATED LOAD= LB/HR.
THROTTLE FLOW AT MAXIMUM CALCULATED 5 PERCENT OVERPRESSURE LOAD = LB/HR.

TEF = 1007.6 BTU/LB
ELEP = — BTU/LB
MECH. LOSS= 225 kW
ELEC. LOSS= 199 kW
PF= .9
BFF POWER= 54 kW
BFF EFFY = .85

FRAME M2533 A33

NAMEPLATE RATING

13438 kW TURBINE GENERATOR UNIT
600 psig 752 °F 2.5 in HgA
14930 kVA .8 pf 13.8 kV

5077 kW 38 % Rated Load
MIN LOAD
AUX PLT. STEAM + COMB. AIR HTR.

WESTINGHOUSE CANADA INC.
Hamilton, Ontario.

ENGR. [illegible]
Date 86/8/20

No. HB-8890-C4

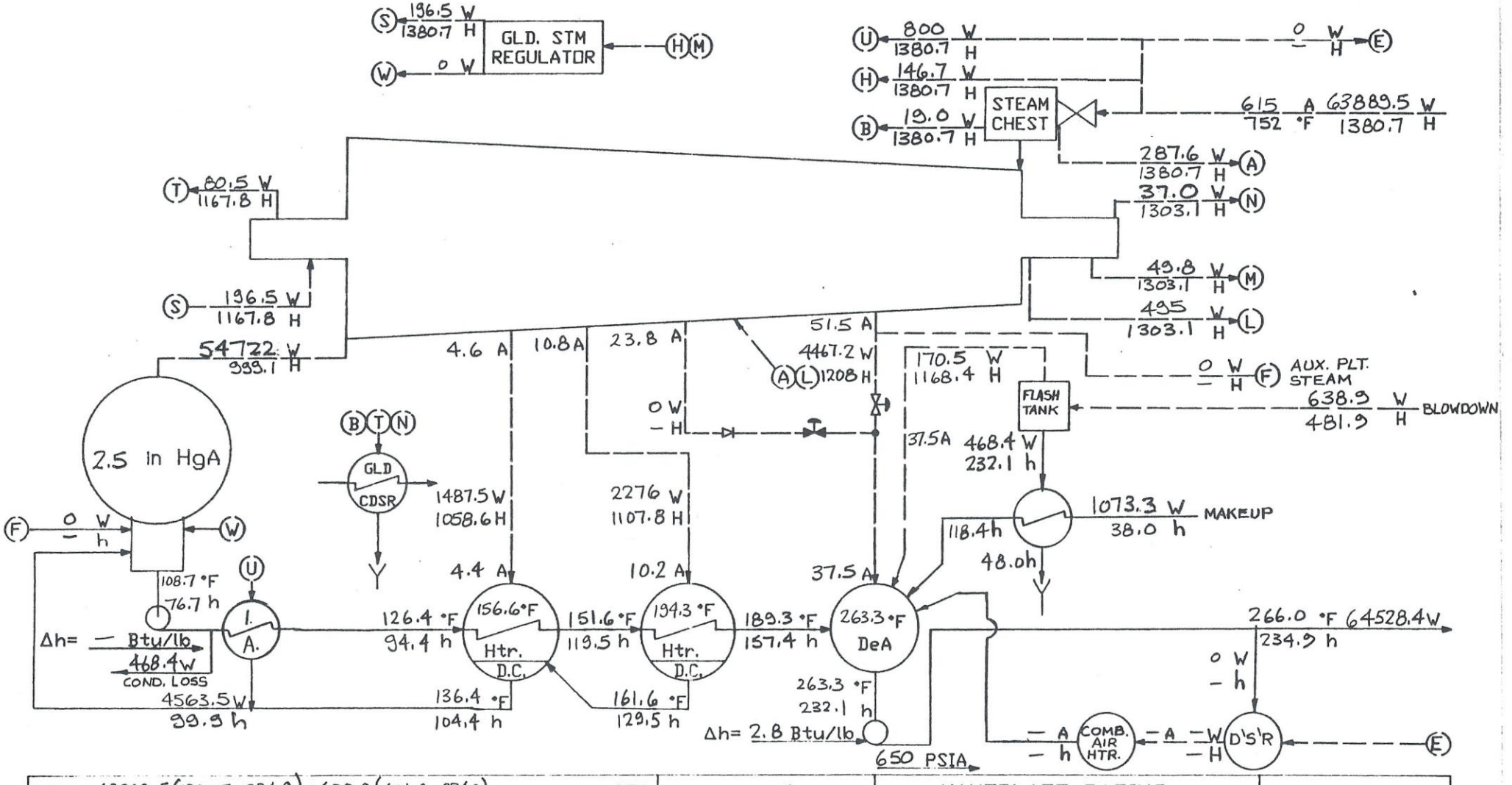

HEAT RATE = $\frac{63889.5(1380.7-234.9)+638.9(481.9-234.9)}{6230} = 11776 \frac{BTU}{kW\ hr}$

(1) CALCULATIONS ARE BASED ON NO RADIATION LOSSES TO HEATERS OR EXTRACTION PIPING.
(2) HEAT RATES ARE BASED ON LOCUS FULL VALVE POINTS.
THROTTLE FLOWS ARE NOT GUARANTEED.
THROTTLE FLOW AT MAXIMUM GUARANTEED LOAD= LB/HR.
THROTTLE FLOW AT MAXIMUM CALCULATED LOAD= LB/HR.
THROTTLE FLOW AT MAXIMUM CALCULATED 5 PERCENT OVERPRESSURE LOAD = LB/HR.

TEF = 998.7 BTU/LB
ELEP = — BTU/LB
MECH. LOSS= 225 kW
ELEC. LOSS= 209 kW
PF= .9
BFF POWER= 52.4 kW
BFF EFFY = .85

FRAME M2533A3

NAMEPLATE RATING
13438 kW TURBINE GENERATOR UNIT
600 psig 752 °F 2.5 In HgA
14930 kVA .9 pf 13.8 kV

6230 kW 46 % Rated Load
ONE BOILER IN OPERATION.

WESTINGHOUSE CANADA INC.
Hamilton, Ontario.
ENGR. [illegible]
Date 86/9/30

No. HB-8890-E1

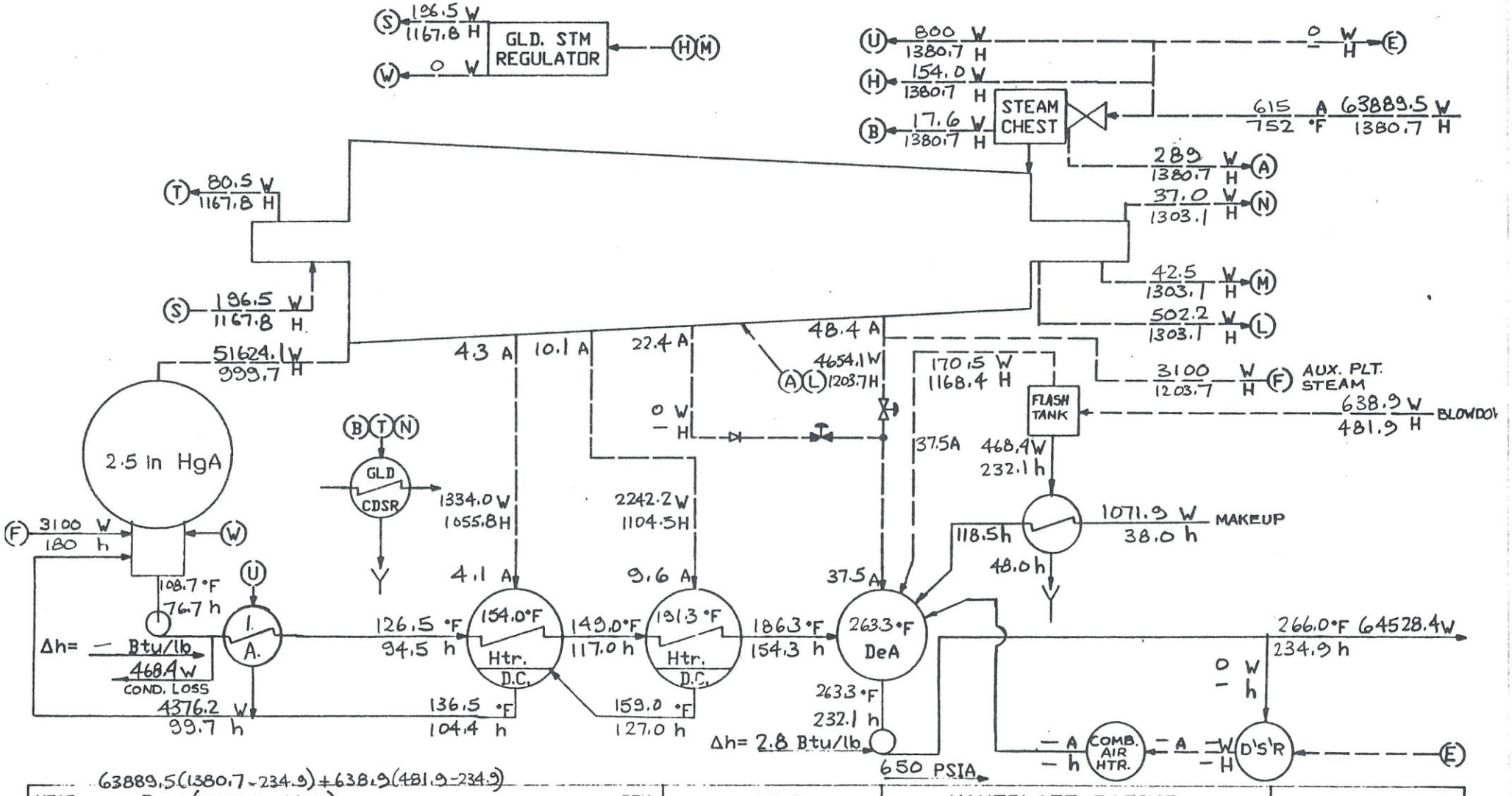

$$\text{HEAT RATE} = \frac{63889.5(1380.7-234.9)+638.9(481.9-234.9) - 3100(1203.7-180.)}{6038} = 11627 \ \frac{\text{BTU}}{\text{kW hr}}$$

(1) CALCULATIONS ARE BASED ON NO RADIATION LOSSES TO HEATERS OR EXTRACTION PIPING.
(2) HEAT RATES ARE BASED ON LOCUS FULL VALVE POINTS.
THROTTLE FLOWS ARE NOT GUARANTEED.
THROTTLE FLOW AT MAXIMUM GUARANTEED LOAD= LB/HR.
THROTTLE FLOW AT MAXIMUM CALCULATED LOAD= LB/HR.
THROTTLE FLOW AT MAXIMUM CALCULATED 5 PERCENT OVERPRESSURE LOAD = LB/HR.

TEF = 999.4 BTU/LB
ELEP = — BTU/LB
MECH. LOSS= 225 kW
ELEC. LOSS= 207 kW
PF= .9
BFP POWER= 52.4 kW
BFP EFFY = .85
FRAME M2533A3

NAMEPLATE RATING
13438 kW TURBINE GENERATOR UNIT
600 psig 752 °F 2.5 in HgA
14930 kVA .9 pf 13.8 kV

6038 kW 45 % Rated Load
ONE BOILER IN OPERATION
AUX. PLT. STEAM

WESTINGHOUSE CANADA INC.
Hamilton, Ontario.
ENGR. [illegible]
Date 86/9/30
No. HB-8890-E2

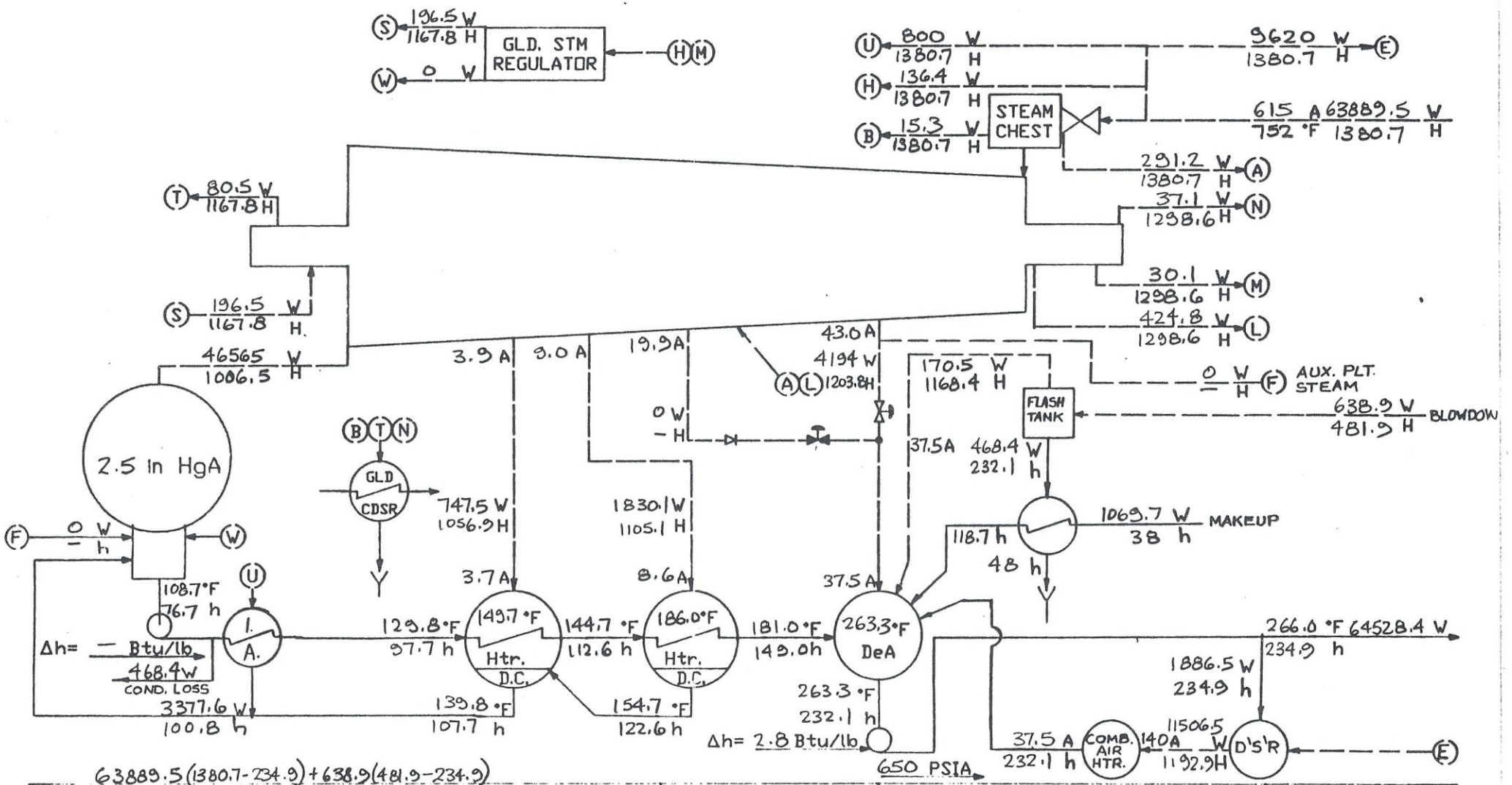

$$\text{HEAT RATE} = \frac{63889.5(1380.7-234.9)+638.9(481.9-234.9)-9620(1380.7-232.1)}{5114} = 12185 \ \frac{\text{BTU}}{\text{kW hr}}$$

(1) CALCULATIONS ARE BASED ON NO RADIATION LOSSES TO HEATERS OR EXTRACTION PIPING.
(2) HEAT RATES ARE BASED ON LOCUS FULL VALVE POINTS.

THROTTLE FLOWS ARE NOT GUARANTEED.
THROTTLE FLOW AT MAXIMUM GUARANTEED LOAD= LB/HR.
THROTTLE FLOW AT MAXIMUM CALCULATED LOAD= LB/HR.
THROTTLE FLOW AT MAXIMUM CALCULATED 5 PERCENT OVERPRESSURE LOAD = LB/HR.

TEF = 1006.1 BTU/LB
ELEP = — BTU/LB
MECH. LOSS= 225 kW
ELEC. LOSS= 199 kW
PF= .9
BFF POWER= 53.9 kW
BFF EFFY = .85

FRAME M2533A3

NAMEPLATE RATING

13438 kW TURBINE GENERATOR UNIT
600 psig 750 °F 2.5 in HgA
14930 kVA .9 pf 13.8 kV

5114 kW 38 % Rated Load
ONE BOILER IN OPERATION
COMB. AIR HTR.

WESTINGHOUSE CANADA INC.
Hamilton, Ontario.

ENGR. [illegible]
Date 86/9/30

No. HB-8890-E3

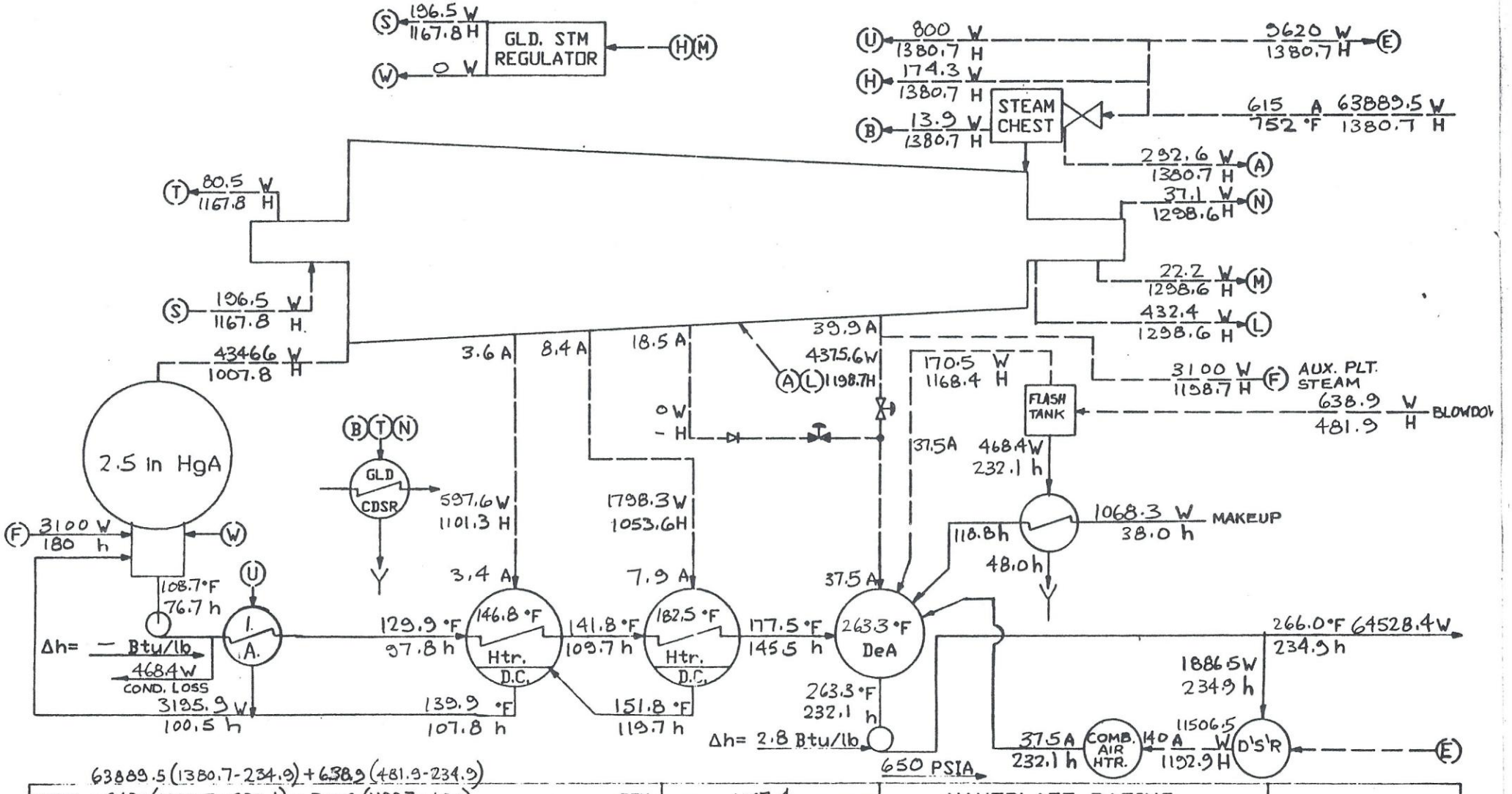

$$\text{HEAT RATE} = \frac{63889.5(1380.7-234.9)+638.9(481.9-234.9)-9620(1380.7-232.1)-3100(1198.7-180)}{4923} = 12016 \ \frac{\text{BTU}}{\text{kW hr}}$$

(1) CALCULATIONS ARE BASED ON NO RADIATION LOSSES TO HEATERS OR EXTRACTION PIPING.
(2) HEAT RATES ARE BASED ON LOCUS FULL VALVE POINTS.
THROTTLE FLOWS ARE NOT GUARANTEED.
THROTTLE FLOW AT MAXIMUM GUARANTEED LOAD= LB/HR.
THROTTLE FLOW AT MAXIMUM CALCULATED LOAD= LB/HR.
THROTTLE FLOW AT MAXIMUM CALCULATED 5 PERCENT OVERPRESSURE LOAD = LB/HR.

TEF = 1007.4 BTU/LB
ELEP = — BTU/LB
MECH. LOSS= 225 kW
ELEC. LOSS= 197 kW
PF= .9
BFP POWER= 53.9 kW
BFP EFFY = .85
FRAME M2533A3

NAMEPLATE RATING
13438 kW TURBINE GENERATOR UNIT
600 psig 752 °F 2.5 in HgA
14930 kVA .9 pf 13.8 kV

4923 kW 37 % Rated Load
ONE BOILER IN OPERATION
AUX PLT. STEAM + COMB. AIR HTR.

WESTINGHOUSE CANADA INC.
Hamilton, Ontario.
ENGR. L. Mackay
Date 86/9/30
No. HB-8890-E4

FORM 827

Westinghouse Canada Inc.

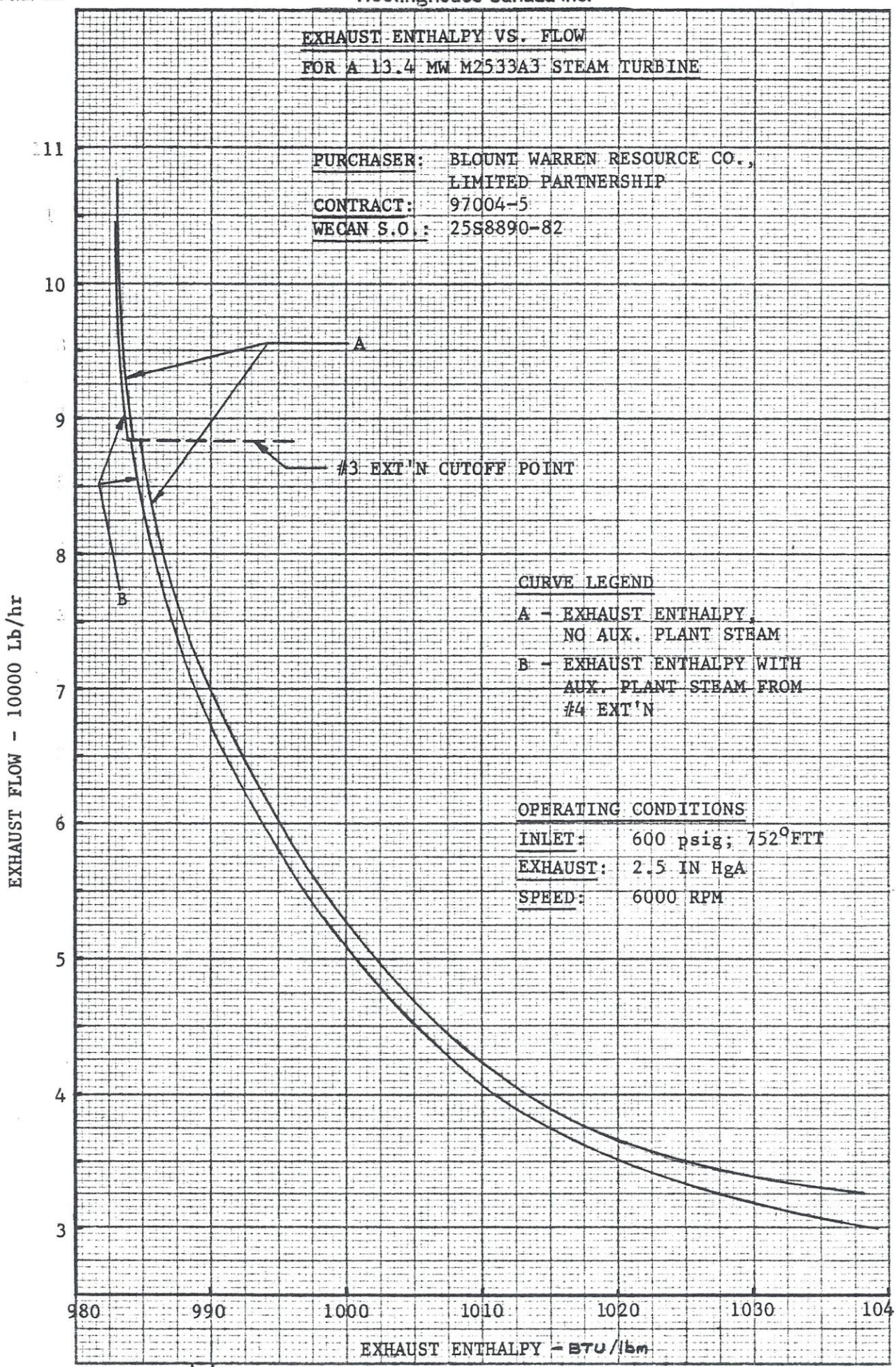

SIGNATURE [signature] DATE 86/7/18 CURVE NO. PC-8890-D1

FORM 827

Westinghouse Canada Inc.

EXTRACTION ENTHALPY VS. DOWNSTREAM FLOW

FOR A 13.4 MW M2533A3 STEAM TURBINE

PURCHASER: BLOUNT WARREN RESOURCE CO., LIMITED PARTNERSHIP

CONTRACT: 97004-5

WECAN S.O.: 25S8890-82

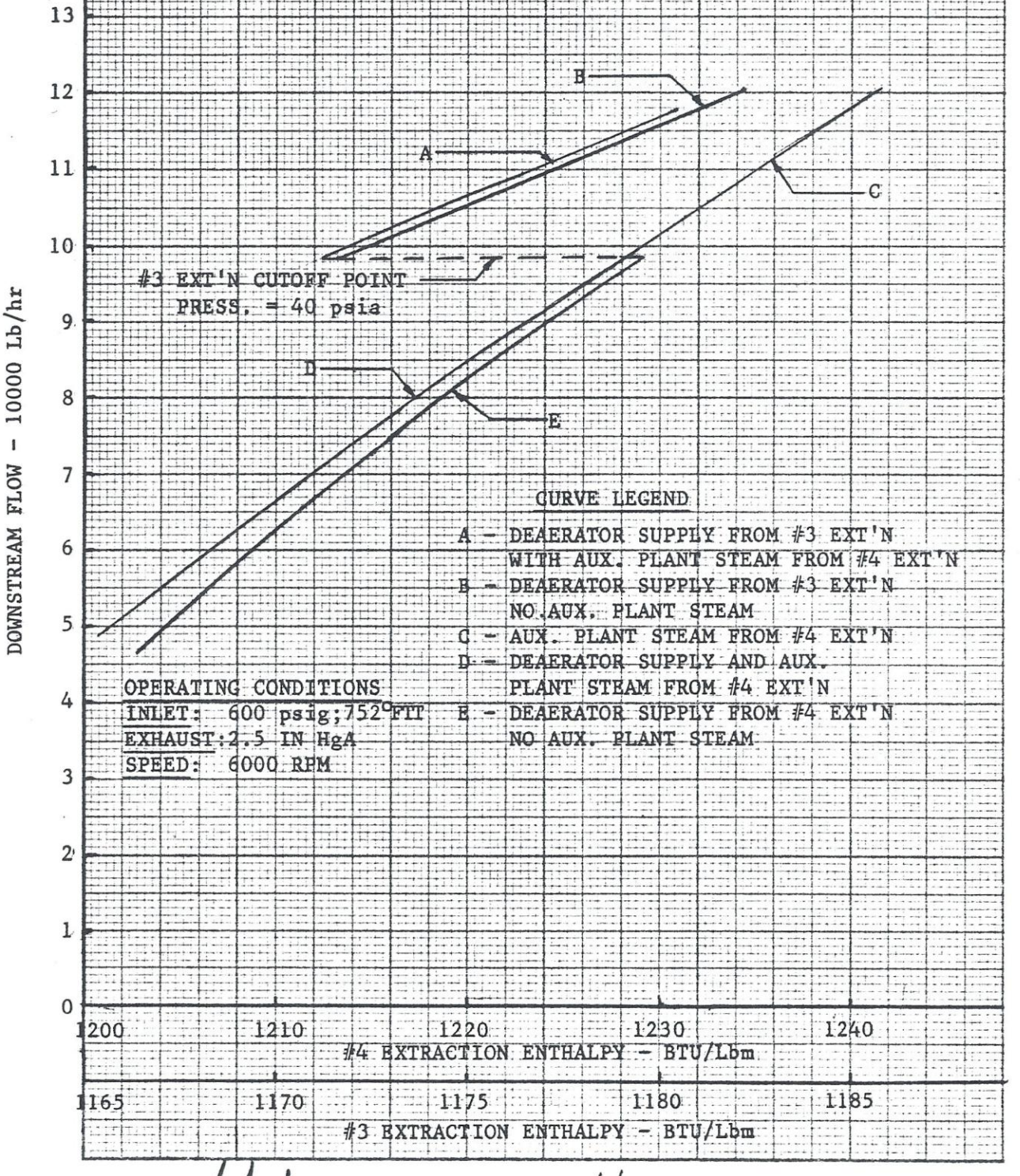

SIGNATURE [signature] DATE 86/7/18 CURVE NO. PC-8890-D2

FORM 827

Westinghouse Canada Inc.

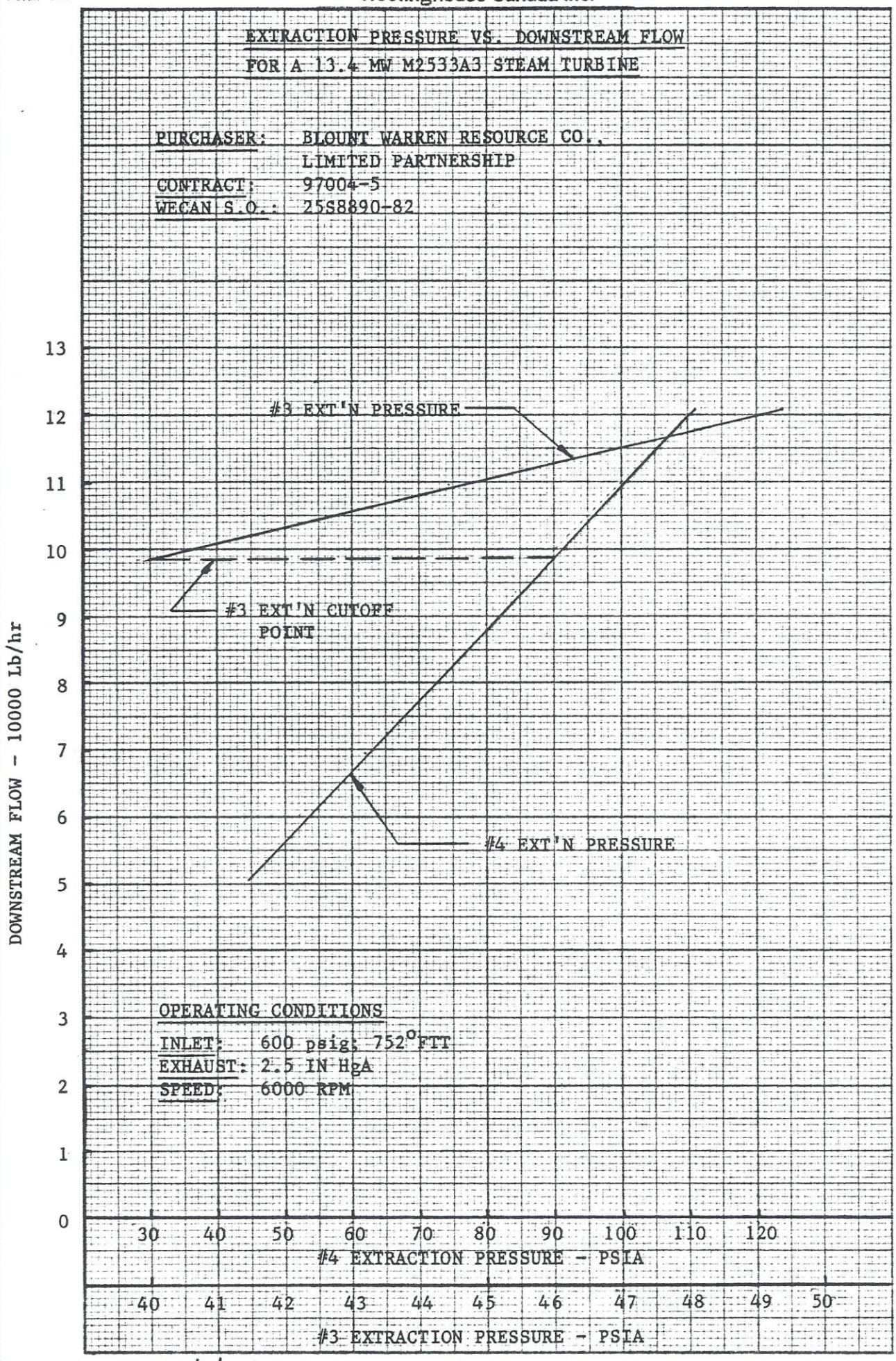

SIGNATURE [signature] DATE 86/7/18 CURVE NO. PC-8890-D3

FORM 827

Westinghouse Canada Inc.

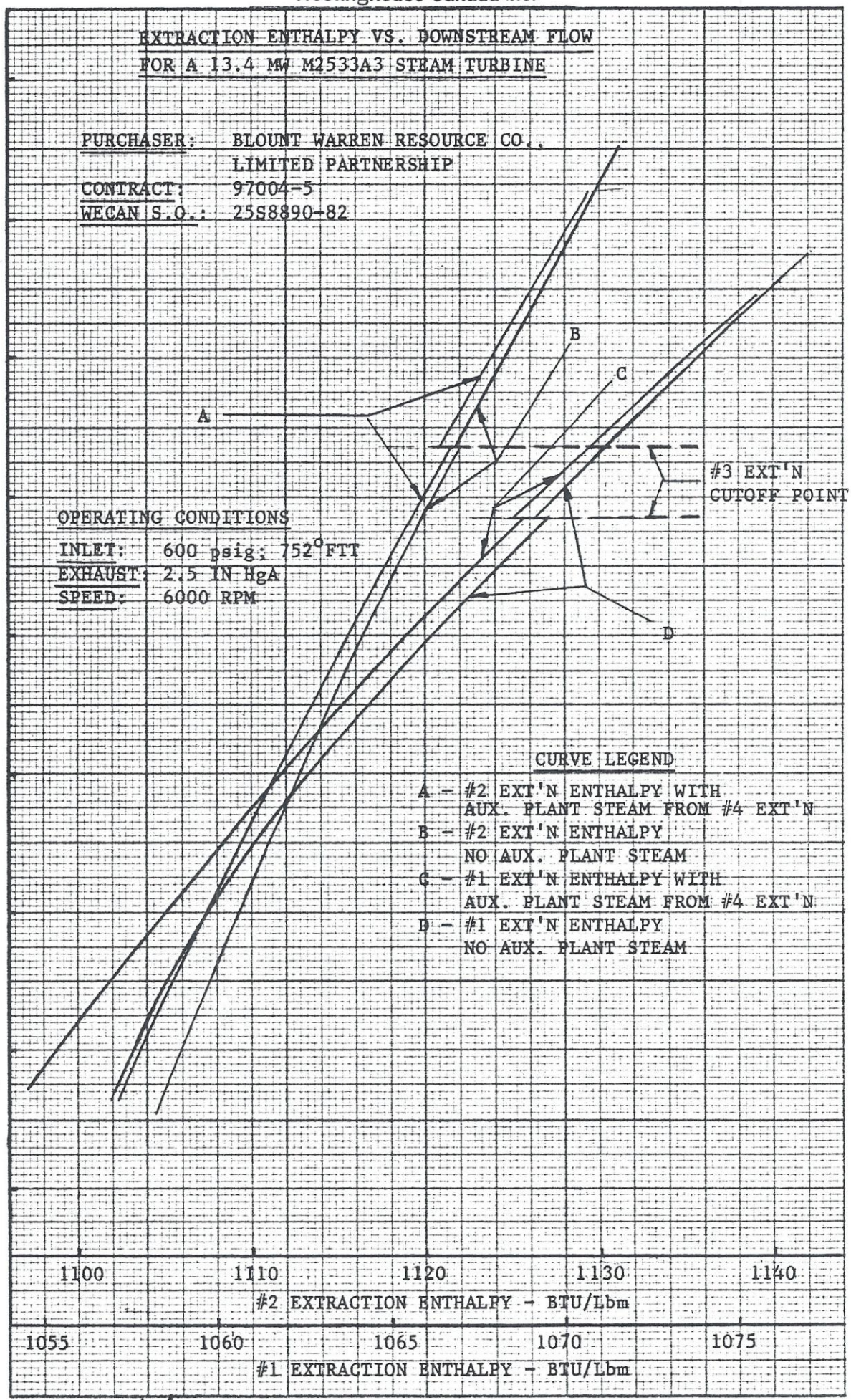

SIGNATURE [signature] DATE 86/7/18 CURVE NO. PC-8890-D4

FORM 827

Westinghouse Canada Inc.

EXTRACTION PRESSURE VS. DOWNSTREAM FLOW
FOR A 13.4 MW M2533A3 STEAM TURBINE

PURCHASER: BLOUNT WARREN RESOURCE CO., LIMITED PARTNERSHIP
CONTRACT: 97004-5
WECAN S.O.: 25S8890-82

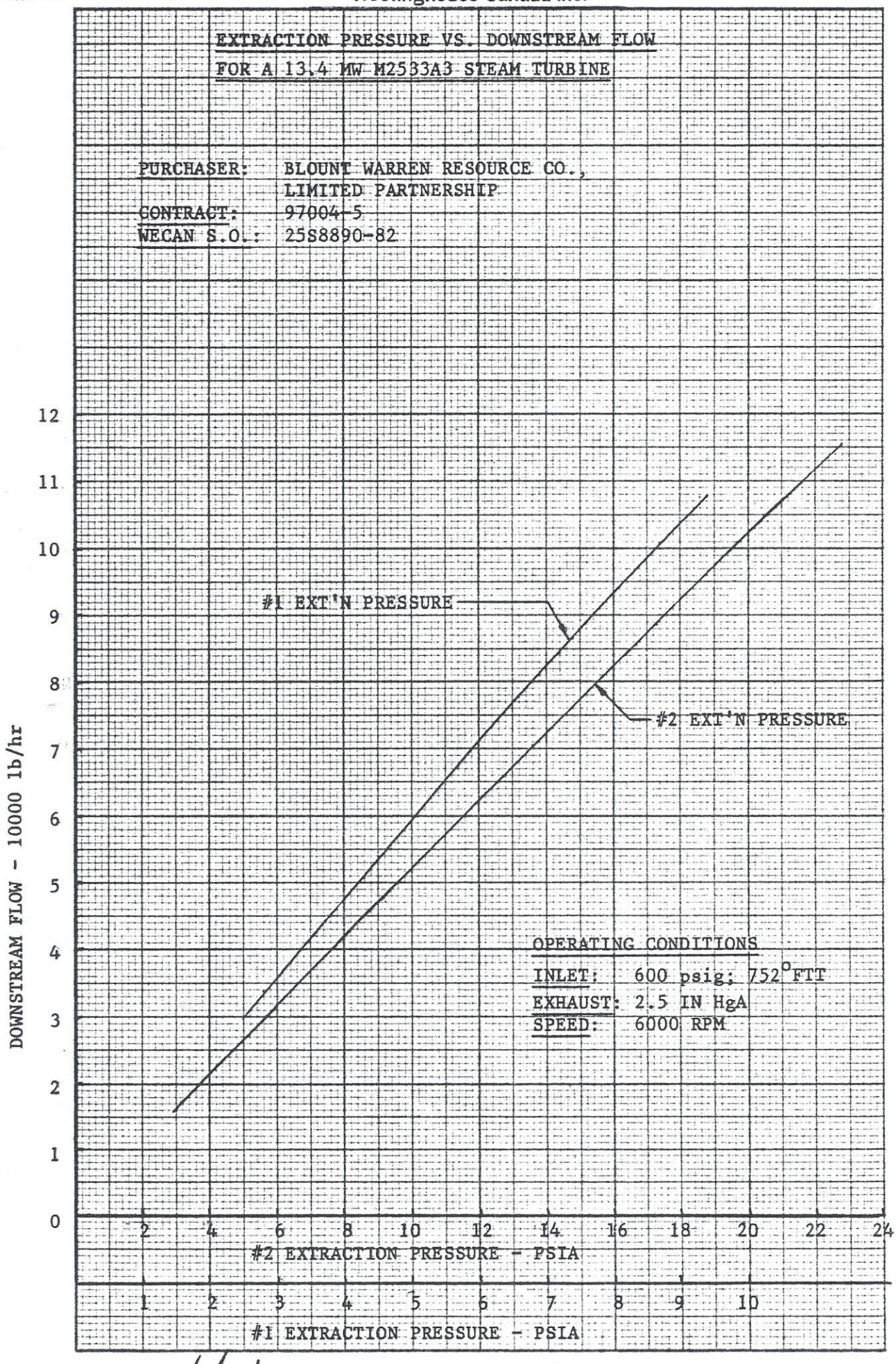

SIGNATURE [signature] DATE 86/7/18 CURVE NO. PC-8890-D5

FORM 827

Westinghouse Canada Inc.

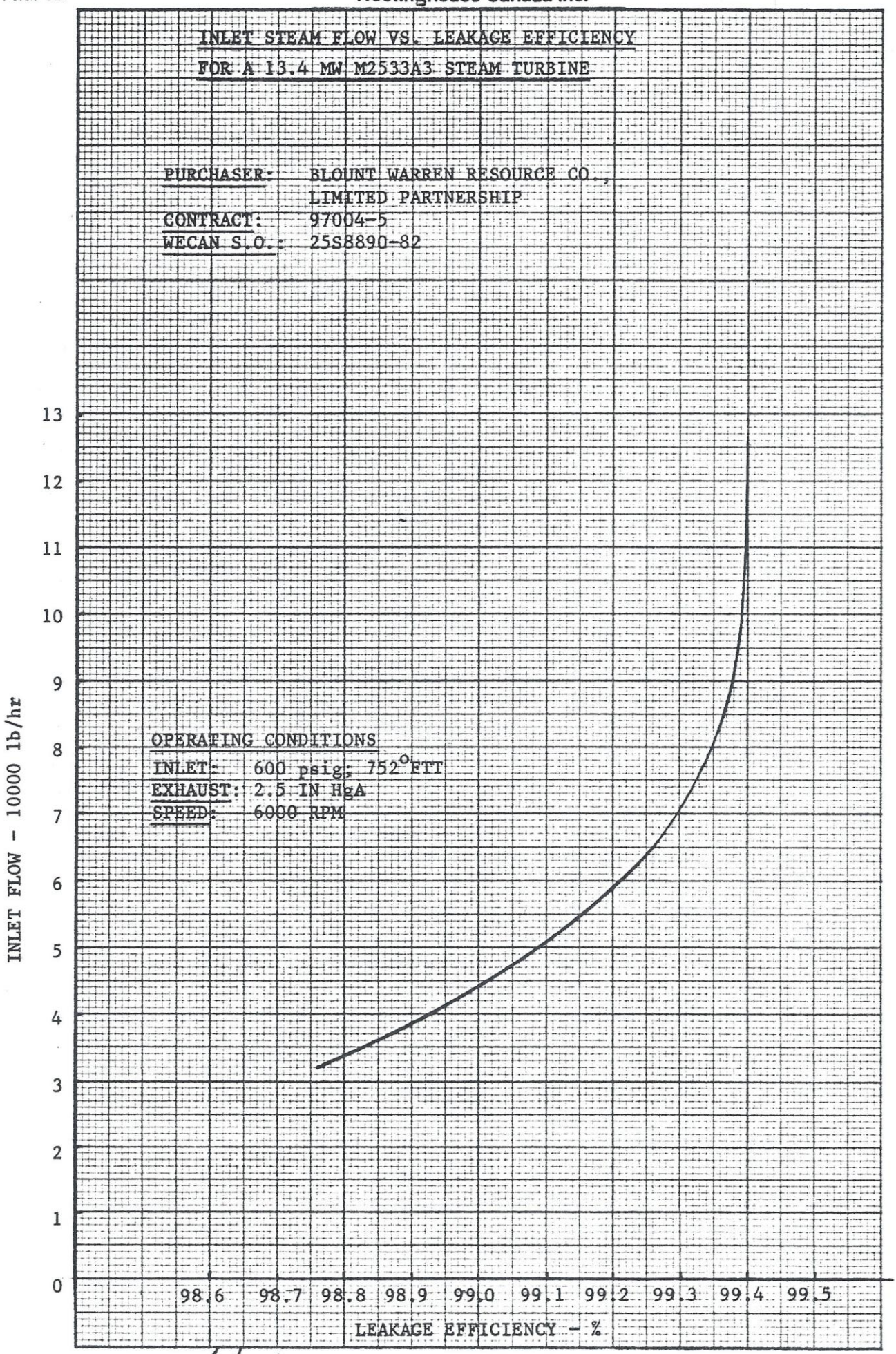

SIGNATURE [signature] DATE 86/7/18 CURVE NO. PC-8890-D6

FORM 827

Westinghouse Canada Inc.

NET POWER VS. ELECTRICAL EFFICIENCY

FOR A BRUSH BSGMHW 118-220/4 GENERATOR

PURCHASER: BLOUNT WARREN RESOURCE CO., LIMITED PARTNERSHIP

CONTRACT: 97004-5

WECAN S.O.: 25S8890-82

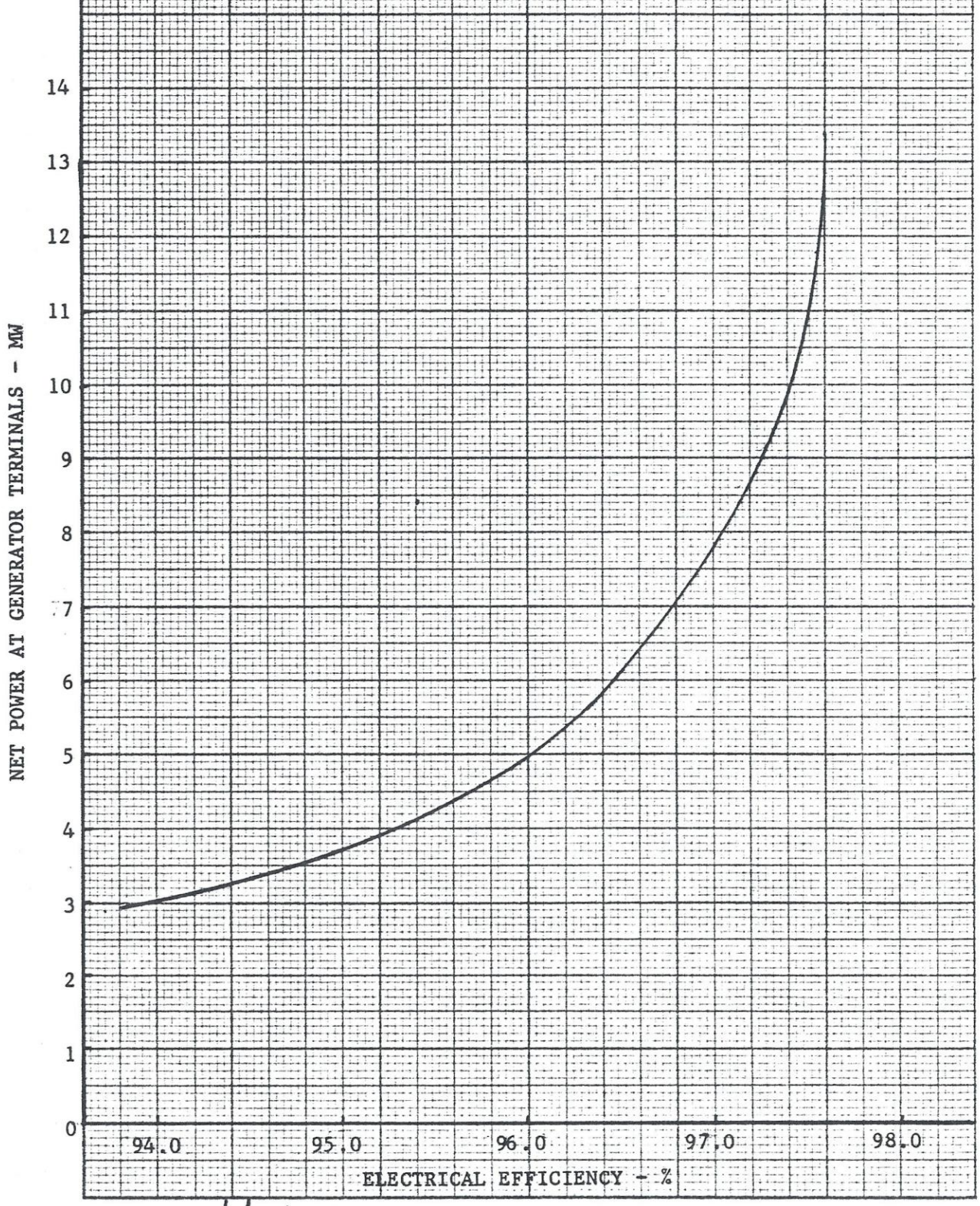

SIGNATURE A. Mackay DATE 86/7/18 CURVE NO. PC-8890-D7

FORM 827

Westinghouse Canada Inc.

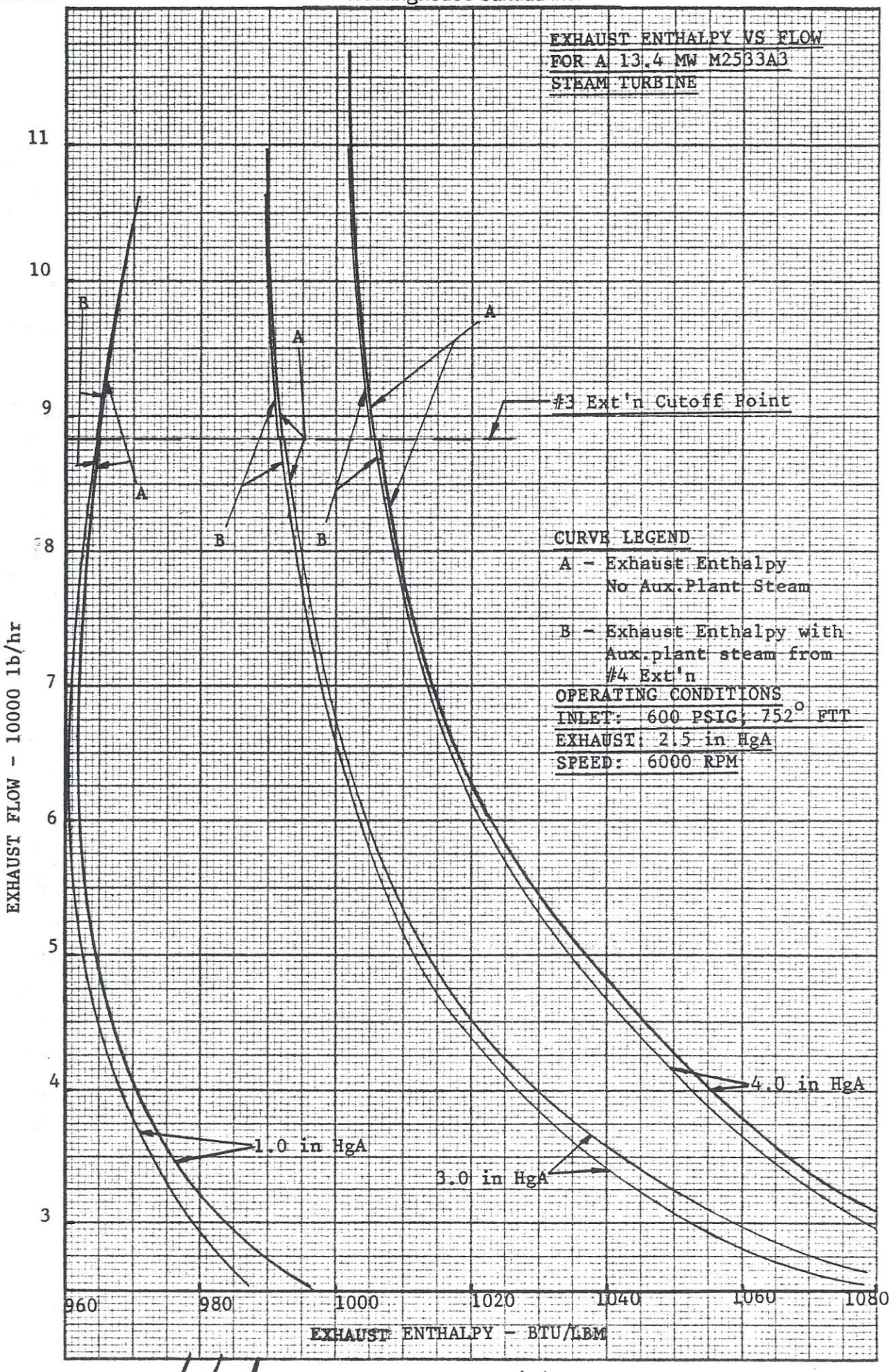

SIGNATURE _____ DATE 86/9/30 CURVE NO. PC-8890-D8