THE DESIGN FIRM

ANITA J. DENSON-ARCHITECT

102 ASHWOOD DRIVE • DECATUR, ALABAMA 35603

CELL: 256-318-4690 • HOME: 256-351-0435

E-MAIL ADDRESS: adenson09@gmail.com

ADDENDUM #1

GYMNASIUM/FELLOWSHIP HALL ADDITION FOR
UNION HILL CUMBERLAND PRESBYTERIAN CHURCH IN AMERICA
3126 NEVEL DRIVE
HUNTSVILLE, AL. 35810

SEPTEMBER 18, 2017

THE FOLLOWING ADDENDUM AS PREPARED BY THE DESIGN FIRM ON THE PROJECT IS HEREBY MADE A PART OF THE DRAWINGS DATED 9/5/17 (ELECTRICAL DRAWINGS WERE DATED 7/31/17):

CHANGES AND CLARIFICATIONS TO THE DRAWINGS TO ELECTRICAL DRAWINGS:

E2 & E3 SEE REVISIONS ON E2 AND E3 SHOWING A 600 AMP SERVICE FOR THE ADDITION. THE CALCULATION SHEET AND HUNTSVILLE UTILITIES LOAD INFORMATION SHEET ARE ALSO ATTACHED AND INCLUDED IN THIS ADDENDUM.

Anita J. Denson

ANITA J. DENSON, ARCHITECT AL. REG. NO. 3519

STATE OF ALABAMA
ANITA JOHNSON DENSON
3519
Anita J. Denson
9/18/17
REGISTERED ARCHITECT

10/23/17 Note: The drawings in this addendum were voided by Addendum 2. The drawings for those sheets are included in the 10/23/17 full set of drawings that was submitted with Addendum 3.

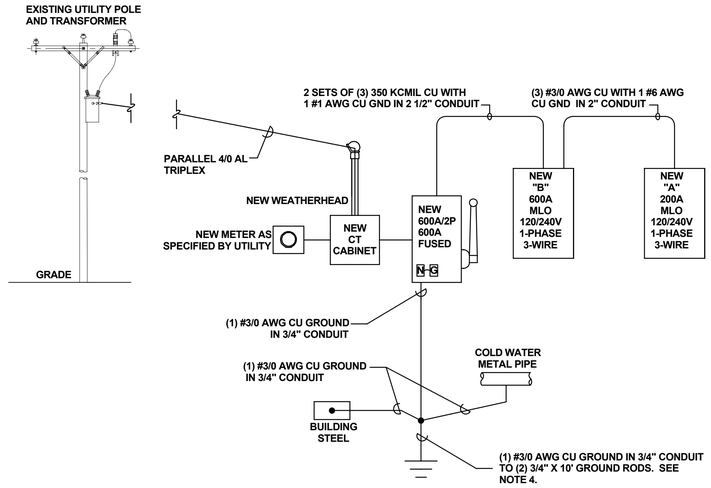

RISER DIAGRAM

NOT TO SCALE

POWER RISER DIAGRAM NOTES:

1. METER BASE SPECIFIED BY UTILITY COMPANY AND INSTALLED BY CONTRACTOR. GROUND METER BASE IN ACCORDANCE WITH UTILITY COMPANY REQUIREMENTS. CONTRACTOR SHALL PROVIDE ALL COMPONENTS REQUIRED BY THE UTILITY COMPANY.
2. ARRANGE WITH THE LOCAL UTILITY COMPANY FOR A 600 AMP, 120/240 VOLT, SINGLE PHASE, THREE WIRE ELECTRICAL SERVICE TO BE BROUGHT TO THE BUILDING, AND COORDINATE COMPLETE REQUIREMENTS FOR CONNECTION TO UTILITY POWER PRIOR TO PURCHASE FABRICATIONS AND INSTALLATION OF SERVICE EQUIPMENT AND WIRING. VERIFY WITH UTILITY COMPANY THAT LOCATIONS, ARRANGEMENT, UTILITY COMPANY VOLTAGE, PHASE, METERING REQUIRED, AND CONNECTIONS TO UTILITY SERVICE ARE IN ACCORDANCE WITH THEIR REGULATIONS AND REQUIREMENTS. IF THEIR REQUIREMENTS ARE AT A VARIANCE WITH THESE DRAWINGS, CONTRACTOR SHALL INCLUDE ALL COSTS NECESSARY TO MEET THE UTILITY REQUIREMENTS WITHOUT EXTRA COST TO THE OWNER AFTER BIDS ARE ACCEPTED.
3. PROVIDE AND INSTALL CT ENCLOSURE AND NEW METER AS SPECIFIED BY THE UTILITY COMPANY. METER SHALL BE PROVIDED BY UTILITY COMPANY AND INSTALLED BY CONTRACTOR.
4. PROVIDE TWO (2) 3/4" X 10' GROUND RODS 20 FT APART. BOND EACH GROUND ROD TOGETHER WITH #3/0 AWG CU. ALL BELOW GRADE GROUND CONNECTIONS TO BE BY EXOTHERMIC WELD.

A

FIXTURE SCHEDULE

FIXTURE DESIGNATION	FIXTURE	LAMP			VOLTAGE	MOUNTING	REMARKS
	TYPE OR EQUIV	TYPE	NO.	DESCRIPTION			
A	EATON - METALUX 24GR-LD4-48-F1-UNV-L840-CD1-U	LED	_	4800 LM / 85 CRI / 4000K	120V	RECESSED	RECESSED LENSED TROFFER, LED TYPE
B	EATON - METALUX 24GR-LD4-38-F1-UNV-L840-CD1-U	LED	_	3800 LM / 85 CRI / 4000K	120V	RECESSED	RECESSED LENSED TROFFER, LED TYPE
D	LITHONIA IBZ 6 32	FL	6	F32T8/2900 LM	120V	SURFACE	HIGH BAY FLOURESCENT
EM	LITHONIA ELM2 LED	LED	2	1.5W WHITE LED	120V	WALL 7'-6"	TWO LAMP HEAD LED EMERGENCY LIGHTING UNIT
EX	LITHONIA LHQM LED R	LED	2	1.5W WHITE LED	120V	WALL 7'-6"	EXIT SIGN / TWO LAMP HEAD LED EMERGENCY LIGHTING COMBINATION UNIT
EX1	LITHONIA LQM S W 1 R 120	LED	1	LED	120V	WALL 7'-6"	SINGLE FACE EXIT SIGN, SUPPLIED WITH EMERGENCY BATTERY
T3	EATON - LUMARK PRVS-A40-UNV-T3	LED	1	15205LM / 4000K / 70 CRI TYPE III OPTICS	120V	POLE 27'-0" 25' POLE 2' CONCRETE BASE	PREVAIL AREA AND ROADWAY LUMINARE (2) 70 CRI, 4000K LEDS AND TYPE III OPTICS, BRONZE PAINTED FINISH
T4	EATON - LUMARK PRVS-A40-UNV-T4	LED	1	15159 LM / 4000K / 70 CRI TYPE IV OPTICS	120V	POLE 27'-0" 25' POLE 2' CONCRETE BASE	PREVAIL AREA AND ROADWAY LUMINARE (2) 70 CRI, 4000K LEDS AND TYPE IV OPTICS, BRONZE PAINTED FINISH
T5	EATON - LUMARK PRVS-A40-UNV-T5	LED	1	15700 LM / 4000K / 70 CRI TYPE V OPTICS	120V	POLE 27'-0" 25' POLE 2' CONCRETE BASE	PREVAIL AREA AND ROADWAY LUMINARE (2) 70 CRI, 4000K LEDS AND TYPE V OPTICS, BRONZE PAINTED FINISH
P	LITHONIA OLCFM 15 DBB	LED	1	1077LM / 4000K / 16.6 WATTS	120V	SURFACE	GENERAL PURPOSE LED CAST FLUSH MOUNT WITH DARK BRONZE FINISH
W	LITHONIA TWP LED 10C 700 40K T3M MVOLT	LED	1	2183 LM / 4000K / 26 WATTS	120V	WALL 7'-0"	LED WALL PACK WITH 10 LEDS, @700MA, 4000K, AND TYPE 3 MEDIUM OPTICS
WD	EATON - ALL-PRO FE0650LPC2	LED	1	760LM / 4700K / 11.3 WATTS	120V	WALL 6'-0"	LED WHITE JELLY JAR WALL SCONCE WITH A ONE PERCENT DIFFUSE LONG LENS
X	LITHONIA AFN W EXT	XENON	2	6 WATT XENON	120V	WALL	ARCHITECTURAL EMERGENCY LIGHTING UNIT

HVAC & PLUMBING EQUIPMENT ELECTRICAL SCHEDULE

EQUIPMENT MARK	EQUIPMENT NAME	VOLTAGE	PHASE	EQUIPMENT DISCONNECT	CONDUCTORS NUMBER/SIZE	EQUIPMENT GROUND	CONDUIT SIZE
PKG-1A	PACKAGE UNIT	230	1	100/2/NF/3R	3 / #2	8	1 1/4
PKG-1B	PACKAGE UNIT	230	1	100/2/NF/3R	3 / #2	8	1 1/4
PKG-1C	PACKAGE UNIT	230	1	100/2/NF/3R	3 / #2	8	1 1/4
PKG-1D	PACKAGE UNIT	230	1	100/2/NF/3R	3 / #2	8	1 1/4
PKG-2	PACKAGE UNIT	230	1	100/2/NF/3R	3 / #2	8	1 1/4
FU-1	FURNACE UNIT	120	1	30/1/NF/3R	2 / #12	12	3/4
FU-2	FURNACE UNIT	120	1	30/1/NF/3R	2 / #12	12	3/4
C-1	CONDENSING UNIT	230	1	60/2/NF/3R	3 / #8	10	3/4
C-2	CONDENSING UNIT	230	1	60/2/NF/3R	3 / #8	10	3/4

* CB = CIRCUIT BREAKER SERVES AS DISCONNECT; REC = PLUG AND RECEPTACLE SERVE AS DISCONNECT SWITCH

DISCONNECT SWITCH NOMENCLATURE A /B / C / D; WHERE A = SIZE IN AMPS, B = NUMBER OF POLES, C = FUSED (F) OR NON-FUSED (NF), D = NEMA RATING

HVAC & PLUMBING ELECTRICAL SCHEDULE IS BASED ON THE UNITS PROVIDED IN THE MECHANICAL DRAWINGS. CONTRACTOR SHALL VERIFY THE UNITS PURCHASED BY THE MECHANICAL CONTRACTOR MATCH THESE PLANS. IF DIFFERENT UNITS ARE PURCHASED, THE CONTRACTOR SHALL PROVIDE OVERCURRENT PROTECTION AND BRANCH CIRCUITS PER MANUFACTURER'S INSTALLATION INSTRUCTIONS AND NEC.

PANELBOARD **A** LOCATION: **JAN RM 108** MAIN: **200 A** VOLTAGE: **120/240 VOLTS**
SUPPLIED FROM: **UTILITY** FEED: **TOP** MAIN CKT BKR: **MLO** PHASE: **1**
MOUNTED: **SURFACE** ASYM A.I.C MIN.: **22 K** WIRE: **3**

A

LOAD SERVED	NO. POLES	TRIP AMPS	WIRE SIZE	VA/ PHASE A	VA/ PHASE B	CKT NO.	CKT NO.	VA/ PHASE A	VA/ PHASE B	WIRE SIZE	TRIP AMPS	NO. POLES	LOAD SERVED
L-105-108,110,112	1	20	12	1812		1	2	1351		12	20	1	L-101-103,112-116
L-111	1	20	12		1077	3	4		1154	12	20	1	L-111
L-109,111, DRIVE THRU	1	20	12	1491		5	6	540		12	20	1	R-116
R-116	1	20	12		540	7	8		1440	12	20	1	R-111,114,115
R-103,111,114	1	20	12	1440		9	10	900		12	20	1	R-102,104,111,113
R-105,112,113,EXT	1	20	12		1260	11	12		1260	12	20	1	R-105,106
R-106,107,108	1	20	12	1440		13	14	1260		12	20	1	R-105,111,112
R-111 WARMER	1	20	12		1440	15	16		1440	12	20	1	R-111 WARMER
R-111	1	20	12	1080		17	18	360		12	20	1	R-109
R-109 WARMER	1	20	12		900	19	20		600	12	20	1	R-REFRIGERATOR
R-FREEZER	1	20	12	400		21	22	600		12	20	1	R-REFRIGERATOR
R-109 MICROWAVE	1	20	12		900	23	24		540	12	20	1	R-109
R-109	1	20	12	720		25	26	360		12	20	1	R-109 ISLAND
R-101,102,EXT	1	20	12		720	27	28		360	12	20	1	R-109
R-EXT	1	20	12	540		29	30	600		12	20	1	WATER HEATER *
WATER FOUNTAIN	1	20	12		552	31	32		256	12	20	1	WALL PACKS
PARKING LOT LIGHTS	1	20	10	1144		33	34	100		12	20	1	RECIRC. PUMP
GAS RANGE	1	20	12		100	35	36		600	12	20	1	SNACK MACHINE
DRINK MACHINE	1	20	12	600		37	38	600		12	20	1	ICE MACHINE
SPARE	1	20				39	40				20	1	SPARE
SPARE	1	20				41	42				20	1	SPARE
				10667	7489			6671	7650				

ABBREVIATIONS:
R-RECEPTACLE, L-LIGHTS

TOTAL VA PHASE A: 17,337
TOTAL VA PHASE B: 15,139

* PROVIDE CIRCUIT BREAKER WITH THE CAPABILITY OF BEING LOCKED IN THE OPEN POSITION

TOTAL CONNECTED: 32,476

** PROVIDE HEATING, AIR CONDITIONING, REFRIGERATION TYPE CIRCUIT BREAKERS FOR HVAC UNITS

PANELBOARD **B** LOCATION: **JAN RM 108** MAIN: **600 A** VOLTAGE: **120/240 VOLTS**
SUPPLIED FROM: **UTILITY** FEED: **TOP** MAIN CKT BKR: **MLO** PHASE: **1**
MOUNTED: **SURFACE** ASYM A.I.C MIN.: **22 K** WIRE: **3**

A

LOAD SERVED	NO. POLES	TRIP AMPS	WIRE SIZE	VA/ PHASE A	VA/ PHASE B	CKT NO.	CKT NO.	VA/ PHASE A	VA/ PHASE B	WIRE SIZE	TRIP AMPS	NO. POLES	LOAD SERVED
** CONDENSER C-1	2	35	8	2024		1	2	2208		8	40	2	CONDENSER C-2 **
					2024	3	4		2208				
** HVAC PKG-1A	2	80	2	5704		5	6	979		12	15	1	FURNACE FU-1 **
					5704	7	8		1296	12	20	1	FURNACE FU-2 **
** HVAC PKG-1B	2	80	2	5704		9	10	5704		2	80	2	HVAC PKG-1C **
					5704	11	12		5704				
** HVAC PKG-1D	2	80	2	5704		13	14	5704		2	80	2	HVAC PKG-2 **
					5704	15	16		5704				
PANEL A	2	200	3/0	17337		17	18				20	1	SPARE
					15139	19	20				20	1	SPARE
SPARE	1	20				21	22				20	1	SPARE
SPARE	1	20				23	24				20	1	SPARE
						25	26						
						27	28						
						29	30						
						31	32						
						33	34						
						35	36						
						37	38						
						39	40						
						41	42						
				36473	34275			14595	14912				

ABBREVIATIONS:
R-RECEPTACLE, L-LIGHTS

TOTAL VA PHASE A: 51,068
TOTAL VA PHASE B: 49,187

* PROVIDE CIRCUIT BREAKER WITH THE CAPABILITY OF BEING LOCKED IN THE OPEN POSITION

TOTAL CONNECTED: 100,255

** PROVIDE HEATING, AIR CONDITIONING, REFRIGERATION TYPE CIRCUIT BREAKERS FOR HVAC UNITS

REV.	DATE	INITIAL
A	13 SEP 17	ACR

RISER DIAGRAM AND ELECTRICAL SCHEDULES

GYMNASIUM/FELLOWSHIP HALL ADDITION FOR UHCPC

3126 NEVEL DR. HUNTSVILLE, AL. 35810

DESIGN: C. RAMSEY
REVIEWED: C. RAMSEY 256-604-9445
DATE: 31 JULY 2017
SCALE: NONE

ALABAMA REGISTERED No. 27309 PROFESSIONAL ENGINEER 7/31/2017 CHARLIE CLARK RAMSEY, JR.

E-2

SHEET 2 OF 6

HUNTSVILLE UTILITIES ELECTRIC DEPARTMENT
CUSTOMER LOAD INFORMATION

Customer Name/Business Name: Union Hill Cumberland Presbyterian Church

Service Address: _____

Telephone Number: _____

Mailing Address: _____

Size of Service Requested: 600 AMPS

Type of Service Requested: Three Ø: _____ Single Ø: X

Secondary Voltage Required: 120/240 Volts

Building Square Feet: 10,953 Addition

Hours of Operation: _____

Heating: Gas: X Electric: _____

NOTE: *An engineering plot plan must be furnished to Huntsville Utilities Engineering Services (including property boundaries, building location, parking area, dimensions, etc.)*

LOAD INFORMATION

Estimated kW (Kilowatts): _____

Total Connected Load: 100,255 VA

Individual Loads: (Heating/Cooling, Lighting, Machinery, Appliances, Outlets, Computers, Water Heaters, etc.)

Note: Three-Phase Items to be listed separately.

ITEM			
Interior Lighting	=	6.9	kW
Receptacle Load	=	14.8	kW
Exterior Lighting	=	1.4	kW
Air Handling Units	=	2.3	kW
Outdoor HVAC Units	=	65.5	kW
Kitchen Appliances	=	8.2	kW
Miscellaneous	=	1.2	kW
	=		kW
	=		kW
	=		kW
Total	=	100.3	kW

1 BTU/hour = 0.29 Watts

1 HP = 746 Watts

Signed: _____ Date: _____

NOTE: Please sign and e-mail back to H.U. Representative that sent it to you or fax to (256) 535-1445.

NON-DWELLING LOAD CALCULATIONS

	BUILDING AREA				10953	SQ FT	
	RECEPTACLE LOAD				14.76	KVA	
	FIXED MULTI-OUTLET ASSEMBLIES						
	RECEPTACLE LOAD DEMAND FACTOR			FIRST 10 KVA @ 100%	10	KVA	
				REMAINDER @ 50%	2.38	KVA	
				TOTAL	12.38	KVA	
1	**TOTAL RECEPTACLE LOAD**						**12.38 KVA**
	GENERAL LIGHTING LOAD		1 VA PER SQFT		10.953	KVA	
	SIGN/OUTLINE LIGHTING				0	KVA	
	SHOW/TRACK LIGHTING					KVA	
	EXTERIOR LIGHTING				1.4	KVA	
2	**TOTAL LIGHTING**						**12.4 KVA**
3	**CONTINUOUS LOADS @**	**125%**					**0.0 KVA**
4	**KITCHEN LOADS @**	**65%**	**HUNTSVILLE UTILITIES**				**5.3 KVA**
5	**OTHER LOADS**						**3.5 KVA**
6	**MOTOR LOADS**						**54.1 KVA**
7	**LARGEST MOTOR @**	**125%**					**14.3 KVA**

	TOTAL SERVICE LOAD	**102 KVA**
102 KVA / 240 Volts	=	425 A
	SERVICE LOAD	425 A
	FUTURE & SPARE	0 %
		425 A
	MINIMUM SERVICE OVERCURRENT REQUIRED	**600 A**
	MINIMUM SERVICE SIZE REQUIRED	**600 A**

THE DESIGN FIRM

ANITA J. DENSON-ARCHITECT

102 ASHWOOD DRIVE • DECATUR, ALABAMA 35603

CELL: 256-318-4690 • HOME: 256-351-0435

E-MAIL ADDRESS: adenson09@gmail.com

ADDENDUM #2

GYMNASIUM/FELLOWSHIP HALL ADDITION FOR
UNION HILL CUMBERLAND PRESBYTERIAN CHURCH IN AMERICA
3126 NEVEL DRIVE
HUNTSVILLE, AL. 35810

OCTOBER 4, 2017

THE FOLLOWING ADDENDUM AS PREPARED BY THE DESIGN FIRM ON THE PROJECT IS HEREBY MADE A PART OF THE DRAWINGS DATED 9/5/17 (ELECTRICAL DRAWINGS WERE DATED 7/31/17):

CHANGES AND CLARIFICATIONS TO THE DRAWINGS TO ELECTRICAL DRAWINGS:

E2, E3 & E5	SEE REVISIONS ON E2, E3 & E5 SHOWING TRANSFORMER AND UNDERGROUND SERVICE AS COORDINATED WITH HUNTSVILLE UTILITIES.

Anita J. Denson

ANITA J. DENSON, ARCHITECT AL. REG. NO. 3519

STATE OF ALABAMA
ANITA JOHNSON DENSON
3519
Anita J. Denson
10/4/17
REGISTERED ARCHITECT

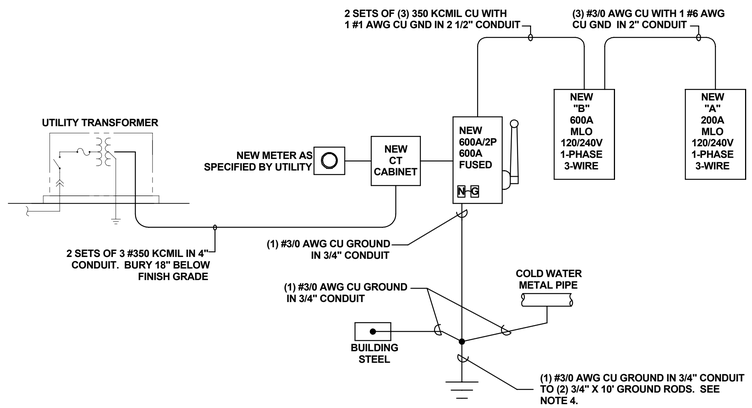

RISER DIAGRAM

NOT TO SCALE

POWER RISER DIAGRAM NOTES:

1. METER BASE SPECIFIED BY UTILITY COMPANY AND INSTALLED BY CONTRACTOR. GROUND METER BASE IN ACCORDANCE WITH UTILITY COMPANY REQUIREMENTS. CONTRACTOR SHALL PROVIDE ALL COMPONENTS REQUIRED BY THE UTILITY COMPANY.
2. ARRANGE WITH THE LOCAL UTILITY COMPANY FOR A 600 AMP, 120/240 VOLT, SINGLE PHASE, THREE WIRE ELECTRICAL SERVICE TO BE BROUGHT TO THE BUILDING, AND COORDINATE COMPLETE REQUIREMENTS FOR CONNECTION TO UTILITY POWER PRIOR TO PURCHASE FABRICATIONS AND INSTALLATION OF SERVICE EQUIPMENT AND WIRING. VERIFY WITH UTILITY COMPANY THAT LOCATIONS, ARRANGEMENT, UTILITY COMPANY VOLTAGE, PHASE, METERING REQUIRED, AND CONNECTIONS TO UTILITY SERVICE ARE IN ACCORDANCE WITH THEIR REGULATIONS AND REQUIREMENTS. IF THEIR REQUIREMENTS ARE AT A VARIANCE WITH THESE DRAWINGS, CONTRACTOR SHALL INCLUDE ALL COSTS NECESSARY TO MEET THE UTILITY REQUIREMENTS WITHOUT EXTRA COST TO THE OWNER AFTER BIDS ARE ACCEPTED.
3. PROVIDE AND INSTALL CT ENCLOSURE AND NEW METER AS SPECIFIED BY THE UTILITY COMPANY. METER SHALL BE PROVIDED BY UTILITY COMPANY AND INSTALLED BY CONTRACTOR.
4. PROVIDE TWO (2) 3/4" X 10' GROUND RODS 20 FT APART. BOND EACH GROUND ROD TOGETHER WITH #3/0 AWG CU. ALL BELOW GRADE GROUND CONNECTIONS TO BE BY EXOTHERMIC WELD.

B

FIXTURE SCHEDULE

FIXTURE DESIGNATION	FIXTURE	LAMP			VOLTAGE	MOUNTING	REMARKS
	TYPE OR EQUIV	TYPE	NO.	DESCRIPTION			
A	EATON - METALUX 24GR-LD4-48-F1-UNV-L840-CD1-U	LED	_	4800 LM / 85 CRI / 4000K	120V	RECESSED	RECESSED LENSED TROFFER, LED TYPE
B	EATON - METALUX 24GR-LD4-38-F1-UNV-L840-CD1-U	LED	_	3800 LM / 85 CRI / 4000K	120V	RECESSED	RECESSED LENSED TROFFER, LED TYPE
D	LITHONIA IBZ 6 32	FL	6	F32T8/2900 LM	120V	SURFACE	HIGH BAY FLOURESCENT
EM	LITHONIA ELM2 LED	LED	2	1.5W WHITE LED	120V	WALL 7'-6"	TWO LAMP HEAD LED EMERGENCY LIGHTING UNIT
EX	LITHONIA LHQM LED R	LED	2	1.5W WHITE LED	120V	WALL 7'-6"	EXIT SIGN / TWO LAMP HEAD LED EMERGENCY LIGHTING COMBINATION UNIT
EX1	LITHONIA LQM S W 1 R 120	LED	1	LED	120V	WALL 7'-6"	SINGLE FACE EXIT SIGN, SUPPLIED WITH EMERGENCY BATTERY
T3	EATON - LUMARK PRVS-A40-UNV-T3	LED	1	15205LM / 4000K / 70 CRI TYPE III OPTICS	120V	POLE 27'-0" 25' POLE 2' CONCRETE BASE	PREVAIL AREA AND ROADWAY LUMINARE (2) 70 CRI, 4000K LEDS AND TYPE III OPTICS, BRONZE PAINTED FINISH
T4	EATON - LUMARK PRVS-A40-UNV-T4	LED	1	15159 LM / 4000K / 70 CRI TYPE IV OPTICS	120V	POLE 27'-0" 25' POLE 2' CONCRETE BASE	PREVAIL AREA AND ROADWAY LUMINARE (2) 70 CRI, 4000K LEDS AND TYPE IV OPTICS, BRONZE PAINTED FINISH
T5	EATON - LUMARK PRVS-A40-UNV-T5	LED	1	15700 LM / 4000K / 70 CRI TYPE V OPTICS	120V	POLE 27'-0" 25' POLE 2' CONCRETE BASE	PREVAIL AREA AND ROADWAY LUMINARE (2) 70 CRI, 4000K LEDS AND TYPE V OPTICS, BRONZE PAINTED FINISH
P	LITHONIA OLCFM 15 DBB	LED	1	1077LM / 4000K / 16.6 WATTS	120V	SURFACE	GENERAL PURPOSE LED CAST FLUSH MOUNT WITH DARK BRONZE FINISH
W	LITHONIA TWP LED 10C 700 40K T3M MVOLT	LED	1	2183 LM / 4000K / 26 WATTS	120V	WALL 7'-0"	LED WALL PACK WITH 10 LEDS, @700MA, 4000K, AND TYPE 3 MEDIUM OPTICS
WD	EATON - ALL-PRO FE0650LPC2	LED	1	760LM / 4700K / 11.3 WATTS	120V	WALL 6'-0"	LED WHITE JELLY JAR WALL SCONCE WITH A ONE PERCENT DIFFUSE LONG LENS
X	LITHONIA AFN W EXT	XENON	2	6 WATT XENON	120V	WALL	ARCHITECTURAL EMERGENCY LIGHTING UNIT

HVAC & PLUMBING EQUIPMENT ELECTRICAL SCHEDULE

EQUIPMENT MARK	EQUIPMENT NAME	VOLTAGE	PHASE	EQUIPMENT DISCONNECT	CONDUCTORS NUMBER/SIZE	EQUIPMENT GROUND	CONDUIT SIZE
PKG-1A	PACKAGE UNIT	230	1	100/2/NF/3R	3 / #2	8	1 1/4
PKG-1B	PACKAGE UNIT	230	1	100/2/NF/3R	3 / #2	8	1 1/4
PKG-1C	PACKAGE UNIT	230	1	100/2/NF/3R	3 / #2	8	1 1/4
PKG-1D	PACKAGE UNIT	230	1	100/2/NF/3R	3 / #2	8	1 1/4
PKG-2	PACKAGE UNIT	230	1	100/2/NF/3R	3 / #2	8	1 1/4
FU-1	FURNACE UNIT	120	1	30/1/NF/3R	2 / #12	12	3/4
FU-2	FURNACE UNIT	120	1	30/1/NF/3R	2 / #12	12	3/4
C-1	CONDENSING UNIT	230	1	60/2/NF/3R	3 / #8	10	3/4
C-2	CONDENSING UNIT	230	1	60/2/NF/3R	3 / #8	10	3/4

* CB = CIRCUIT BREAKER SERVES AS DISCONNECT; REC = PLUG AND RECEPTACLE SERVE AS DISCONNECT SWITCH

DISCONNECT SWITCH NOMENCLATURE A /B / C / D; WHERE A = SIZE IN AMPS, B = NUMBER OF POLES, C = FUSED (F) OR NON-FUSED (NF), D = NEMA RATING

HVAC & PLUMBING ELECTRICAL SCHEDULE IS BASED ON THE UNITS PROVIDED IN THE MECHANICAL DRAWINGS. CONTRACTOR SHALL VERIFY THE UNITS PURCHASED BY THE MECHANICAL CONTRACTOR MATCH THESE PLANS. IF DIFFERENT UNITS ARE PURCHASED, THE CONTRACTOR SHALL PROVIDE OVERCURRENT PROTECTION AND BRANCH CIRCUITS PER MANUFACTURER'S INSTALLATION INSTRUCTIONS AND NEC.

PANELBOARD **A** LOCATION: **JAN RM 108** MAIN: **200 A** VOLTAGE: **120/240 VOLTS**
SUPPLIED FROM: **UTILITY** FEED: **TOP** MAIN CKT BKR: **MLO** PHASE: **1**
MOUNTED: **SURFACE** ASYM A.I.C MIN.: **22 K** WIRE: **3**

LOAD SERVED	NO. POLES	TRIP AMPS	WIRE SIZE	VA/ PHASE A	VA/ PHASE B	CKT NO.	CKT NO.	VA/ PHASE A	VA/ PHASE B	WIRE SIZE	TRIP AMPS	NO. POLES	LOAD SERVED
L-105-108,110,112	1	20	12	1812		1	2	1351		12	20	1	L-101-103,112-116
L-111	1	20	12		1077	3	4		1154	12	20	1	L-111
L-109,111, DRIVE THRU	1	20	12	1491		5	6	540		12	20	1	R-116
R-116	1	20	12		540	7	8		1440	12	20	1	R-111,114,115
R-103,111,114	1	20	12	1440		9	10	900		12	20	1	R-102,104,111,113
R-105,112,113,EXT	1	20	12		1260	11	12		1260	12	20	1	R-105,106
R-106,107,108	1	20	12	1440		13	14	1260		12	20	1	R-105,111,112
R-111 WARMER	1	20	12		1440	15	16		1440	12	20	1	R-111 WARMER
R-111	1	20	12	1080		17	18	360		12	20	1	R-109
R-109 WARMER	1	20	12		900	19	20		600	12	20	1	R-REFRIGERATOR
R-FREEZER	1	20	12	400		21	22	600		12	20	1	R-REFRIGERATOR
R-109 MICROWAVE	1	20	12		900	23	24		540	12	20	1	R-109
R-109	1	20	12	720		25	26	360		12	20	1	R-109 ISLAND
R-101,102,EXT	1	20	12		720	27	28		360	12	20	1	R-109
R-EXT	1	20	12	540		29	30	600		12	20	1	WATER HEATER *
WATER FOUNTAIN	1	20	12		552	31	32		256	12	20	1	WALL PACKS
PARKING LOT LIGHTS	1	20	10	1144		33	34	100		12	20	1	RECIRC. PUMP
GAS RANGE	1	20	12		100	35	36		600	12	20	1	SNACK MACHINE
DRINK MACHINE	1	20	12	600		37	38	600		12	20	1	ICE MACHINE
SPARE	1	20				39	40				20	1	SPARE
SPARE	1	20				41	42				20	1	SPARE
				10667	7489			6671	7650				

ABBREVIATIONS:
R-RECEPTACLE, L-LIGHTS

TOTAL VA PHASE A: 17,337
TOTAL VA PHASE B: 15,139

* PROVIDE CIRCUIT BREAKER WITH THE CAPABILITY OF BEING LOCKED IN THE OPEN POSITION

TOTAL CONNECTED: 32,476

** PROVIDE HEATING, AIR CONDITIONING, REFRIGERATION TYPE CIRCUIT BREAKERS FOR HVAC UNITS

PANELBOARD **B** LOCATION: **JAN RM 108** MAIN: **600 A** VOLTAGE: **120/240 VOLTS**
SUPPLIED FROM: **UTILITY** FEED: **TOP** MAIN CKT BKR: **MLO** PHASE: **1**
MOUNTED: **SURFACE** ASYM A.I.C MIN.: **22 K** WIRE: **3**

LOAD SERVED	NO. POLES	TRIP AMPS	WIRE SIZE	VA/ PHASE A	VA/ PHASE B	CKT NO.	CKT NO.	VA/ PHASE A	VA/ PHASE B	WIRE SIZE	TRIP AMPS	NO. POLES	LOAD SERVED
** CONDENSER C-1	2	35	8	2024		1	2	2208		8	40	2	CONDENSER C-2 **
					2024	3	4		2208				
** HVAC PKG-1A	2	80	2	5704		5	6	979		12	15	1	FURNACE FU-1 **
					5704	7	8		1296	12	20	1	FURNACE FU-2 **
** HVAC PKG-1B	2	80	2	5704		9	10	5704		2	80	2	HVAC PKG-1C **
					5704	11	12		5704				
** HVAC PKG-1D	2	80	2	5704		13	14	5704		2	80	2	HVAC PKG-2 **
					5704	15	16		5704				
PANEL A	2	200	3/0	17337		17	18				20	1	SPARE
					15139	19	20				20	1	SPARE
SPARE	1	20				21	22				20	1	SPARE
SPARE	1	20				23	24				20	1	SPARE
						25	26						
						27	28						
						29	30						
						31	32						
						33	34						
						35	36						
						37	38						
						39	40						
						41	42						
				36473	34275			14595	14912				

ABBREVIATIONS:
R-RECEPTACLE, L-LIGHTS

TOTAL VA PHASE A: 51,068
TOTAL VA PHASE B: 49,187

* PROVIDE CIRCUIT BREAKER WITH THE CAPABILITY OF BEING LOCKED IN THE OPEN POSITION

TOTAL CONNECTED: 100,255

** PROVIDE HEATING, AIR CONDITIONING, REFRIGERATION TYPE CIRCUIT BREAKERS FOR HVAC UNITS

REV.	DATE	INITIAL
B	3 OCT 17	ACR
A	13 SEP 17	ACR

RISER DIAGRAM AND ELECTRICAL SCHEDULES

GYMNASIUM/FELLOWSHIP HALL ADDITION FOR UHCPC

3126 NEVEL DR. HUNTSVILLE, AL. 35810

DESIGN: C. RAMSEY
REVIEWED: C. RAMSEY 256-684-9445
DATE: 31 JULY 2017
SCALE: NONE

ALABAMA REGISTERED No. 27309 PROFESSIONAL ENGINEER 7/31/2017 CHARLIE CLARK RAMSEY, JR.

E-2

SHEET 2 OF 6

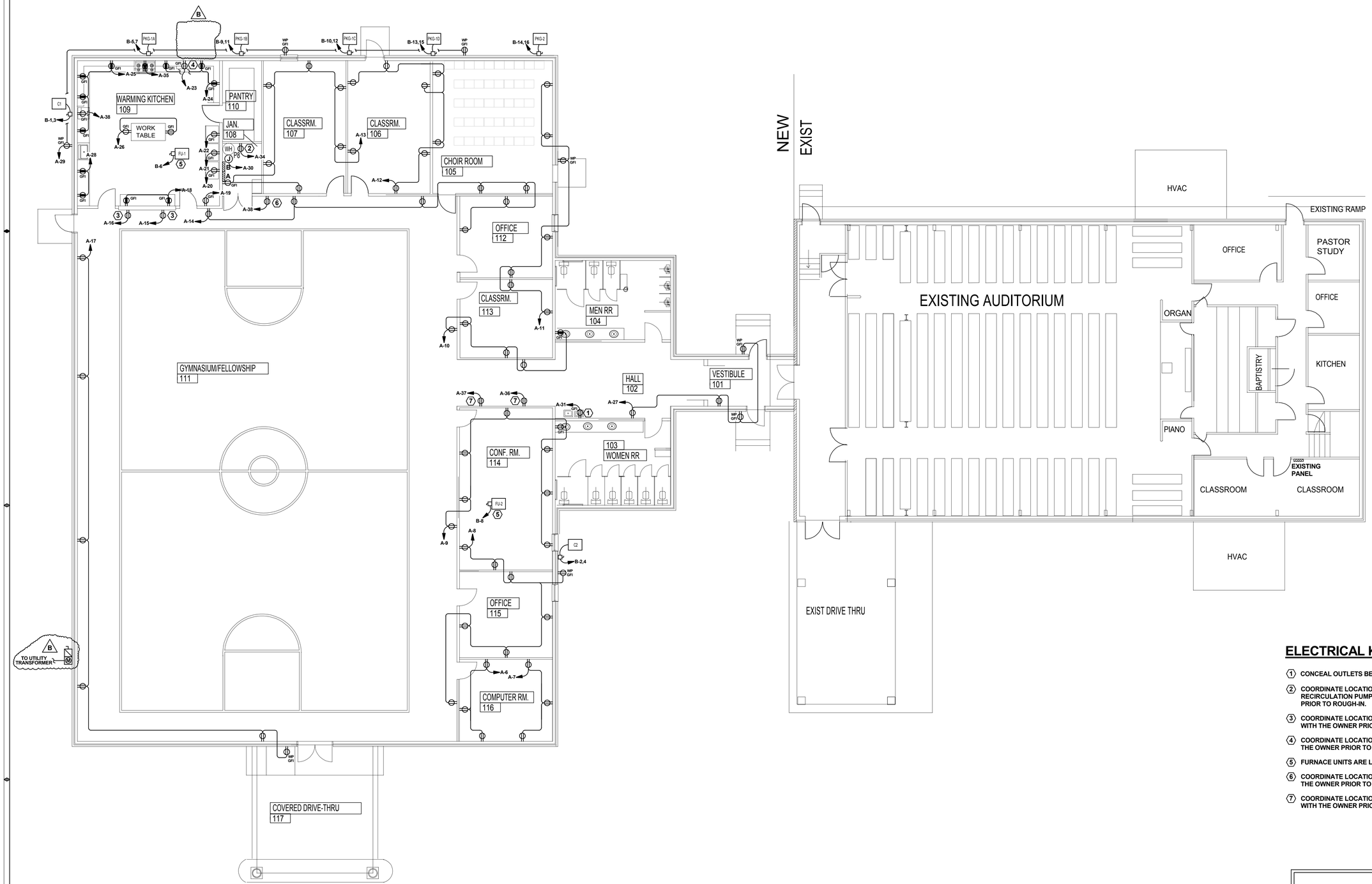

POWER PLAN

1/8" = 1' - 0"

ELECTRICAL KEYED NOTES

1. CONCEAL OUTLETS BEHIND WATER COOLER.
2. COORDINATE LOCATION OF RECEPTACLE FOR HOT WATER RECIRCULATION PUMP WITH THE MECHANICAL CONTRACTOR PRIOR TO ROUGH-IN.
3. COORDINATE LOCATION OF RECEPTACLE FOR THE FOOD WARMERS WITH THE OWNER PRIOR TO ROUGH-IN.
4. COORDINATE LOCATION OF RECEPTACLE FOR THE MICROWAVE WITH THE OWNER PRIOR TO ROUGH-IN.
5. FURNACE UNITS ARE LOCATED IN THE ATTIC SPACE.
6. COORDINATE LOCATION OF RECEPTACLE FOR THE ICE MAKER WITH THE OWNER PRIOR TO ROUGH-IN.
7. COORDINATE LOCATION OF RECEPTACLE FOR THE VENDING MACHINES WITH THE OWNER PRIOR TO ROUGH-IN.

REV.	DATE	INITIAL
B	3 OCT 17	ACR
A	13 SEP 17	ACR

POWER PLAN

GYMNASIUM/FELLOWSHIP HALL ADDITION FOR UHCPC

3126 NEVEL DR. HUNTSVILLE, AL. 35810

DESIGN: J. HALEY

REVIEWED: C. RAMSEY 256-684-9445

DATE: 31 JULY 2017

SCALE: 1/8" = 1' - 0"

ALABAMA REGISTERED No. 27309 PROFESSIONAL ENGINEER 7/31/2017 CHARLIE CLARK RAMSEY, JR.

E-3

SHEET 3 OF 6

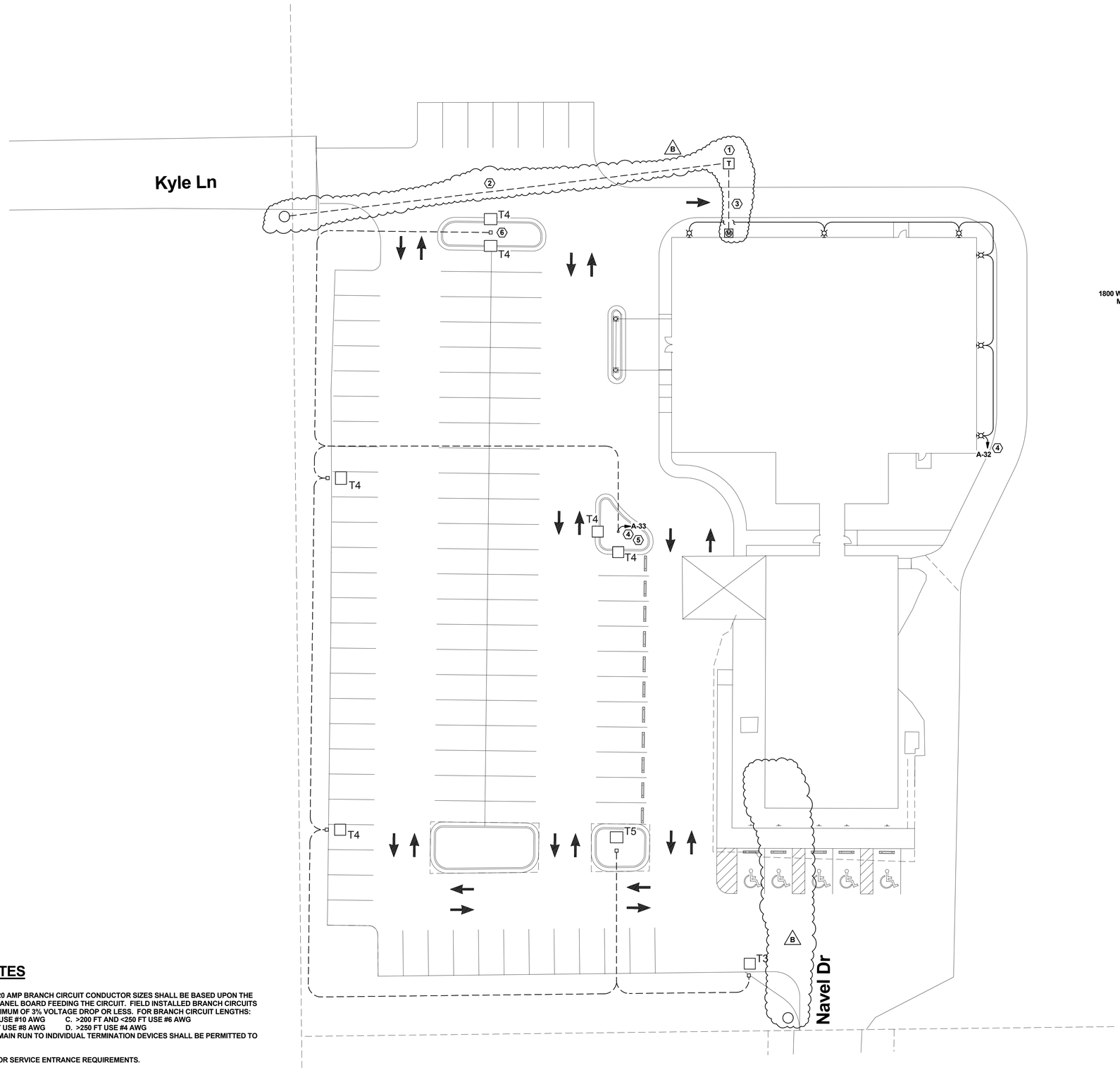

ELECTRICAL SITE PLAN
SCALE; 1" = 20' - 0"

ELECTRICAL SHEET KEYED NOTES

1. NEW UTILITY TRANSFORMER LOCATION.
2. NEW UTILTY FEEDER TO NEW TRANSFORMER LOCATION.
3. NEW UNDERGROUND SERVICE.
4. HOME RUN BRANCH CIRCUIT THROUGH LIGHTING CONTACTOR. SEE EXTERIOR LIGHTING CONTROL DIAGRAM FOR MORE INFORMATION.
5. ARM MOUNT: 2 AT 90 DEGREES.
6. ARM MOUNT: 2 AT 180 DEGREES.

B

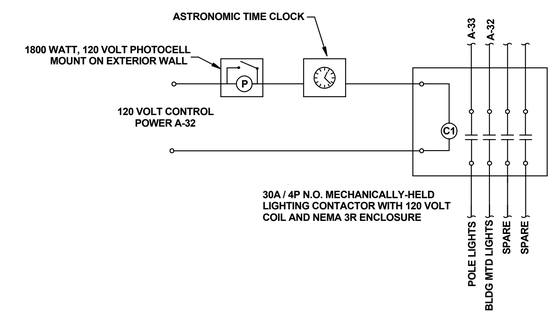

EXTERIOR LIGHTING CONTROL DIAGRAM
NOT TO SCALE

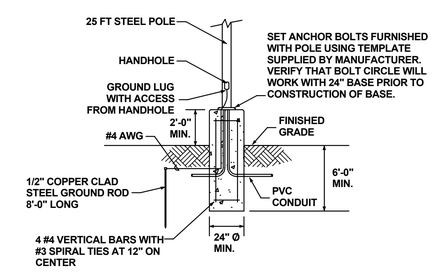

NOTE: AREA POLE LIGHT HEIGHT IS 27'-0".
25 FT POLE AND 2 FT CONCRETE BASE.

AREA LIGHT POLE BASE DETAIL
NOT TO SCALE

GENERAL NOTES

1. VOLTAGE DROP. FOR 20 AMP BRANCH CIRCUIT CONDUCTOR SIZES SHALL BE BASED UPON THE DISTANCE FROM THE PANEL BOARD FEEDING THE CIRCUIT. FIELD INSTALLED BRANCH CIRCUITS SHALL MAINTAIN A MINIMUM OF 3% VOLTAGE DROP OR LESS. FOR BRANCH CIRCUIT LENGTHS:
   A. >75 FT AND <125 FT USE #10 AWG C. >200 FT AND <250 FT USE #6 AWG
   B. >125 FT AND <200 FT USE #8 AWG D. >250 FT USE #4 AWG
   SHORT TAPS OFF THE MAIN RUN TO INDIVIDUAL TERMINATION DEVICES SHALL BE PERMITTED TO BE #12 AWG.
2. SEE RISER DIAGRAM FOR SERVICE ENTRANCE REQUIREMENTS.

REV.	DATE	INITIAL
B	3 OCT 17	ACR

ELECTRICAL SITE PLAN

GYMNASIUM/FELLOWSHIP HALL ADDITION FOR UHCPC

3126 NEVEL DR. HUNTSVILLE, AL. 35810

DESIGN: C. RAMSEY
REVIEWED: C. RAMSEY 256-684-9445
DATE: 31 JULY 2017
SCALE: 1" = 20' - 0"

ALABAMA REGISTERED PROFESSIONAL ENGINEER No. 27309 7/31/2017 CLARK RAMSEY, JR.

E-5

SHEET 5 OF 6

THE DESIGN FIRM

ANITA J. DENSON-ARCHITECT
102 ASHWOOD DRIVE • DECATUR, ALABAMA 35603
CELL: 256-318-4690 • HOME: 256-351-0435
E-MAIL ADDRESS: adenson09@gmail.com

Revised Comments from Building Department

ADDENDUM #3

GYMNASIUM/FELLOWSHIP HALL ADDITION FOR
UNION HILL CUMBERLAND PRESBYTERIAN CHURCH IN AMERICA
3126 NEVEL DRIVE
HUNTSVILLE, AL. 35810

OCTOBER 23, 2017

THE FOLLOWING ADDENDUM AS PREPARED BY THE DESIGN FIRM ON THE PROJECT IS HEREBY MADE A PART OF THE DRAWINGS DATED 9/5/17 (ELECTRICAL DRAWINGS WERE DATED 7/31/17):

CHANGES AND CLARIFICATIONS TO THE DRAWINGS TO ELECTRICAL DRAWINGS:

C0-C6 THESE DRAWINGS ARE NOW COMPLETE AND HAVE ALSO BEEN COORDINATED TO SHOW UPDATED UTILITIES SUCH AS TRANSFORMER, SPRINKLER SYSTEM CONNECTION, ETC. THESE DRAWINGS ARE DATED 10/11/17.

A1 DESCRIPTION OF BUILDING HAS BEEN REVISED TO REFLECT THAT IT IS NOW SPRINKLERED.

A2, A3, LS1 DELETED DOOR 106B AND ALL FIRERATED WALLS AND CEILINGS EXCEPT AT VESTIBULE 101 AND DOOR 102 (AND 4' EITHER SIDE OF DOOR 102) DUE TO BUILDING NOW BEING SPRINKLERED.

RISER ROOM 117 AND DOOR 117 ADDED DUE TO BUILDING NOW BEING SPRINKLERED.

ADDED LOCATION OF PORTABLE RESTROOM BUILDING (EAST OF EXISTING BUILDING ON EXISTING PAVEMENT.)

TYPE 1 HOOD ADDED TO KITCHEN AS PER CODE. THIS INCLUDES AUTOMATIC FIRE-EXTINGUISHING SYSTEM IN THE HOOD.

A4 TYPE 1 HOOD ADDED TO KITCHEN AS PER CODE. THIS INCLUDES AUTOMATIC FIRE-EXTINGUISHING SYSTEM IN THE HOOD.

A9 105A AND 106A NOT RATED NOW. 106B DELETED. 112-117 DOORS ADDED TO SCHEDULE. FINISH CLASS RATINGS NOTE ADDED.

LS1 NOTE ADDED ABOUT DRAFTSTOPPING AND FIREBLOCKING IN ATTIC SPACES EVERY 3000 S.F.

FOLLOWING THIS SHEET ARE RESPONSES TO THE REVIEW COMMENTS FROM THE BUILDING DEPARTMENT AND HUNTSVILLE FIRE AND RESCUE. THE DRAWINGS REFERRED TO AS REVISED ARE BEING RESUBMITTED WITH THIS ADDENDUM. UL DESIGNS FOLLOW THE RESPONSE PAGES.

Anita J. Denson

ANITA J. DENSON, ARCHITECT AL. REG. NO. 3519

STATE OF ALABAMA
ANITA JOHNSON DENSON
3519
Anita J. Denson
10/23/17
REGISTERED ARCHITECT

THE DESIGN FIRM

ANITA J. DENSON-ARCHITECT

102 ASHWOOD DRIVE • DECATUR, ALABAMA 35603

CELL: 256-318-4690 • HOME: 256-351-0435

E-MAIL ADDRESS: adenson09@gmail.com

GYMNASIUM/FELLOWSHIP HALL ADDITION FOR
UNION HILL CUMBERLAND PRESBYTERIAN CHURCH IN AMERICA
3126 NEVEL DRIVE
HUNTSVILLE, AL. 35810

OCTOBER 23, 2017

RESPONSE TO FIRE PLANS REVIEW BY GREGORY W. SPRUELL ON SEPTEMBER 18, 2017

1. CORRECTIONS HAVE BEEN MADE AS REQUESTED
2. SEE CIVIL DRAWINGS FOR FIRE HYDRANT.
3. FIRE ALARM SYSTEM WILL BE PROVIDED.
4. BUILDING SHALL BE SPRINKLERED.
5. DRAWINGS WILL BE SUBMITTED FOR FIRE ALARM SYSTEM SPRINKLER SYSTEM PRIOR TO WORK BEGINNING.
6. TYPE 1 HOOD SHALL BE INSTALLED ABOVE RANGE/OVEN APPLIANCE.
7. THE HOOD WILL HAVE APPROVED AUTOMATIC FIRE-EXTINGUISHING SYSTEM AS PER IFC 2003 904.2.1
8. CLASS K EXTINGUISHER SHALL BE INSTALLED IN KITCHEN AS PER NFPA 10 5.7
9. PLACARD IDENTIFYING THE USE OF THE EXTINGUISHER AS A SECONDARY BACKUP MEANS TO THE AUTOMATIC FIRE-EXTINGUISHING SYSTEM SHALL BE CONSPICUOUSLY PLACED NEAR EACH PORTABLE FIRE EXTINGUISHER IN THE COOK AREA.
10. ALL HVAC UNITS GREATER THAN 2000CFM WILL HAVE DUCT SMOKE DETECTION ON SUPPLY SIDE AS PER 2003 NFC 90A.
11. ELECTRICAL PANELS SHALL HAVE EMERGENCY LIGHTING.
12. NO OCCUPANCY SEPARATION REQUIRED IN ADDITION. THERE WILL BE 2 HOUR RATED WALL AT DOOR 102 WITH 1 HR. RATED EXTERIOR WALLS AND CEILING 4' EACH SIDE OF 2 HR. WALL. VESTIBULE 101 WILL BE 1 HR. RATED WITH 1 HR. CEILINGS. DOOR 101A SHALL BE 20 MIN. RATED DOORS.
13. FINISHES SHALL BE B IN ASSEMBLY (GYM) AND CLASS C EVERYWHERE ELSE NOW THAT THE BUILDING IS SPRINKLERED.
14. NOT APPLICABLE.

Anita J. Denson

ANITA J. DENSON, ARCHITECT AL. REG. NO. 3519

STATE OF ALABAMA
ANITA JOHNSON DENSON
3519
Anita J. Denson
10/23/17
REGISTERED ARCHITECT

THE DESIGN FIRM

ANITA J. DENSON-ARCHITECT

102 ASHWOOD DRIVE • DECATUR, ALABAMA 35603

CELL: 256-318-4690 • HOME: 256-351-0435

E-MAIL ADDRESS: adenson09@gmail.com

GYMNASIUM/FELLOWSHIP HALL ADDITION FOR
UNION HILL CUMBERLAND PRESBYTERIAN CHURCH IN AMERICA
3126 NEVEL DRIVE
HUNTSVILLE, AL. 35810

OCTOBER 23, 2017

RESPONSE TO BUILDING PLANS REVIEW BY JEFFREY JENKINS ON SEPTEMBER 19, 2017

- DEMOLITION PERMIT SHALL BE ACQUIRED FOR THE REMOVAL OF THE PORTION OF THE BUILDING ON NORTH SIDE OF EXISTING BUILDING. THE DEMOLITION RELEASE FROM THE DEPARTMENT OF NATURAL RESOURCES AND A FLOOD DEVELOPMENT PERMITE THROUGH CITY ENGINEERING DEPARTMENT SHALL ALSO BE ACQUIRED AS REQUIRED.
- CIVIL DRAWINGS ARE COMPLETE AND CORRECTED NOW.
- LIFE SAFETY PLANS SHOWS CORRECTED ALLOWABLE S.F. THE ADDITION SHALL BE SPRINKLERED NOW.
- THE FIRE WALL DOES MEET SECTION 705 OF THE 2003 IBC FOR A WALL THAT TERMINATES AT THE ROOF. UL DESIGNS ARE INCLUDED IN THIS ADDENDUM AND ARE REFERRED TO ON LS1.
- THE BUILDING IS SPRINKLERED NOW AND NO FIRE RATED CORRIDORS ARE REQUIRED. VESTIBULE 101 IS 1 HR. RATED WITH 20 MINUTE DOORS AT 101A.
- ATTIC AREA SHALL HAVE DRAFT STOPPING AND FIRE BLOCKING AS REQUIRED. THIS HAS BEEN NOTED ON LS1 REVISION.
- INTERIOR FINISHES ARE CLASS B IN ASSEMBLY (GYM) AND CLASS C EVERYWHERE ELSE NOW THAT THE BUILDING IS SPRINKLERED.
- THE PORTABLE MODULAR RESTROOM UNIT LOCATION IS SHOWN ON REVISED A2 AND A3. PERMIT AND APPROVAL FOR UTILITIES CONNECTIONS SHALL BE ACQUIRED AS REQUIRED.
- THE DUCT IN TWO HOUR FIRE WALL SHALL MEET CODE REQUIREMENTS WITH 1 ½ HOUR DAMPER.
- THERE WILL BE TYPE 1 HOOD INSTALLED ABOVE RANGE/OVEN APPLIANCE. THE HOOD WILL HAVE APPROVED AUTOMATIC FIRE-EXTINGUISHING SYSTEM AS PER 2003 IMC.
- THE ELECTRICAL ITEMS ON EITHER SIDE OF THE FIRE WALL SHALL BE CONTROLLED FROM THE APPROPRIATE BUILDING ELECTRICAL SERVICE FOR THAT BUILDING WHICH IT IS LOCATED.

Anita J. Denson

ANITA J. DENSON, ARCHITECT AL. REG. NO. 3519

STATE OF ALABAMA
ANITA JOHNSON DENSON
3519
Anita J. Denson
10/23/17
REGISTERED ARCHITECT

PARTIAL FLOOR PLAN FROM LS1 LIFE SAFETY PLAN SHOWING FIRE RATED ASSEMBLIES

UL DESIGNS FOLLOW THIS PAGE (4 PAGES)

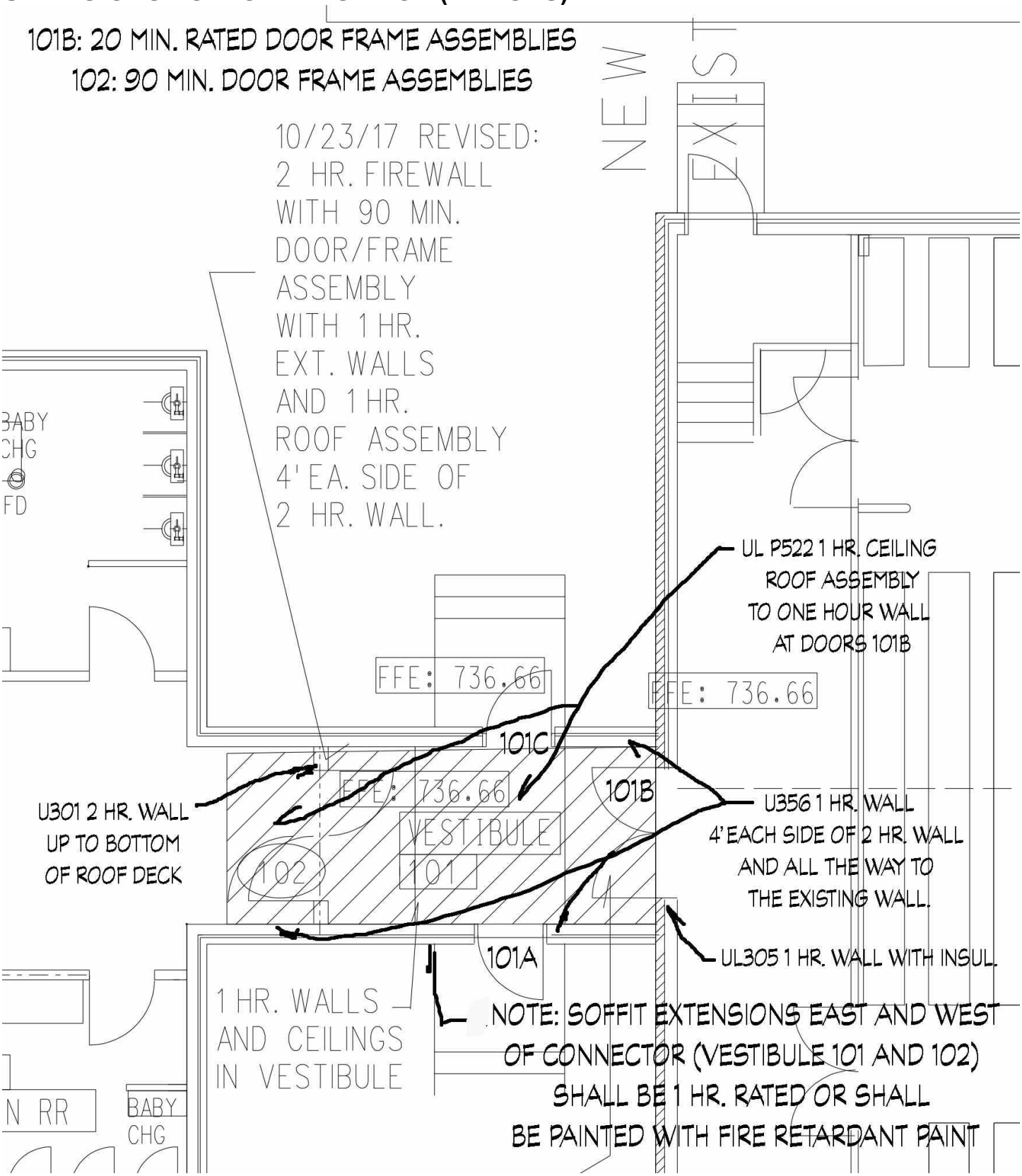

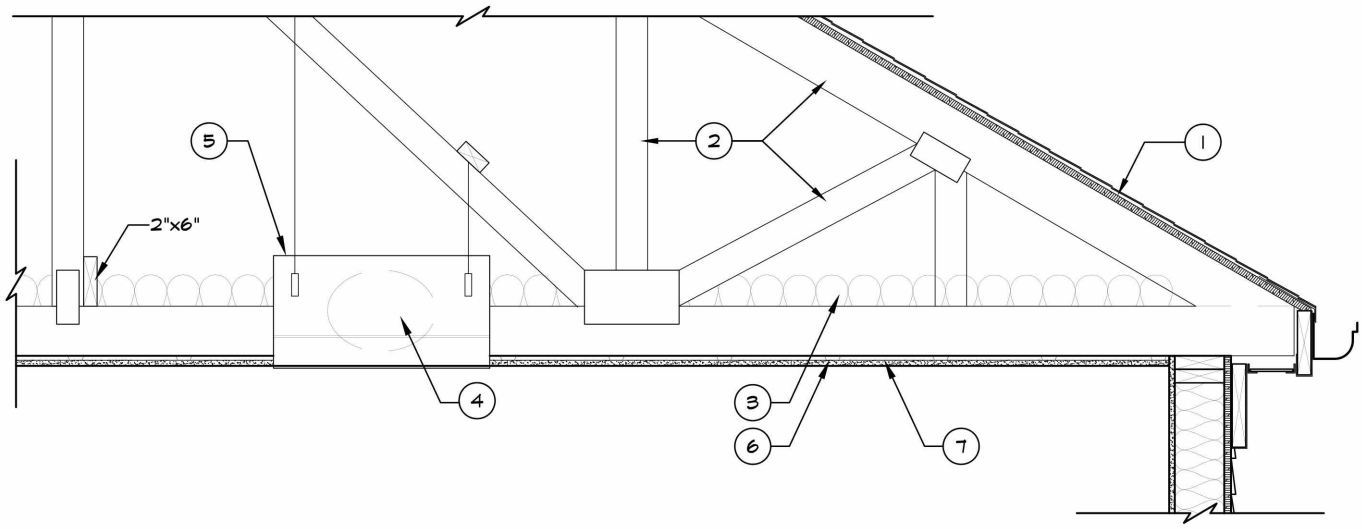

UL DESIGN NO. P522

CONSULT CURRENT UNDERWRITERS LABORATORIES "FIRE RESISTANCE DIRECTORY" FOR DETAILS

1. **ROOFING SYSTEM*** — ANY UL CLASS A, B OR C ROOFING SYSTEM (TGFU) OR PREPARED ROOF CIVERING (TFWZ) ACCEPTABLE FOR USE OVER NOM 15/32 IN. THICK WOOD STRUCTURAL PANELS, MIN GRADE "C—D" OR "SHEATHING". NOM 15/32 IN. THICK WOOD STRUCTURAL PANELS SECURED TO TRUSSES WITH NO. 6D RINGED SHANK NAILS SPACED 12 IN. OC ALONG EACH TRUSS. STAPLES HAVING EQUAL OR GREATER WITHDRAWAL AND LATERAL RESISTANCE STRENGTH MAY BE SUBSTITUTED FOR THE 6D NAILS. CONSTRUCTION ADHESIVE MAY BE USED WITH EITHER THE NAILS OR STAPLES.

2. **TRUSSES** — PITCHED OR PARALLEL CHORD TRUSSES, SPACED A MAX OF 24 IN. OC, FABRICATED FROM NOM 2 BY 4 LUMBER, WITH LUMBER ORIENTED VERTICALLY OR HORIZONTALLY. TRUSS MEMBER SECURED TOGETHER WITH MIN. 0.0356 IN. THICK GALV STEEL PLATES. PLATES HAVE 5/16 IN. LONG TEETH PROJECTING PERPENDICULAR TO THE PLANE OF THE PLATE. THE TEETH ARE IN PAIRS FACING EACH OTHER (MADE BY THE SAME PUNCH), FORMING A SPLIT TOOTH TYPE PLATE. EACH TOOTH HAS A CHISEL POINT ON ITS OUTSIDE EDGE. THESE POINTS ARE DIAGONALLY OPPOSITE EACH OTHER FOR EACH PAIR. THE TOP HALF OF EACH TOOTH HAS A TWIST FOR STIFFNESS. THE PAIRS ARE REPEATED ON APPROX. 7/8 IN. CENTERS WITH FOUR ROWS OF TEETH PER INCH OF PLATE WIDTH. WHERE THE TRUSS INTERSECTS WITH THE INTERIOR FACE OF THE EXTERIOR WALLS, THE MINIMUM TRUSS DEPTH SHALL BE 5 1/4 IN. WITH A MIN SLOPE OF 3/12 AND A MIN AREA IN THE PLANE OF THE TRUSS OF 21 SQ/FT. WHERE THE TRUSS INTERSECTS THE INTERIOR FACE OF THE EXTERIOR WALLS, THE MIN TRUSS DEPTH MAY BE REDUCED TO 3 IN. IF THE BATTS AND BLANKETS (ITEM 3) ARE USED AS SHOWN IN THE ILLUSTRATION AND ARE FIRMLY PACKED AGAINST THE INTERSECTION OF THE BOTTOM CHORDS AND THE PLYWOOD SHEATHING.

3. **BATTS AND BLANKETS*** — ANY GLASS FIBER INSULATION BEARING THE UL CLASSIFICATION MARKING AS TO SURFACE BURNING CHARACTERISTICS AND/OR FIRE RESISTANCE, HAVING A MIN DENSITY OF 0.5 PCF. INSULATION SHALL BE FITTED IN THE CONCEALED SPACE, DRAPED OVER THE RESILIENT CHANNELS.

4. **AIR DUCT*** — ANY UL CLASS 0 OR CLASS 1 FLEXIBLE AIR DUCT INSTALLED IN ACCORDANCE WITH THE INSTRUCTIONS PROVIDED BY THE DAMPER MANUFACTURER.

5. **CEILING DAMPER*** — MAX NOM AREA, 324 SQ IN. MAX SQUARE SIZE, 18 IN, BY 18 IN. RECTANGULAR SIZES NOT TO EXCEED 324 SQ IN. WITH A MAX WIDTH OF 324 SQ IN. MAX DAMPER HEIGHT IS 14 IN. INSTALLED IN ACCORDANCE WITH THE MANUFACTURER'S INSTALLATION INSTRUCTIONS PROVIDED WITH THE DAMPER. MAX DAMPER OPENINGS NOT TO CEILING AREA. DAMPER INSTALLED IN ACCORDANCE WITH THE MANUFACTURER'S INSTALLATION INSTRUCTIONS PROVIDED WITH THE DAMPER. MAX DAMPER OPENING NOT TO EXCEED 162 SQ IN. PER 100 SQ FT OF CEILING AREA.
   C&S AIR PRODUCTS — MODEL RD—521
   POTTORFF — MODEL CFD—521

5A. **ALTERNATE CEILING DAMPER*** — MAX NOM AREA SHALL BE 196 SQ IN. MAX SQUARE SIZE SHALL BE 14 IN. BY 14 IN. RECTANGULAR SIZES SHALL NOT EXCEED 196 SQ IN. WITH A MAX WIDTH OF 24 IN. MAX HEIGHT OF DAMPER SHALL BE 7 IN. DAMPER INSTALLED IN ACCORDANCE WITH THE MANUFACTURER'S INSTALLATION PROVIDED WITH THE DAMPER. MAX DAMPER OPENINGS SHALL NOT EXCEED 196 SQ IN. PER 100 SQ FT OF CEILING AREA.
   C&S AIR PRODUCTS — MODEL RD—521—BT
   POTTORFF — MODEL CFD—521—BT

6. **RESILIENT CHANNELS** — FORMED FROM MIN 0.020 IN. THICK GALV STEEL, 1/2 IN. DEEP BY 2 3/8 IN. WIDE AT THE BASE AND 1 3/8 IN. WIDE AT THE FACE AS SHOWN. INSTALLED PERPENDICULAR TO THE TRUSSES, SPACED AT A MAX OF 12 IN. OC WHEN INSULATION (ITEM 3) IS FITTED IN THE CONCEALED SPACE, DRAPED OVER THE RESILIENT CHANNEL/GYPSUM BOARD CEILING MEMBRANE. TWO COURSES OF RESILIENT CHANNEL POSITIONED 6 IN. OC AT WALLBOARD BUTT—JOINTS (3 IN. FROM EACH END OF WALLBOARD). CHANNELS ORIENTED OPPOSITE AT WALLBOARD BUTT—JOINTS. CHANNEL SPLICES OVERLAPPED 4 IN. BENEATH WOOD TRUSSES. CHANNELS SECURED TO EACH TRUSS WITH 1 1/4 IN. LONG TYPES S SCREWS.

7. **GYPSUM BOARD*** — ONE LAYER NOM 5/8 IN. THICK, 48 IN. WIDE BOARDS, INSTALLED WITH LONG DIMENSION PARALLEL TO TRUSSES. ATTACHED TO THE RESILIENT CHANNELS USING 1 IN. LONG TYPE S BUGLE—HEAD SCREWS. SCREWS SPACED A MAX OF 8 IN. OC ALONG BUTTED END—JOINTS AND IN THE FIELD.
   UNITED STATES GYPSUM CO — TYPES C, IP—X2, IPC—AR.

8. **FINISHING SYSTEM (NOT SHOWN)** — VINYL, DRY OR PREMIXED JOINT COMPOUND, APPLIED IN (2) COATS TO JOINTS AND SCREW—HEADS. NOM 2 IN. WIDE PAPER TAPE EMBEDDED IN FIRST LAYER OF COMPOUND OVER ALL JOINTS.

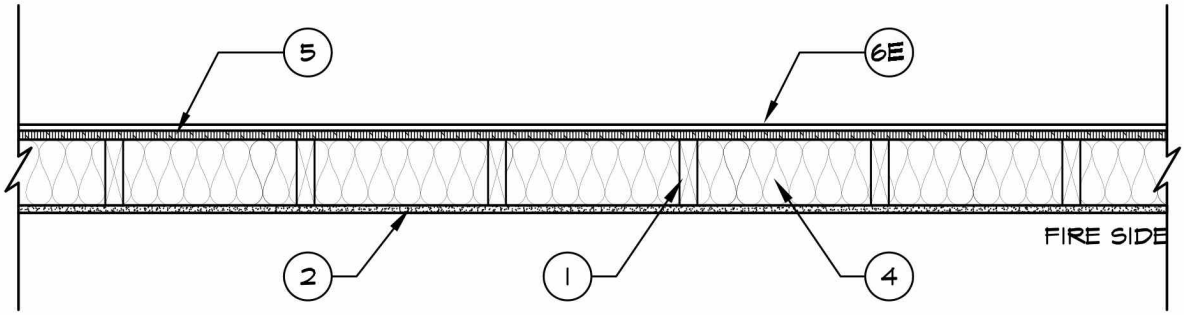

UL DESIGN NO. U356

CONSULT CURRENT UNDERWRITERS LABORATORIES "FIRE RESISTANCE DIRECTORY" FOR DETAILS

(EXPOSED TO FIRE ON INTERIOR FACE ONLY)
BEARING WALL RATING – 1 HR

1. **WOOD STUDS** – NOM 2 BY 6 IN. SPACED 16 IN. OC WITH (2) 2 BY 6 IN. TOP AND (1) 2 BY 6 IN. BOTTOM PLATES. STUDS LATERALLY BRACED BY WOOD STRUCTURAL PANEL SHEATHING (ITEM 5) AND EFFECTIVELY FIRE STOPPED AT TOP AND BOTTOM OF WALL.

2. **GYPSUM BOARD*** – ANY CLASSIFIED 5/8 IN. THICK, 4 FT WIDE, APPLIED VERTICALLY AND NAILED TO STUDS AND BEARING PLATED 7 IN. OC WITH 6D CEMENT–COATED NAILS, 1 7/8 IN. LONG WITH 1 1/4 IN. DIAMETER HEAD.

3. **JOINTS AND NAILHEADS (NOT SHOWN)** – WALLBOARD JOINTS COVERED WITH TAPE AND JOINT COMPOUND. NAIL HEADS COVERED WITH JOINT COMPOUND.

4. **BATTS AND BLANKETS*** – GLASS FIBER INSULATION, 5 1/2" THICK, PRESSURE FIT TO FILL WALL CAVITIES BETWEEN STUDS AND PLATES. GLASS FIBER INSULATION TO BE FACED WITH ALUMINUM FOIL OR KRAFT PAPER AND TO HAVE A MIN DENSITY OF 0.9 PCF (MIN R–13 THERMAL INSULATION RATING). SEE BATTS AND BLANKETS (BKNV) CATEGORY IN THE BUILDING MATERIALS DIRECTORY AND BATTS AND BLANKETS (BZJZ) CATEGORY IN THE FIRE RESISTANCE DIRECTORY FOR NAMES OF CLASSIFIED COMPANIES.

5. **WOOD STRUCTURAL PANEL SHEATHING** – MIN 7/16 IN. THICK, 4 FT WIDE WOOD STRUCTURAL PANELS, MIN GRADE "C–D" OR "SHEATHING". INSTALLED WITH LONG DIMENSION OF SHEET (STRENGTH AXIS) OR FACE GRAIN OF PLYWOOD PARALLEL WITH OR PERPENDICULAR TO STUDS. HORIZONTAL JOINTS BACKED WITH NOM 2 BY 6 IN. WOOD BLOCKING. ATTACHED TO STUDS ON EXTERIOR SIDE OF WALL WITH 6D CEMENT COATED BOX NAILS SPACED 6 IN. OC AT PERIMETER OF PANELS AND 12 IN. OC ALONG INTERIOR STUDS.

6. **EXTERIOR FACINGS** – INSTALLED IN ACCORDANCE WITH THE MANUFACTURER'S INSTALLATION INSTRUCTIONS. ONE OF THE FOLLOWING EXTERIOR FACINGS IS TO BE APPLIED OVER THE SHEATHING:

   E. **Brick Veneer —** Any type on nom 4 in. wide brick veneer. When brick veneer is used, the rating is applicable with exposure on either face. Brick veneer fastened with corrugated metal wall ties attached over sheathing to wood studs with 8d nail per tie: ties spaced not more than each sixth course of brick and max 32 in. OC horizontally. One in. air space provided between brick veneer and sheathing.

SEE STRUCTURAL DRAWINGS FOR FRAMING INFORMATION.

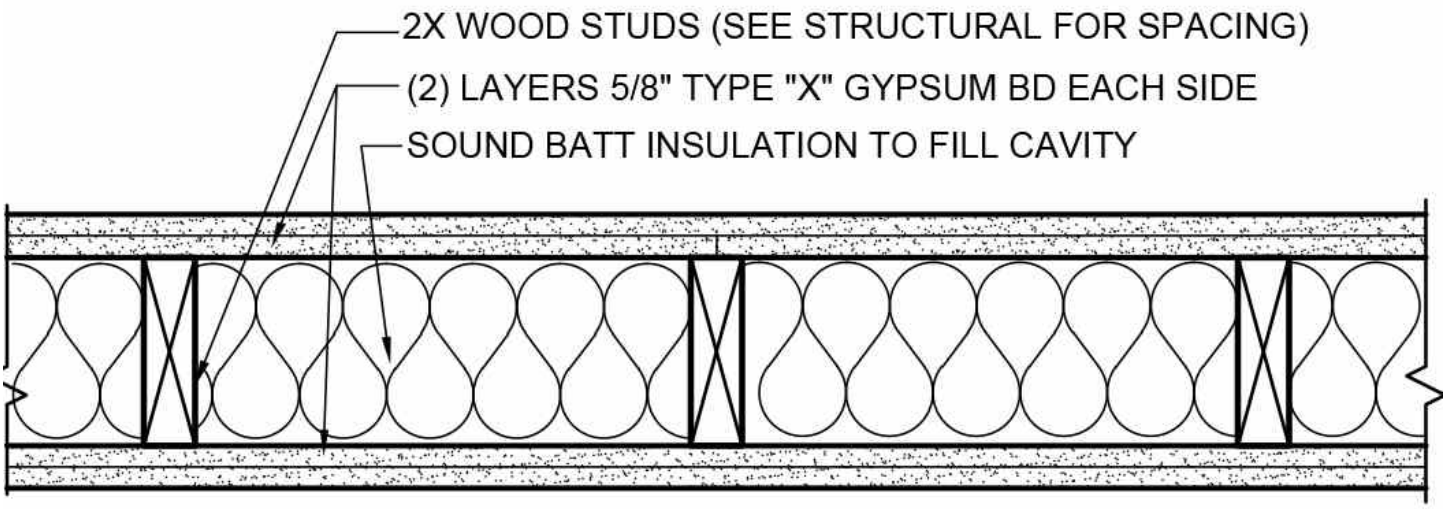

NOTE:
1. TOP AND BOTTOM OF WALL EFFECTIVELY FIRESTOPPED
2. GYP. BD. TO STRUCTURE ABOVE
3. STAGGER JOINTS

2 HOUR FIRE WALL (UL DESIGN U301)

---

1 Hour Fire-rated Construction	Dimensional Lumber (Refer to ULC/UL Design Directory listings for loading conditions. See page 6.)		Acoustical Performance			Reference	
Construction Detail	Description	Test Number	STC	IIC	Test Number	ARL	Index
clg. wt. 4 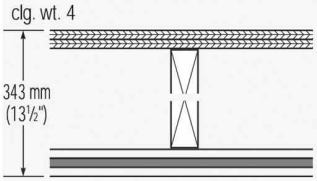 343 mm (13½")	• 2 layers 12.7 mm (1/2") SHEETROCK FIRECODE C Core Gypsum Panels – 25 mm (1") nominal wood sub and finished floor – 2x10 wood joist 400 mm (16") o.c. – Resilient channel – joints finished • optional veneer plaster	**UL Des L510**			**Assembly not recommended when sound control is a major consideration.**	SA920	**B-57**

1 HOUR RATED CEILING ASSEMBLY FOR VESTIBULE 101

UL U305: AT DOOR 101B WALL (CONNECTS EXISTING AND ADDITION)

Fire Test	Fire Rating	STC	Thickness (in.)
UL U305 Wood Stud (Load-bearing) Interior Partitions Sound Test: RAL-TL11-130 / RAL-TL11-173	1 hr.	34	4-3/4"

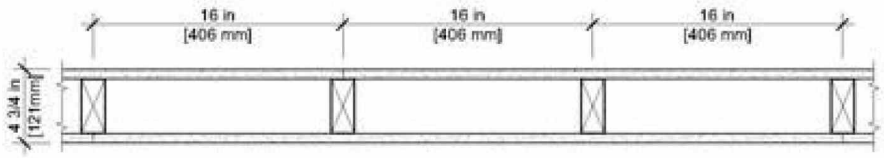

- **Gypsum Board** - 5/8 in. thick gypsum board applied horizontally or vertically
- **Wood Studs** -2 in. x 4 in. wood studs spaced max. 16 in. OC, effectively firestopped
- **Batts and Blankets** -Min. 3 in. thick mineral wool batt insulation
- **Gypsum Board** -5/8 in. thick gypsum board applied horizontally or vertically

HUNTSVILLE
The Star of Alabama

Building Plans Review

Inspection Department

Public Service Building
320 Fountain Circle
Huntsville, Alabama 35801
Ph: 256-427-5353
Fax: 256-427-5346

September 19, 2017

The Design Firm
Anita J. Denson - Architect
102 Ashwood Drive
Decatur, Alabama 35603
thedesignfirm@bellsouth.net
Phone: 256-351-0435

Re: **Gymnasium/Fellowship Hall Addition**
Union Hill Cumberland Presbyterian Church
3126 Nevel Drive NW
Huntsville, Alabama 35810

Your response is required for the following review comments based on the 2003 editions of the International Building, Plumbing, Fire, Mechanical and Gas Codes, the 2002 National Electrical Code, the ICC/ANSI A117.1-1998 and the 2003 International Existing Building Code.

- A demolition permit will be required for the removal of the portion of the building to the rear and north side. This requires a demolition release through the Department of Natural Resources and a flood development permit through City Engineering Department.
  Contact: Darlene Duerr at 256-427-5760 for the demolition release.
  Gary Gleason at 256-427-5350 for the flood development permit

- Civil documents have been submitted for review but at this date are incomplete. The grading, drainage and flood development permits that are based on the civil documents are required before the building permit may be issued.

- In your code research, the area increase percentage for frontage, used was .98 or 98 %. The area increase for frontage is limited to 75% in this case under Section 506 of the 2003 IBC.

Recalculate and correct the code analysis to confirm the building is within the allowable buildable area.

- Provide the **fire wall** design detail that complies with Section 705 of the 2003 IBC.

- From the gymnasium/fellowship floor to the exit vestibule connector, you have an exit access corridor that falls under the requirements of Section 1016 of the 2003 IBC for fire rated protection of one hour with twenty minute doors at the restrooms and at the gymnasium/fellowship floor area. Please revise your plans to show compliance with Section 1016.

- The attic area will require draft stopping in compliance with Section 717 for this type construction every 3000 sq. ft. Fire blocking is also required per Section 717 of the 2003 IBC.

- The interior finish material flame spread and smoke development limits of Chapter 8 of the 2003 IBC must be in compliance for this occupancy. Please confirm.

- Portable modular restroom unit must be approved for location and utilities connections. A separate permit is required for the temporary restroom unit.

- The single duct penetration through the two hour **fire wall** at the vestibule is allowed but will require a fire damper, at the penetration, rated one and one half hour in accordance with Section 607.3.1 and 607.5.1 of the 2003 IMC and Section 705.11 and 716.3.1 of the 2003 IBC.

- The gas oven/range will require a type 1 hood designed and installed as required in Sections 506, 507, 508 and 509 of the 2003 IMC.

- There is a **fire wall** separation at the vestibule connector between buildings. All electrical lighting and receptacles on either side of this fire wall should be controlled from the appropriate building electrical service for that building which it is located.

This review by no means relieves anyone from any codes and ordinances of the City of Huntsville.
Any deviation from the technical codes and ordinances must be specifically brought to the attention of the City of Huntsville Building Official.

City of Huntsville
Senior Plans Examiner

Jeffery H. Jenkins

Jeffery H. Jenkins
Ph. 256-427-5353
jeff.jenkins@huntsvilleal.gov

BUREAU OF FIRE PREVENTION

HUNTSVILLE FIRE & RESCUE

P.O. Box 308
Huntsville, Alabama 35804

Phone (256) 427-5150

D. WILKERSON
FIRE MARSHAL

R. GIPSON
ASST. FIRE MARSHAL

FIRE PLANS REVIEW

Union Hill Presbyterian Gym/Fellowship Hall
3126 Nevel Dr
September 18, 2017

Mixed A3, E, B
Type V Construction
@11360sqft Non Sprinkled

1) Rejected; corrections necessary.

2) Install a fire hydrant. Where a portion of the facility or building hereafter constructed or moved into or within the jurisdiction is more than 400 feet from a hydrant on a fire apparatus access road, as measured by an approved route around the exterior of the facility or building, on-site fire hydrants and mains shall be provided where required by the fire code official. IFC 2003 508.5.1

3) Based on calculated occupant load greater than 300 a Fire Alarm System will be required. 2003 NFPA 101 Chapter 12

4) Buildings containing assembly occupancies with occupant loads of more than 300 shall be protected by an approved, supervised automatic sprinkler system in accordance with Section 9.7 NFPA 101 **12.3.5.1**

5) Additions or deletions to fire alarm and/or sprinkler system will require drawings to be submitted to this office prior to beginning work. Drawings shall be submitted by the company certifying the affected system.

6) A Type I hood shall be installed at or above all commercial cooking appliances and domestic cooking appliances used for commercial purposes that produce grease vapors. 2003 IFC 610.2

7) Each required commercial kitchen exhaust hood and duct system required by Section 610 to have a Type I hood shall be protected with an approved automatic fire-extinguishing system installed in accordance with this code. IFC 2003 904.2.1

8) Install a Class K extinguisher in kitchen area. NFPA 10 5.7

9) A placard identifying the use of the extinguisher as a secondary backup means to the automatic fire-extinguishing system shall be conspicuously placed near each portable fire extinguisher in the cooking area. 2001 NFPA 96 10.2.2

10) All HVAC units greater than 2000cfm require duct smoke detection on supply side. 2003 NFC 90A

11) Electrical panels shall have emergency lighting.

12) Occupancy separations shall be vertical, horizontal, or both or, when necessary, of such other form as required providing complete separation between occupancy divisions in the building NFPA 101 6.1.14.4.4

13) Assembly NFPA 101 Chap 12 or 13: **13.3.3.3** Interior wall and ceiling finish materials complying with Section 10.2 shall be Class A or Class B in general assembly areas having occupant loads of more than 300, and shall be Class A, Class B, or Class C in assembly areas having occupant loads of 300 or fewer.

14) Huntsville Fire Department requires the use of Click 2 Enter hardware to open security gates http://www.click2enter.net/ .

Plans reviewed by the Bureau of Fire Prevention shall not relieve the applicant of responsibility of compliance with all Fire Codes, Regulations, and City Ordinances.

Gregory W. Spruell
Fire Plans Examiner
256-427-5153
E-mail: greg.spruell@huntsvilleal.gov

THE DESIGN FIRM

ANITA J. DENSON-ARCHITECT
102 ASHWOOD DRIVE • DECATUR, ALABAMA 35603
CELL: 256-318-4690 • HOME: 256-351-0435
E-MAIL ADDRESS: adenson09@gmail.com

ADDENDUM #3

GYMNASIUM/FELLOWSHIP HALL ADDITION FOR
UNION HILL CUMBERLAND PRESBYTERIAN CHURCH IN AMERICA
3126 NEVEL DRIVE
HUNTSVILLE, AL. 35810

NOVEMBER 1, 2017

THE FOLLOWING ADDENDUM AS PREPARED BY THE DESIGN FIRM ON THE PROJECT IS HEREBY MADE A PART OF THE DRAWINGS DATED 9/5/17 (ELECTRICAL DRAWINGS WERE DATED 7/31/17):

CHANGES AND CLARIFICATIONS TO THE DRAWINGS TO ELECTRICAL DRAWINGS:
E5 "W" ON EXTERIOR WALL MOUNTED LIGHT FIXTURES WAS MISSING OFF OF THIS DRAWING. SEE BELOW FOR PARTIAL DRAWING WITH THOSE FIXTURES NOTED WITH "W".

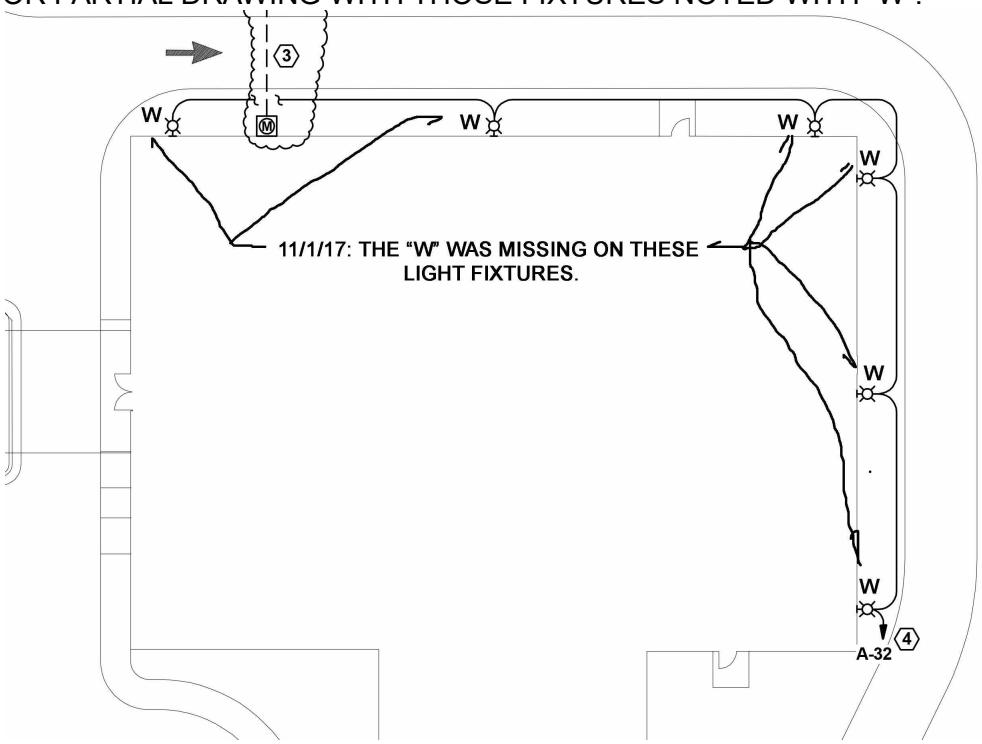

THIS ADDENDUM WAS DONE AT THE DIRECTION OF THE ELECTRICAL ENGINEER. IF HIS SEAL IS NEEDED, IT WILL BE RE-ISSUED WITH THAT.

Anita J. Denson

ANITA J. DENSON, ARCHITECT AL. REG. NO. 3519

STATE OF ALABAMA
ANITA JOHNSON DENSON
3519
Anita J. Denson
11/1/17
REGISTERED ARCHITECT

GYMNSIUM/FELLOWSHIP HALL ADDITION FOR UNION HILL CUMBERLAND PRESBYTERIAN CHURCH IN AMERICA
3126 NEVEL DRIVE
HUNTSVILLE, AL. 35810

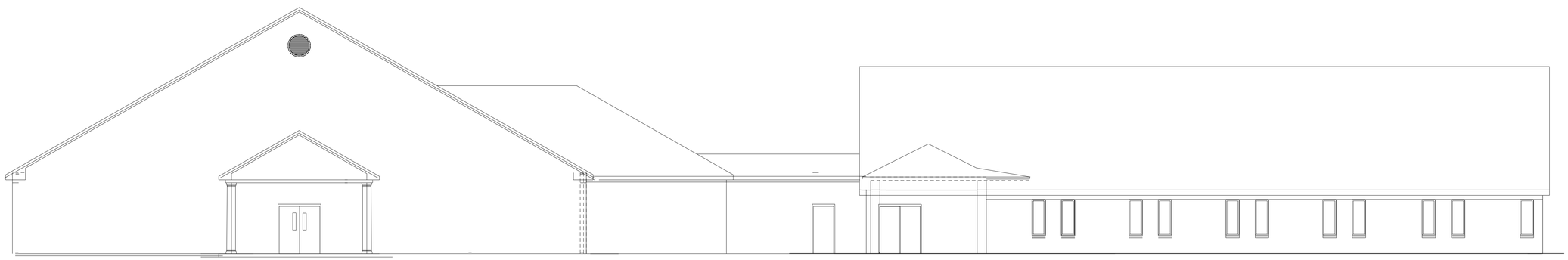

REVISED PLANS PER BUILDING DEPT COMMENTS
OCT 25, 2017

THE DESIGN FIRM

STATE OF ALABAMA
ANITA JOHNSON DENSON
3519
10/23/17
REGISTERED ARCHITECT

GYMNSIUM/FELLOWSHIP HALL ADDITION FOR
UNION HILL CUMBERLAND PRESBYTERIAN CHURCH
IN AMERICA
3126 NEVEL DR.; HUNTSVILLE, AL. 35810

ANITA J. DENSON - ARCHITECT . 102 ASHWOOD DRIVE . DECATUR, AL. 35603
adenson09@gmail.com . PHONE: 256-351-0435 . MOBILE: 256-318-4690

SHEET TITLE:
TITLE SHEET

DATE	DRAWN BY
9/5/17	

REVISIONS

SHEET	OF
T1	1

Union Hill Church Expansion

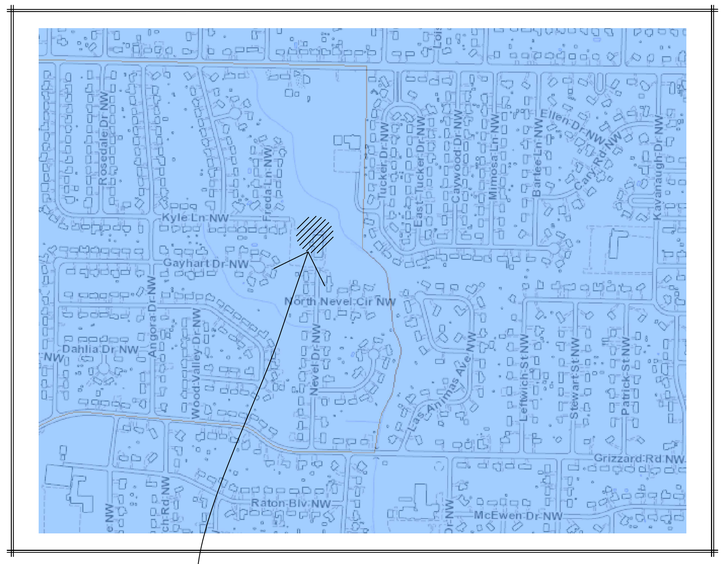

Vicinity Map
Not to Scale

Sheet Index

Address:
3126 Nevel Dr NW
Huntsville, AL 35810

Prepared for:
Union Hill Church

Plan Set Date:
March 2, 2018

General Notes:

1. The locations of existing utilities are shown in as approximate only. The contractor shall verify the exact location of all existing utilities before commencing work. Contractor shall be fully responsible for any and all damages which might occur by his failure to exactly locate and preserve any and all utilities.
2. Contractor is responsible for making application and paying for necessary permits.
3. The Contractor shall to prevent the destruction of all survey monuments, bench marks, property corners and all other survey points. Where the removal of such points are necessary for the accomplishment of the work, the Contractor shall inform the Engineer in writing, prior to the disturbance of any point, and shall not disturb the point until written permission to do so has been issued by the Engineer.
4. All existing trees outside of the limits of work shall be protected during the accomplishment of the work, and are not to be damaged in any manner.
5. All boulders, debris, excess construction materials, material generated from demolition of existing structures and facilities or trash shall be removed from site at contractor's expense.
6. Pavement cuts shall be repaired with material in-kind to that removed.
7. In accordance with generally accepted construction practices, the contractor is solely and completely responsible for conditions of the job site, including safety of all persons and property during performance of the work. This requirement applies continuously and shall not be limited to normal working hours.
8. Contractor shall provide adequate traffic control devices and safety measures for construction work within public right-of-ways in accordance with the Manual on Uniform Traffic Control Devices for Streets and Highways.
9. The duty of the Engineer to conduct construction observation of the contractor's performance is not intended to include review of the adequacy of the Contractor's safety measures, in, on or near the construction site.
10. The Contractor shall be responsible for cleaning dirt and debris from the adjoining streets parking lots, and drives during construction. Any damage to adjoining and existing facilities shall be repaired by the Contractor, at no additional cost to the owner, during the construction of this site.
11. No fill dirt shall be placed on the property that might interfere with drainage flow from adjacent property. Storm drainage system shall be installed prior to fill material being placed.
12. The Contractor shall be totally responsible for TVI, vacuum testing manholes, and air testing sewer lines if required.
13. No changes shall be made to these approved plans without the Engineer of Record being notified before changes are made and the Engineer of Record acquiring approval from the City Engineer.
14. All sanitary sewer pipe shall either be SDR 26 PVC or Class 350 Ductile Iron.

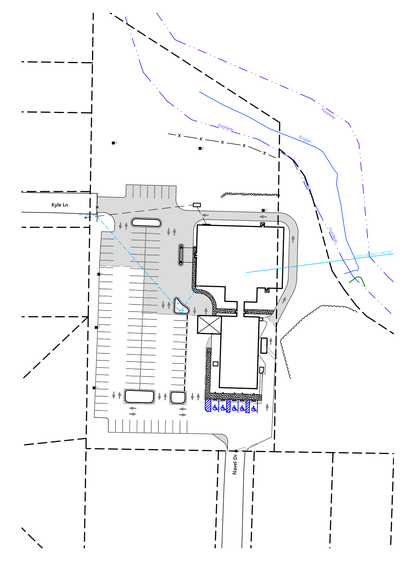

Site Plan
Scale: 1" = 100'

Prepared by:

MULLINS, LLC
CIVIL ENGINEERING, DEVELOPMENT DESIGN
SURVEYING, LANDSCAPE ARCHITECTURE
2101 West Clinton Avenue, Suite 503, Huntsville, AL 35805
(256) 690-5312

Floodplain Notes:

1. The 1 Percent Annual Chance Floodplain and Floodway boundaries and Lettered Cross Section(s) provided by the Federal Emergency Management Agency (FEMA) National Flood Insurance Program (NFIP) as part of a Digital Flood Insurance Rate Map (DFIRM) were obtained from City of Huntsville Planning Department/ Geographic Information System (GIS) Group on September 28, 2017, in State Plane Alabama East Zone NAD 83 coordinates consistent with this drawing. As appropriate, the DFIRM data has been edited by the City GIS Group to reflect Letters of Map Change (LOMCs) published by FEMA.

2. Required Finished Floor Elevation (FFE) and the Lowest Elevation of Equipment/Exposed Utilities, may be determined to be higher than Minimum (Min.) FFE upon permitting of building construction by qualified City of Huntsville Staff. The required survey control/bench mark and datum for such elevations will also be determined upon permitting of building construction by qualified City of Huntsville Staff.

3. There shall be no net filling at any location, permanent or temporary, of any kind (including but not limited to soils, pond construction, pavement sections, and stockpiled materials) nor placement or construction of structures of any kind (including but not limited to temporary construction trailers and sanitary & storm sewer structures) above existing grade in the Floodway during the course nor as a result of this or any other development. At the discretion of qualified City of Huntsville Staff and upon completion/finished construction this will have to be certified in a letter by a Professionally Licensed Engineer or Surveyor.

4. The 1 Percent Annual Chance Floodplain and Floodway Boundaries and Base Flood Elevations (BFEs), which are used to determine Min./Required FFE and the Lowest Elevation of Equipment/Exposed Utilities, are subject to change by FEMA, including at the request of others. Any more restrictive Floodplain related changes subsequent to approval of this drawing and any associated plan set will be used for regulatory purposes.

Demolition Notes: (this sheet only)

1. Contractor shall maintain & protect ex. utilities on site. Any damage to such shall be repaired and/or replaced at no expense to the owner.

2. Contractor shall coord. w/ HSV Utilities in the demo of ex. bldg. for preservation & reuse of utility service connections.

Demolition Keynotes:

A. REQ'D SAWCUT LINE.

B. REQ'D DEMO AND REMOVE EX. ASPHALT PAVING IN THIS AREA; COORD. WITH LAYOUT PLAN.

C. REQ'D DEMO AND REMOVE EX. CONCRETE.

D. REQ'D DEMO AND REMOVE EX. BUILDING.

E. REQ'D DEMO AND REMOVE EX. FENCE.

F. EX. PARKING LOT, TO BE RE-STRIPPED. REQ'D PREP, AS NEEDED, FOR RE-STRIPPING AT TIME OF NEW LOT STRIPPING.

G. REQ'D SILT FENCE, LENGTH AS SHOWN, SEE DETAIL.

H. EX. LIGHT, POLE, & BASE, TO REMAIN.

I. OMIT.

J. EX. SIDEWALK, TO REMAIN.

K. EX. FENCE, TO REMAIN.

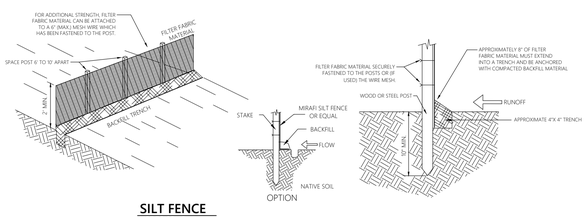

SILT FENCE
NOT TO SCALE

Flood Certificate

I, Richard D. Campbell, the surveyor of record, certify that the property shown hereon lies within flood hazard area of "X" (unshaded) as shown on the Federal Insurance Administation's Flood Insurance Rate Maps for Madison County, Alabama.

FIRM Panel #01089C0341F
Dated October 2nd, 2014

Richard D. Campbell, PLS
AL Reg. No. 19740

ALABAMA REGISTERED NO. 19740 PROFESSIONAL LAND SURVEYOR RICHARD D CAMPBELL

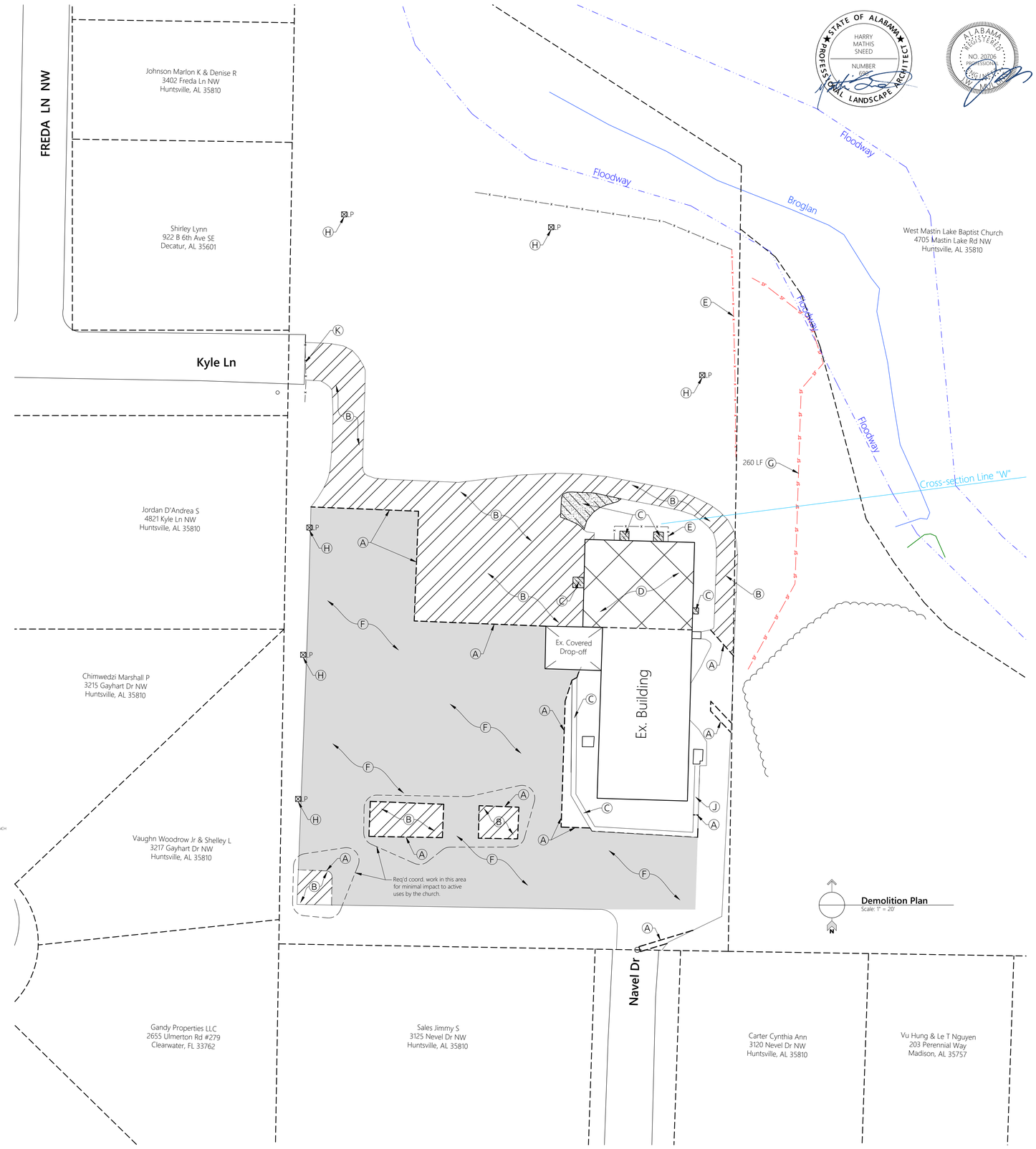

STATE OF ALABAMA PROFESSIONAL LANDSCAPE ARCHITECT HARRY MATHIS SNEED NUMBER 606

ALABAMA REGISTERED NO. 20706 PROFESSIONAL ENGINEER

REVISIONS
DATE: ---
DATE: ---
DATE: ---
DATE: ---
DATE: ---
DATE: ---
DATE: ---
DATE: ---
DATE: ---
DATE: ---

MULLINS, LLC
CIVIL ENGINEERING, DEVELOPMENT DESIGN
SURVEYING, LANDSCAPE ARCHITECTURE
2101 West Clinton Avenue, Suite 503, Huntsville, AL 35805
(256) 690-5312

Plan Set Title

Union Hill Church Expansion

Huntsville, AL

PREPARED FOR: Union Hill Church

Demolition Plan

Job No. **17-139**
Date: **2018 3/02**
Drawn By: **JLH**
Checked By: **HMS**

SHEET NUMBER
C1
Sheet **1** of **6**

TOP 6" OF SUBGRADE SHALL BE COMPACTED TO 100% PROCTOR DENSITY, BELOW 6" IS TO BE COMPACTED TO 95% PROCTOR DENSITY AS DETERMINED BY AASHTO T-99 COMPACTION TEST. SEE SPECIFICATIONS. FOR ADDITIONAL INFORMATION.

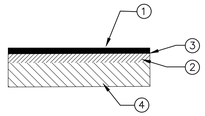

1. 112 LBS./S.Y. (1") HOT. BITUMINOUS CONCRETE WEARING COURSE, ALDOT REF. 424-A, MIX 2 (SILICEOUS AGGREGATE)
2. 224 LBS./S.Y. (2") HOT BITUMINOUS CONCRETE BINDER COURSE, ALDOT REF. 414, MIX 1 OF SPECS.
3. 0.10 GAL./S.Y. EMULSIFIED ASPHALT OR 0.07 GAL./S.Y. TACK COAT. ALL MATERIALS ARE TO BE IN ACCORDANCE WITH SEC. 405 OF THE AL. DOT SPECIFICATIONS.
4. 5" LAYER OF DENSE GRADED LIMESTONE BASE COURSE. AL. DOT REF. 301 OF SPECS. ALL MATERIALS SHALL BE IN ACCORDANCE WITH SEC. 825, TYPE "B", COMPACTION TO 100% LVD.

Asphalt Paving Section
NOT to Scale

**NOTE: INSTALL TOOLED CONTROLLED JOINTS AT 5' O.C. WITH 1/2" FULL DEPTH ASPHALT IMPREGNATED EXPANSION JOINTS AS SHOWN

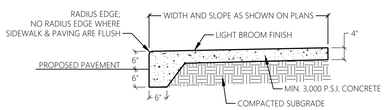

Sidewalk w/ Turn-down Edge
NOT to Scale

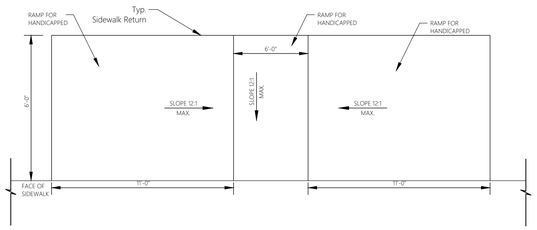

Detail Ramp for Handicap
NOT to Scale

KEYNOTE LEGEND:	
A.	REQ'D 24" CONCRETE CURB & GUTTER.
B.	REQ'D 4" THICK CONCRETE SIDEWALK, LIGHT BROOM FINISH, COORD. W/ GRADING PLAN.
C.	REQ'D ASPHALT PAVING, SEE DETAIL.
D.	REQ'D TRAFFIC FLOW MARKING, WHITE, PAINTED.
E.	REQ'D 4" WIDE PARKING STALL STRIPE & MARKINGS, PAINTED, BLUE.
F.	REQ'D 4" WIDE PARKING STALL STRIPE, PAINTED, WHITE.
G.	REQ'D 12" TURN-DOWN EDGE, SEE DETAIL.
H.	REQ'D MEET & MATCH Ex. W/ NEW WORK AT THIS POINT.
I.	OMIT.
J.	REQ'D HC RAMP, SEE DETAIL.
K.	REQ'D STORM STRUCTURE, SEE UTILITY PLAN.
L.	REQ'D STORM PIPE, SEE UTILITY PLAN.
M.	REQ'D ADA PARKING SIGN.
N.	REQ'D CONCRETE PRE-FABRICATED CURB STOP, 8' LONG, SECURE TO PAVING WITH 18" LONG #4 (MIN.) REBAR.
O.	OMIT.
P.	REQ'D SLOPE PAVED HEADWALL, SEE DETAIL, COORD. W/ GRADING PLAN.
Q.	REQ'D LANDSCAPE AREA: MIN. 12" THICK APPROVED TOPSOIL, CLEAR OF DEBRIS AND UNSUITABLE MATERIALS, RAKED FOR SMOOTH FINISH GRADE, PER GRADING PLAN; SEE LANDSCAPE PLAN FOR FURTHER TREATMENT.
R.	REQ'D TRANSFORMER, SEE UTILITY PLAN.

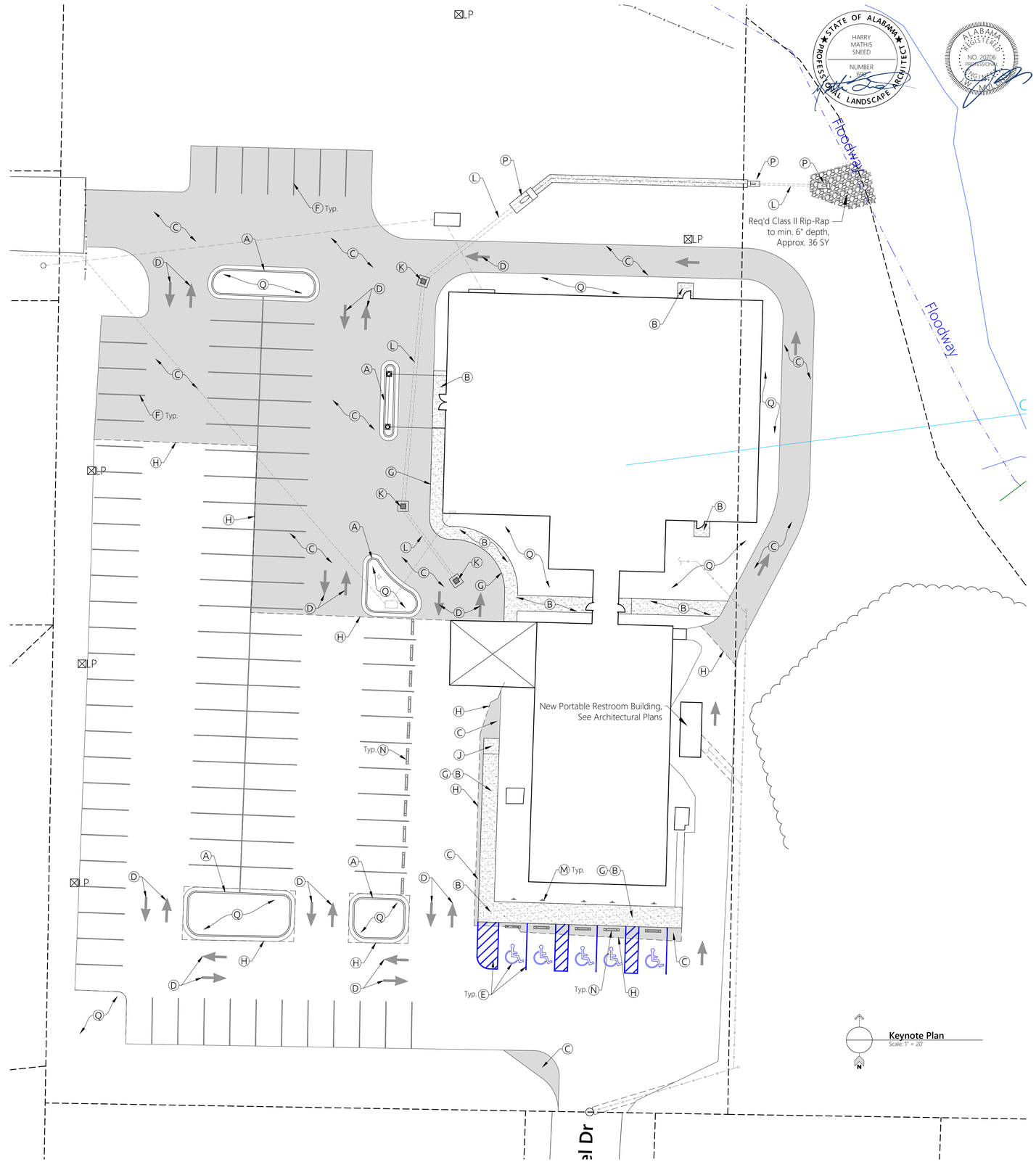

Keynote Plan
Scale: 1" = 20'

STATE OF ALABAMA
HARRY MATHIS SNEED
NUMBER 6[illegible]
PROFESSIONAL LANDSCAPE ARCHITECT

ALABAMA REGISTERED PROFESSIONAL ENGINEER
NO. 20706

REVISIONS
DATE: ---
DATE: ---
DATE: ---
DATE: ---
DATE: ---
DATE: ---
DATE: ---
DATE: ---
DATE: ---
DATE: ---

MULLINS, LLC
CIVIL ENGINEERING, DEVELOPMENT DESIGN
SURVEYING, LANDSCAPE ARCHITECTURE
2101 West Clinton Avenue, Suite 503, Huntsville, AL 35805
(256) 690-5312

Plan Set Title

Union Grove Church Expansion

Huntsville, AL

PREPARED FOR: Union Hill Church

Keynote Plan

Job No. **17-139**
Date: **2018 3/02**
Drawn By: **JLH**
Checked By: **HMS**

SHEET NUMBER
C2
Sheet **2** of **6**

Floodplain Notes:

1. The 1 Percent Annual Chance Floodplain and Floodway boundaries and Lettered Cross Section(s) provided by the Federal Emergency Management Agency (FEMA) National Flood Insurance Program (NFIP) as part of a Digital Flood Insurance Rate Map (DFIRM) were obtained from City of Huntsville Planning Department/ Geographic Information System (GIS) Group on September 28, 2017, in State Plane Alabama East Zone NAD 83 coordinates consistent with this drawing. As appropriate, the DFIRM data has been edited by the City GIS Group to reflect Letters of Map Change (LOMCs) published by FEMA.
2. Required Finished Floor Elevation (FFE) and the Lowest Elevation of Equipment/Exposed Utilities, may be determined to be higher than Minimum (Min.) FFE upon permitting of building construction by qualified City of Huntsville Staff. The required survey control/bench mark and datum for such elevations will also be determined upon permitting of building construction by qualified City of Huntsville Staff.
3. There shall be no net filling at any location, permanent or temporary, of any kind (including but not limited to soils, pond construction, pavement sections, and stockpiled materials) nor placement or construction of structures of any kind (including but not limited to temporary construction trailers and sanitary & storm sewer structures) above existing grade in the Floodway during the course nor as a result of this or any other development. At the discretion of qualified City of Huntsville Staff and upon completion/finished construction this will have to be certified in a letter by a Professionally Licensed Engineer or Surveyor.
4. The 1 Percent Annual Chance Floodplain and Floodway Boundaries and Base Flood Elevations (BFEs), which are used to determine Min./Required FFE and the Lowest Elevation of Equipment/Exposed Utilities, are subject to change by FEMA, including at the request of others. Any more restrictive Floodplain related changes subsequent to approval of this drawing and any associated plan set will be used for regulatory purposes.

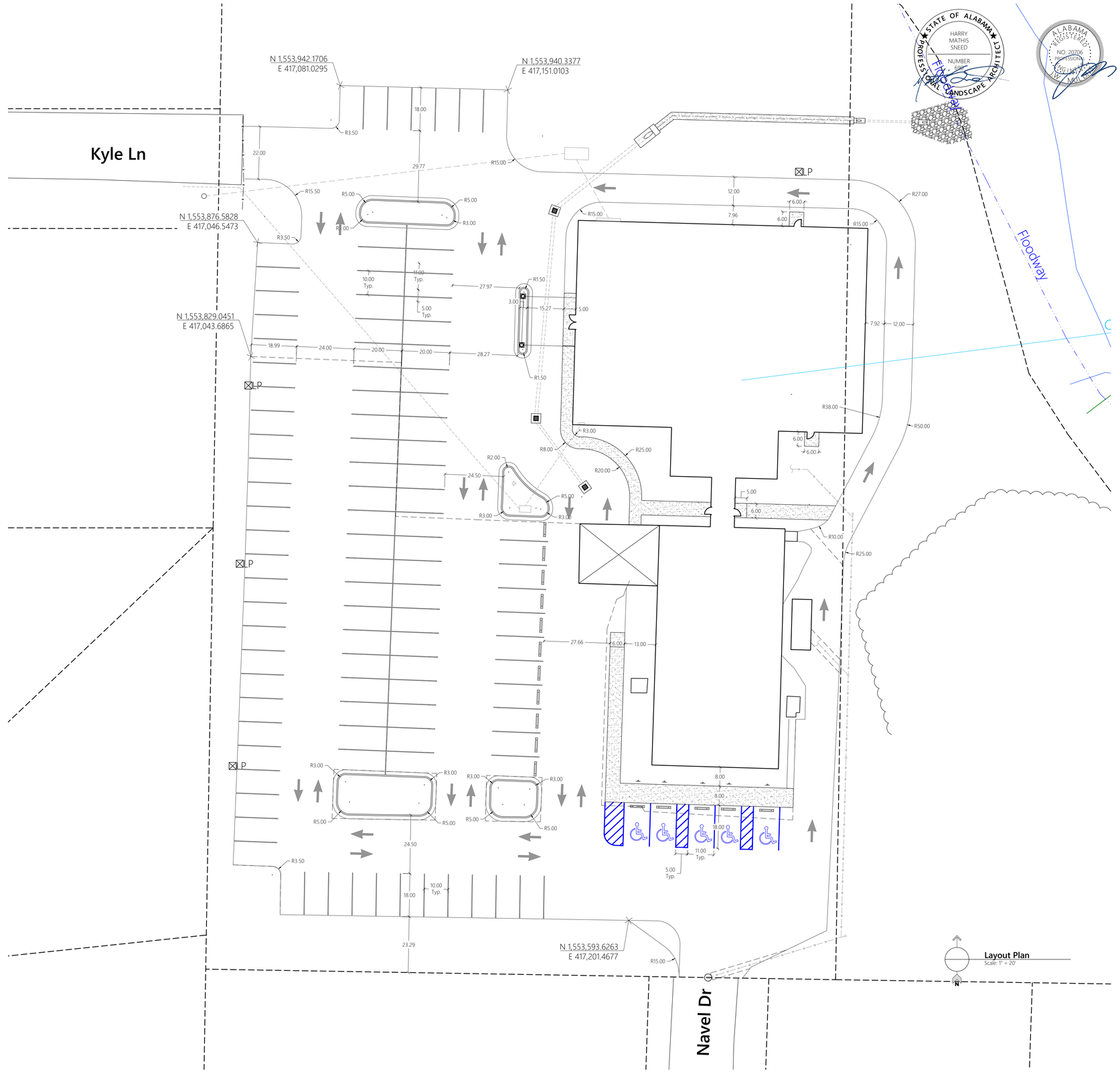

REVISIONS

DATE: ---
DATE: ---
DATE: ---
DATE: ---
DATE: ---
DATE: ---
DATE: ---
DATE: ---
DATE: ---

MULLINS, LLC
CIVIL ENGINEERING, DEVELOPMENT DESIGN
SURVEYING, LANDSCAPE ARCHITECTURE
2101 West Clinton Avenue, Suite 503, Huntsville, AL 35805
(256) 690-5312

Plan Set Title

Union Grove Church Expansion

Huntsville, AL

PREPARED FOR: Union Hill Church

Layout Plan

Job No. **17-139**
Date: **2018 3/02**
Drawn By: **JLH**
Checked By: **HMS**

SHEET NUMBER

C3

Sheet **3** of **6**

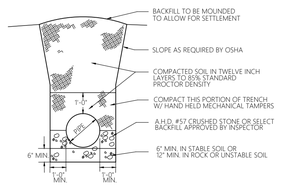

NON-TRAFFIC AREAS

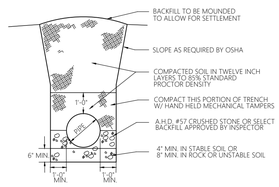

NON-TRAFFIC AREAS

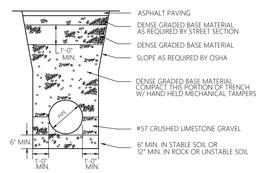

TRAFFIC AREAS

Storm Pipe Bedding
NOT to Scale

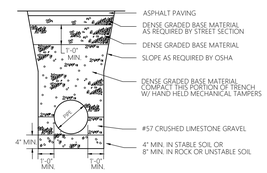

TRAFFIC AREAS

Sanitary Trunk/Lateral Bedding
NOT to Scale

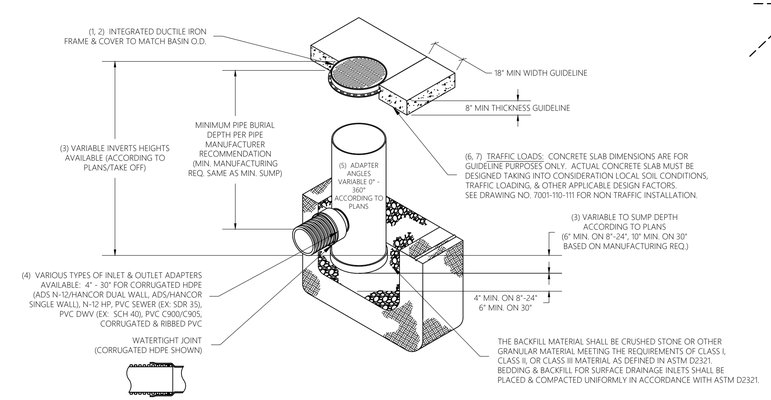

1 - 8" - 30" SOLID COVERS SHALL BE DUCTILE IRON PER ASTM A536 GRADE 70-50-05.
2 - 12" - 30" FRAMES SHALL BE DUCTILE IRON PER ASTM A536 GRADE 70-50-05. 8" & 10" SOLID COVERS FIT DIRECTLY ONTO DRAIN BASINS WITH THE USE OF A PVC BODY TOP. SEE DRAWING NO. 7001-110-045.
3 - DRAIN BASIN TO BE CUSTOM MANUFACTURED ACCORDING TO PLAN DETAILS. RISERS ARE NEEDED FOR BASINS OVER 84" DUE TO SHIPPING RESTRICTIONS. SEE DRAWING NO. 7001-110-065.
4 - DRAINAGE CONNECTION STUB JOINT TIGHTNESS SHALL CONFORM TO ASTM D3212 FOR CORRUGATED HDPE (ADS N-12/HANCOR DUAL WALL), N-12 HP, & PVC SEWER (4" - 24").
5 - ADAPTERS CAN BE MOUNTED ON ANY ANGLE 0° TO 360°. TO DETERMINE MINIMUM ANGLE BETWEEN ADAPTERS SEE DRAWING NO. 7001-110-012.
6 - 12" - 30" SOLID COVERS SHALL MEET H-20 LOAD RATING.
7 - 8" & 10" SOLID COVERS ARE RATED FOR LIGHT DUTY APPLICATIONS ONLY; NO CONCRETE COLLAR NEEDED FOR LIGHT DUTY RATING.

Nyloplast Drainage Basin
NOT to Scale

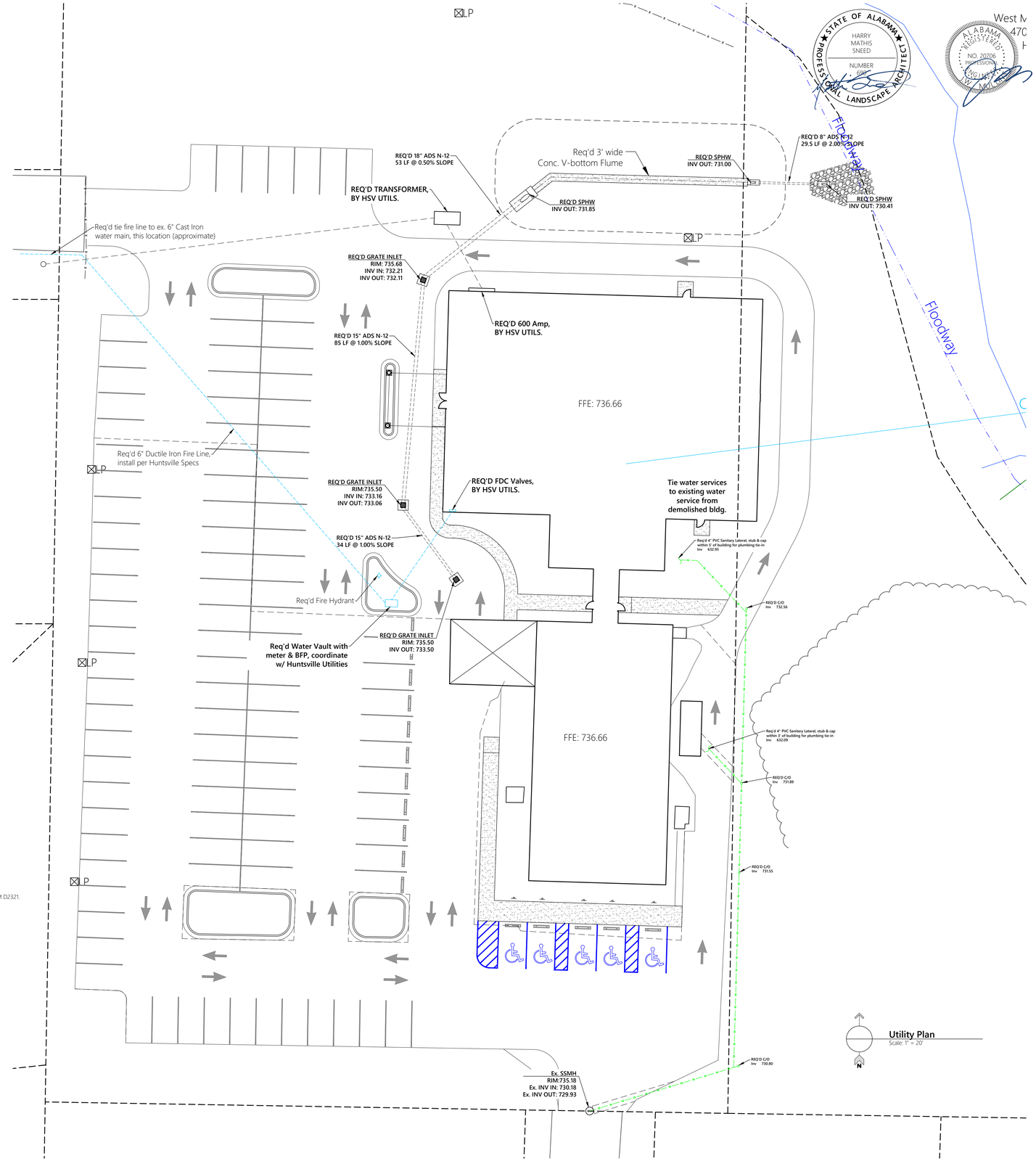

Utility Plan
Scale: 1" = 20'

STATE OF ALABAMA
HARRY MATHIS SNEED
NUMBER 6[illegible]
PROFESSIONAL LANDSCAPE ARCHITECT

ALABAMA REGISTERED PROFESSIONAL ENGINEER
NO. 20706

REVISIONS
DATE: ---
DATE: ---
DATE: ---
DATE: ---
DATE: ---
DATE: ---
DATE: ---
DATE: ---
DATE: ---
DATE: ---

MULLINS, LLC
CIVIL ENGINEERING, DEVELOPMENT DESIGN
SURVEYING, LANDSCAPE ARCHITECTURE
2101 West Clinton Avenue, Suite 503, Huntsville, AL 35805
(256) 690-5312

Plan Set Title

Union Grove Church Expansion

Huntsville, AL

PREPARED FOR: Union Hill Church

Utility Plan

Job No. 17-139
Date: 2018 3/02
Drawn By: JLH
Checked By: HMS

SHEET NUMBER
C4
Sheet 4 of 6

Floodplain Notes:

1. The 1 Percent Annual Chance Floodplain and Floodway boundaries and Lettered Cross Section(s) provided by the Federal Emergency Management Agency (FEMA) National Flood Insurance Program (NFIP) as part of a Digital Flood Insurance Rate Map (DFIRM) were obtained from City of Huntsville Planning Department/ Geographic Information System (GIS) Group on September 28, 2017, in State Plane Alabama East Zone NAD 83 coordinates consistent with this drawing. As appropriate, the DFIRM data has been edited by the City GIS Group to reflect Letters of Map Change (LOMCs) published by FEMA.

2. Required Finished Floor Elevation (FFE) and the Lowest Elevation of Equipment/Exposed Utilities, may be determined to be higher than Minimum (Min.) FFE upon permitting of building construction by qualified City of Huntsville Staff. The required survey control/bench mark and datum for such elevations will also be determined upon permitting of building construction by qualified City of Huntsville Staff.

3. There shall be no net filling at any location, permanent or temporary, of any kind (including but not limited to soils, pond construction, pavement sections, and stockpiled materials) nor placement or construction of structures of any kind (including but not limited to temporary construction trailers and sanitary & storm sewer structures) above existing grade in the Floodway during the course nor as a result of this or any other development. At the discretion of qualified City of Huntsville Staff and upon completion/finished construction this will have to be certified in a letter by a Professionally Licensed Engineer or Surveyor.

4. The 1 Percent Annual Chance Floodplain and Floodway Boundaries and Base Flood Elevations (BFEs), which are used to determine Min./Required FFE and the Lowest Elevation of Equipment/Exposed Utilities, are subject to change by FEMA, including at the request of others. Any more restrictive Floodplain related changes subsequent to approval of this drawing and any associated plan set will be used for regulatory purposes.

Buffer Planting Calcs:

Ex.	Existing
EP	Edge of Pavement
FFE	Finish Floor Elevation
FG	Finish Grade
FL	Flowline
H.P.	Highpoint
Inv.	Invert
SW	Sidewakj
TC	Top of Curb

Grading note:

1. Insure that all grading tie-in to existing grade, positive grading, and away from buildings and structures.
2. All ditches and swales, detention ponds, as well as disturbed areas inside Rights-of-Way and drainage easements, are to be fully sodded.
3. An as-built of the detention pond, dimensions of pond outlet structure, and a pond certification letter from the engineer of record will be required prior to a certificate of occupancy being issued.

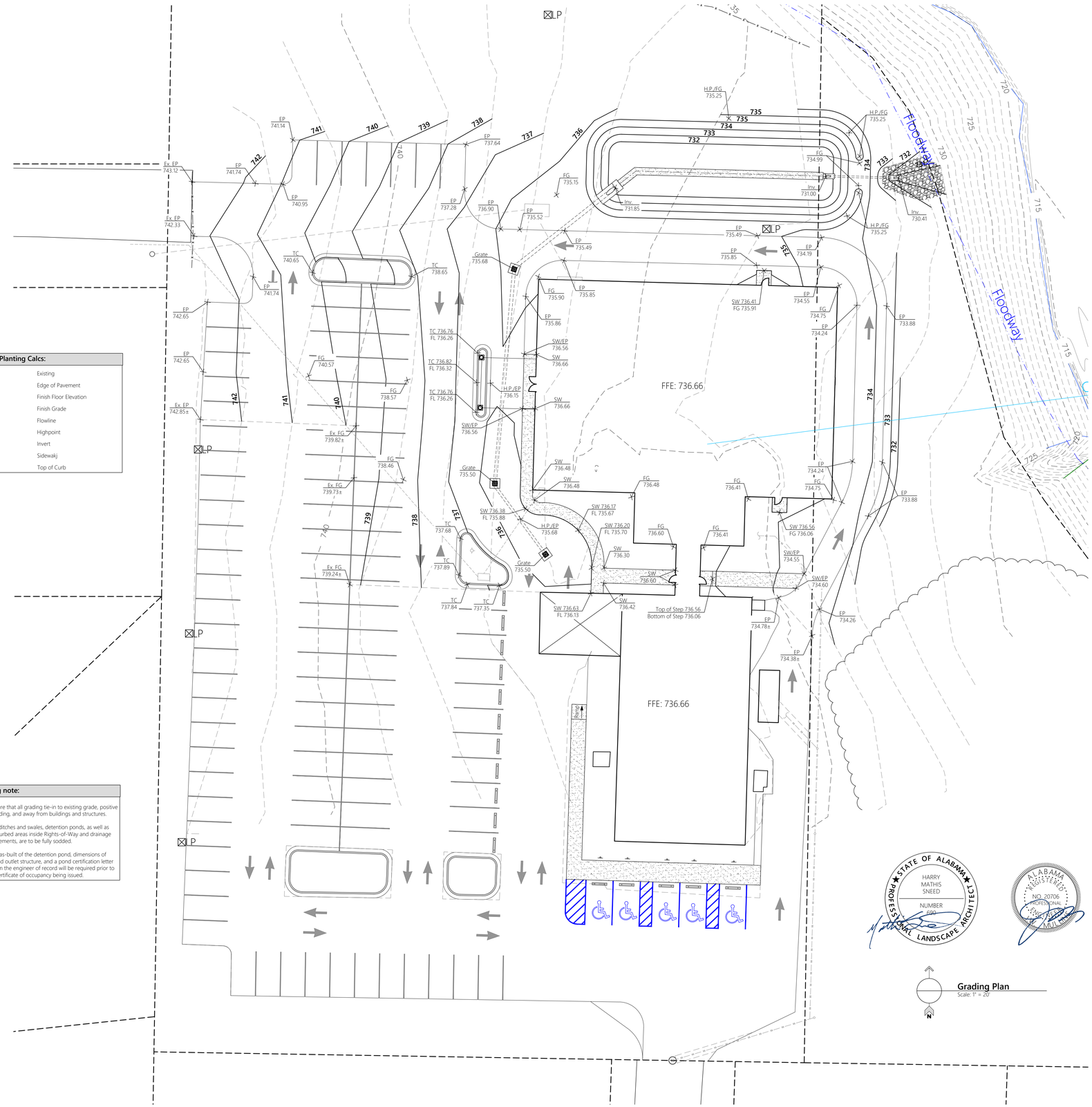

REVISIONS

DATE: ---
DATE: ---
DATE: ---
DATE: ---
DATE: ---
DATE: ---
DATE: ---
DATE: ---
DATE: ---

MULLINS, LLC
CIVIL ENGINEERING, DEVELOPMENT DESIGN
SURVEYING, LANDSCAPE ARCHITECTURE
2101 West Clinton Avenue, Suite 503, Huntsville, AL 35805
(256) 690-5312

Plan Set Title

Union Hill Church Expansion

Huntsville, AL

PREPARED FOR: Union Hill Church

Grading Plan

Job No. **17-139**
Date: **2018 3/02**
Drawn By: **JLH**
Checked By: **HMS**

SHEET NUMBER

C5

Sheet **5** of **6**

Landscape Installation Notes:

1. Coordinate with all trades & verify all utility locations in field prior to beginning of work. Damage to utilities caused by landscape installation shall be repaired at no cost or delay to the owner.
2. Stake tree locations and layout bed lines for approval by owners representative before installation. Adjust staked locations and bed lines as directed.
3. Plants shall be approved by owners representative prior to planting.
4. All landscape materials are subject to approval of the owner's representative at any time during the job.
5. All plants shall meet standards set forth by the American Standards for Nursery Stock.
6. Provide No. 1 grade or better nursery grown stock grown in an approved, recognized nursery in accordance with requirements of applicable standards as noted herein. Provide only healthy, vigorous, stock free of disease, insects, injuries, abrasions crown die-back or disfigurements. All trees shall have a single, straight leader (co-dominate leaders are unacceptable) unless otherwise noted.
7. Trees with narrow crotches of included bark, split bark with inrolled callus, dead, broken, or flush-cut branches will not be accepted. Rootballs shall be firm, neat, slightly tapered and well burlapped. Trees with loose or broken rootballs at time of planting shall be rejected. All trees indicated as B&B/WB in plant schedule shall be balled and burlapped and set in wire basket at time of digging in nursery.
8. Plant material transported in open vehicles / trailers is damaged and subject to rejection.
9. Any rejected plants shall be removed from the site and replaced by acceptable plants meeting drawings notes & specifications at no additional cost to the owner.
10. All plant material, upon delivery to site shall be immediately planted in prepared and prior approved beds and pits. If contractor is unable to plant within 2 hours of plant delivery to site, plants shall be heeled in, the roots kept moist, and plants otherwise protected and maintained until installation at no cost to the owner.
11. All plant material shall be handled by the container or rootball and not by the top growth.
12. Plants injured on job site are not acceptable and shall be replaced by contractor at no additional cost to the owner.
13. All plant material shall be warranted by landscape contractor for a period of one year after final acceptance. Dead or declining plant material shall be rejected and shall be replaced by landscape contractor at no cost to the owner. It is the contractor's responsibility to contact the owner at the end of the warranty period. If the contractor fails to notify and meet with the owner, the warranty period shall continue until the meeting is held, dead or declining plant material is replaced, and the project is accepted by the owner.
14. Stakes and guy wires shall be removed from established plants at the end of the warranty period.
15. All groupings of shrubs (2 or more) shall be mulched and planted in beds as per detail.
16. Mulch for trees and shrub beds shall be pine straw; 3" settled thickness. Mulch shall extend min. 6' around trees.
17. All trees shall be purchased from the following supplier list, all subject to approval & pre- selection by owners representative:

Hunter Trees	Alpine, AL	(866) 348-6837
Select Trees	Bishop, GA	(706) 743-5124
Bold Spring Nursery	Hawkinsville, GA	(478) 783-4975

18. Finish grade shall be approved by engineer and owners representative. All weeds shall be sprayed then removed prior to planting, seeding and or sodding.
19. Soil mix for upper 8" of shrub planting beds shall be:
    2 part approved topsoil
    2 parts native soil
    3 lb/100 square feet cotton seed meal

    Thoroughly mix by use of rotary hoe type tiller or other suitable equipment which will give an even mix of soil, fertilizer, and sphagnum. Final surface of the area shall be reasonably smooth, free of weeds, roots, rocks and other debris to the satisfaction of the engineer.
20. All areas designated to receive solid sod shall be planted with Tifton Bermuda over raked and fine-graded finish grade. Full, consistent stand of turf shall be established in all areas designated, prior to landscape acceptance.
21. Contractor shall verify Ex. Landscaping does not interfere with ex. water vaults, fire hydrants, and FDCs. Coordinate with Landscape Architect prior to any such modifications to ex. landscaping."

Property Notes

Property Zoning: C1

All Adjacent Properties Zoned: C1

Property Owners: Mozi America, Inc.

Developers: Mozi America, Inc.

Plan Developed by: Mathis Sneed, PLA, ASLA
Landscape Architect
Mullins, LLC

Site Landscaping Calculations:

Zoning:	R1B (Residence)
Total Parking Spaces:	106
Total PVA Area:	56,816 sf
Interior Landscaping:	Interior Req'd = PVA Area x [1.826 + (0.00435 x PS)] / 100 1,300 SF Req'd 7 Trees & 28 shrubs req'd 561 SF provided 7 Trees & 33 shrubs provided
Perimeter Landscaping:	1155 LF 23 Trees & 138 shrubs req'd 12+ Ex. Trees & 7 Ex. shrubs provided 148 shrubs provided

Plant List

Key	*Scientific name*	Common Name	Size	Condition	Notes
Trees					
AS	*Acer saccharum 'Legacy'*	Legacy Sugar Maple	3.0" Cal.	B&B / WB	Full & Matched
Shrubs					
LE	*Loropetalum chinense 'Shang-white'*	Emerald Snow Loropetalum	3 Gall Min	Container	Full & Matched
LR	*Loropetalum chinense 'Shang-red'*	Red Diamond Loropetalum	3 Gall Min	Container	Full & Matched
MC	*Muhlenbergia capillaris 'Lenca'*	Royal Mist Pink Muhly Grass	3 Gall Min	Container	Full & Matched

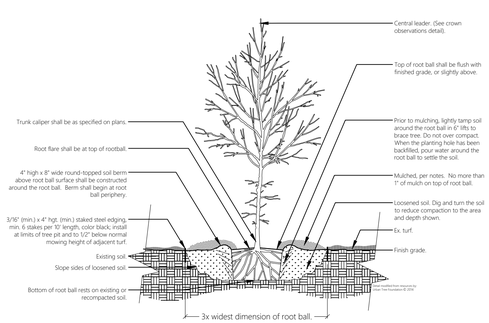

Tree Planting Detail
NOT to Scale

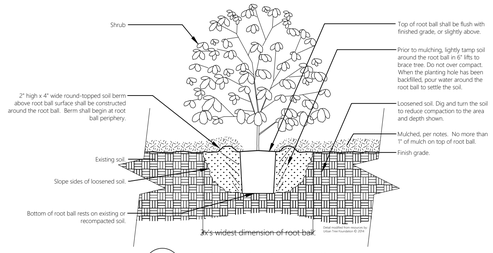

Shrub Planting Detail
NOT to Scale

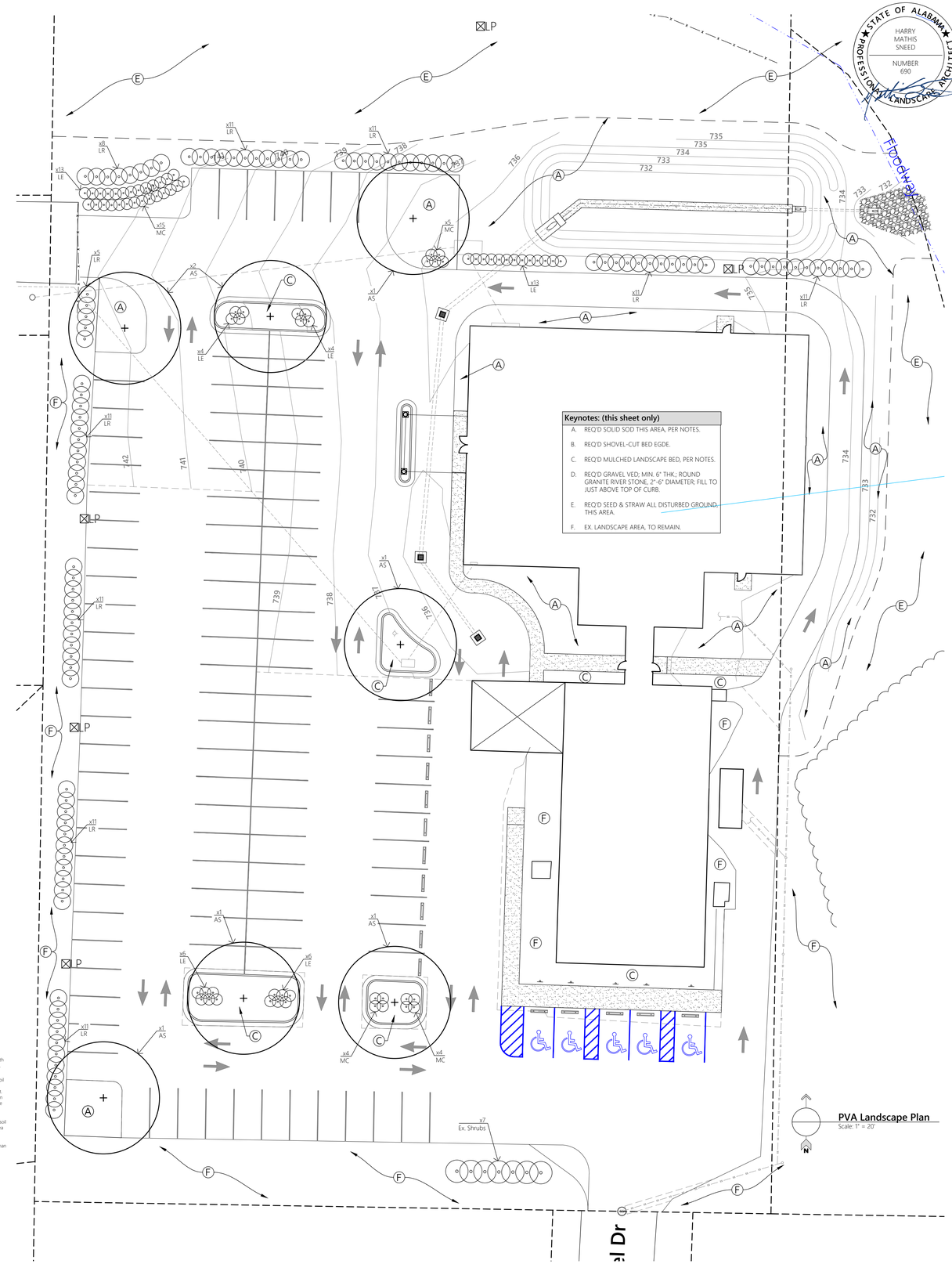

STATE OF ALABAMA
PROFESSIONAL LANDSCAPE ARCHITECT
HARRY MATHIS SNEED
NUMBER 690

REVISIONS
DATE: ---
DATE: ---
DATE: ---
DATE: ---
DATE: ---
DATE: ---
DATE: ---
DATE: ---
DATE: ---
DATE: ---

MULLINS, LLC
CIVIL ENGINEERING, DEVELOPMENT DESIGN
SURVEYING, LANDSCAPE ARCHITECTURE
2101 West Clinton Avenue, Suite 503, Huntsville, AL 35805
(256) 690-5312

Plan Set Title

Union Hill Church Expansion

Huntsville, AL

PREPARED FOR: Union Hill Church

PVA Landscape

Job No. 17-139
Date: 2018 3/02
Drawn By: JLH
Checked By: HMS

SHEET NUMBER
C6
Sheet 6 of 6

KEY PLAN

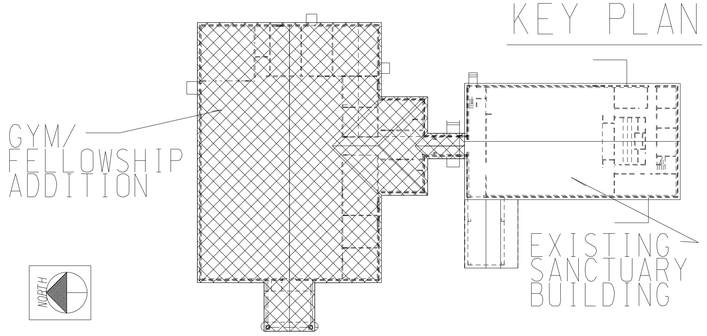

VICINITY MAP

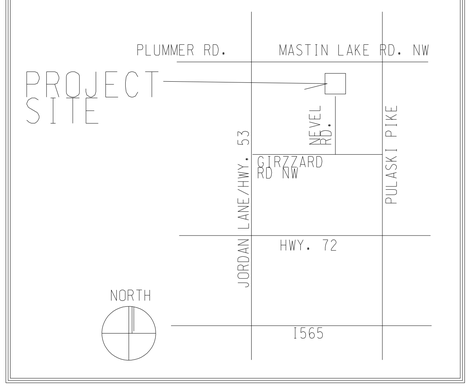

GENERAL CONTRACTOR:
BOYETT CONSTRUCTION
WILLARD BOYETT
256-974-6750; WBOYETT@BOYETTCONSTRUCTION.NET

ARCHITECT:
THE DESIGN FIRM; ANITA DENSON
256-318-4690; THEDESIGNFIRM@BELLSOUTH.NET
102 ASHWOOD DR. . DECATUR, AL. 35603

ELECTRICAL ENGINEER:
CLARK RAMSEY, P.E.
256-684-9445; CKRAMSEY@NEHP.NET
8409 GREEN MOSS COURT; OWENS CROSS ROADS, AL. 35763

MECHANICAL ENGINEER:
DAVID ALDRIDGE, P.E.
256-651-4832; DA_1961@LIVE.COM
1891 PAINT ROCK RD, LOT 1; NEW HOPE, AL. 35760

STRUCTURAL ENGINEER:
QUALLS ENGINEERING; GREG QUALLS
PH./FAX: 256-551-0407; GQUALLS@QUALLSENGINEERING.COM
3311 BOB WALLACE AVE, SUITE 201; HUNTSVILLE, AL. 35805

CIVIL ENGINEER:
MULLINS, LLC; MATHIS SNEED
256-690-5312; MATHIS.SNEED@MULLINSLLC.NET
2101 WEST CLINTON AVE., SUITE 503; HUNTSVILLE, AL. 35805

DRAWING INDEX

CODE NOTES:

HUNTSVILLE, AL IS UNDER 2003 INTERNATIONAL BUILDING CODE. HOWEVER, THE STATE OF ALABAMA IS UNDER 2009 INTERATIONAL BUILDING CODE. THE MORE STRINGENT ONE WILL APPLY.

10/23/17: THIS BUILDING SHALL BE SPRINKLERED AT ADDITION NORTH OF DOOR 102.

THIS IS NON-SEPARATED MIXED OCCUPANCIES: A3 ASSEMBLY; E- EDUCATIONAL AND B-BUSINESS.

THIS PROJECT CONSISTS OF A 1 STORY WOOD FRAMED BRICK-VENEER ADDITION THAT WILL BE NON-SEPARATED MIXED OCCUPANCY BUILDING. THE ROOF SHALL BE ASPHALT FIBERGLASS SHINGLES WITH PREFABRICATED WOOD TRUSSES.

THE ADDITION WILL BE SEPARATED FROM THE EXISTING WITH 2 HOUR FIRE WALL THAT CONNECTS EXISTING. THE FIRE WALL THAT CONNECTS THE EXISTING AND THE ADDITION WILL BE 2 HR. WITH 90 MIN. DOOR/FRAME ASSEMBLY. THE 2 HOUR FIRE WALL AND DOOR ASSEMBLY (90 MIN.) IS A HORIZONTAL EXIT.

10/23/17: THE BUILDING SHALL BE SPRINKLERED. ALL FIRERATINGS EXCEPT AT 2 HR. WALL AT DOOR 102 AND VESTIBULE 101 SHALL BE DELETED. THE VESTIBULE (101) SOUTH OF 2 HR. WALL CONNECTOR SHALL HAVE 1 HR. RATED WALL AT EXISTING WALL AND 1 HR. RATED CEILING. THE EXISTING PAIR OF DOORS ON NORTH SIDE OF THE EXISTING BUILDING SHALL BE CHANGED TO 20 MIN. DOOR/FRAME ASSEMBLY AND THE WALL SHALL HAVE 2 LAYERS OF 5/8" TYPE "X" GYP. BD. ON NEW SIDE TO MAKE IT 1 HOUR RATED ASSEMBLY.

THE DESIGN FIRM

STATE OF ALABAMA
ANITA JOHNSON DENSON
3519
10/23/17
REGISTERED ARCHITECT

GYMNSIUM/FELLOWSHIP HALL ADDITION FOR
UNION HILL CUMBERLAND PRESBYTERIAN CHURCH
IN AMERICA
3126 NEVEL DR., HUNTSVILLE, AL. 35810

ANITA J. DENSON - ARCHITECT . 102 ASHWOOD DRIVE . DECATUR, AL. 35603
adenson09@gmail.com . PHONE: 256-351-0435 . MOBILE: 256-318-4690

SHEET TITLE:
DRAWING INDEX AND NOTES

DATE	DRAWN BY
9/5/17	

REVISIONS
10/23/17

SHEET	OF
A1	9

10/23/17 REVISED:
TYPE I HOOD WITH AUTOMATIC FIRE-EXTINGUISHING SYSTEM ABOVE RANGE/OVEN UNIT

10/23/17: NO FIRE RATINGS IN ROOM 106 OR 105 DUE TO SPRINKLER NOW.

10/23/17 REVISION: PORTABLE RR BLDG. SHALL BE LOCATED EAST OF EXISTING BLDG. AND SET ON EXIST. PAVEMENT. IT SHALL HAVE ALL REQUIRED PERMITS AND UTILITY CONNECTIONS AS PER ALL APPLICABLE CODES AND ORDINANCES.

FIELD VERIFY ALL EXISTING CONDITIONS AND DIMENSIONS.

. THE EXTERIOR WILL MEET THE CURRENT AMERICAN WITH DISABILITIES ACT REQUIREMENTS FOR ACCESSIBLE ENTRANCE TO THE BUILDING. SIDEWALK RAMPS, PARKING SPACES AND DOORS SHALL ALL MEET ADA REQUIREMENTS.
THE INTERIOR RESTROOMS WILL ALSO MEET ADA REQUIREMENTS INCLUDING PLUMBING FIXTURES,
HANDRAILS, MIRRORS AND OTHER TOILET ACCESSORIES. H.C. STALLS AND RESTROOMS COMPLETE WITH GRAB BARS AND OTHER TOILET ACCESSORIES TO MEET ALL REQUIREMENT TOILET ACCESSORIES TO MEET ALL REQUIREMENTS HEIGHTS AND CLEARANCES.

MECH. UNITS IN ATTIC ABOVE THIS AREA - SEE SHEET A6 FOR PLAN AND SEE MECHANICAL DRAWINGS

10/23/17: DOOR 106B IS DELETED DUE TO BDLG BEING SPRINKLERED. NO LANDING NOW EITHER.

EXIT ONLY DOOR FOR CHOIR RM. 5X5 MIN. PAD; STAIRS IF REQUIRED

85'-0" | 37'-0" | 31'-0" | 25'-2" | 7'-3" | 14'-9" | 14'-9½" | 21'-2½"

RANGE/OVEN & HOOD | MICRO | ICE WITH DRAIN AND WATER | ICE | SINK | WORK TABLE | WARMING KITCHEN 109 | 10' X 4' PASSTHRU WITH COILING SHUTTER | PANTRY 10 | REF | WH | FRZR | REF | JAN. 108 | MOP SINK | LADDER FOR ATTIC ACCESS | CLASSRM. 107 | CLASSRM. 106 | 17'+/- H 2X6" BEARING WALL FOR TRUSSES | CHOIR ROOM 105

28'-4" | 25'-8" | 14'-4" | 23'-6" | 9'-2" | 5½" | 19'-9" | 23'-6" | 20'-8" | 20'-8" | 28'-8"

NEW | EXIST

REPLACE EXIST DOOR AND FRAME WITH 20 MIN. RATED ASSEMBLY

PORTABLE RR. BLDG.

HVAC

EXISTING RAMP

EXIT ONLY INSUL. H.M. DOOR WITH 6X6 CONC. PAD OUTSIDE OF DOOR. VERIFY IF STEPS ARE NEEDED OR NOT.

FFE: 736.66

OFFICE 112 | 14'-5½" | 6'-4" | 17'-4"

2 HR. FIREWALL WITH 90 MIN. DOOR/FRAME ASSEMBLY

BABY CHG | MEN RR 104 | CLASSRM. 113 | 14'-0" | 3½" | 8'-5½"

EXISTING AUDITORIUM

REPLACE AND/OR REPAIR EXISTING FLOOR AND WALL FINISHES IF DAMAGED DURING CONSTRUCTION OF ADDITION AT NEW VESTIBULE

FFE: 736.66 | FFE: 736.66 | FFE: 736.66

OFFICE | PASTOR STUDY | OFFICE | KITCHEN | ORGAN | BAPTISTRY | PIANO | 53'-0"

GYMNASIUM/FELLOWSHIP 111

HALL 102 | EWC (HI/LOW) | VESTIBULE 101 | 10'-0"

1 HR. WALL AND CEILING ASSEMBLIES IN VESTIBULE

103 WOMEN RR | FD | BABY CHG | 15'-5"

12' H 2X6" BEARING WALL FOR TRUSSES | 16'+ H 2X6" BEARING WALL FOR TRUSSES | 12' H 2X6" BEARING WALL FOR TRUSSES

CONF. RM. 114 | 28'-8¼" | 16'-6" | 8'-9½"

CLASSROOM | CLASSROOM

INSUL. H.M. DOOR WITH 6X6 CONC. PAD OUTSIDE OF DOOR. VERIFY IF STEPS ARE NEEDED OR NOT.

100'-0"

HVAC

REGULATION SIZE HIGH SCHOOL BASKETBALL / VOLLEYBALL COURT

12' HIGH BEARING WALLS (TYP.) - SEE STRUCTURAL

OFFICE 115 | 15'-4" | 26'-0"

SECTION AA

A | A

EXIST DRIVE THRU

16'-6" | COMPUTER RM. 116 | 4'-10" | 14'-6" | 4'-1"

42'-6" | 42'-6"

5'-0" | 1" | RISER ROOM 117

30'-6" | 24'-0" | 30'-6" | 20'-8" | 20'-8"

10/23/17 RISER ROOM ADDED DUE TO BLDG. BEING SPRINKLERED.

COVERED DRIVE-THRU 117 | 23'-0" | 14'-9" | 1'-0" | 22'-0" | 20'-4" | 10" | 10"

. NOTES:
. SEE ELECTRICAL FOR EMERGENCY LIGHTS, EXIT SIGNS AND LIGHTS OUTSIDE OF EXITS AS REQUIRED BY ALL APPLICABLE CODES.
. SEE CIVIL FOR FIRE HYDRANTS, GRADING, PAVING AND ALL OTHER SITE INFORMATION.

RENOVATION FLOOR PLAN WITH DIMENSIONS

SCALE: 1/8" = 1'-0"

NORTH

THE DESIGN FIRM

STATE OF ALABAMA
ANITA JOHNSON DENSON
3519
10/23/17
REGISTERED ARCHITECT

GYMNSIUM/FELLOWSHIP HALL ADDITION FOR
UNION HILL CUMBERLAND PRESBYTERIAN CHURCH
IN AMERICA
3126 NEVEL DR., HUNTSVILLE, AL. 35810

ANITA J. DENSON - ARCHITECT . 102 ASHWOOD DRIVE . DECATUR, AL. 35603
thedesignfirm@bellsouth.net . PHONE: 256-351-0435 . MOBILE: 256-318-4690

SHEET TITLE:
RENOVATION FLOOR PLAN WITH DIMENSIONS

DATE	DRAWN BY
9/5/17	

REVISIONS
10/23/17

SHEET	OF
A2	9

. THIS BUILDING SHALL MEET HANDICAPPED ACCESSIBILITY REQUIREMENTS- EXTERIOR AND INTERIOR.

FIELD VERIFY ALL EXISTING CONDITIONS AND DIMENSIONS.

THE DESIGN FIRM

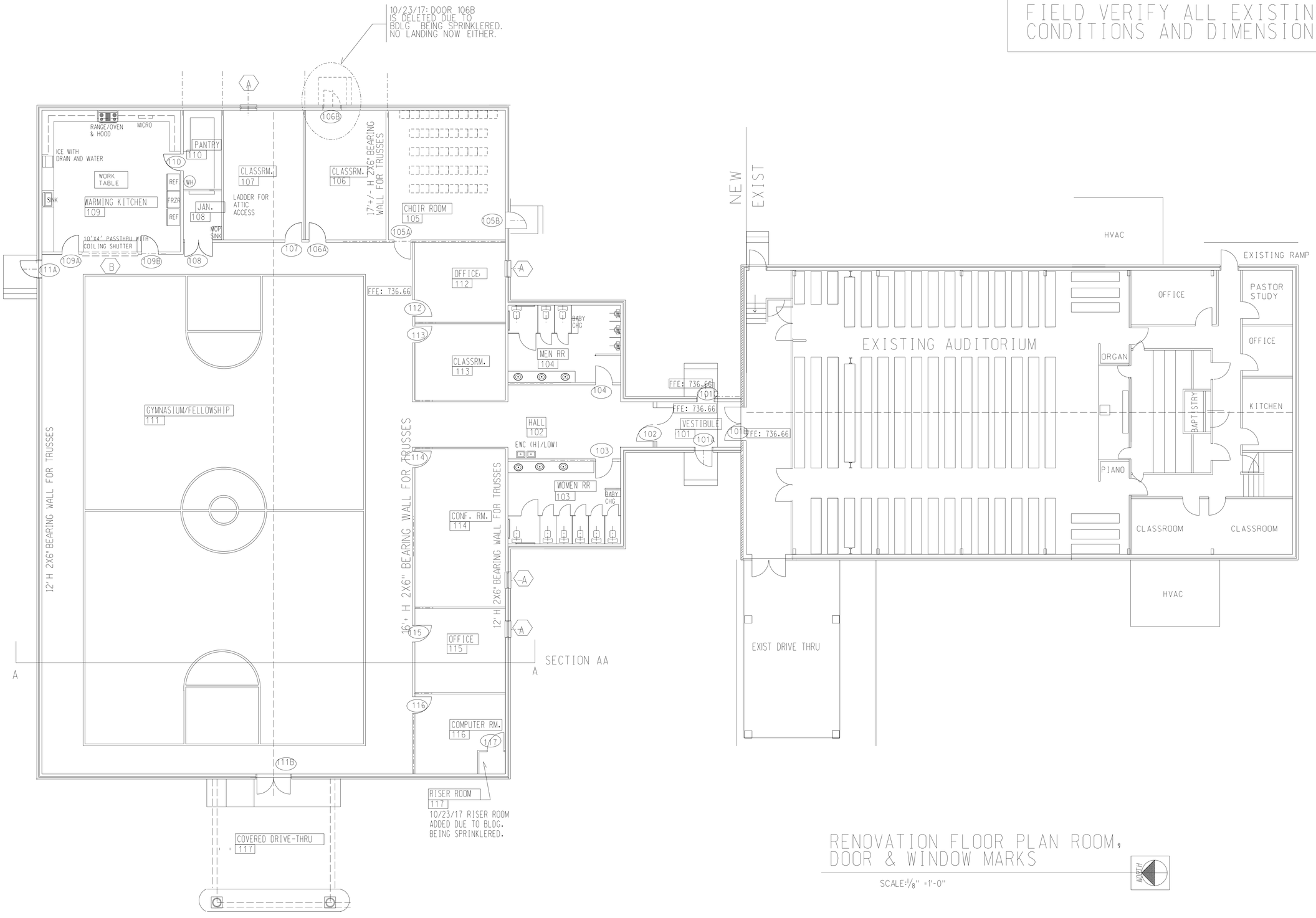

RENOVATION FLOOR PLAN ROOM, DOOR & WINDOW MARKS

SCALE: 1/8" =1'-0"

NORTH

STATE OF ALABAMA
ANITA JOHNSON DENSON
3519
10/23/17
REGISTERED ARCHITECT

GYMNSIUM/FELLOWSHIP HALL ADDITION FOR
UNION HILL CUMBERLAND PRESBYTERIAN CHURCH
IN AMERICA
3126 NEVEL DR., HUNTSVILLE, AL. 35810

ANITA J. DENSON - ARCHITECT . 102 ASHWOOD DRIVE . DECATUR, AL. 35603
thedesignfirm@bellsouth.net . PHONE: 256-351-0435 . MOBILE: 256-318-4690

SHEET TITLE:
RENOVATION FLOOR PLAN ROOM, DOOR & WINDOW MARKS

DATE	DRAWN BY
9/5/17	

REVISIONS
10/23/17

SHEET	OF
A3	9

10/23/17 REVISED:
TYPE 1HOOD WITH AUTOMATIC
FIRE-EXTINGUISHING SYSTEM
ABOVE RANGE/OVEN UNIT

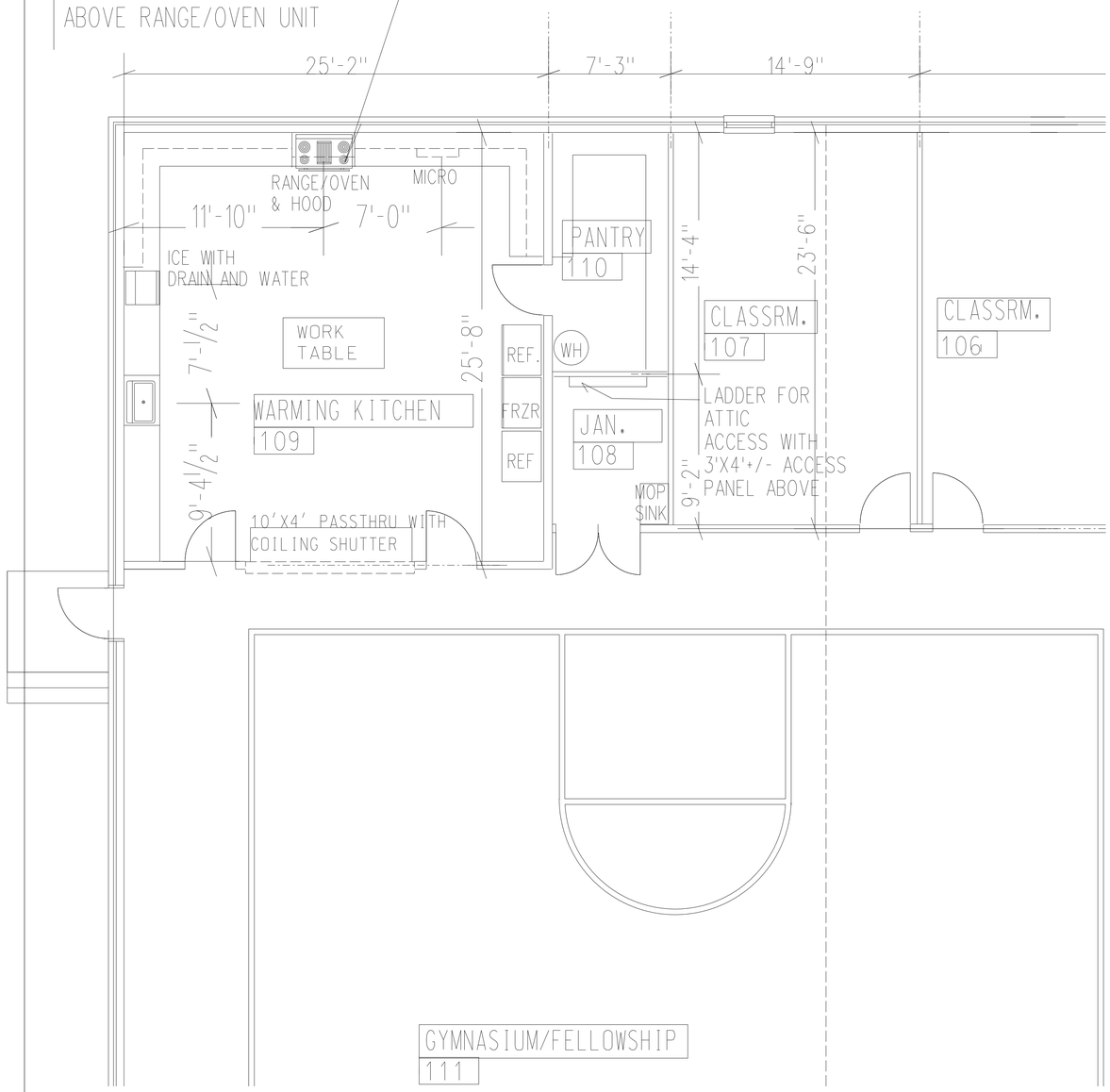

ENLARGED KITCHEN PLAN

SCALE: 1/4" =1'-0"

. THE EXTERIOR WILL MEET THE CURRENT AMERICAN WITH DISABILITIES ACT REQUIREMENTS FOR ACCESSIBLE ENTRANCE TO THE BUILDING. SIDEWALK RAMPS, PARKING SPACES AND DOORS SHALL ALL MEET ADA REQUIREMENTS.
THE INTERIOR RESTROOMS WILL ALSO MEET ADA REQUIREMENTS INCLUDING PLUMBING FIXTURES,
HANDRAILS, MIRRORS AND OTHER TOILET ACCESSORIES. H.C. STALLS AND RESTROOMS COMPLETE WITH GRAB BARS AND OTHER TOILET ACCESSORIES TO MEET ALL REQUIREMENT TOILET ACCESSORIES TO MEET ALL REQUIREMENTS HEIGHTS AND CLEARANCES.

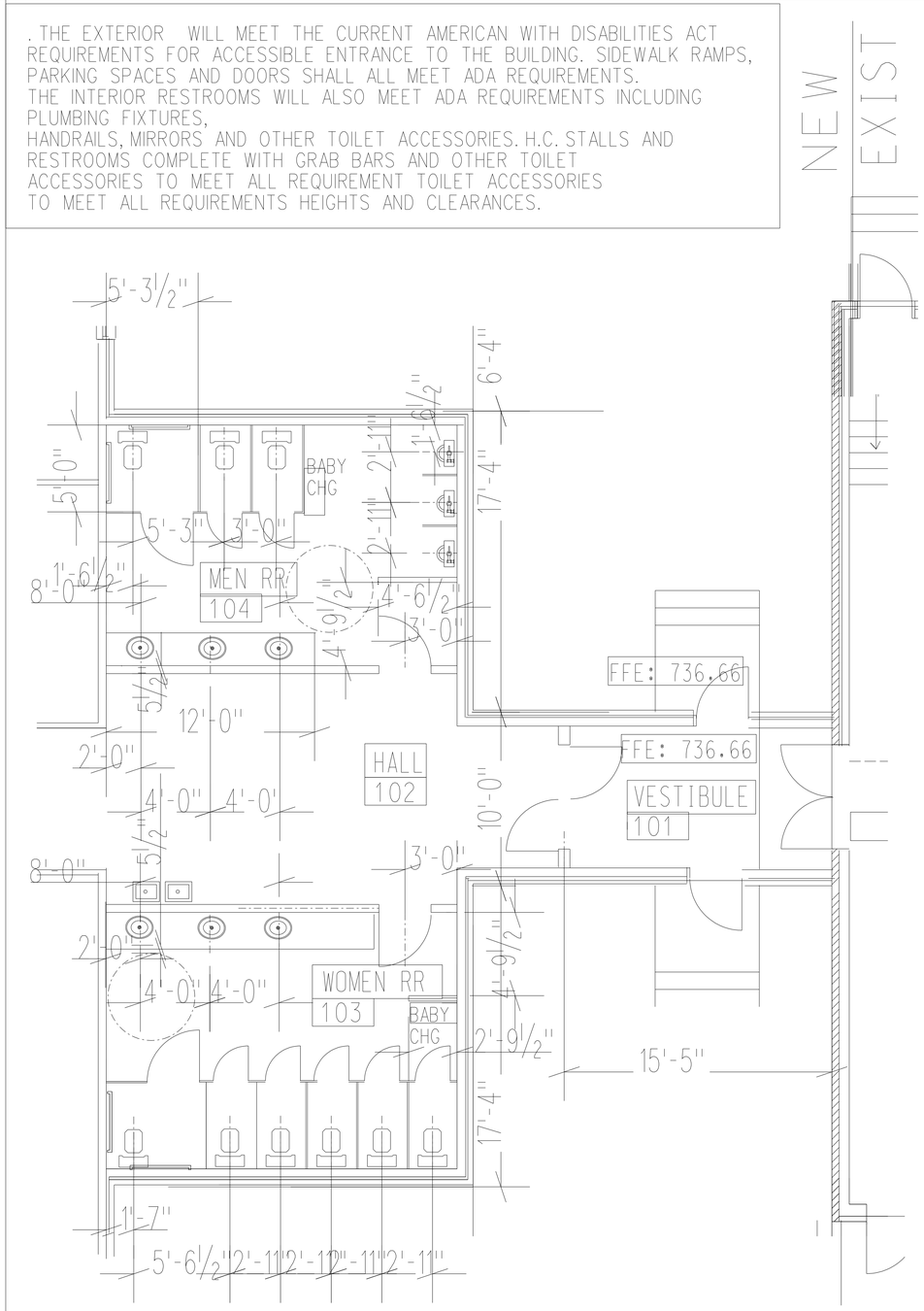

ENLARGED PLAN OF RESTROOMS

SCALE: 1/4" =1'-0"

THE DESIGN FIRM

STATE OF ALABAMA
ANITA JOHNSON DENSON
3519
10/23/17
REGISTERED ARCHITECT

GYMNSIUM/FELLOWSHIP HALL ADDITION FOR
UNION HILL CUMBERLAND PRESBYTERIAN CHURCH
IN AMERICA
3126 NEVEL DR., HUNTSVILLE, AL. 35810

ANITA J. DENSON - ARCHITECT . 102 ASHWOOD DRIVE . DECATUR, AL. 35603
thedesignfirm@bellsouth.net . PHONE: 256-351-0435 . MOBILE: 256-318-4690

SHEET TITLE:
ENLARGED KITCHEN & RESTROOM PLANS

DATE	DRAWN BY
9/5/17	

REVISIONS
10/23/17

SHEET	OF
A4	9

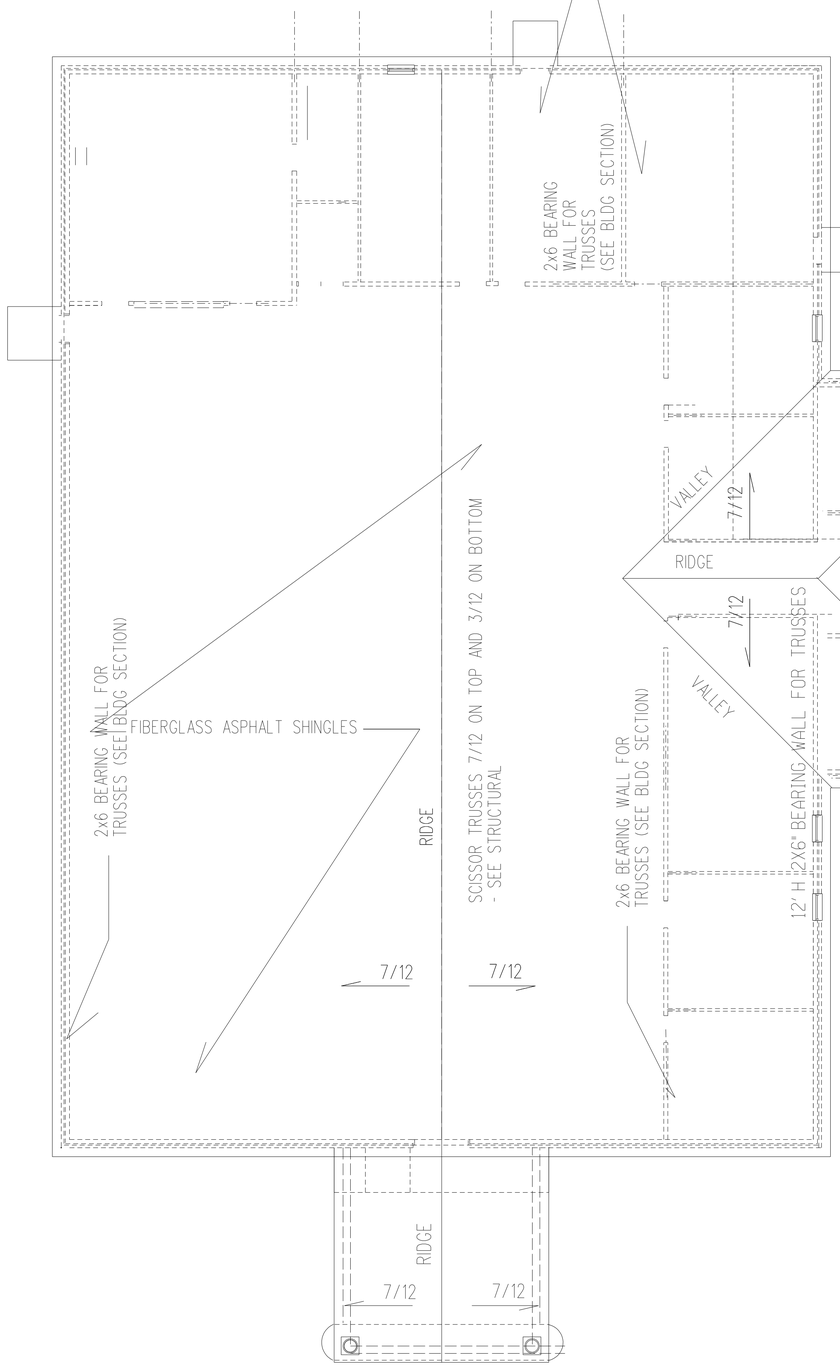

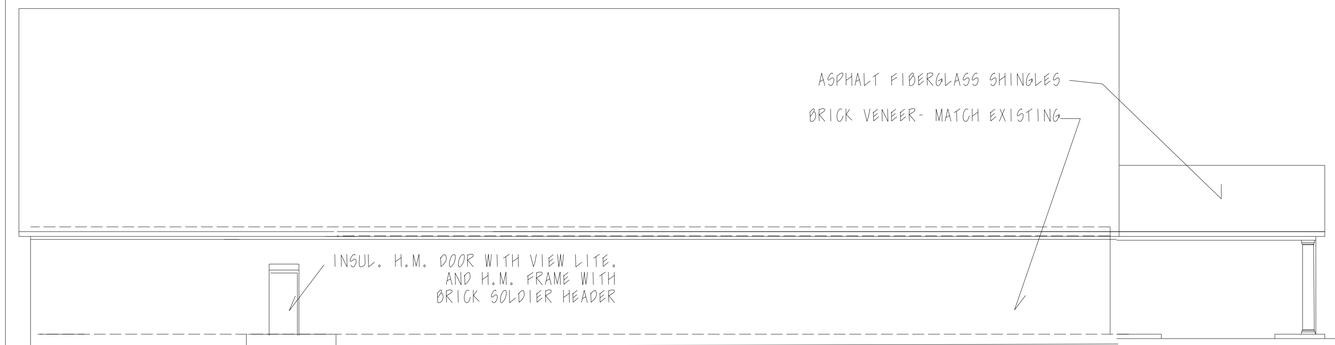

NORTH ELEVATION SCALE: 1/8" =1'-0"

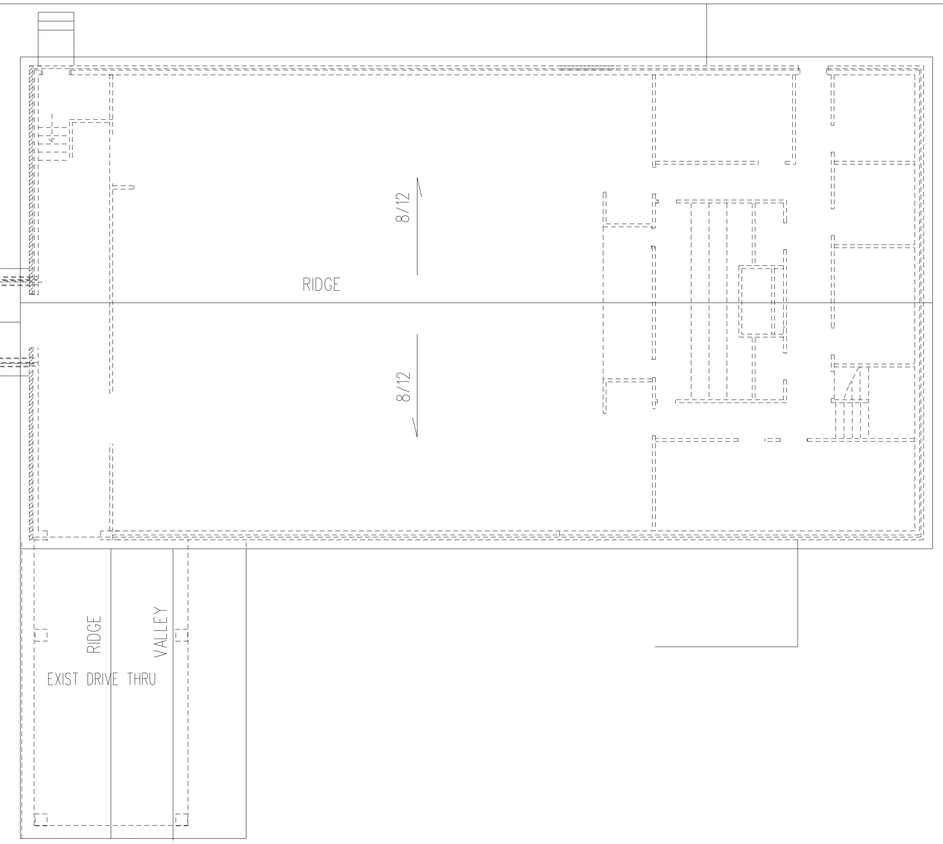

ROOF PLAN

SCALE: 1/8" =1'-0"

THE DESIGN FIRM

STATE OF ALABAMA
ANITA JOHNSON DENSON
3519
10/23/17
REGISTERED ARCHITECT

GYMNSIUM/FELLOWSHIP HALL ADDITION FOR
UNION HILL CUMBERLAND PRESBYTERIAN CHURCH
IN AMERICA
3126 NEVEL DR., HUNTSVILLE, AL. 35810

ANITA J. DENSON - ARCHITECT . 102 ASHWOOD DRIVE . DECATUR, AL. 35603
thedesignfirm@bellsouth.net . PHONE: 256-351-0435 . MOBILE: 256-318-4690

SHEET TITLE:
ROOF PLAN
AND NORTH
ELEVATION

DATE	DRAWN BY
9/5/17	

REVISIONS

SHEET	OF
A5	9

FIELD VERIFY ALL EXISTING CONDITIONS AND DIMENSIONS.

. REFER TO CIVIL ENGINEER'S DRAWINGS FOR EXTERIOR GRADES, SIDEWALKS, PAVING, DRAINAGE, ETC.
. REFER TO STRUCTURAL ENGINEER'S DRAWINGS FOR FOUNDATION AND FRAMING.

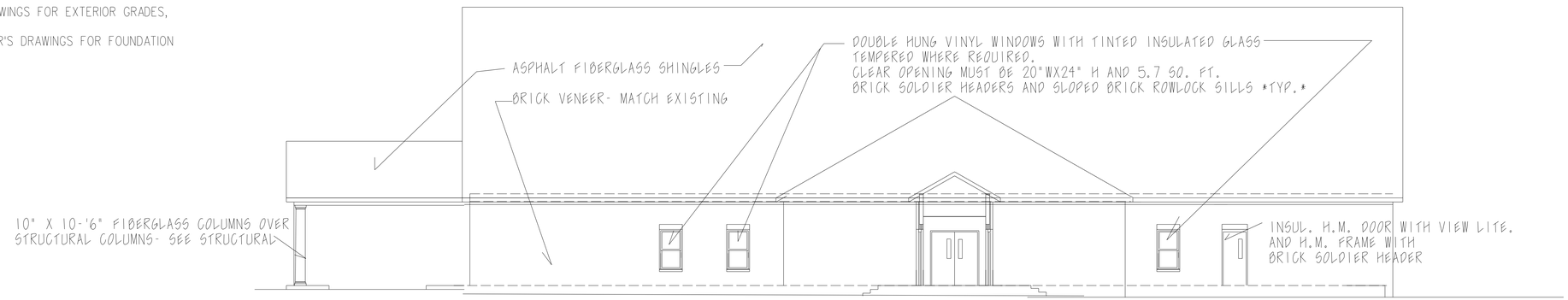

SOUTH ELEVATION/SECTION (THROUGH VESTIBULE)

SCALE: 1/8" =1'-0"

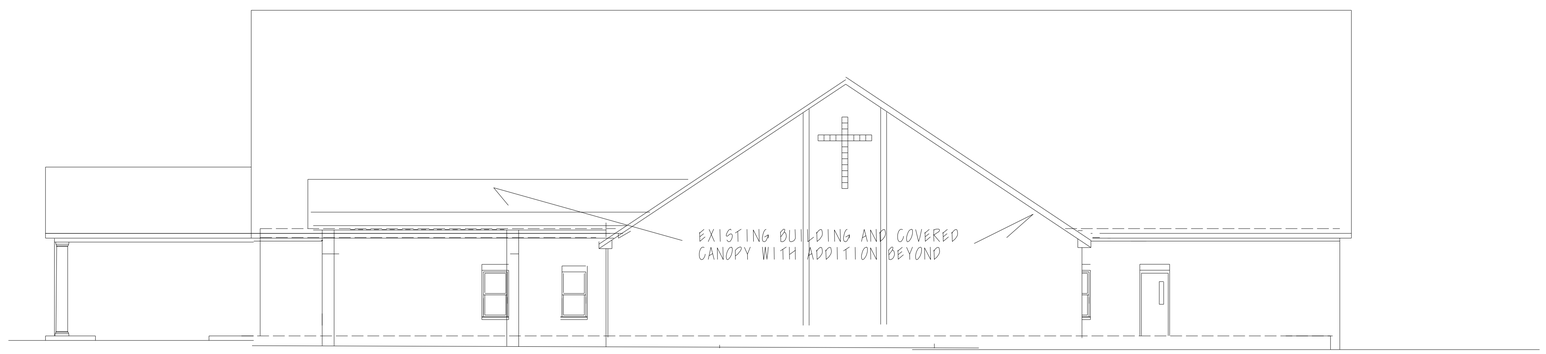

SOUTH ELEVATION LOOKING AT EXISTING SANCTUARY

SCALE: 1/8" =1'-0"

WEST ELEVATION

SCALE: 1/8" =1'-0"

THE DESIGN FIRM

STATE OF ALABAMA
ANITA JOHNSON DENSON
3519
10/23/17
REGISTERED ARCHITECT

GYMNSIUM/FELLOWSHIP HALL ADDITION FOR
UNION HILL CUMBERLAND PRESBYTERIAN CHURCH
IN AMERICA
3126 NEVEL DR., HUNTSVILLE, AL. 35810

ANITA J. DENSON - ARCHITECT . 102 ASHWOOD DRIVE . DECATUR, AL. 35603
adenson09@gmail.com . PHONE: 256-351-0435 . MOBILE: 256-318-4690

SHEET TITLE:
SOUTH ELEVATIONS, & WEST ELEVATION

DATE	DRAWN BY
9/5/17	

REVISIONS

SHEET	OF
A6	9

FIELD VERIFY ALL EXISTING CONDITIONS AND DIMENSIONS.

NOTE: REFER TO CIVIL ENGINEER'S DRAWINGS FOR FINISHED FLOOR ELEVATIONS AND FINISHED GRADES, SIDEWALKS, ETC.

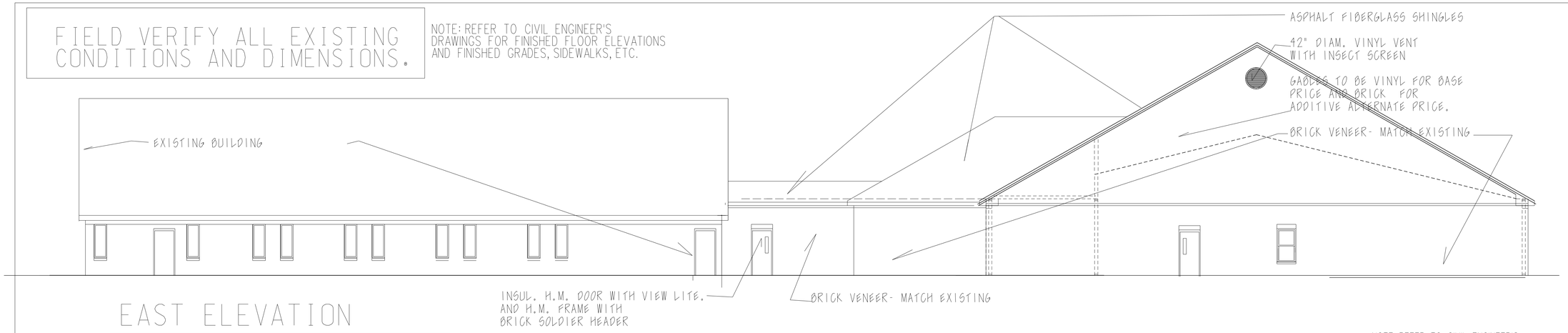

EAST ELEVATION

SCALE: 1/8" =1'-0"

NOTE: REFER TO CIVIL ENGINEER'S DRAWINGS FOR FINISHED FLOOR ELEVATIONS AND FINISHED GRADES, SIDEWALKS, ETC.

PORTABLE RESTROOM MANUFACTURED MOBILE (TRAILER) TO BE LOCATED AS PER OWNER'S DIRECTION. ALL APPLICABLE CODES SHALL BE MET FOR THIS TEMPORARY STRUCTURE.

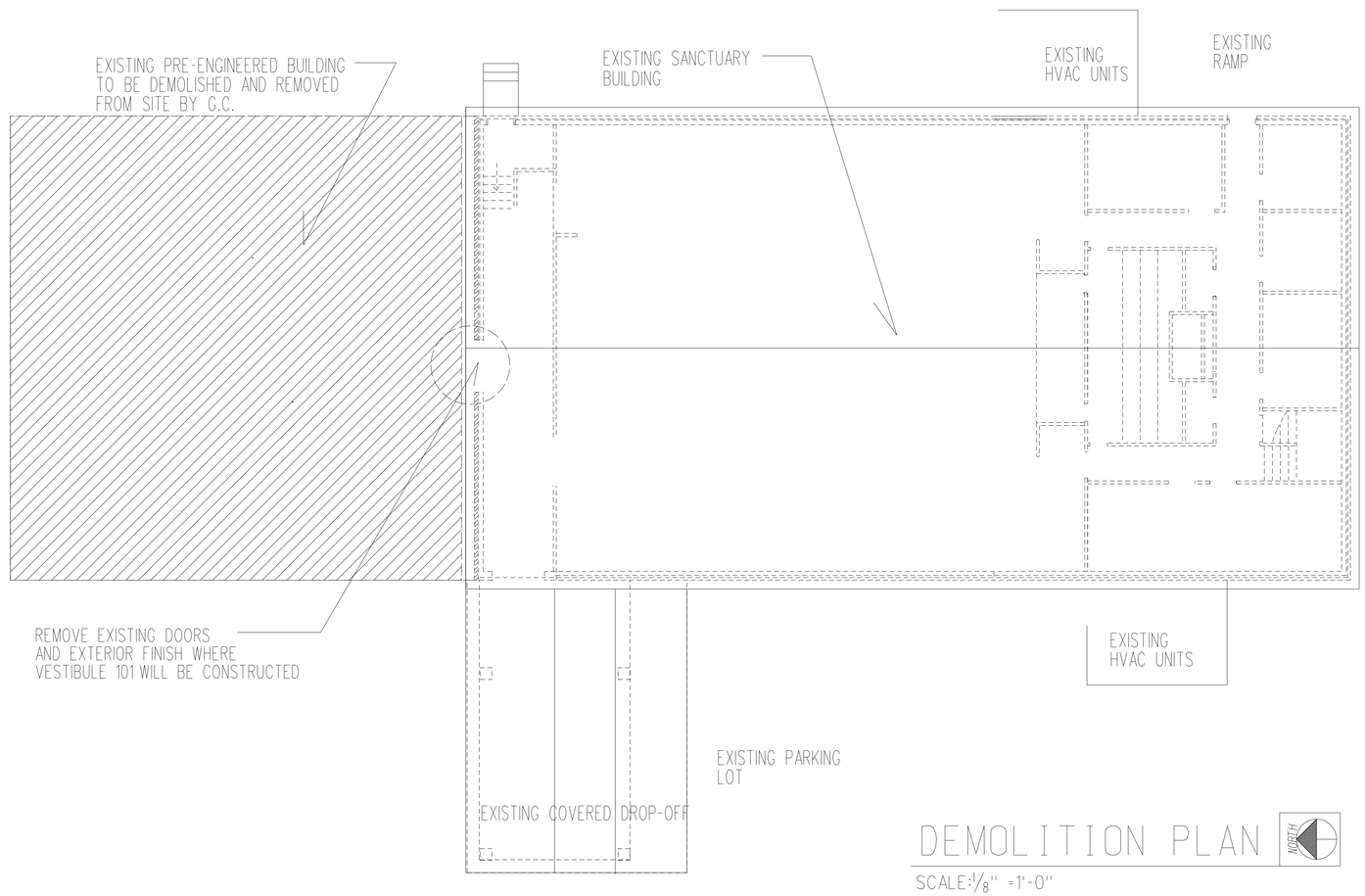

DEMOLITION PLAN

SCALE: 1/8" =1'-0"

DEMOLITION AND CONSTRUCTION NOTES:

. FIELD VERIFY ALL EXISTING CONDITIONS AND DIMENSIONS.
. G.C. SHALL REMOVE EXISTING PRE-ENGINEERED BUILDING NORTH OF EXISTING SANCTUARY BUILDING.
. G.C. SHALL PROVIDE A RESTROOM TRAILER LOCATED AS PER OWNER'S DIRECTIONS AT JOBSITE DURING CONSTRUCTION.
. SEE CIVIL DRAWINGS FOR SITE DEMOLITION AND FOR OTHER SITE INFORMATION FOR ADDITION

THE DESIGN FIRM

STATE OF ALABAMA
ANITA JOHNSON DENSON
3519
10/23/17
REGISTERED ARCHITECT

GYMNSIUM/FELLOWSHIP HALL ADDITION FOR
UNION HILL CUMBERLAND PRESBYTERIAN CHURCH
IN AMERICA
3126 NEVEL DR., HUNTSVILLE, AL. 35810

ANITA J. DENSON - ARCHITECT . 102 ASHWOOD DRIVE . DECATUR, AL. 35603
adensonO9@gmail.com . PHONE: 256-351-0435 . MOBILE: 256-318-4690

SHEET TITLE:
EAST ELEVATION & DEMOMLITION PLAN

DATE	DRAWN BY
9/5/17	

REVISIONS

SHEET A7 OF 9

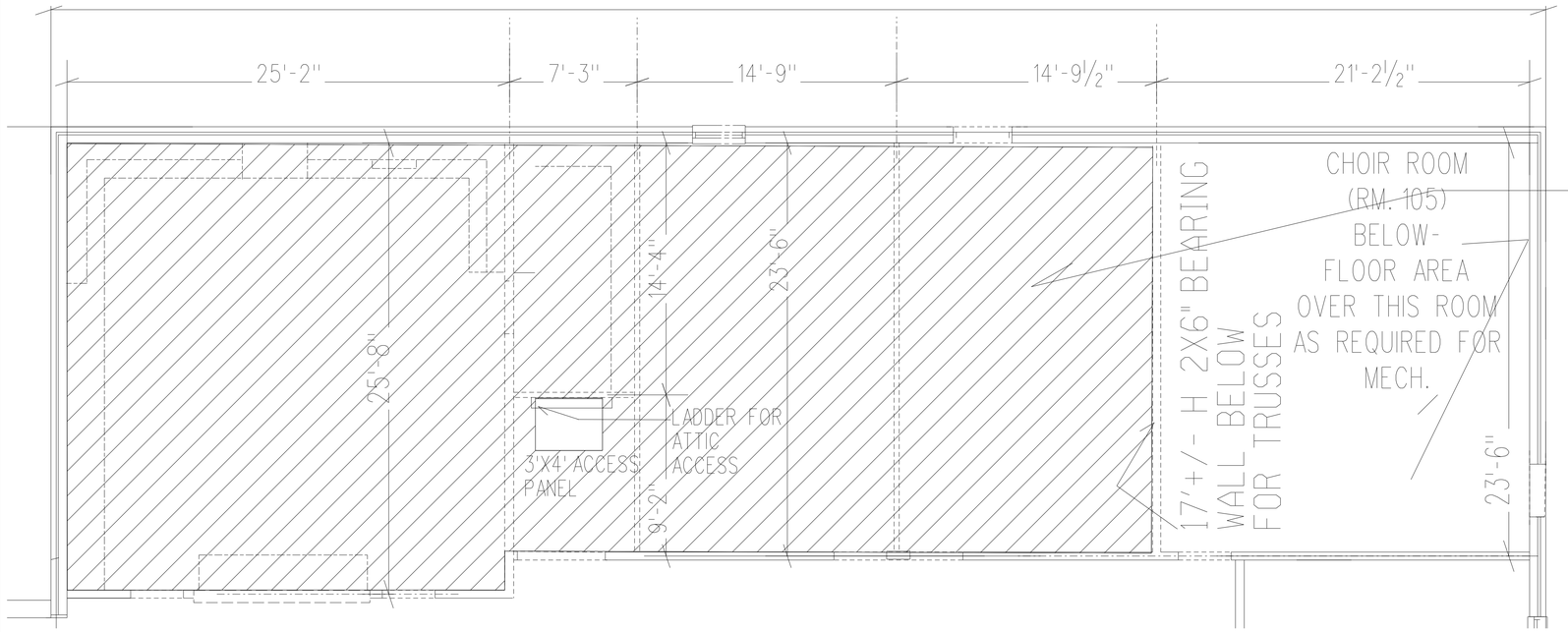

MECHANICAL ATTIC SPACE OVER ROOMS 106, 107, 108, 109, 110). ATTIC SPACE SHALL HAVE ¾" STURDI-FLOOR OR APPROVED EQUAL PLYWOOD FLOOR. PROVIDE FLOOR JOISTS THAT ARE ENGINEERED TO SPAN DIMENSIONS OF ROOMS BELOW. KITCHEN MAY BE BROKEN INTO SMALLER SPANS WITH LVL BEAM OR FLOOR TRUSS. FLOOR AREA ABOVE CHOIR ROOM AS REQUIRED FOR MECHANICAL.

NORTH

RENOVATION MECHANICAL ATTIC PLAN

SCALE: ¼" =1'-0"

MECHANICAL ATTIC SPACE OVER ROOMS ON EAST SIDE OF GYM/FELLOWSHIP HALL. (RMS. 106, 107, 108, 109, 110). ROOMS 106, 107, 108, 109 AND 110 TO HAVE SUSPENDED ACOUSTICAL CEILING AT 9'. CHOIR ROOM (RM. 105) TO HAVE GYP. BD. CEILINGS ON BOTTOM OF ROOF JOISTS.

SEE STRUCTURAL FOR PREFABRICATED WOOD TRUSSES AND OTHER STRUCTURAL FOUNDATION & FRAMING INFORMATION.

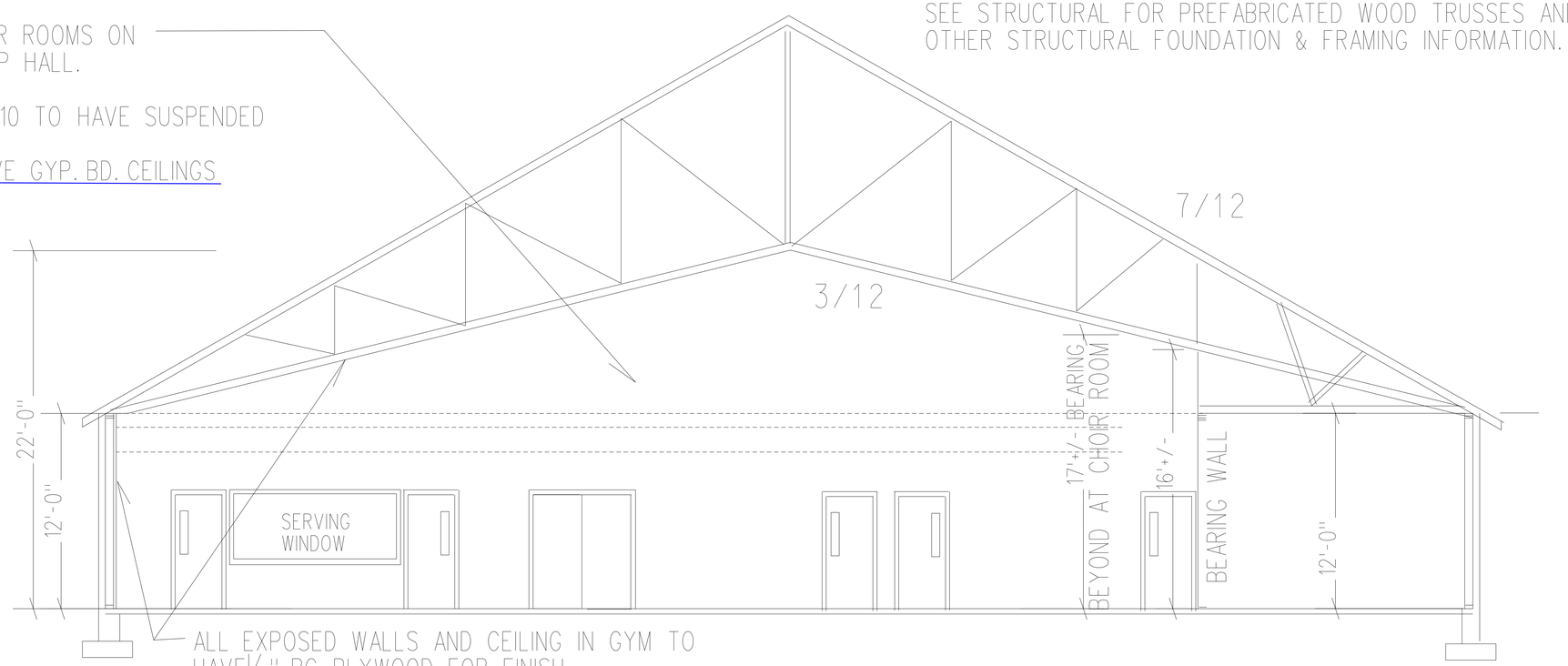

ALL EXPOSED WALLS AND CEILING IN GYM TO HAVE ½" BC PLYWOOD FOR FINISH. (SEALED WITH POLYURETHANE)

BUILDING SECTION A-A LOOKING EAST

SCALE: ¼" =1'-0"

THE DESIGN FIRM

STATE OF ALABAMA
ANITA JOHNSON DENSON
3519
10/23/17
REGISTERED ARCHITECT

GYMNSIUM/FELLOWSHIP HALL ADDITION FOR
UNION HILL CUMBERLAND PRESBYTERIAN CHURCH
IN AMERICA
3126 NEVEL DR., HUNTSVILLE, AL. 35810

ANITA J. DENSON - ARCHITECT . 102 ASHWOOD DRIVE . DECATUR, AL. 35603
thedesignfirm@bellsouth.net . PHONE: 256-351-0435 . MOBILE: 256-318-4690

SHEET TITLE:
BUILDING SECTION & MECH. ATTIC PLAN

DATE	DRAWN BY
9/5/17	

REVISIONS

SHEET	OF
A8	9

DOOR SCHEDULE:
101A: 3'X7' INSUL. H.M. DOOR AND FRAME WITH 6" X33" VIEW LITE; THRESHOLD, WEATHERSTRIPPING; CLOSURE; PANIC HARDWARE; LOCK AS ALLOWED

101B: PAIR OF 3'X7' FLUSH WOOD DOOR AND WOOD FRAME; 20 MIN. RATED DOOR/FRAME ASSEMBLY. CLOSURE; PANIC HARDWARE. THUMB TURN DEADBOLT ON VESTIBULE SIDE.

101C: 3'X7' INSUL. H.M. DOOR AND FRAME WITH 6" X33" VIEW LITE; THRESHOLD; WEATHERSTRIPPING; CLOSURE; PANIC HARDWARE; LOCK AS ALLOWED. OWNER MAY WANT THIS TO BE EXIT ONLY DOOR.

102: PAIR OF 3'X7' INSULATED H.M. DOORS 90 MIN. RATED WITH INSULATED H.M. FRAME AND ALL REQUIRED HARDWARE INCLUDING PANIC HARDWARE

103: 3'X7' FLUSH WOOD DOOR AND H.M. FRAME; CLOSER; NO LATCH; PUSH/PULL; KICKSTAND

104: 3'X7' FLUSH WOOD DOOR AND H.M. FRAME; CLOSER; NO LATCH; PUSH/PULL; KICKSTAND

105A: 10/23/17 REVISED TO NON-RATED DUE TO SPRINKLER.
3'X7' FLUSH WOOD DOOR AND H.M. FRAME; PANIC HARDWARE; CLOSURE; 6X33" VIEW LITE; LOCK AS ALLOWED

105B 3'X7' INSUL. H.M. DOOR AND FRAME; PANIC HARDWARE; CLOSURE; WEATHERSTRIPPING; THRESHOLD; LOCK AS ALLOWED

106A 10/23/17 REVISED TO NON-RATED DUE TO SPRINKLER.
3'X7' FLUSH WOOD DOOR AND H.M. FRAME; 6X33" VIEW LITE; CLASSROOM LOCKSET

106B: 10/23/17 DELETED

107: 3'X7' FLUSH WOOD DOOR AND H.M. FRAME; 6X33 VIEW LITE; CLASSROOM LOCKSET

108: PAIR OF 3'X7' FLUSH WOOD DOORS AND H.M. FRAME; JANITOR LOCKSET; HEADBOLT; FOOTBOLT

109A 3'X7' FLUSH WOOD DOOR AND H.M. FRAME; 6X33 VIEW LITE; LOCKSET

109B: 3X7' FLUSH WOOD DOOR AND H.M. FRAME; 6X33 VIEW LITE; LOCKSET

110 3'X7' FLUSH WOOD DOOR AND H.M. FRAME; PANTRY LOCKSET
111A 3'X7' INSUL. H.M. DOOR AND FRAME; THRESHOLD; WEATHERSTRIPPING; CLOSURE; PANIC HARDWARE; EXIT ONLY DOOR.
111B PAIR OF 3'X7' INSUL H.M. DOOR AND FRAME; THRESHOLD; WEATHERSTRIPPING; CLOSURE; PANIC HARDWARE; LOCKSET ALLOWED FOR THESE DOORS; PANIC HARDWARE WITH HEAD AND FOOTBOLTS ON 1 DOOR; 6X33 VIEW LITES IN EACH DOOR.
112: 3'X7' FLUSH WOOD DOOR AND H.M. FRAME; 6X33 VIEW LITE; LOCKSET
113: 3'X7' FLUSH WOOD DOOR AND H.M. FRAME; 6X33 VIEW LITE; CLASSROOM LOCKSET
114: 3'X7' FLUSH WOOD DOOR AND H.M. FRAME; 6X33 VIEW LITE; LOCKSET
115: 3'X7' FLUSH WOOD DOOR AND H.M. FRAME; 6X33 VIEW LITE; LOCKSET
116: 3'X7' FLUSH WOOD DOOR AND H.M. FRAME; 6X33 VIEW LITE; LOCKSET
117: 3'X7' FLUSH WOOD DOOR AND H.M. FRAME; 6X33 VIEW LITE; JAN. LOCKSET

ALL DOORS, FRAMES AND HARDWARE SHALL MEET ALL APPLICABLE CODES.

10/23/17 REVISED: DOOR 106 B DELETED; DOORS 112-117 HAVE BEEN ADDED TO SCHEDULE.

FINISHES:
101-VESTIBULE; VCT; RUBBER BASE; PAINTED GYP. BD. WALLS; 1 HR. RATED CEILING ABOVE SUSP. ACOUST. CEILING; ACOUST. CEILING AT 9'

102-HALL: VCT; RUBBER BASE; PAINTED GYP. BD. WALLS; SUSP. ACOUST. CEILING 9'

103- WOMEN'S RR: V.C.T.; RUBBER BASE; PAINTED M.R. GYP. BD; SUSP. ACOUST. CEILING 9'

104- MEN'S RR: V.C.T; RUBBER BASE; PAINTED M.R. GYP. BD; SUSP. ACOUST. CEILING; 9'

105 CHOIR ROOM: CARPET; RUBBER BASE; PAINTED GYP. BD. WALLS; 2 HR. RATED CEILING ASSEMBLY ABOVE SUSP. ACOUST. CEILING 10'

106 CLASSROOM: CARPET: RUBBER BASE; PAINTED GYP. BD. WALLS; 2 HR. RATED CEILING ASSEMBLY ABOVE SUSP. ACOUST. CEILING 10'

107 CLASSROOM: CARPET; RUBBER BASE; PAINTED GYP. BD. WALLS; SUSP. ACOUST. CEILING 9'

108 JANITOR CLOSET: SEALED CONCRETE; RUBBER BASE; PAINTED GYP. BD WALLS; PAINTED GYP. BD.CEILING AT BOTTOM OF ATTIC FLOOR JOISTS; CONFIRM LIGHTS FOR THIS ARE AREA RIGHT TYPE

109 WARMING KITCHEN: V.C.T.; RUBBER BASE; PAINTED M.R. GYP BD. WALLS; SUSP. ACOUST. CEILING 9'

110 PANTRY: V.C.T.; RUBBER BASE; PAINTED GYP. BD. WALLS; PAINTED GYP. BD. CEILNG AT BOTTOM OF ATTIC FLOOR JOISTS; CONFIRM LIGHTS FOR THIS AREA ARE RIGHT TYPE.

111 GYM/FELLOWSHIP HALL: SEALED CONCRETE; RUBBER BASE; SEALED 5/8" PLYWOOD WALLS AND CEILINGS; PAINT BASKETBALL COURT LINES BEFORE SEALING

112 OFFICE: CARPET; RUBBER BASE; PAINTED GYP. BD. WALLS; SUSP. ACOUST. CEILING 9'

113 CLASSROOM: CARPET; RUBBER BASE; PAINTED GYP. BD. WALLS; SUSP. ACOUST. CEILING 9'

114 CONF. ROOM: CARPET; RUBBER BASE; PAINTED GYP. BD. WALLS; SUSP. ACOUST. CEILING 9'

115 OFFICE: CARPET; RUBBER BASE; PAINTED GYP. BD. WALLS; SUSP. ACOUST. CEILING 9'

116 COMPUTER ROOM: CARPET; RUBBER BASE; PAINTED GYP. BD. WALLS; SUSP. ACOUST. CEILING 9'

117 RISER ROOM: CONCRETE; RUBBER BASE; PAINTED GYP. BD. WALLS; GYP. BD. CEILING

BUILDING NOTES:
. EXTERIOR WALLS TO HAVE R19 BATT OR BLOWN INSULATION (2X6 STUD WALLS). BRICK VENEER EXCEPT AT GABLES WHERE IT SHALL BE VINYL SIDING. INSTALL MOISTURE BARRIER ON THE OUTSIDE OF WALL SHEATHING. THERE SHALL BE 1" AIR SPACE BETWEEN WALL AND BRICK VENEER.INSTALL BRICK AS PER BRICK MASONRY INSTITUTE SPECIFICATIONS INCLUDING WEEP HOLES AND FLASHING WHERE REQUIRED. . CEILING/ATTIC INSULATION SHALL BE MINIMUM OF R-30 BLOWN OR BATT INSULATION. ROOF SHALL BE ARCHITECTURAL PROFILE FIBERGLASS ASPHALT SHINGLES INSTALLED OVER 2 LAYERS OF 15# FELT AND SHEATHING AS SHOWN ON STRUCTURAL DRAWINGS.

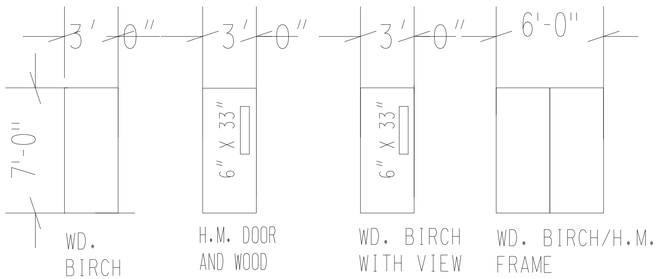

WD. BIRCH (SEE SCHEDULE FOR POCKET DOOR AND HINGED DOORS)

H.M. DOOR AND WOOD FRAME WITH VIEW LITE (INSUL, TEMPERED)

WD. BIRCH WITH VIEW LITE (TEMPERED)

WD. BIRCH/H.M. FRAME

DOOR TYPES

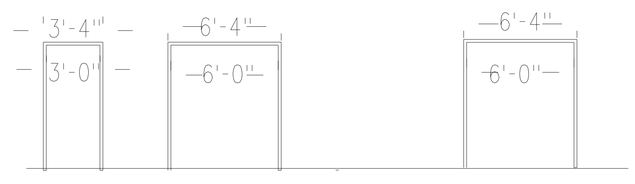

H.M. F-1

H.M. F-2

H.M. F-3

FRAME TYPES

10/23/17: . FINISHES SHALL MEET THE FOLLOWING REQUIREMENTS:
CORRIDORS: CLASS B; ALL
OTHER ROOMS: CLASS C

WINDOW SCHEDULE

A — FIBERGLASS 3' X 5" SINGLEHUNG WINDOW MUST HAVE 20"WX24"H AND 5.7 S.F. CLEAR OPENING

QTY: 4

THE DESIGN FIRM

STATE OF ALABAMA
ANITA JOHNSON DENSON
3519
10/23/17
REGISTERED ARCHITECT

GYMNSIUM/FELLOWSHIP HALL ADDITION FOR
UNION HILL CUMBERLAND PRESBYTERIAN CHURCH
IN AMERICA
3126 NEVEL DR., HUNTSVILLE, AL. 35810

ANITA J. DENSON - ARCHITECT . 102 ASHWOOD DRIVE . DECATUR, AL. 35603
thedesignfirm@bellsouth.net . PHONE: 256-351-0435 . MOBILE: 256-318-4690

SHEET TITLE:
SCHEDULES & NOTES

DATE	DRAWN BY
9/5/17	

REVISIONS
10/23/17

SHEET	OF
A9	9

10/23/17 REVISED BECAUSE BLDG. IS SPRINKLERED NOW.
ALLOWABLE BUILDING AREA AFTER USING AREA MODIFICATION FORMULA IS 28,380 S.F.
THIS ADDITION NORTH OF THE 2 HR. FIRE WALL IN THE VESTIBULE IS11,263 S.F..
THE CHOIR ROOM IS HAS AN EXTERIOR DOOR DUE TO IT BEING
50 OCCUPANT LOAD.

10/23/17 REVISED:
TOTAL OCCUPANCY OF ADDITION IS: 531.
A3 GYM/FELLOWSHIP HALL IS 418: E=95, B=14, K=3: S=1.
THE VESTIBULE 101 IS 152 S.F AND IS
SEPARATED BY 2 HR. WALL AND 90 DOOR/FRAME ASSEMBLY
AND 1 HR. EXT. WALLS 4' EA. SIDE OF 2 HR. WALL AND 1 HR.
ROOF ASSEMBLY 4' EA. SIDE OF 2 HR. WALL.

1 10/23/17: THE ADDITION SHALL BE SPRINKLERED NORTH OF 2 HR. WALL AT DOOR 102. THERE WILL BE NO FIRE RATED ASSEMBLIES IN THE ADDITION EXCEPT AS SHOWN AT THE 2 HR. WALL (WHICH INCLUDES 90 MIN. DOOR FRAME ASSEMBLY AND 1 HR. EXT. WALLS 4' EA. SIDE OF 2 HR. WALL AND 1 HR. RATED ROOF ASSEMBLY. THE EXTERIOR DOOR 106B AT CLASSROOM 106 HAS BEEN REMOVED DUE TO SPRINKLER SYSTEM AND THE DOORS AT CHOIR ROOM (DOOR 105A) AND THE CLASSROOM (DOOR 106A) ARE NOT RATED NOW.

10/23/17 REVISED:
TYPE I HOOD WITH AUTOMATIC
FIRE-EXTINGUISHING SYSTEM
ABOVE RANGE/OVEN UNIT

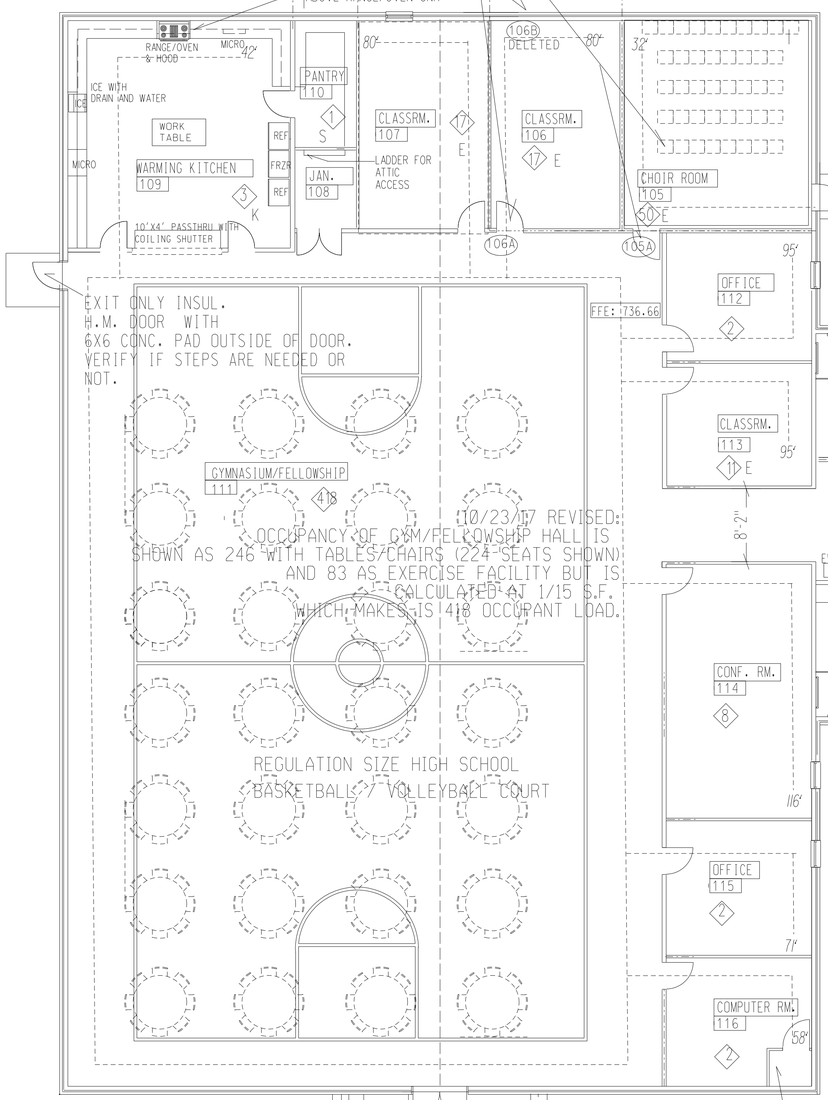

10/23/17 REVISED:
2 HR. FIREWALL
WITH 90 MIN.
DOOR/FRAME
ASSEMBLY
WITH 1 HR.
EXT. WALLS
AND 1 HR.
ROOF ASSEMBLY
4' EA. SIDE OF
2 HR. WALL.

1 HR. WALLS
AND CEILINGS
IN VESTIBULE

THE VESTIBULE NORTH OF EXISTING SANCTUARY (101) SHALL HAVE 1 HR. RATED WALL AT CONNECTION BETWEEN NEW AND EXISTING AND SHALL HAVE 20 MIN. DOOR/FRAME ASSEMBLY.

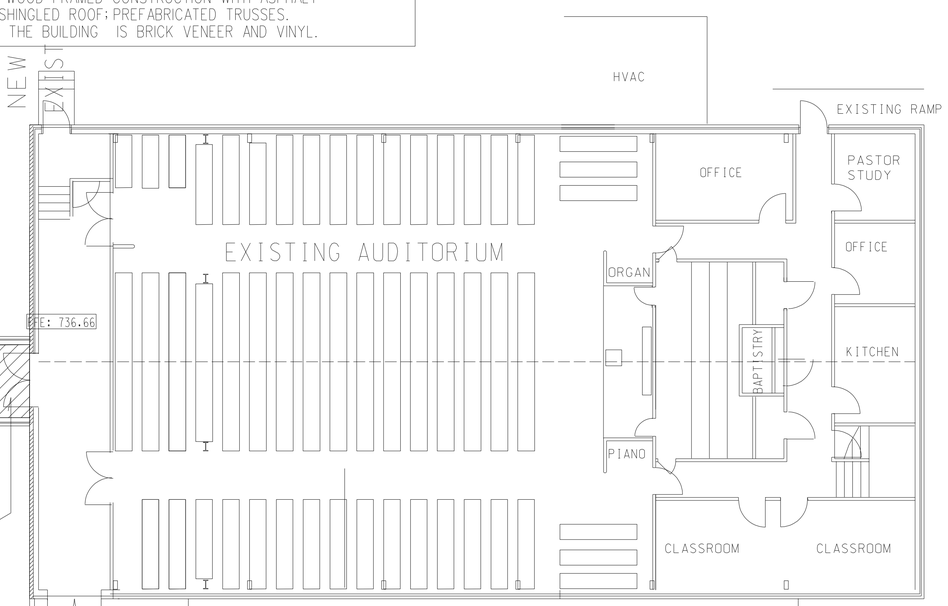

MEANS OF EGRESS:

ITEM	CODE REQUIREMENT	PROVIDED
NUMBER OF EXITS	2	6
TRAVEL DISTANCE	250' FEET	66 FEET
DEAD END CORRIDOR	20 FEET	0 FEET
CORRIDOR WIDTH	44 INCH MINIMUM	96 INCHES
WIDTH OF EGRESS DOORS	32 INCH MINIMUM/ .2" PER PERSON	252" TOTAL; 36"/DOOR

BUILDING DESCRIPTION:

10/23/17 REVISED TO SPRINKLERED:
. THIS BUILDING IS A-3, B, E S NON-SEPARATED MIXED OCCUPANCY, TYPE VB CONSTRUCTION, SPRINKLERED, UNPROTECTED.

. BUILDING IS WOOD FRAMED CONSTRUCTION WITH ASPHALT FIBERGLASS SHINGLED ROOF; PREFABRICATED TRUSSES. EXTERIOR OF THE BUILDING IS BRICK VENEER AND VINYL.

FIRE PROTECTION REQUIREMENTS:

BUILDING ELEMENT	FIRE RATING/ ACCESS OPENING
EXTERIOR BEARING WALLS	0
EXTERIOR NON-BEARING WALLS	0
INTERIOR BEARING WALLS	0
COLUMNS	0
BEAMS, GIRDERS, ETC.	0
FLOORS AND FLOOR/CEILING	0
ROOF AND ROOF/CEILING	0
FIREWALL	0
CORRIDOR ENCLOSURE (10/23/17 REV.- SPRINKLERED)	0
OCCUPANCY SEPARATION	0

LEGEND FOR LIFE SAFETY PLAN:

- 1 HR. RATED WALLS W/ 45 MIN. OPENING PROTECTIVES. THE SHADED AREAS TO BE 1 HR. RATED CEILING ASSEMBLY.
- THE SHADED AREAS TO BE 1 HR. RATED CEILING ASSEMBLY.
- * OF OCCUPANTS PER ROOM OR AREA
- 2 HR. RATED WALL WITH 90 MIN. DOOR/FRAME ASSEMBLY; 1 HR. WALL AND CEILING (UNDER ROOF DECK) 4' EITHER SIDE OF 2 HR. WALL.
- COMMON PATH OF TRAVEL

EXISTING: 5257 S.F.
ADDITION: 11415 S.F. TOTAL
VEST. 101 152 S.F.
SEPARATED S.F.: 11415/152

10/23/17 REVISED:
AREA MODIFICATION CALCULATION:
TYPE VB, SPRINKLERED, UNPROTECTED
A3 1 STORY, 6000 S.F.; B 2 STORY 9000 S.F.;
E 1 STORY 9500 S.F.; S1 1 STORY 9000 S.F..
USE LOWEST (6000 S.F.) FOR FORMULA.
Aa= {6000+[6000x.73] + [6000x3]= 28,380 MAX. ALLOWED S.F.;
If=.73

CODE RESEARCH NOTES:
NOTE: 10/23/17: CHANGED TO SPRINKLERED BUILDING.
. HUNTSVILLE, AL IS UNDER 2003 INTERNATIONAL BUILDING CODE. HOWEVER, THE STATE OF ALABAMA IS UNDER 2009 INTERATIONAL BUILDING CODE. THE MORE STRINGENT ONE WILL APPLY.

. THIS IS A NON-SEPARATED MIXED OCCUPANCY A3 RELIGIOUS ASSEMBLY AND EDUCATIONAL (RELIGIOUS); TYPE VB, UNPROTECTED, SPRINKLERED.
. OCCUPANCY LOADS: ASSEMBLY (A3) WITHOUT FIXED SEATS =15 S.F./PERSON = 418 (10/23/17 REVD); EDUCATIONAL = 20 S.F./PERSON= 95 ; BUSINESS @ 100 S.F./PERSON= 14; KITCHEN: 3; STORAGE 1. TOTAL OCCUPANCY LOAD FOR BUILDING IS 531.
. THIS PROJECT CONSISTS OF A 1 STORY WOOD FRAMED BRICK-VENEER ADDITION THAT WILL BE NON-SEPARATED MIXED OCCUPANCY BUILDING. THE ROOF SHALL BE ASPHALT FIBERGLASS SHINGLES ON PREFABRICATED WOOD TRUSSES.
. THE OCCUPANCIES IN ADDITION ARE SEPARATED FROM EXISTING BY 2 HR. FIRE WALL THAT IS HORIZONTAL EXIT. THE 2 HR. WALL AT DOOR 102 SHALL MEET EXTERIOR WALLS WITH 1 HR. RATING 4' EITHER SIDE OF 2 HR. WALL (HORIZONTAL CONTINUITY); ROOF SHALL BE PROTECTED WITH 1 HR. RATED ASSEMBLY 4' EITHER SIDE OF 2 HR. WALL. THERE WILL BE NO ROOF OPENINGS WITHIN 4' OF FIRE WALL WITH CLASS B ROOF COVERING OR BETTER RATING. THE DOOR/FRAME ASSEMBLY FOR SHALL BE 90 MIN. RATED. 2HR WALL TO BE UL U301 DESIGN OR APPROVED EQUAL. THIS IS 2 LAYERS OF TYPE X GYP. BD. ON EACH SIDE OF WOOD STUD WALL UP TO BOTTOM OF ROOF DECK. INSTALL AS PER UL DESIGN. 1 HR. EXTERIOR WALL = U356; 1 HR. CEILING 4' EITHER SIDE OF 2 HR. WALL= UL P522 OR APPROVED EQUAL.
10/23/17: . FINISHES SHALL MEET THE FOLLOWING REQUIREMENTS:
CORRIDORS: CLASS B; ALL OTHER ROOMS: CLASS C

PROVIDE 10B FIRE EXTINGUISHERS
NO FARTHER THAN 100' APART.
CONFIRM QUANTITY AND
LOCATION WITH LOCAL FIRE OFFICIAL.
PROVIDE A MINIMUM OF 3 FOR ADDITION.

LIFE SAFETY PLAN

SCALE: 1/8" =1'-0"

NORTH

THE DESIGN FIRM

STATE OF ALABAMA
ANITA JOHNSON DENSON
3519
10/23/17
REGISTERED ARCHITECT

GYMNSIUM/FELLOWSHIP HALL ADDITION FOR
UNION HILL CUMBERLAND PRESBYTERIAN CHURCH
IN AMERICA
3126 NEVEL DR., HUNTSVILLE, AL. 35810

ANITA J. DENSON - ARCHITECT . 102 ASHWOOD DRIVE . DECATUR, AL. 35603
thedesignfirm@bellsouth.net . PHONE: 256-351-0435 . MOBILE: 256-318-4690

SHEET TITLE:
LIFE SAFETY PLAN

DATE	DRAWN BY
9/5/17	

REVISIONS
10/23/17

SHEET	OF
LS1	1

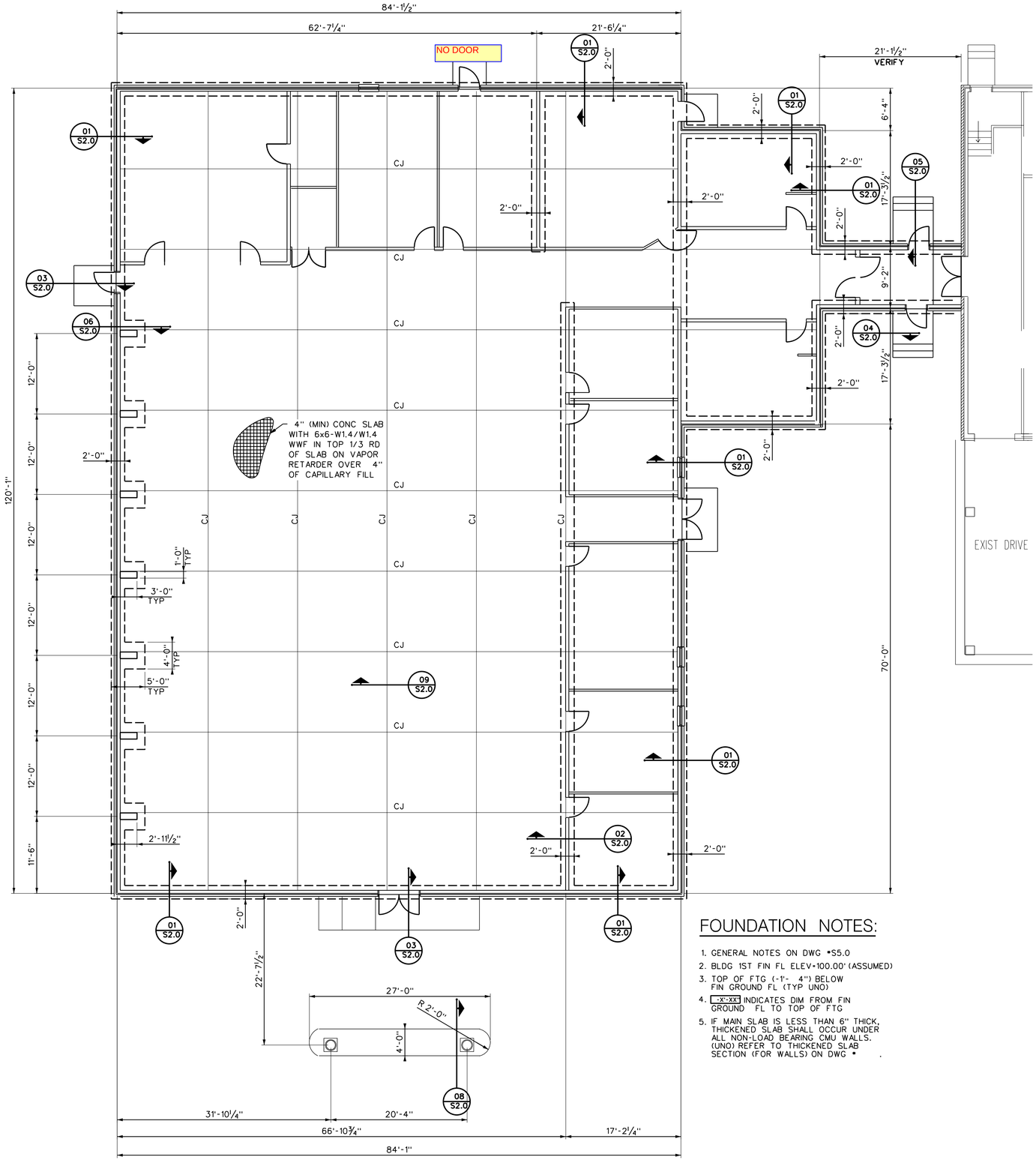

FOUNDATION PLAN

SCALE: 1/8 " = 1'-0"

FOUNDATION NOTES:

1. GENERAL NOTES ON DWG #S5.0
2. BLDG 1ST FIN FL ELEV=100.00' (ASSUMED)
3. TOP OF FTG (-1'- 4") BELOW FIN GROUND FL (TYP UNO)
4. -X'-XX" INDICATES DIM FROM FIN GROUND FL TO TOP OF FTG
5. IF MAIN SLAB IS LESS THAN 6" THICK, THICKENED SLAB SHALL OCCUR UNDER ALL NON-LOAD BEARING CMU WALLS. (UNO) REFER TO THICKENED SLAB SECTION (FOR WALLS) ON DWG # .

Qualls Engineering
3311 Bob Wallace Ave Suite 201
Huntsville, Alabama 35805
Telephone (256) 551-0407

ALABAMA REGISTERED NO. 16160 PROFESSIONAL ENGINEER JAMES GREGORY QUALLS

9-5-17

A BUILDING ADDITION FOR
UNION HILL CUMBERLAND PRESBYTERIAN CHURCH
HUNTSVILLE, ALABAMA

REVISIONS

JOB NO. 1723
DRAWN JGQ
CHECKED JGQ
REVIEWED
DATE SEPT. 5, 2017

S1.0
OF
5

OF

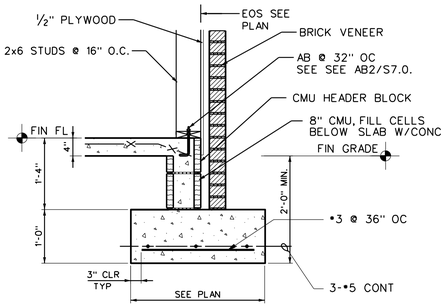

01 S2.0 SECTION
SCALE: ¾ " = 1'-0"

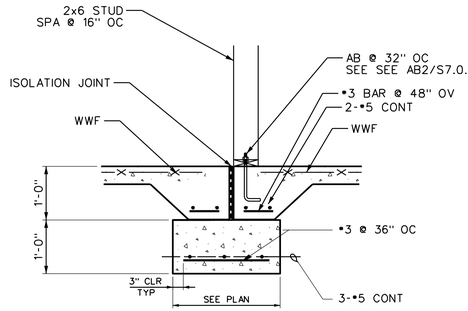

02 S2.0 SECTION
SCALE: ¾ " = 1'-0"

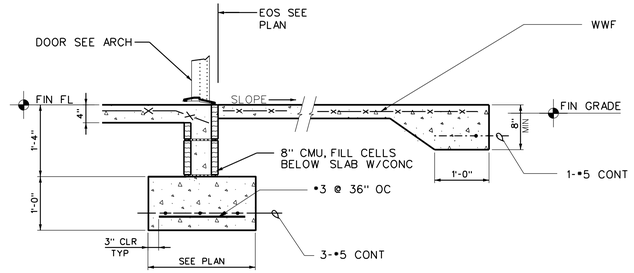

03 S2.0 SECTION
SCALE: ¾ " = 1'-0" (TYP. @ DOORS)

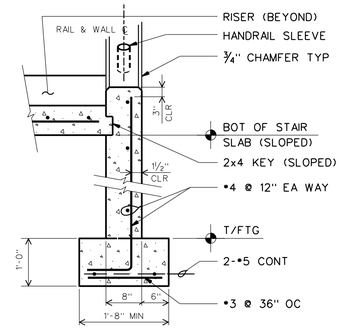

04 S2.0 STAIR CHEEK WALL SECTION
¾" = 1'-0"

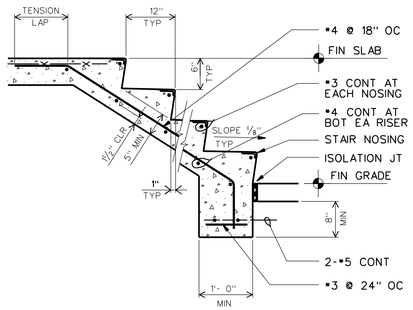

05 S2.0 CONC STAIR SECTION
¾" = 1'-0"

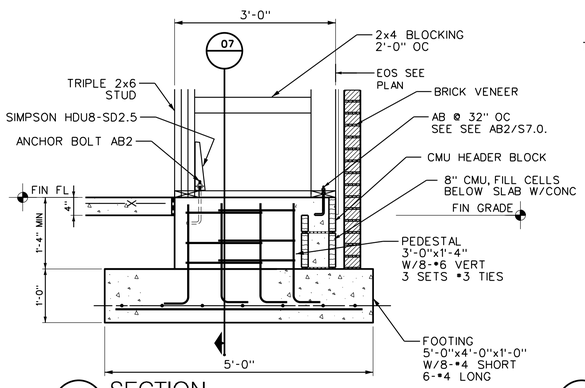

06 S2.0 SECTION
SCALE: ¾ " = 1'-0"

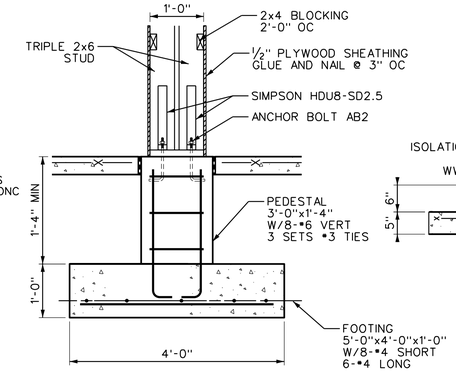

07 S2.0 SECTION
SCALE: ¾ " = 1'-0"

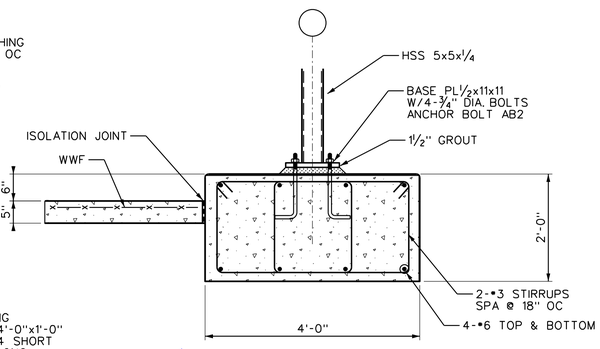

~~09~~ S2.0 SECTION
SCALE: ¾ " = 1'-0"
8 ON S-2

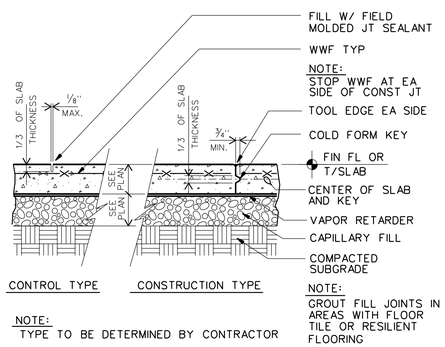

NOTE:
TYPE TO BE DETERMINED BY CONTRACTOR

09 S2.0 TYP. CONTROL / CONST JT DET
NOT TO SCALE **(NOTED ON PLAN BY - C.J.)**

Qualls Engineering
3311 Bob Wallace Ave Suite 201
Huntsville, Alabama 35805
Telephone (256) 551-0407

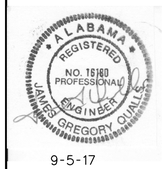

9-5-17

A BUILDING ADDITION FOR
UNION HILL CUMBERLAND PRESBYTERIAN CHURCH
HUNTSVILLE, ALABAMA

REVISIONS

JOB NO. 1723
DRAWN JGQ
CHECKED JGQ
REVIEWED
DATE SEPT. 5, 2017

S2.0
OF
5

OF

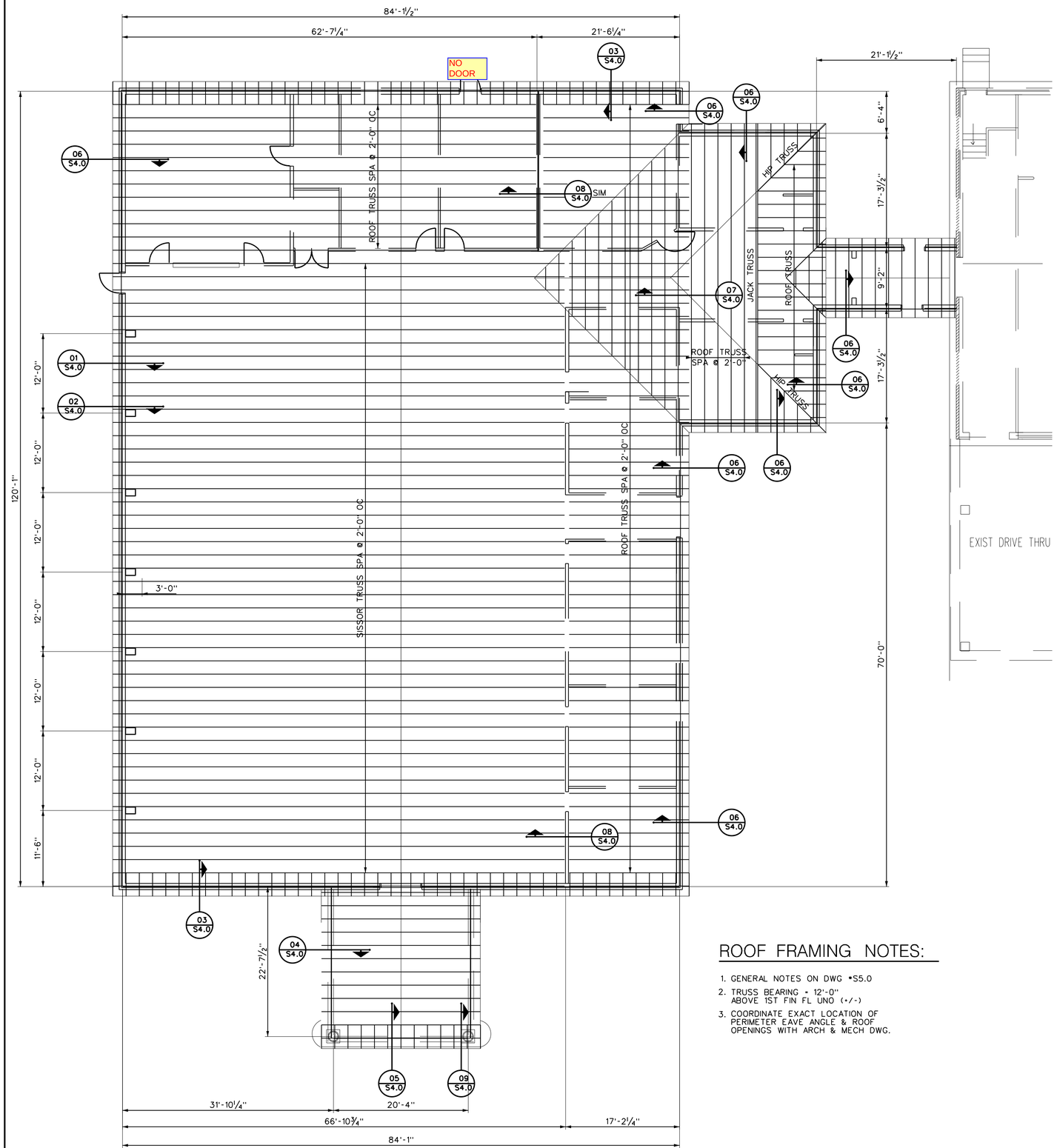

ROOF FRAMING PLAN

SCALE: 1/8 " = 1'-0"

ROOF FRAMING NOTES:

1. GENERAL NOTES ON DWG #S5.0
2. TRUSS BEARING = 12'-0" ABOVE 1ST FIN FL UNO (+/-)
3. COORDINATE EXACT LOCATION OF PERIMETER EAVE ANGLE & ROOF OPENINGS WITH ARCH & MECH DWG.

Qualls Engineering
3311 Bob Wallace Ave Suite 201
Huntsville, Alabama 35805
Telephone (256) 551-0407

ALABAMA REGISTERED NO. 16160 PROFESSIONAL ENGINEER JAMES GREGORY QUALLS

9-5-17

A BUILDING ADDITION FOR
UNION HILL CUMBERLAND PRESBYTERIAN CHURCH
HUNTSVILLE, ALABAMA

REVISIONS

JOB NO. 1723
DRAWN JGQ
CHECKED JGQ
REVIEWED
DATE SEPT. 5, 2017

S3.0
OF
5

OF

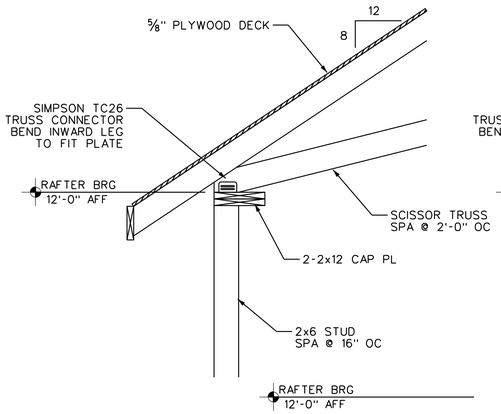

01 S4.0 SECTION
SCALE: 3/4 " = 1'-0"

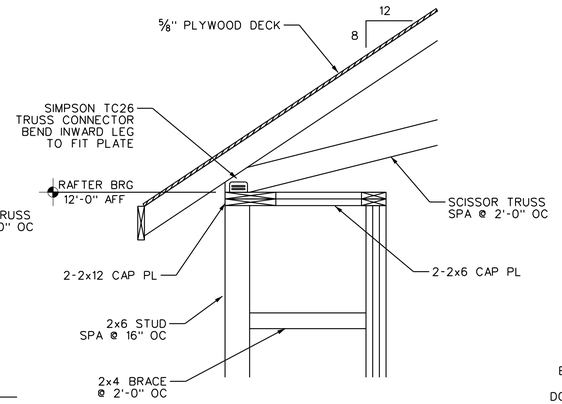

02 S4.0 SECTION
SCALE: 3/4 " = 1'-0"

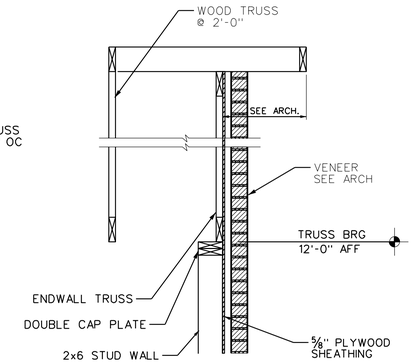

03 S4.0 SECTION
SCALE: 3/4 " = 1'-0"

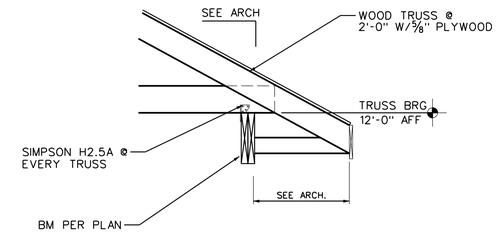

04 S4.0 SECTION
SCALE: 3/4 " = 1'-0"

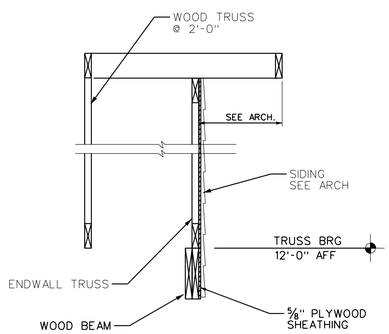

05 S4.0 SECTION
SCALE: 3/4 " = 1'-0"

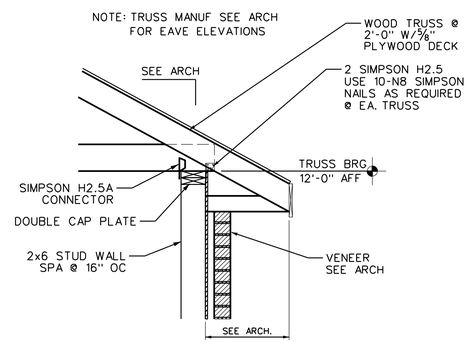

06 S4.0 SECTION
SCALE: 3/4 " = 1'-0"

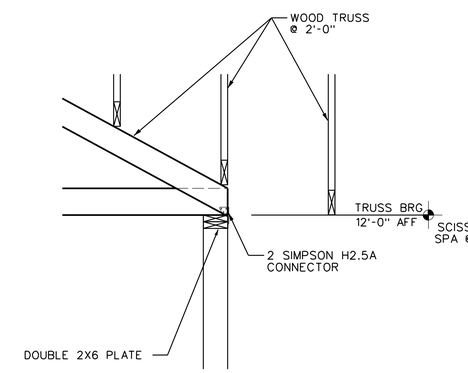

07 S4.0 SECTION
SCALE: 3/4 " = 1'-0"

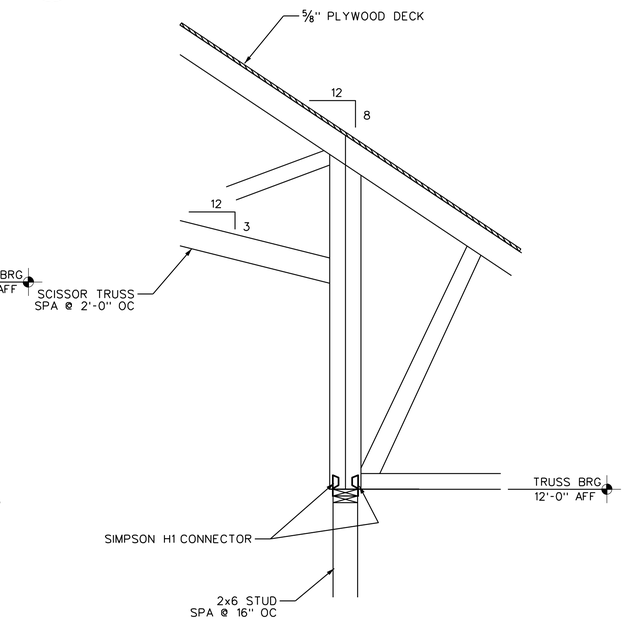

08 S4.0 SECTION
SCALE: 3/4 " = 1'-0"

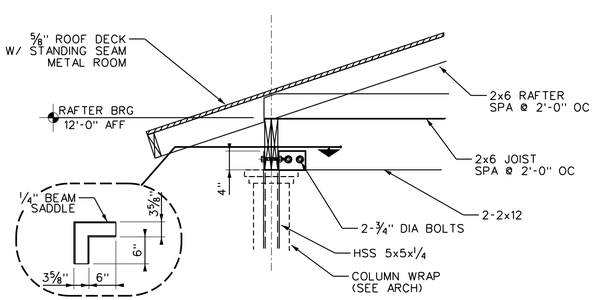

09 S4.0 SECTION
SCALE: 3/4 " = 1'-0"

Qualls Engineering
3311 Bob Wallace Ave Suite 201
Huntsville, Alabama 35805
Telephone (256) 551-0407

ALABAMA REGISTERED NO. 16180 PROFESSIONAL ENGINEER JAMES GREGORY QUALLS

9-5-17

A BUILDING ADDITION FOR
UNION HILL CUMBERLAND
PRESBYTERIAN CHURCH
HUNTSVILLE, ALABAMA

REVISIONS

JOB NO. 1723
DRAWN JGQ
CHECKED JGQ
REVIEWED
DATE SEPT. 5, 2017

S4.0
OF
5

OF

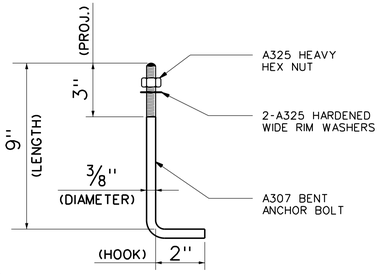

AB1 TYP ANCHOR BOLT DETAIL (AB1)
NO SCALE

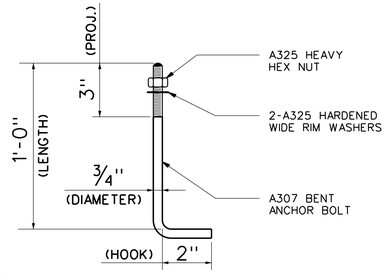

AB2 TYP ANCHOR BOLT DETAIL (AB2)
NO SCALE

LINTEL SCHEDULE

MASONRY OPENING WIDTH		STEEL LINTEL
MIN	MAX	ANGLE FOR EA 4" WALL THICKNESS
----	2'-0"	L 3½x3x¼
2'-0"	3'-6"	L 3½x3x¼
3'-6"	5'-0"	L 3½x3x5/16
5'-0"	6'-6"	L 4x3½x¼
6'-6"	8'-0"	L 5x3½x¼
8'-0"	10'-0"	L 6x3½x5/16
10'-0"	12'-0"	L 6x4x⅜

SCHEDULE NOTES:

NOTE *1: HAVE A MINIMUM 8" BEARING EACH END.

NOTE *2: STEEL LINTELS ARE TO BE GALVANIZED.

HEADER SCHEDULE

MK*	OPENING WIDTH		WOOD SIZE
	MIN	MAX	
	2'-0"	6'-0"	3-2x8
	6'-0"	10'-0"	3-2x12

SCHEDULE NOTES:

NOTE *1: HAVE A MINIMUM 8" BEARING EACH END.

NOTE *2: HEADER MAY REQUIRE PLYWOOD SPACER TO MATCH WALL THICKNESS.

REQUIRED INSPECTIONS

INSPECTION	FREQUENCY	COMMENTS
REBAR PLACEMENT	BEFORE PLACING CONCRETE	
CONCRETE	50 YDS	4 CYLINDERS/SET MIN 1 SET PER POUR
CONCRETE DESIGN MIX	1 PER MIX	
BOLTS	10% OF BOLTS ⅝" OR LARGER	TURN NUT OF METHOD
EPOXY ADHESIVE	EA. BOLT	PULL OUT TEST IN ACCORDANCE WITH ASTM

GENERAL NOTES

1. GENERAL

1.1 DESIGN CRITERIA:
A. CODES:
A.1 INTERNATIONAL BUILDING CODE
A.2 BUILDING CODE REQUIREMENTS FOR REINFORCED CONCRETE (ACI 318).
A.3 SPECIFICATION FOR THE DESIGN, FABRICATION AND ERECTION OF STRUCTURAL STEEL FOR BUILDINGS, (AISC LATEST EDITION).
B. DESIGN LIVE LOADS (PSF):
ROOF.....20
C. LATERAL FORCES:
WIND: WIND VELOCITY = 120 MPH
IMPORTANCE FACTOR Is = 1.0
EXPOSURE CATEGORY = B
SEISMIC: IBC 2012
SDs = 25.7
SD1 = 10.7
IMPORTANCE FACTOR Is = 1.0
SITE CLASS = D

1.2 SUBMIT 5 COPIES OF SHOP DRAWINGS FOR REVIEW.
1.3 ALL DETAILS SHOWN ARE TYPICAL. SIMILAR DETAILS APPLY TO SIMILAR CONDITIONS, UNLESS NOTED.
1.4 THE MORE CONSERVATIVE APPROACH TO BUILDING SHALL BE USED IN THE EVENT OF DISCREPANCIES BETWEEN THE ARCHITECTURAL DRAWINGS, THESE DRAWINGS AND THE SPECIFICATIONS.

2. FOUNDATION

2.1 MAXIMUM BEARING PRESSURES (PSF)
SPREAD FOOTINGS.....3,000
CONTINUOUS FOOTINGS.....2,500
2.2 SOIL CONDITIONS ARE IN A REPORT ISSUED BY GEO SOLUTIONS, INC
THE REPORT IS CONSIDERED A PART OF THE SPECIFICATION TITLED:
UNION HILL PRESBYTERIAN CHURCH
ADDITION
2136 NEVEL DRIVE
HUNTSVILLE, ALABAMA
PROJECT NO. 17-0227
APRIL 18, 2017

2.3 REMOVE ALL ORGANIC AND UNSUITABLE MATERIAL PRIOR TO PLACING FILL. PLACE FILL IN HORIZONTAL LAYERS NOT TO EXCEED 8 INCHES IN LOOSE THICKNESS AND COMPACT TO A MINIMUM OF 98% STANDARD PROCTOR DENSITY AT OPTIMUM MOISTURE CONTENT. IF ACCEPTABLE TO THE OWNER'S GEOTECHNICAL ENGINEER, ON-SITE MATERIALS THAT MEET PROJECT SPECIFICATION REQUIREMENTS MAY BE USED FOR ENGINEERED FILL IF MAINTAINED AT OPTIMUM MOISTURE CONTENT AND COMPACTED TO THE ABOVE CRITERIA. SELECT BORROW MATERIALS WILL BE REQUIRED WHEN ON-SITE MATERIALS ARE UNSUITABLE OR CANNOT BE COMPACTED TO THE CRITERIA STATED ABOVE.
2.4 PROVIDE POSITIVE PROTECTION FOR ALL EXCAVATION SLOPES AGAINST INSTABILITY AND DETERIORATION DUE TO RAIN OR WIND.
2.5 ALLOW THE OWNER'S GEOTECHNICAL ENGINEER TO INSPECT ALL FINISHED EXCAVATIONS AND BEARING SUBGRADES BEFORE PLACING CONCRETE.
2.6 USE SIDE FORMS FOR ALL FOOTINGS AND GRADE BEAMS. CLEAN REINFORCEMENT IMMEDIATELY PRIOR TO PLACING CONCRETE. PLACE THE CONCRETE FOR EACH FOOTING IN ONE CONTINUOUS POUR.

3. CONCRETE

3.1 CONCRETE (MINIMUM) COMPRESSIVE STRENGTH AT 28 DAYS:
3000 PSI.....SLABS ON GRADE AND FOUNDATIONS.
3.2 MIX DESIGN SUBMITTALS SHALL INCLUDE (BUT ARE NOT LIMITED TO) IDENTIFICATION OF WHAT APPLICATION THE PROPOSED DESIGN MIX IS TO BE USED FOR, DESIGN STRENGTH IN PSI, RANGE OF SLUMP IN INCHES, AND LABORATORY TEST REPORTS OR EVALUATION REPORTS FOR CONCRETE MATERIALS AND CONCRETE MIX DESIGNS.
3.3 REINFORCING BARS: ASTM A615 GRADE 60.
3.4 WELDED WIRE FABRIC (WWF): ASTM A185
3.5 REINFORCING BAR PLACING ACCESSORIES IN ACCORDANCE WITH ACI MANUAL OF STANDARD PRACTICE. WHERE CONCRETE IS EXPOSED IN FINISHED BUILDING, PROVIDE ACCESSORIES WITH RUSTPROOF LEGS.
3.6 DETAIL REINFORCING IN ACCORDANCE WITH ACI 315. REINFORCING SHALL NOT BE WELDED UNLESS NOTED OR APPROVED BY THE ENGINEER.
3.7 LAP SPLICE ALL REINFORCING EXCEPT NO. 14 AND NO. 18 BARS A MINIMUM OF 30 BAR DIAMETERS BUT NOT LESS THAN 1'-6", UNLESS NOTED.
3.8 CONCRETE COVERAGE OF REINFORCEMENT:
FOOTINGS.....3" BOTTOM & SIDES
CONCRETE EXPOSED TO EARTH OR WEATHER...2"
OTHER CONCRETE.....1 1/2 "
3.9 EARTH SUPPORTED SLABS: SEE DRAWINGS
3.10 CONCRETING OPERATIONS SHALL COMPLY WITH ACI STANDARDS.

4 STRUCTURAL STEEL

4.1 STRUCTURAL STEEL:
CHANNELS, ANGLES & PLATES.....ASTM A36.
PIPE COLUMNS.....ASTM A501 (Fy=33 KSI)
SQUARE/RECTANGULAR TUBE COLUMNS.....ASTM A500 (Fy=46 KSI)
SQUARE/RECTANGULAR TUBE BEAMS.....ASTM A500 (Fy=46 KSI)
4.2 WELDED CONNECTIONS: E70XX ELECTRODES, MINIMUM SIZE FILLET WELD 3/16 ".
4.3 BOLTED CONNECTIONS (UNLESS OTHERWISE NOTED):
BEARING TYPE A325-N, IN ACCORDANCE WITH AISC "SPECIFICATION FOR STRUCTURAL JOINTS USING ASTM A325 OR A490 BOLTS". BOLTS THROUGH 4" WIDE BEAM FLANGES SHALL BE 5/8 " DIAMETER. OTHER BOLTS SHALL BE 3/4 " DIAMETER.
4.4 FABRICATE AND ERECT ALL STRUCTURAL STEEL IN ACCORDANCE WITH AISC "SPECIFICATION FOR STRUCTURAL STEEL BUILDINGS".
4.5 SEE ARCHITECTURAL DRAWINGS FOR ANGLES, CLIPS, BARS, PLATES AND OTHER ITEMS ATTACHED TO STRUCTURAL MEMBERS.
4.6 DO NO CUTTING, DRILLING OR MODIFYING OF STRUCTURAL MEMBERS WITHOUT THE APPROVAL OF THE ARCHITECT.
4.7 WELDING SHALL CONFORM TO AWS D1.1 AND ONLY E70XX LOW HYDROGEN ELECTRODES SHALL BE USED.
4.8 STEEL FABRICATOR SHALL BE RESPONSIBLE FOR DESIGNING BOLTED CONNECTIONS. CONNECTIONS SHALL BE DESIGNED FOR MAXIMUM UNIFORM LOAD FOR THE GIVEN SPAN AS INDICATED IN THE AISC "MANUAL OF STEEL CONSTRUCTION".
4.9 CONTRACTOR SHALL NOTE THAT THE FRAMING IS NON-SELF SUPPORTING AND SHALL PROVIDE ADEQUATE TEMPORARY BRACING AS NEEDED.
4.10 EPOXY ANCHORS SHALL BE HILTI, RAMSET EPCON, OR SIMPSON USING THE APPROPRIATE SYSTEM AS RECOMMENDED BY THE MANUFACTURER FOR ANCHORING INTO CONCRETE, SOLID OR HOLLOW MASONRY.

5 WOOD TRUSSES

5.1 WOOD TRUSSES SHALL BE DESIGNED IN ACCORDANCE WITH THE REQUIREMENTS OF THE TRUSS PLATE INSTITUTE (TPI) AS FOLLOWS (BUT NOT LIMITED TO);
TPI-85 - "DESIGN SPECIFICATION FOR METAL PLATE CONNECTED WOOD TRUSSES"
PCT-80 - "DESIGN SPECIFICATION FOR METAL PLATE CONNECTED PARALLEL CHORD WOOD TRUSSES"
HIB-91 - "COMMENTARY AND RECOMMENDATIONS FOR HANDLING, INSTALLING & BRACING METAL PLATE CONNECTED WOOD TRUSSES"
5.2 ALL TRUSSES SHALL BE DESIGNED AND SEALED BY A QUALIFIED ENGINEER REGISTERED IN THE STATE OF ALABAMA. ALL DESIGN CALCULATIONS AND SHOP DRAWINGS SHALL BE SUBMITTED TO THE ARCHITECT FOR REVIEW BEFORE MANUFACTURE.
5.3 STRESS GRADE SAWN LUMBER SHALL CONFORM TO NATIONAL SPECIFICATIONS FOR KILN DRIED NO.2 SOUTHERN PINE WITH ALLOWABLE STRESS VALUES OF 1300 PSI IN BENDING AND A MODULUS OF ELASTICITY OF 1600 PSI.
5.4 ROOF TRUSSES SHALL BE DESIGNED FOR THE FOLLOWING LOADS:
TOP CHORD DEAD LOAD.....10 PSF
TOP CHORD LIVE LOAD.....20 PSF
BOTTOM CHORD DEAD LOAD.....10 PSF
5.5 CONTRACTOR SHALL NOTE THAT THE FRAMING IS NON-SELF SUPPORTING AND SHALL PROVIDE ADEQUATE TEMPORARY BRACING AS NEEDED. (REFER TO HIB-91, SEE NOTE 6.1 ABOVE)

6 WOOD FRAMING NOTES

6.1 VISUAL GRADE SAWN LUMBER SHALL CONFORM TO NATIONAL SPECIFICATIONS FOR KILN DRIED NO. 2 SOUTHERN PINE WITH ALLOWABLE STRESS VALUES OF 1300 PSI IN BENDING AND A MODULUS OF ELASTICITY OF 1600 KSI.
6.2 PROVIDE BRIDGING IN FLOOR AND ROOF IN ACCORDANCE WITH APPLICABLE CODES AND AS SHOWN ON THE DRAWINGS.
6.3 DESIGN AND DETAILING OF CONNECTIONS SHALL CONFORM TO THE NATIONAL DESIGN AND SPECIFICATIONS FOR STRESS GRADE LUMBER AND ITS FASTENINGS AS RECOMMENDED BY THE NATIONAL FOREST PRODUCTS ASSOCIATION.
6.4 MAKE ALL CUTS TRUE AND SQUARE FOR FULL BEARING AT STRUCTURAL JOINTS.
6.5 BOLT HOLES AND PLATES TO BE PLACED AS SHOWN ON THE DETAILS. PROVIDE SPECIFIED SPACING, EDGE AND END DISTANCES.
6.6 CONNECT ALL FRAMING SECURELY TOGETHER WITH NAILS, SPIKES OR FRAMING ANGLES.
6.7 ALL METAL CONNECTOR AND ANCHOR DESIGNATIONS SHOWN ON THE DRAWINGS ARE FOR SIMPSON STRONG-TIE CONNECTORS. NAIL AS PER MANUFACTURER'S SCHEDULE.

Qualls Engineering
3311 Bob Wallace Ave Suite 201
Huntsville, Alabama 35805
Telephone (256) 551-0407

ALABAMA REGISTERED NO. 16180 PROFESSIONAL ENGINEER JAMES GREGORY QUALLS
9-5-17

A BUILDING ADDITION FOR
UNION HILL CUMBERLAND PRESBYTERIAN CHURCH
HUNTSVILLE, ALABAMA

REVISIONS

JOB NO. 1723
DRAWN JGQ
CHECKED JGQ
REVIEWED
DATE SEPT. 5, 2017

S5.0
OF
5

OF

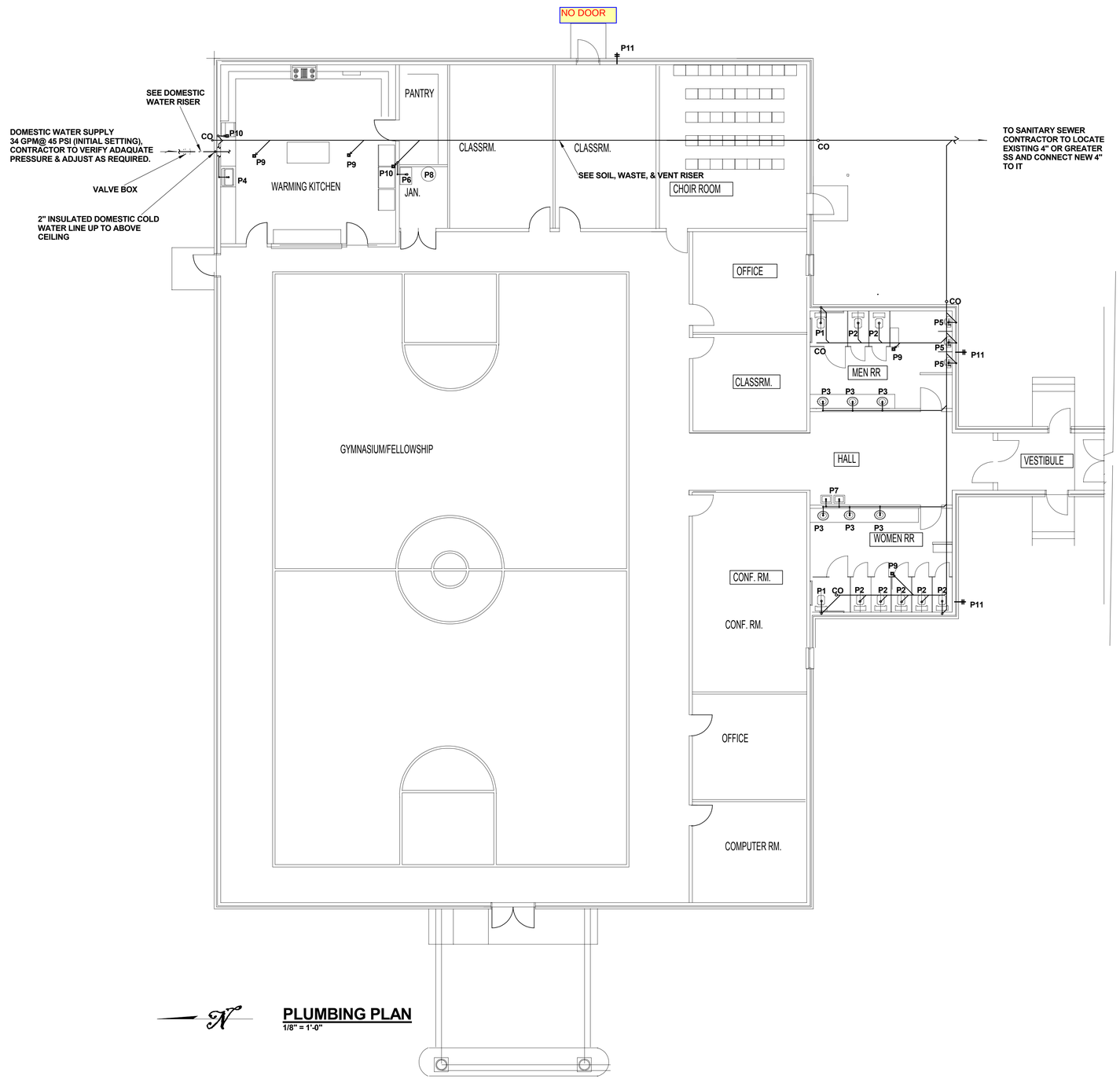

PLUMBING PLAN
1/8" = 1'-0"

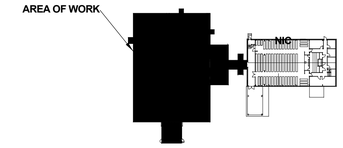

KEY PLAN

PLUMBING SCHEDULE

MARK	DESCRIPTION	MANUF.	MODEL	REMARKS
P1	WATER CLOSET	TOTO USA	DRAKE II	VITREOUS CHINA, WHITE/COTTON, WATER SENSE
	HANDICAP	(OR APPROVED EQUAL)	CST454CEFG#01	LISTED 3" FLUSH VALVE, SIPHON JET, ELONGATED
	TANK TYPE			BOWL W/ SANAGLOSS GLAZE, BOLT CAPS
	SEAT	TOTO USA	SC534	SOLID WHITE ELONGATED PLASTIC
				OPEN FRONT SEAT, MOUNTING HWDE INCLUDED
				HAND WHEEL STOP
P2	WATER CLOSET	TOTO USA	DRAKE	VITREOUS CHINA, COTTON, PRESSURE
	TANK TYPE	(OR APPROVED EQUAL)	CST744S#01	ASSISTED, SIPHON JET, ELONGATED BOWL
				14 HIGH, W/BOLT CAPS
				SOLID WHITE PLASTIC
	SEAT	TOTO USA	SC534	HINGED, OPEN FRONT SEAT
				HAND WHEEL STOP
P3	LAVATORY	TOTO USA	LT501.4#01	OVAL VITRIOUS CHINA, LAVATORY, COTTON
	HANDICAP	(OR APPROVED EQUAL)		ADJUSTABLE P-TRAP, INSULATED HOT
	COUNTER TOP		3302.015	HAND WHEEL STOPS, DRAIN, STRAINER
	GRID DRAIN		2411.015	DRAIN ASSEMBLY, 1-1/4" P-TRAP
	FAUCET	DELTA	3579 HDF	
P4	GENERAL SINK	ELKAY	CR-1721	302, 18GA STAINLESS STEEL
	1 COMPARTMENT	(OR APPROVED EQUAL)		SELF RIMMING, 3 HOLE, SATIN FINISH
	FAUCET	DELTA	2174 HDF	3 HOLE, 8" CENTERS 11.25" HIGH SPOUT
	STRAINER DRAIN	ELKAY	LK-35B	METAL HANDLES, HANDWHEEL STOPS
				DRAIN, STRAINER, P-TRAP
P5	URINAL	TOTO USA	UT104E#01	EQUAL 17", PER ADA REQUIREMENTS,
	FLUSH VALVE	TOTO USA	TMU1LN12#CP	SPLIT RING SUPPORT FOR FLUSH VALVE
				.5 GPF SUPPLY STOP, COTTON
P6	MOP BASIN	FIAT	TSB-200	PRECAST TERRAZZO MOP BASIN ,24"X24"X12"
	FAUCET	SPEAKMAN COMMANDER	SC-5811-USA	PROVIDE DEEP SEAL TRAP TO 3" PIPE
	MOP HANGER		889-CC	STEEL STRAINER PLATE
	HOSE & BRACKET		832-AA	
P7	ELECTRIC WATER COOLER HANDICAP	ELKAY	EBFATL-8	TWO LEVEL, ADA COMPLIANT LEAD FREE WATER COOLER, STAINLESS , LEAD FREE, WHEEL CHAIR ACCESS, W/ P TRAPS AND HANDWHEEL STOPS 7.8 GPH, 110V 4.8A EACH
P8	WATERHEATER	AO SMITHRHEEM	BTH-120 Mxi	120000 BTUH INPUT 60 GA; STORAGE
		(OR APPROVED EQUAL)	.98% THERMAL EFF	CONDENSING. PROVIDE AND INSTALL
				ASME APPROVED T& P VALVE, VACUUM
				BREAK AND EXPANSION TANK, HEAT TRAP.
				CONCENTRIC VENT 120 VOLT, 1 PHASE
				138 GAL/HR RECOVERY @ 100 DEG RISE
				TOTAL USABLE STORAGE 42 GAL
				SEE WATER HEATER DETAIL
P9	FLOOR DRAIN	SIOUX CHIEF FINISH LINE	833-23DNR 3"	W TRAP PRIMER, TRAP PRIMER HEAD &
		(OR APPROVED EQUAL)		PIPING, AND PIPE CONNECTIONS
P10	FLOOR SINK	JOSAM	49342A-3-33-8-55-XXX	2" FLOOR SINK, TRAP PRIMER &
		(OR APPROVED EQUAL)		PIPING, & HALF GRATE
P11	WALL	WOODFORD	MODEL 30	FREEZELESS W/ ANTISIPHON
	HYDRANT			VACUUM BREAK, PRESSURE RELIEF
				BRONZE CASING, BRONZE PARTS
C.O.	FLOOR CLEAN OUT	JOSAM	SERIES 56000-3-X-X	NOTECLEAN OUT AND COVER SHALL BE
		OR EQUAL PVC BY		SELECTED ON BASIS OF
		OATEY, SOUIX CHIEF		LOCATION TO BE INSTALLED
		OR SIMILAR PVC MANUF.		
		W/ JONES SYSTEMS CO.		FLUSH MOUNT CLEANOUT PLUG
	WALL CLEAN OUT	JOSAM	SERIES 58710-22-X-X	NOTECLEAN OUT AND COVER SHALL BE
		OR EQUAL PVC BY		SELECTED ON BASIS OF
		OATEY, SOUIX CHIEF		LOCATION TO BE INSTALLED
		OR SIMILAR PVC MANUF.		
		W/ JONES SYSTEMS CO.		FLUSH MOUNT CLEANOUT PLUG

NOTE: PLUMBING CONTRACTOR SHALL VERIFY SIZE AND FIT REQUIREMENTS WITH OTHER TRADES AND OWNER PRIOR TO PURCHASE, FABRICATION AND/OR INSTALLATION FOR ALL PROJECTS.

REV	DATE	INITIAL

PLUMBING PLAN, SCHEDULE AND NOTES

GYMNASIUM/FELLOWSHIP HALL ADDITION FOR UNION HILL CUMBERLAND PRESBYTERIAN CHURCH IN AMERICA

3126 NEVEL DR., HUNTSVILLE AL 35810

D. R. ALDRIDGE, CONSULTANT
256-651-4832

DATE: 7/29/17

SCALE: AS NOTED

ALABAMA REGISTERED PROFESSIONAL ENGINEER NO. 16050 DAVID R. ALDRIDGE, JR. 7/29/17

P-1

SHEET 4 OF 5

RR

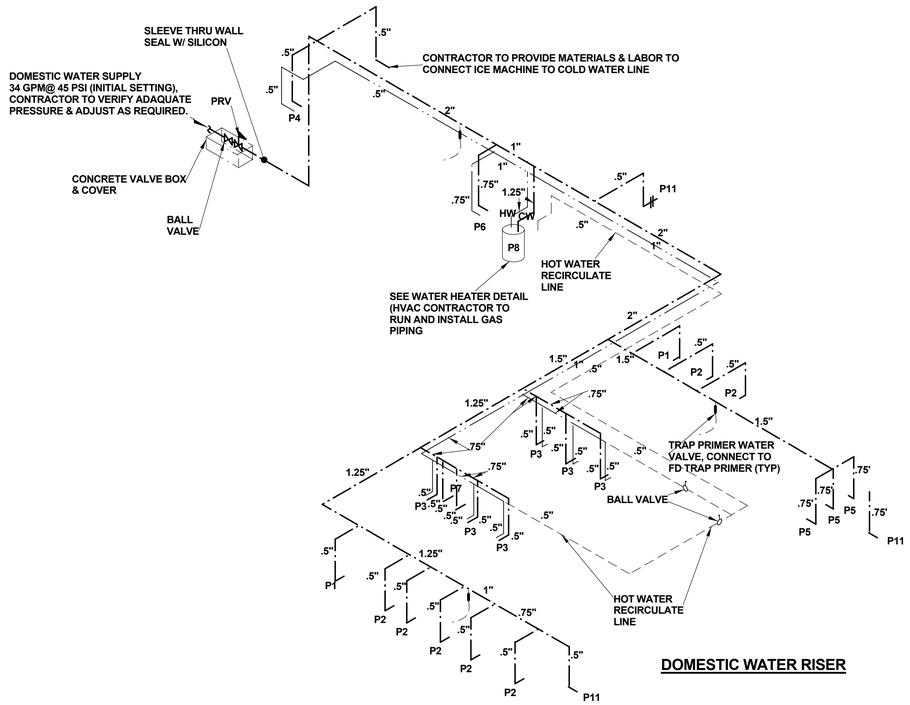

DOMESTIC WATER RISER

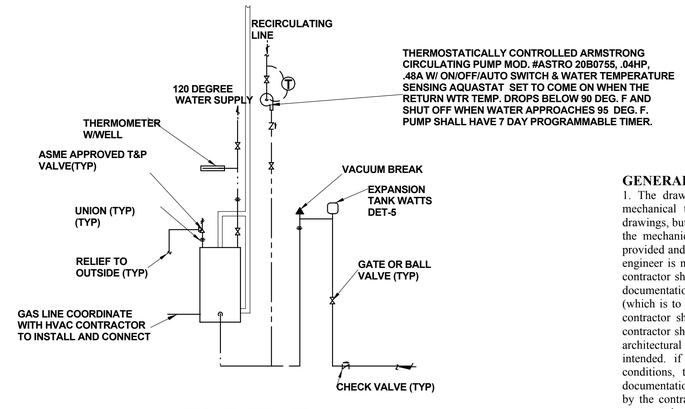

WATER HEATER DETAIL

PROVIDE HEAT TRAP ON WATER INLET AND OUTLET OF WATER HEATER STORAGE TANK. PIPE PER MANUFACTURER REQUIREMENTS. PROVIDE CONCENTRIC VENTING MATERIALS BY WATER HEATER MANUFACTURER.

GENERAL NOTES:

1. The drawing documentation is intended to represent the scope of work for the mechanical task to be performed. Elements and components not included on the drawings, but are necessary and deemed essential for the proper operation and function of the mechanical systems, or required for compliance with applicable codes, shall be provided and installed at no additional cost to the owner, architect and/or engineers. The engineer is not responsible for performance of functions for contractor deviations. The contractor shall provide a cold water line approximately where indicated on the design documentation and connect at an interface point for the baptistery system
(which is to be provided and installed by others)and provide a backflow preventer The contractor shall provide and install his equipment, as indicated on the drawings the contractor shall visit the site, investigate the site conditions, review the mechanical and architectural documentation and satisfy himself that the work can be accomplished as intended. if discrepancies occur within the design documentation and/or the site conditions, the contractor shall suggest, based on his expertise, solutions for the documentation for the architect to review prior to submission of his proposal. Acceptance by the contractor of the design documentation as evidenced by the acceptance of the contractor's proposal by the owner shall indicate that the work can be accomplished in accordance with the documentation. Except for unforeseen items, the construction cost and documentation resulting from changes incurred as a result on unintentional omissions by the architectural design/construction documentation after award shall be the contractor's responsibility. This does not alleviate the contractor from providing successfully inspected, fully functional systems. The contractor shall verify all equipment requirements and submit to the architect for approval prior to purchase fabrication and/or installation. The contractor shall remove all debris from the site on a daily basis.
2. The installation shall be in strict accordance with the 2009 international plumbing code requirements, and all local city and state codes in effect.

PLUMBING NOTES:

1. All plumbing exiting/entering the facilities shall be coordinated with the architectural/civil engineering drawing documentation and the contractor to ensure proper location and installation. The contractor shall, inclusive off but not limited install fixtures (wc, ewc, lav, etc.) and trim, faucets, hand wheel stops, water and sanitary piping, water heater, etc. the contractor shall locate the existing domestic water and soil waste and vent piping and connect to it as indicated on the drawings. Domestic water piping above ground shall be type "l" copper (hard or annealed). Water piping below grade shall be type "k" annealed copper. Copper joints shall be made with no lead silver solder. Water piping below grade shall be continuous with no joints. All joints that have to be made shall be above ground then may continue under ground to final location. All above the frost line water lines, components, valves, etc. shall be insulated. Hot water lines < 1.5" diameter shall have 1.5" of insulation, hot water lines 1.5" and > then 1.5" diameter shall have 2" thick insulation. All cold water lines in unconditioned spaces shall have 2" thick insulation. insulation shall have a resistively value of four or greater per inch of thickness on a flat surface with a mean temperature of 75 deg. f. copper penetrations thru the floor shall be protected with a continuous plastic sleeve. (CPVC pipe and fittings, **upon approval by the plumbing official and listed in the IPC,** may be used in lieu of copper for domestic water piping within the facility). (Schedule 40 PVC pipe and fittings, **upon approval by the plumbing official and listed in the IPC,** may be used in lieu of copper for domestic cold water supply piping to the facility). Water heater shall be provided with heat traps on the supply and return lines. All water piping valves shall be cast brass, cast bronze or wrought copper body as manufactured by crane, NIBCO, Jenkins or Powell. Valve classification and type shall be suited for service pressures used as approved by IPC.
2. Where applicable, the contractor shall coordinate with the owner, and other suppliers for equipment, fixtures etc., to be furnished and installed by others and connected as required by the plumbing contractor. (Example; Baptistery)
3. Soil waste and vent pipe located below grade shall be spun service weight, bell and spigot CISP conforming to ASTM-74 with compressions gaskets conforming to ASTM c-564. Soil, waste, vent pipe and fittings above grade shall be hubless CISP conforming to ASTM a-888 with fittings conforming to ASTM standard 301. All CISP shall be coated inside and out with cold tar finish, (solvent welded plastic materials, **upon approval by the plumbing official and listed in the IPC,** may be used in lieu or CISP for soil waste and vent pipe.). all pipe shall be sloped as required by the IPC.
4. Disinfection of domestic water lines shall be in strict accordance with the IPC and the method as approved by the plumbing official.

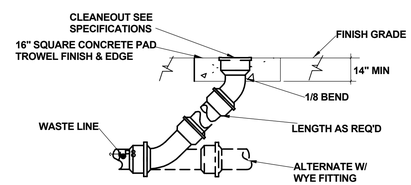

EXTERIOR CLEANOUT DETAIL

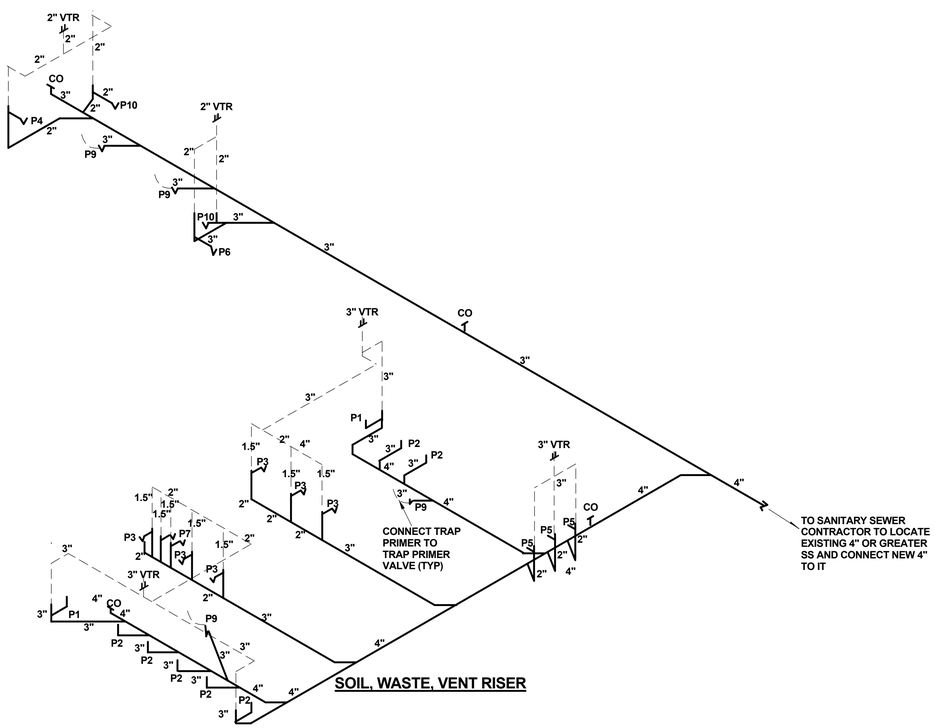

SOIL, WASTE, VENT RISER

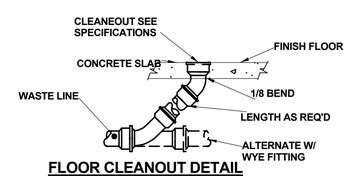

FLOOR CLEANOUT DETAIL

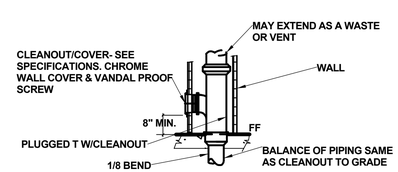

WALL CLEANOUT DETAIL

REV	DATE	INITIAL

PLUMBING DETAILS

GYMNASIUM/FELLOWSHIP HALL ADDITION FOR UNION HILL CUMBERLAND PRESBYTERIAN CHURCH IN AMERICA

3126 NEVEL DR., HUNTSVILLE AL. 35810

D. R. ALDRIDGE, CONSULTANT
256-651-4832

DATE: 7/29/17

SCALE: NTS

ALABAMA REGISTERED PROFESSIONAL ENGINEER NO. 16050 DAVID R. ALDRIDGE, JR. 7/29/17

P-2

SHEET 5 OF 5

RR

SPLIT SYSTEM WITH CONDENSING FURNACE SCHEDULE

SYSTEM BASIS OF DESIGN, MANUFACTURER	TRANE	TRANE	TRANE	TRANE	TRANE	TRANE	TRANE
OUTSIDE AIR CFM	175	830	830	830	830	555	175
SEER	14.0	14.0	14.0	14.0	14.0	14.0	14.0
TOTAL CAPACITY AT ARI, MBH	35.2	2 @ 48.0	2 @ 48.0	2 @ 48.0	2 @ 48.0	2 @ 48.0	41.5
CONDENSING FURNACE							
MARK	F/C-1	F/C-2	F/C-3	F/C-4	F/C-5	F/C-6	F/C-7
SUPPLY FAN							
SUPPLY AIR CFM	1200	3200	3200	3200	3200	3200	1400
EXTERIOR STATIC PRESSURE IN. WG	.50	.50	.50	.50	.50	.50	.50
MOTOR HP	1/2	2 @ 3/4	2 @ 3/4	2 @ 3/4	2 @ 3/4	2 @ 3/4	3/4
VOLT / PHASE	120/1/60	120/1/60	120/1/60	120/1/60	120/1/60	120/1/60	120/1/60
FUEL							
MBH INPUT	77	97	97	97	97	97	80
MBH OUTPUT	73.1	92.15	92.15	92.15	92.15	92.15	76.0
EFFICIENCY	95.0	95.0	95.0	95.0	95.0	95.0	95.0
MODEL	TUH1B080	2 @ TUH1D100	2 @ TUH1D100	2 @ TUH1D100	2 @ TUH1D100	2 @ TUH1D100	TUH1C080
COOLING COIL							
PRESSURE DROP, IN. WG	.30	.30	.30	.30	.30	.30	.30
MODEL	4TXC	2 @ 4TXC	2 @ 4TXC	2 @ 4TXC	2 @ 4TXC	2 @ 4TXC	4TXC
CONDENSING UNIT							
MARK	CU-1	CU-2 & CU-3	CU-4 & CU-5	CU-6 & CU-7	CU-8 & CU-9	CU-10 & CU-11	CU-12
MCA	19	2 @ 26	2 @ 26	2 @ 26	2 @ 26	2 @ 26	23
MAX OCP	30	2 @ 45	2 @ 45	2 @ 45	2 @ 45	2 @ 45	40
VOLT / PHASE	240/1/60	240/1/60	240/1/60	240/1/60	240/1/60	240/1/60	240/1/60
MODEL	4TTB4036	2 @ 4TTB4048	2 @ 4TTB4048	2 @ 4TTB4048	2 @ 4TTB4048	2 @ 4TTB4048	4TTB4042
OPTIONS:	1,2,3,4	1,2,3,4	1,2,3,4	1,2,3,4	1,2,3,4	1,2,3,4	1,2,3,4

1. PROVIDE WITH 7 DAY PROGRAMMABLE THERMOSTAT.
2. PROVIDE ELECTRONIC PROGRAMMABLE THERMOSTAT WITH NIGHT SET-BACK CAPABILITIES
3. PROVIDE LOW AMBIENT CONTROLS FOR OPERATION DOWN TO 30 DEGREES F.
4. PROVIDE THERMAL EXPANSION VALVE

NOTES:
INSTALL UNITS PER MANUFACTURERS SPECIFICATIONS

FAN SCHEDULE

MARK	EF-1, EF-2
TYPE	CEILING MOUNTED
DRIVE	DIRECT
MOTOR HP / W	135 W
AIRFLOW (CFM)	450
STATIC PRESSURE (IN WC)	.25
ELECTRICAL (VOLTS/PH/HZ)	120/1/60
MANUFACTURER	COOK
MODEL	GC-622
ACCESSORIES	DISCONNECT, BACK-DRAFT DAMPER,
CONTROL	SWITCH W/LIGHTS

NOTES:
1. DISCHARGE THRU ROOF CAP.

ROOF CAP SCHEDULE

MARK	IC-1	EC-3
SERVICE	INTAKE	EXHAUST
CONSTRUCTION	ALUMINUM	ALUMINUM
THROAT AREA (SQUARE FEET)	.394	1.485
FACE AREA (SQUARE FEET)	1.38	3.08
AIRFLOW (CFM)	175	900
STATIC PRESSURE DROP (IN WC)	0.1	0.1
MANUFACTURER	COOK	COOK
MODEL	PR-8	PR-16
ACCESSORIES	1, 3, 4	2, 3, 4

ACCESSORIES:
1. INSECT SCREEN
2. BIRD SCREEN
3. PREFABRICATED ROOF CURB FOR SLOPING ROOF.
4. FACTORY APPLIED EPOXY FINISH, COLOR SELECTED BY ARCHITECT.

REGISTER, GRILLE & DIFFUSER SCHEDULE

SYM	TYPE	MANUFACTURER	MODEL	REMARKS
CD	CEILING DIFFUSER	TITUS	250-AA	BAKED WHITE W/VOLUME DAMPER
RR	RETURN REGISTER	TITUS	50F	BAKED WHITE W/VOLUME DAMPER
RG	RETURN GRILLE	TITUS	4FL	BAKED WHITE FINISH
TG	TRANSER GRILLE	TITUS	50F	BAKED WHITE FINISH

NOTES:
1. REGISTERS, GRILLES, & DIFFUSERS HAVE BEEN SPECIFIED AS TITUS TO ESTABLISH QUALITY. EQUAL PRODUCTS BY ANEMOSTAT OR METALAIRE WILL BE CONSIDRED

LOUVER SCHEDULE

MARK	IL-1
SERVICE	INTAKE
CONSTRUCTION	ALUMINUM
THROAT AREA (SQUARE FEET)	5.78
LOUVER SIZE (INCHES)	42X42
AIRFLOW (CFM)	4050
MANUFACTURER	DOWCO
MODEL	LEC-04

ACCESSORIES:
1. INSECT SCREEN
2. FACTORY APPLIED EPOXY FINISH, COLOR SELECTED BY ARCHITECT.

ROUND DUCT SYSTEM GAGES

ROUND DUCTWORK, GALVANIZED STEEL, GAGE SELECTION

DUCT DIAMETER, IN.	MAXIMUM 2-IN. WG STATIC POSITIVE		MAXIMUM 10-IN. WG STATIC POSITIVE		MAXIMUM 2-IN. WG STATIC NEGATIVE	
	SPIRAL SEAM GAGE, IN.	LONGITUDINAL SEAM GAGE, IN.	SPIRAL SEAM GAGE, IN.	LONGITUDINAL SEAM GAGE, IN.	SPIRAL SEAM GAGE, IN.	LONGITUDINAL SEAM GAGE, IN.
3-8	28	28	26	24	28	24
9-14	28	26	26	24	26	24
15-26	26	24	24	22	24	22
27-36	24	22	22	20	22	20

RECTANGULAR DUCT SYSTEM GAGES

RECTANGULAR DUCTWORK, 1/2-IN. WG STATIC PRESSURE POSITIVE OR NEGATIVE, UP TO 2,000 FPM, BASED ON PROPER REINFORCEMENTS SPACED AT 10-FT INTERVALS.

LARGEST DIMENSION, INCHES	GALVANIZED STEEL GAGE	ALUMINUM, - B&S GAGE	COPPER, - B&S GAGE
THROUGH 26	26	24	24
27-30	24	22	20

MECHANICAL NOTES

1. DUCT SIZES ARE BASED ON FREE AREA OPENING. SUPPLY DUCTS LOCATED IN INTERIOR UNCONDITIONED SPACES SHALL HAVE AN INSULATION RATING OF NO LESS THAN R-6. SUPPLY AND RETURN DUCTS LOCATED IN EXTERIOR AREAS SHALL HAVE AN INSULATION RATING OF NO LESS THAN R-8. EXTERIOR INSULATION (IF USED) SHALL INCLUDE A VAPOR BARRIER. THE CONTRACTOR WILL ADJUST ACCORDINGLY TO COMPENSATE FOR DUCT LINER (IF USED). ROUND AND RECTANGULAR EQUIVALENT DIMENSIONS ARE ALLOWABLE.

2. THE CONTRACTOR SHALL SELECT DIFFUSERS WITH A NOISE CRITERIA RATING OF NO GREATER THAN NC 40 BASED ON THE SPECIFIED FLOWRATES. DIFFUSERS SHALL CONSIDER THROW AND DROP PERFORMANCE TO PROVIDE APPROPRIATE COVERAGE TO THE CONDITIONED AREAS. ALL DIFFUSERS SHALL PROVIDE FOR ADJUSTABLE FLOWRATE: CONTRACTOR SHALL BE RESPONSIBLE FOR BALANCING TO DESIGN FLOWRATES.

3. ALL 90 DEG. ELBOWS SHALL INCLUDE TURNING VANES.

4. INSTALL A SMOKE DETECTOR IN THE RETURN DUCTS AND SUPPLY DUCTS PRIOR TO FRESH AIR INTAKE UPON ACTIVATION THE SMOKE DETECTOR SHALL SHUT DOWN THE AHU. THE DUCT SMOKE DETECTOR SHALL ALSO BE CONNECTED TO A FIRE ALARM SYSTEM IF SYSTEM IS REQUIRED BY CODE WHICH UPOD ACTIVATION SHALL ACTIVATE A VISIBLE AND AUDIBLE SIGNAL. DUCT DETECTORS TO BE INSTALLED ON ALL UNITS OVER 2000 CFM, AND ALL UNITS THAT SERVE EGRESS CORRIDORS.

5. MECHANICAL CONTRACTOR TO COORDINATE EXACT LOCATION OF DIFFUSERS AND REGISTERS WITH GRID AND LIGHTS.

6. REFERENCE TO SPECIFIC MANUFACTURERS ARE USED IN TO ESTABLISH MINIMUM PERFORMANCE REQUIREMENTS AND QUALITY. OTHER MANUFACTURER'S WITH EQUAL OR BETTER QUALITY EQUIPMENT ARE ALLOWED TO SUBSTITUTE THEIR PRODUCTS. EQUAL MANUFACTURER'S ARE CARRIER, AMERICAN STANDARD, RHEEM, AND LENNOX.

7. ALL TAKE-OFFS SHALL INCLUDE MANUAL DAMPERS. BALANCE TO DESIGN FLOWRATES BY MECHANICAL CONTRACTOR.

8. DUCTS PENETRATING WALLS OR PARTITIONS HAVING A FIRE RESISTANCE RATING OF 1 BUT LESS THAN 3 HOURS SHALL INCLUDE FIRE DAMPERS AT THE PENETRATION. DAMPERS SHALL HAVE A FIRE RESISTANCE RATING NO LESS THAN 1.5 HR. USE OF STATIC RATED DAMPERS IS ACCEPTABLE SINCE SYSTEM IS DESIGNED FOR AUTOMATIC SHUTDOWN IN CASE OF FIRE/SMOKE.

9. ALL EXTERIOR DUCTWORK TO BE INSULATED (MINIMUM R-6 INSULATION RATING) AND COVERED BY A WEATHER PROOF, WATER PROOF EXTERIOR GALVANIZED STEEL COVERING, MINIMUM THICKNESS TO BE 20 GAUGE. COVER SHALL BE PAINTED, COLOR TO BE SELECTED BY ARCHITECT.

10. MECHANICAL CONTRACTOR TO VERIFY EXACT LOCATION OF T'STATS WITH OWNER.

11. ROUTE CONDENSATE DRAINS TO EXTERIOR WALL TO CLOSEST DRY WELL. ROUTE THRU CONDENSATE OVERFLOW LINE, SEE DETAIL.

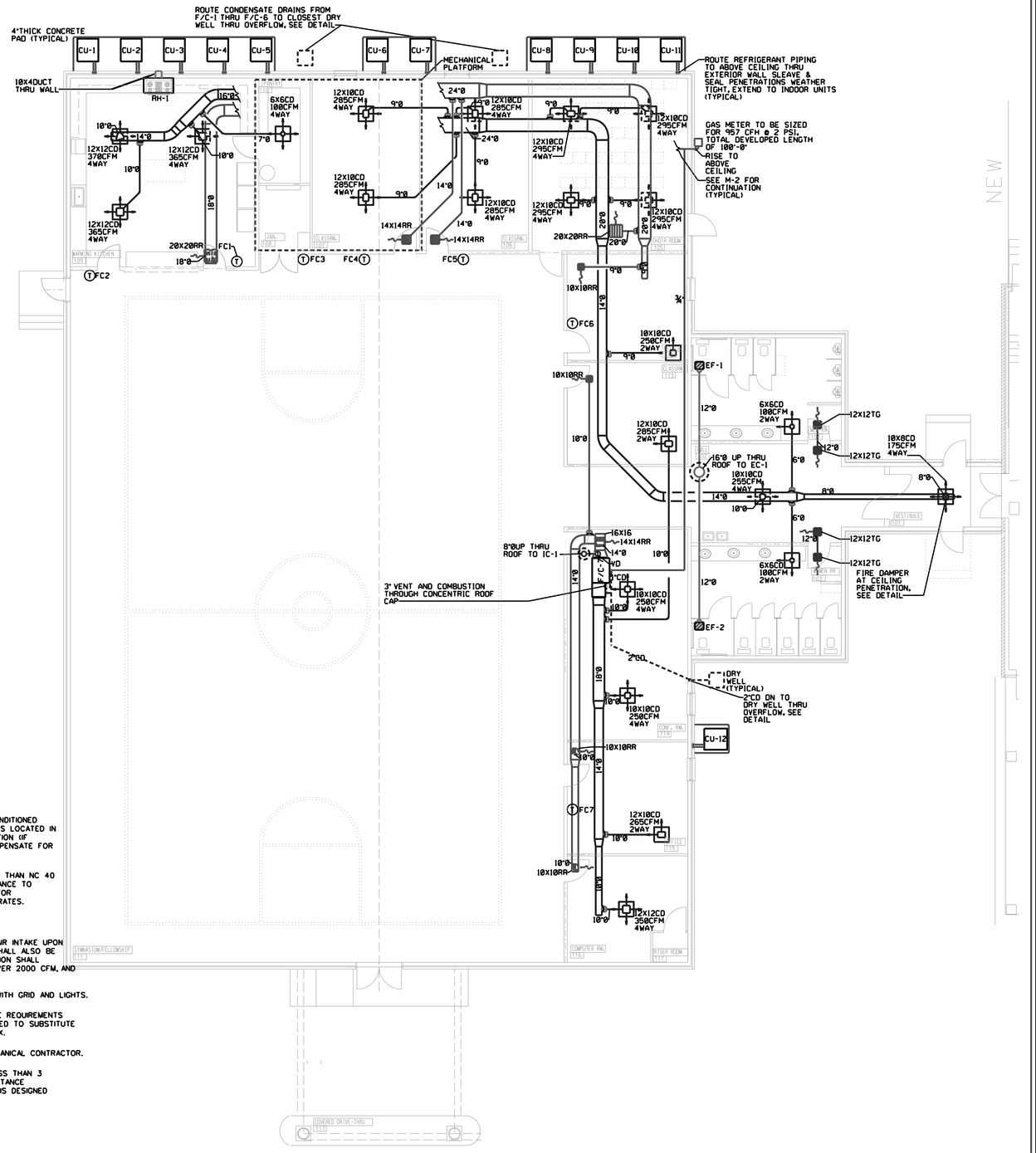

MECHANICAL FLOOR PLAN

SCALE: 1/8" = 1'-0"

MECHANICAL LEGEND

SD - SMOKE DETECTOR
VD - VOLUME DAMPER
(T) - THERMOSTAT

ALABAMA LICENSED No. 25722 PROFESSIONAL ENGINEER STEPHEN EDWARD SLANTON
1-18-2018

TOTAL DESIGN ENGINEERING
1014 MERIDIAN STREET, SUITE B
HUNTSVILLE, ALABAMA 35801
PHONE: 256-539-8585, FAX: 256-539-9508
EMAIL: SCLANTON@TOTALDESIGNENGINEERING.COM
RSTEADMAN@TOTALDESIGNENGINEERING.COM

A BUILDING ADDITION FOR
UNION HILL CUMBERLAND PRESBYTERIAN CHURCH
HUNTSVILLE, ALABAMA

MECHANICAL FLOOR PLAN

DRAWN	CHECKED	DATE
JAQ	SEC/RJS	1/18/2018

SHEET M-1 OF 4

REV.	DATE

JOB # TSK-18-011

RANGE HOOD SCHEDULE

MARK	RH-1
TYPE	RESIDENTIAL RANGE HOOD W/ FIRE SUPPRESSION
SIZE	1 @ 48"L X 22"W X 10"H
EXHAUST AIR	600
FILTERS	BAFFLE STYLE
EXHAUST COLLAR (IN.)	10"X4"
MANUFACTURER	BROAN
ACCESSORIES	GUARDIAN G300B FIRE SUPPRESSION SYSTEM
CONTROL	HOOD MOUNTED CONTROL PANEL AND MANUAL PULL STATION

RANGE HOOD NOTES

THE RANGE HOOD SHALL BE EQUAL TO BROAN HOOD WITH GUARDIAN FIRE SUPPRESSION.

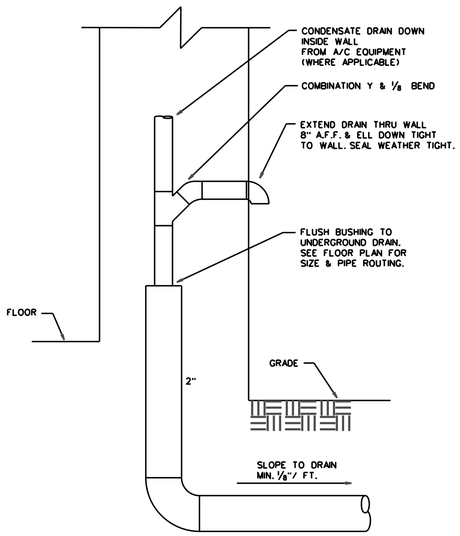

CONDENSATE DRAIN OVERFLOW DETAIL

NOT TO SCALE

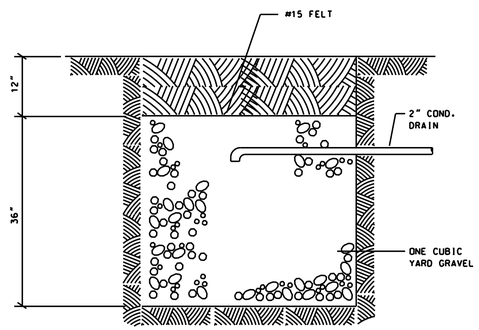

DRY WELL DETAIL

NOT TO SCALE

PIPE SUPPORT SCHEDULE	
PIPE SIZE	HANGER SPACING
1/2"	6'
3/4"	6'
1"	8'
1 1/4"	8'
1 1/2"	8'
2"	10'
2 1/2"	10'
3"	12'
4"	12'
6"	12'
8"	12'

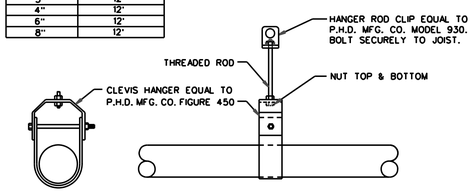

GAS PIPE HANGER DETAIL

NOT TO SCALE

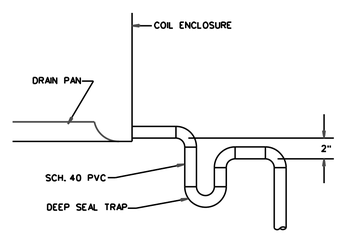

TYPICAL CONDENSATE CONNECTION & TRAP

NOT TO SCALE

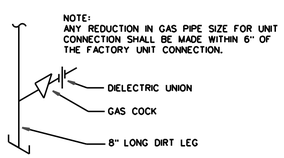

UNIT CONNECTION DETAIL

NOT TO SCALE

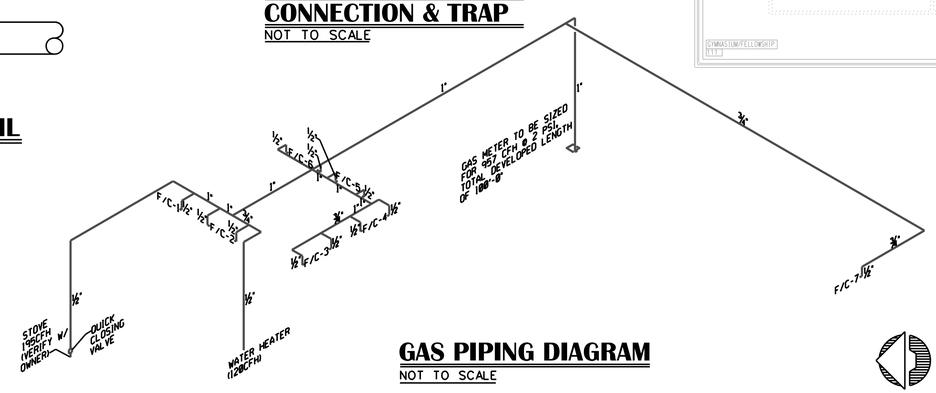

GAS PIPING DIAGRAM

NOT TO SCALE

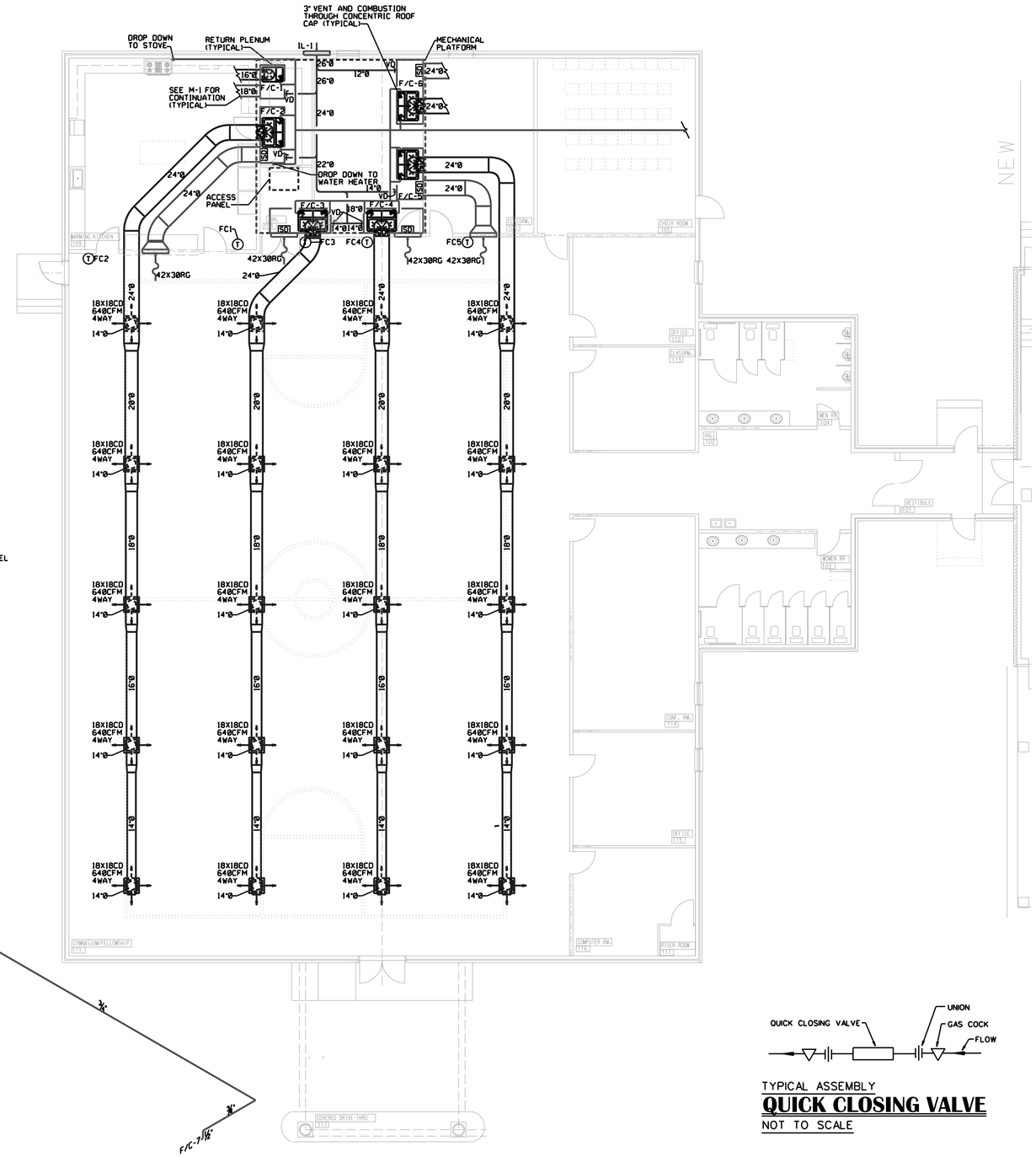

MECHANICAL FLOOR PLAN

SCALE: 1/8" = 1'-0"

TYPICAL ASSEMBLY

QUICK CLOSING VALVE

NOT TO SCALE

MECHANICAL LEGEND

- SD - SMOKE DETECTOR
- VD - VOLUME DAMPER
- (T) - THERMOSTAT

ALABAMA LICENSED No. 25722 PROFESSIONAL ENGINEER EDWARD STANTON SCLANTON
1-18-2018

TOTAL DESIGN ENGINEERING
1014 MERIDIAN STREET, SUITE B
HUNTSVILLE, ALABAMA 35801
PHONE: 256-539-8585, FAX: 256-539-9508
EMAIL: SCLANTON@TOTALDESIGNENGINEERING.COM
RSTEADMAN@TOTALDESIGNENGINEERING.COM

A BUILDING ADDITION FOR
UNION HILL CUMBERLAND PRESBYTERIAN CHURCH
HUNTSVILLE, ALABAMA

MECHANICAL FLOOR PLAN

DRAWN	CHECKED	DATE
JAQ	SEC/RJS	1/18/2018

SHEET M-2 OF 4

REV.	DATE

JOB # TSK-18-011

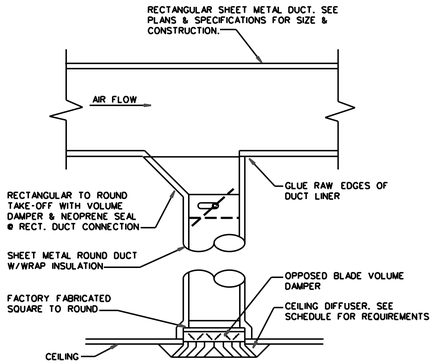

DIFFUSER DUCTING DETAIL
NOT TO SCALE

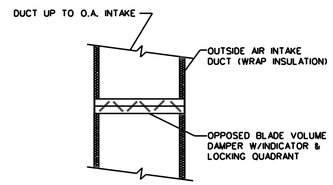

VOLUME DAMPER DETAIL
NOT TO SCALE

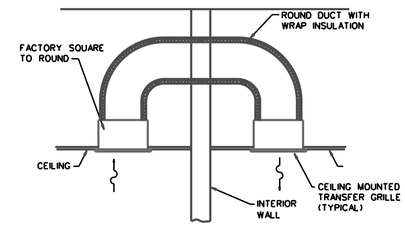

TRANSFER GRILLE DETAIL
NOT TO SCALE

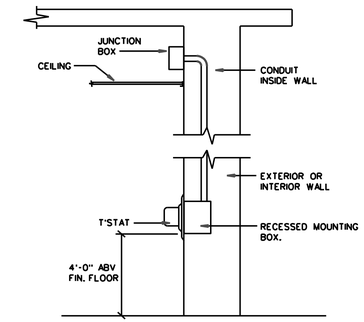

T'STAT MOUNTING DETAIL
NOT TO SCALE

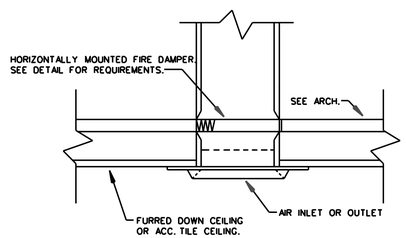

HORIZONTAL FIRE DAMPER MOUNTING DETAIL
NOT TO SCALE

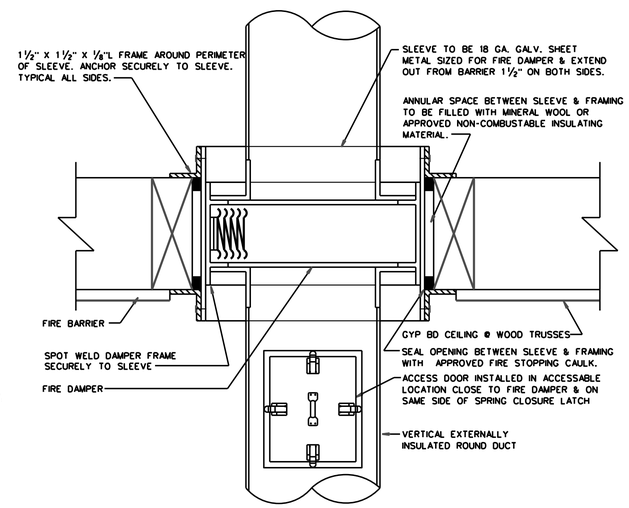

ROUND DUCT
HORIZONTAL FIRE DAMPER MOUNTING DETAIL
NOT TO SCALE

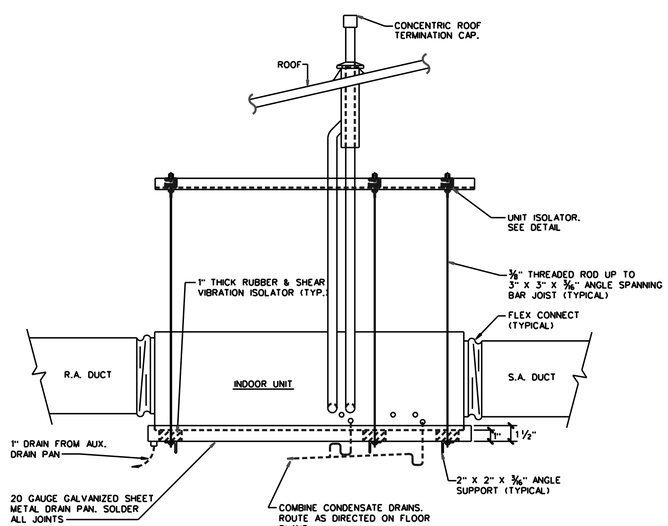

FURNACE/COIL
INDOOR UNIT MOUNTING DETAIL
NOT TO SCALE

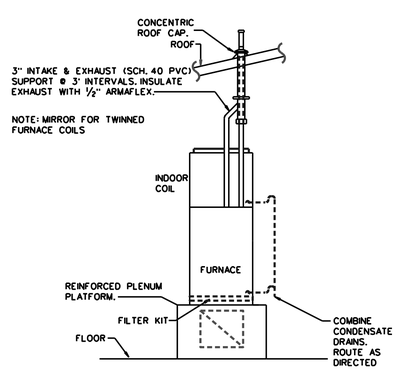

FURNACE MOUNTING DETAIL
NOT TO SCALE

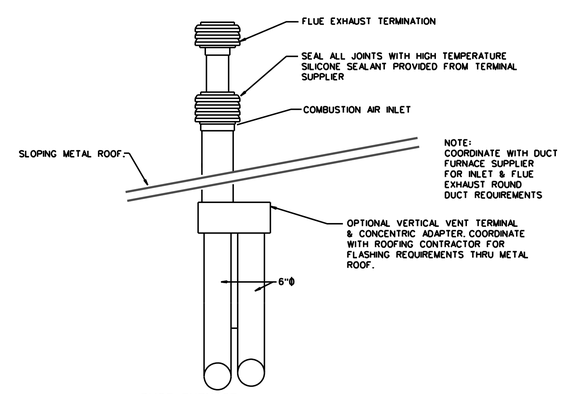

DUCT FURNACE
CONCENTRIC FLUE THRU ROOF DETAIL
NOT TO SCALE

ALABAMA LICENSED No. 25722 PROFESSIONAL ENGINEER 1-18-2018 STEVEN EDWARD CLANTON JR.

TOTAL DESIGN ENGINEERING
1014 MERIDIAN STREET, SUITE B
HUNTSVILLE, ALABAMA 35801
PHONE: 256-539-8585, FAX: 256-539-9508
EMAIL: SCLANTON@TOTALDESIGNENGINEERING.COM
RSTEADMAN@TOTALDESIGNENGINEERING.COM

A BUILDING ADDITION FOR
UNION HILL CUMBERLAND PRESBYTERIAN CHURCH
HUNTSVILLE, ALABAMA

MECHANICAL DETAILS

DRAWN	CHECKED	DATE
JAQ	SEC/RJS	1/18/2018

SHEET M-3 OF 4

REV.	DATE

JOB # TSK-18-011

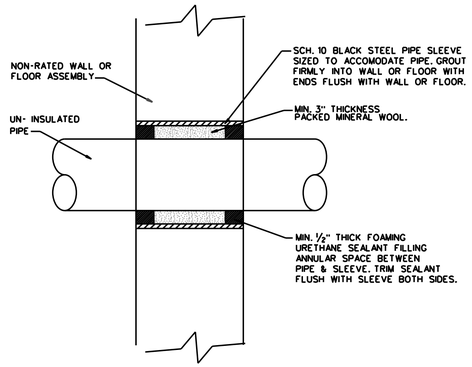

NON-RATED PIPE SLEEVE DETAIL

NOT TO SCALE

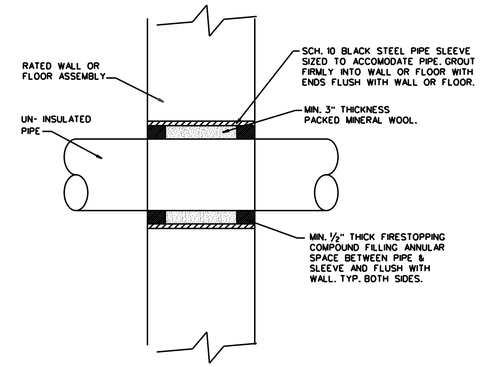

U.L. LISTING C-AJ-1009

RATED PIPE SLEEVE DETAIL

NOT TO SCALE

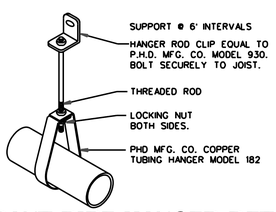

REFRIGERANT PIPE HANGER DETAIL

NOT TO SCALE

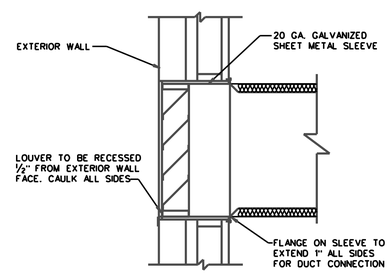

LOUVER MOUNTING DETAIL

NOT TO SCALE

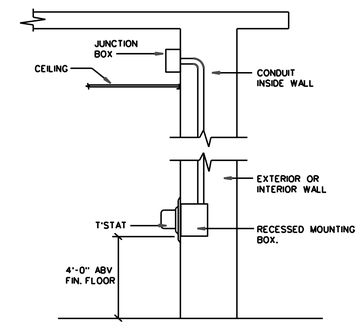

TSTAT MOUNTING DETAIL

NOT TO SCALE

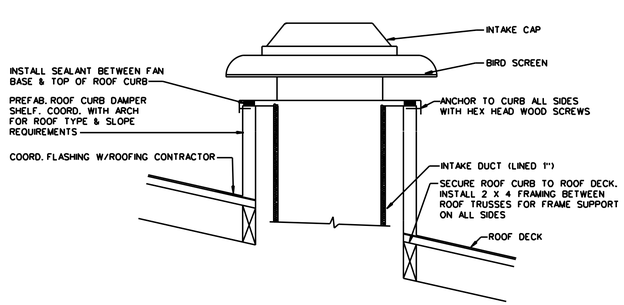

OUTSIDE AIR INTAKE CAP DETAIL

NOT TO SCALE

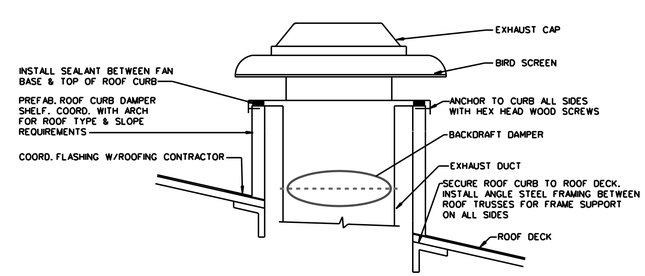

EXHAUST CAP DETAIL

NOT TO SCALE

ALABAMA LICENSED No. 25722 PROFESSIONAL ENGINEER STEPHEN EDWARD CLANTON JR.
1-18-2018

TOTAL DESIGN ENGINEERING
1014 MERIDIAN STREET, SUITE B
HUNTSVILLE, ALABAMA 35801
PHONE: 256-539-8585, FAX: 256-539-9508
EMAIL: SCLANTON@TOTALDESIGNENGINEERING.COM
RSTEADMAN@TOTALDESIGNENGINEERING.COM

A BUILDING ADDITION FOR
UNION HILL CUMBERLAND PRESBYTERIAN CHURCH
HUNTSVILLE, ALABAMA

MECHANICAL DETAILS

DRAWN	CHECKED	DATE
JAQ	SEC/RJS	1/18/2018

SHEET M-4 OF 4

REV.	DATE

JOB # TSK-18-011

POWER PLAN LEGEND

↷	BRANCH CIRCUIT CONCEALED IN CEILING OR WALL. HOME RUN TO PANELBOARD AND 20A, SINGLE POLE BREAKER UNO. CIRCUIT NUMBER SHOWN ADJACENT TO HOME RUN.
⇢	BRANCH CIRCUIT CONCEALED BELOW FLOOR OR UNDERGROUND.
⌒	(3) #12 AND (1) #12(G) IN 3/4" CONDUIT, OR PER NATIONAL ELECTRIC CODE. FOR MORE THAN (3) CONDUCTORS, HAS MARKS INDICATE THE NUMBER OF CONDUCTORS REQUIRED. LARGE HASH INDICATES NEUTRAL CONDUCTOR
⊖ WP GFI	120V, 20A, 3-WIRE DUPLEX RECEPTACLE--MOUNT 18" AFF, UNO. WP INDICATES WEATHER PROOF ENCLOSURE, GFI INDICATES GROUND FAULT INTERRUPTER.
◒ WP GFI	120V, 20A, 3-WIRE DUPLEX RECEPTACLE--MOUNT 18" ABOVE COUNTER UNO. GFI INDICATES GROUND FAULT INTERRUPTER.
□	NON-FUSED DISCONNECT. SEE EQUIPMENT SCHEDULE FOR AMPS / # OF POLES / NEMA ENCLOSURE TYPE. MOUNT 48" AFF, UNO.
Ⓙ	JUNCTION BOX. SIZE PER NATIONAL ELECTRICAL CODE OR AS INDICATED ON DRAWINGS. COORDINATE FIELD WIRING REQUIREMENTS FROM JUNCTION BOX TO EQUIPMENT INSTALLED BY OWNER.
X ▨	POWER PANEL. SEE PANEL SCHEDULES FOR MORE INFORMATION. X INDICATES THE PANEL DESIGNATION.
Ⓜ	ELECTRIC METER. PROVIDE IN ACCORDANCE WITH UTILITY COMPANY SPECIFICATIONS.

LIGHTING PLAN LEGEND

↷	BRANCH CIRCUIT CONCEALED IN CEILING OR WALL. HOME RUN TO PANELBOARD AND 20A, SINGLE POLE BREAKER UNO. CIRCUIT NUMBER SHOWN ADJACENT TO HOME RUN.
⌒	(3) #12 AND (1) #12(G) IN 3/4" CONDUIT, OR PER NATIONAL ELECTRIC CODE. FOR MORE THAN (3) CONDUCTORS, HAS MARKS INDICATE THE NUMBER OF CONDUCTORS REQUIRED. LARGE HASH INDICATES NEUTRAL CONDUCTOR
$	120V, 20A, SINGLE-POLE SWITCH--MOUNT 48" AFF, UNO.
$\$_3$	120V, 20A, 3-WAY SWITCH--MOUNT 48" AFF, UNO.
$\$_4$	120V, 20A, 4-WAY SWITCH--MOUNT 48" AFF, UNO.
▭ X	2' X 4' RECESSED MOUNTED LIGHTING FIXTURE, X DENOTES FIXTURE MARK INDICATED IN FIXTURE SCHEDULE.
▭ X	2' X 4' SURFACE MOUNTED LIGHTING FIXTURE, X DENOTES FIXTURE MARK INDICATED IN FIXTURE SCHEDULE.
⊗ X	WALL MOUNTED EXIT SIGN / EMERGENCY LIGHT BATTERY PACK COMBO UNIT, DARKENED AREA INDICATES LIGHTED FACE, X DENOTES FIXTURE MARK INDICATED IN FIXTURE SCHEDULE.
X	EMERGENCY LIGHT UNIT WITH SELF CONTAINED SEALED BATTERY. X DENOTES FIXTURE MARK INDICATED IN FIXTURE SCHEDULE.
☼	EXTERIOR WALL MOUNTED FIXTURE SUITABLE FOR INSTALLATION IN WET LOCATION. X DENOTES FIXTURE MARK INDICATED IN FIXTURE SCHEDULE.
▫ □	POLE MOUNTED PARKING AREA LIGHT. X DENOTES FIXTURE MARK INDICATED IN FIXTURE SCHEDULE.
C	LIGHTING CONTACTOR. SEE LIGHTING CONTROL DIAGRAMS FOR MORE INFORMATION.
⧅	EXHAUST FAN. COORDINATE WIRING REQUIREMENTS WITH MECHANICAL CONTRACTOR PRIOR TO ROUGH-IN.

ELECTRICAL SPECIFICATIONS

PART 1 - GENERAL

1.1 GENERAL

THE DRAWINGS AND SPECIFICATIONS ARE INTENDED TO REPRESENT THE SCOPE OF WORK FOR THE ELECTRICAL TASK TO BE PERFORMED. ELEMENTS AND COMPONENTS NOT INCLUDED ON THE DRAWINGS, BUT ARE NECESSARY AND DEEMED ESSENTIAL FOR THE PROPER OPERATION AND FUNCTION OF THE ELECTRICAL SYSTEMS, OR REQUIRED FOR COMPLIANCE WITH APPLICABLE CODES, SHALL BE PROVIDED AND INSTALLED AT NO ADDITIONAL COST TO THE OWNER, ARCHITECT, AND/OR ENGINEERS. THE CONTRACTOR SHALL PROVIDE AND INSTALL HIS EQUIPMENT AND INSTALL AND CONNECT EQUIPMENT AND FIXTURES FURNISHED BY OTHERS.

1.2 SCOPE OF WORK

FURNISH AND INSTALL ALL MATERIALS AND EQUIPMENT AND PROVIDE ALL LABOR REQUIRED AND NECESSARY TO COMPLETE THE WORK SHOWN ON THE DRAWINGS AND ALL OTHER WORK NOT SPECIFICALLY STATED, BUT REASONABLY INFERRED FOR A COMPLETE AND USEABLE SYSTEM. THE CONTRACTOR SHALL VERIFY ALL EQUIPMENT REQUIREMENTS AND SUBMIT TO THE ARCHITECT FOR APPROVAL PRIOR TO PURCHASE, FABRICATION, AND/OR INSTALLATION. THE SCOPE OF WORK SHALL INCLUDE TESTING TO REASONABLY SHOW THAT THE SYSTEM COMPONENTS MEET THE SPECIFIED REQUIREMENTS. THIS PROJECT INCLUDES ELECTRICAL SERVICE, GENERAL POWER, GENERAL LIGHTING AND DEMOLITION.

1.3 INSPECTION OF SITE

THE CONTRACTOR SHALL INSPECT THE SITE OF THE NEW CONSTRUCTION AND PREMISES OF THE EXISTING BUILDING AND SHALL COMPARE CONDITIONS THEREIN WITH WORK SHOWN ON THE DRAWINGS. HE SHALL BECOME THOROUGHLY FAMILIAR WITH CONDITIONS WHICH WILL AFFECT HIS WORK, AS NO ALLOWANCE IS TO BE MADE FOR LACK OF KNOWLEDGE CONCERNING SUCH CONDITIONS AFTER THE CONTRACT IS SIGNED. HE SHALL REPORT IMMEDIATELY TO THE OWNER ANY DISCREPANCIES WHICH HIS INSPECTION MAY REVEAL DURING THE BIDDING PERIOD IN ORDER THAT MISUNDERSTANDINGS AT A LATER DATE MAY BE PREVENTED. THE CONTRACTOR SHALL SUGGEST, BASED ON HIS EXPERTISE, SOLUTION FOR THE DOCUMENTATION FOR THE ARCHITECT TO REVIEW PRIOR TO SUBMISSION OF HIS PROPOSAL. ACCEPTANCE BY THE CONTRACTOR OF THE DESIGN DOCUMENTATION AS EVIDENCED BY THE ACCEPTANCE OF THE CONTRACTOR’S PROPOSAL BY THE OWNER SHALL INDICATE THAT THE WORK CAN BE ACCOMPLISHED IN ACCORDANCE WITH THE DOCUMENTATION. EXCEPT FOR UNFORESEEN ITEMS, THE CONSTRUCTION COST AND DOCUMENTATION RESULTING FROM CHANGES INCURRED AS A RESULT ON UNINTENTIONAL OMISSIONS BY THE ARCHITECTURAL DESIGN/CONSTRUCTION DOCUMENTATION AFTER AWARD SHALL BE THE CONTRACTOR’S RESPONSIBILITY. THIS DOES NOT ALLEVIATE THE CONTRACTOR FROM PROVIDING SUCCESSFULLY INSPECTED, FULLY FUNCTIONAL SYSTEMS.

1.4 CODES, PERMITS, AND INSPECTIONS

WORK SHALL BE PERFORMED IN ACCORDANCE WITH THE LATEST PUBLISHED NATIONAL ELECTRIC CODE, NATIONAL ELECTRIC SAFETY CODE, STATE OF ALABAMA BUILDING CODES, AND OTHER NATIONAL, LOCAL, AND STATE LAWS, ORDINANCES RULES, AND REGULATIONS RELATING TO THE WORK. WHERE THE DRAWINGS OR SPECIFICATIONS EXCEED THESE REQUIREMENTS, THE SPECIFICATIONS SHALL GOVERN. IN NO CASE SHALL WORK BE INSTALLED CONTRARY TO OR BELOW THE MINIMUM LEGAL STANDARDS. THE CONTRACT SHALL INCLUDE PAYMENT OF PERMIT AND INSPECTION FEES REQUIRED FOR INSTALLATION OF THE ELECTRICAL WORK. ALSO INCLUDE THAT PORTION OF THE BUILDING PERMIT FOR WORK PERTAINING TO THIS BRANCH, WHERE APPLICABLE. WORK SHALL BE INSPECTED AND APPROVED BY THE INSPECTION AGENCY HAVING JURISDICTION AND A CERTIFICATE OF APPROVAL SHALL BE DELIVERED TO THE OWNER.

1.5 GUARANTEE

THIS CONTRACTOR SHALL GUARANTEE ALL WORKMANSHIP AND MATERIALS INSTALLED UNDER THIS CONTRACT FOR A PERIOD OF ONE YEAR FROM DATE OF FINAL ACCEPTANCE. MATERIALS OR WORKMANSHIP PROVING TO BE DEFECTIVE DURING THIS PERIOD SHALL BE REPLACED BY THIS CONTRACTOR WITHOUT COST TO THE OWNER.

1.6 EQUIPMENT SELECTION AND APPROVAL

THE SELECTION OF MATERIALS AND EQUIPMENT TO BE FURNISHED UNDER THIS CONTRACT SHALL BE IN STRICT ACCORDANCE WITH THESE SPECIFICATIONS. WHERE TRADE NAMES, BRANDS, OR MANUFACTURER OF EQUIPMENT OR MATERIALS ARE LISTED IN THE SPECIFICATIONS, THE WORDS "OR APPROVED EQUAL" SHALL BE UNDERSTOOD TO APPEAR THEREAFTER. APPROVAL OF EQUALITY IS REQUIRED BY THE OWNER.

1.7 SHOP DRAWINGS

THE CONTRACTOR SHALL SUBMIT 3 SETS OF SHOP DRAWINGS, WHICH SHALL INCLUDE EQUIPMENT FURNISHED AS APPLICABLE TO HIS DISCIPLINE. THE SHOP DRAWINGS SHALL INCLUDE BUT NOT BE LIMITED TO SERVICE ENTRANCE EQUIPMENT, POWER PANELS OR LOAD CENTERS, LIGHT FIXTURES, AND OUTLET DEVICES.

1.8 LOCATION COORDINATION

COORDINATE WORK WITH OTHER TRADES TO AVOID CONFLICT AND TO PROVIDE CORRECT ROUGH-IN AND CONNECTION FOR EQUIPMENT FURNISHED UNDER OTHER TRADES THAT REQUIRE ELECTRICAL CONNECTIONS. VERIFY EQUIPMENT DIMENSIONS AND REQUIREMENTS WITH PROVISIONS SPECIFIED UNDER THIS SECTION.

1.9 PROTECTION OF EQUIPMENT

THIS CONTRACTOR SHALL BE ENTIRELY RESPONSIBLE FOR THE PROTECTION OF HIS MATERIALS AND EQUIPMENT DURING ALL STAGES OF CONSTRUCTION, BOTH BEFORE AND AFTER INSTALLATION, UNTIL THE WORK IS ACCEPTED BY THE OWNER.

1.10 SITE CLEANUP

AFTER ALL OTHER WORK HAS BEEN ACCOMPLISHED, CLEAN ALL EXPOSED CONDUIT, FIXTURES, EQUIPMENT, AND SUPPORT. TOUCH UP PAINT ON ANY EQUIPMENT SCRAPED, SCRATCHED OR DAMAGED DURING CONSTRUCTION.

LEAVE ALL AREAS INVOLVING ELECTRICAL WORK IN A CONDITION SATISFACTORY TO THE OWNER. REMOVE ALL CRATES, CARDBOARD, PACKING MATERIAL, WASTE MATERIAL, AND OTHER DEBRIS LEFT OVER FROM CONSTRUCTION. ALL DEBRIS SHOULD BE REMOVED FROM THE SITE ON A DAILY BASIS.

1.11 BUILDING SERVICE

THE CONTRACTOR SHALL MAKE ALL NECESSARY ARRANGEMENTS WITH AND MEET ALL REQUIREMENTS OF PUBLIC SERVICE TO OBTAIN THE 600 AMP, 120/240 VOLT, SINGLE PHASE, THREE WIRE ELECTRIC SERVICE FOR THE BUILDING. THE OWNER SHALL PROVIDE TO THE ELECTRICAL CONTRACTOR A SINGLE POINT OF CONTACT TO ENSURE COORDINATION OF ALL ELECTRICAL SERVICE REQUIREMENTS.

1.12 TEMPORARY SERVICE FOR CONSTRUCTION

THIS CONTRACTOR SHALL MAKE APPLICATION TO THE USER FOR TEMPORARY ELECTRIC SERVICE. THIS SERVICE SHALL BE USED UNTIL THE NEW SERVICE IS ENERGIZED. THE CONTRACTOR SHALL FURNISH, INSTALL, AND PAY FOR ALL NECESSARY WIRE, METERING, POLES, SWITCHES, RECEPTACLES, LIGHTS, AND ACCESSORIES TO PROVIDE A TEMPORARY ELECTRIC SERVICE. THE CONTRACTORS ON THE PROJECT REQUIRING EXTENSION CORDS SHALL PROVIDE THEIR OWN CORDS AND PLUGS UP TO CAPACITY OF 20 AMPERES. THIS CONTRACTOR SHALL MAINTAIN THE TEMPORARY LIGHT AND POWER SYSTEM FOR THE DURATION OF THE WORK AND SHALL REMOVE IT FROM THE SITE WHEN DIRECTED. TEMPORARY WIRING AND EQUIPMENT SHALL REMAIN THE PROPERTY OF THIS CONTRACTOR. THE COMPLETE TEMPORARY SERVICE SHALL COMPLY WITH OSHA REQUIREMENTS.

PART 2 – PRODUCTS

2.1 MATERIAL APPROVAL

ALL MATERIALS MUST BE NEW AND BEAR U.L. LABEL. MATERIALS THAT ARE NOT COVERED BY UL TESTING STANDARDS SHALL BE TESTED AND APPROVED BY AN INDEPENDENT TESTING LABORATORY OF A GOVERNMENTAL AGENCY APPROVED BY THE AUTHORITY HAVING JURISDICTION.

2.2 WIRES AND CABLES

FOR 600V SYSTEMS AND BELOW SHALL BE STRANDED COPPER. THE MINIMUM WIRE SIZE SHALL BE #12 AWG. WIRE AMPACITY SHALL BE EQUAL TO OR GREATER THAN THE OVERCURRENT PROTECTIVE DEVICE SERVING THAT CIRCUIT. WIRE SIZE SHALL BE INCREASED TO COMPENSATE FOR VOLTAGE DROP BASED ON PHYSICAL ROUTING OF CABLE. INSULATION SHALL BE THWN FOR WET LOCATIONS AND THHN FOR DRY LOCATIONS.

MC CABLE MAY BE USED WHERE PERMITTED BY THE NATIONAL ELECTRICAL CODE. MC CABLE SHALL BE PROVIDED WITH A GROUNDING CONDUCTOR.

2.3 JUNCTION AND PULL BOXES

BOXES SHALL BE CODE GAUGE, CONSTRUCTED OF GALVANIZED STEEL WITH SCREWED COVERS. JUNCTION BOXES AND PULL BOXES SHALL BE SO LOCATED AS TO BE ACCESSIBLE. WHERE A NATURAL MEANS OF ACCESS IS NOT AVAILABLE, HINGED METAL ACCESS COVERS MATCHING THE CEILING FINISH SHALL BE PROVIDED BY THIS CONTRACTOR. ACCESS COVERS SHALL BE FLUSH TYPE WITH HINGED DOOR AND RIGID FRAME, WITH SCREWDRIVER LOCK. A REMOVABLE PAN OR LAY-IN CEILING SHALL BE CONSIDERED AS ADEQUATE MEANS OF ACCESS TO BOXES. ACCESS PANEL SHALL BE MILCOR "M" OR "DIV" OR APPROVED EQUAL.

2.4 OUTLET BOXES

CONDUIT BOXES SHALL BE CAST ALUMINUM, GALVANIZED OR CADMIUM PLATED STEEL AS MANUFACTURED BY STEEL CITY, APPLETON, CROUSE HINDS, RUSSELL & STOLL, OR RACO. FIXTURE OUTLET BOXES SHALL BE A STANDARD 4" X 2" DEEP, OCTAGONAL OR SQUARE WITH 3/8" FIXTURE STUDS. DEVICE OUTLET BOXES SHALL BE NOMINAL 2" X 4" WHERE TWO WIRES TERMINATE. WHERE WIRING IS CONTINUOUS AND MORE THAN TWO ENTER, BOXES SHALL BE 4" SQUARE. PROVIDE SINGLE GANG PLASTER RING EXTENSIONS FOR 4" SQUARE BOXES WHERE INSTALLED IN PLASTERED WALLS. DEVICE OUTLET BOXES LOCATED IN MASONRY WALLS SHALL BE 4" SQUARE AND HAVE SQUARE CORNERS WITH NO EXTERNAL EARS.

OUTLET AND DEVICE BOXES SHALL BE RIGIDLY ATTACHED TO THE CEILING OR WALL CONSTRUCTION BY MEANS OF STEEL STRAPS SECURED TO STUDS OR CHANNELS BY MEANS OF SCREWS, BOLTS, OR WIRE. BOXES SHALL BE ALIGNED TRUE TO BUILDING LINES. MOUNTING HEIGHTS AND DIMENSIONS SHALL BE CONSIDERED TO BE AT THE CENTER LINE OF THE BOX. OUTLET AND DEVICE BOXES SHALL NOT BE MOUNTED BACK TO BACK IN COMMON WALLS. WATER TIGHT JUNCTION BOXES, BONDING JUMPERS, ETC., SHALL BE PROVIDED WHEREVER THE CONSTRUCTION DICTATES SUCH DEVICES.

2.5 WIRING DEVICES

ALL WIRING DEVICES OF ANY ONE GENERAL TYPE SHALL BE OF THE SAME MANUFACTURER AND SHALL MATCH THROUGHOUT. WIRING DEVICES SHALL BE AS MANUFACTURED BY HUBBELL, GE, LEVITION, P & S, OR BRYANT. COVER PLATES SHALL BE AS MANUFACTURED BY ARROW HART, SIERRA, LEVITON, OR MULLBURRY. THE COLOR SHALL BE IVORY UNLESS SPECIFIED OTHER WISE BY ARCHITECT.

WHERE INDICATED, PROVIDE SPECIFICATION GRADE, DUPLEX RECEPTACLES, GROUND-FAULT CIRCUIT INTERRUPTERS; GROUND TYPE, UL-RATED CLASS A GROUP 1, 20 AMPERES RATING, 120 VOLTS. THE COLOR SHALL BE IVORY UNLESS SPECIFIED OTHERWISE BY ARCHITECT. SWITCHES SHALL BE FLUSH WALL TYPE. TWO, THREE AND FOUR-WAY 120-VOLT SWITCHES SHALL BE SPECIFICATION GRADE, TOGGLE HANDLE, WITH TOTALLY ENCLOSED CASE, RATED 20 AMPERE, TUNGSTEN, 60 HERTZ AND CONTAIN SWITCHING ARRANGEMENT INDICATED ON DRAWINGS. ALL LIGHT SWITCHES SHALL HAVE A COVER TO PREVENT INCIDENTAL CONTACT. THE COLOR SHALL BE IVORY UNLESS SPECIFIED OTHER WISE BY ARCHITECT.

2.6 WIRE CONNECTORS

CONNECTIONS SHALL BE MADE USING PRESSURE TYPE TERMINALS. WHERE CONNECTIONS OF STRANDED WIRE ARE TO BE MADE TO DEVICES OR EQUIPMENT UNDER SCREW HEADS ONLY, INSTALL INSULATED CRIMP TYPE SPADE CLIPS ON THE WIRE ENDS BEFORE THE CONNECTIONS ARE MADE. CONNECTORS SHALL CONTAIN ONLY ONE WIRE UNLESS THEY ARE APPROVED FOR MULTIPLE CONDUCTORS.

2.7 PANELBOARD

PANELBOARDS SHALL BE AS MANUFACTURED BY SQUARE D, GE, SIEMENS, OR CUTLER HAMMER. PROVIDE PANELBOARDS AS INDICATED ON SCHEDULES WITH THE FOLLOWING FEATURES:
HARD-DRAWN COPPER BUS, MECHANICAL-TYPE MAIN AND NEUTRAL LUGS, NEUTRAL BUS RATED 100 PERCENT OF PHASE BUS, GROUND BUS BONDED TO ENCLOSURE, BOLT-ON MOLDED-CASE THERMAL-MAGNETIC BREAKERS. PROVIDE A PHENOLIC NAMEPLATE ON THE VISIBLE FACE INDICATING THE PANEL NAME IN 3/8” LETTERS. PROVIDE A TYPE WRITTEN PANEL DIRECTORY THAT IS FULLY VISIBLE WHEN THE PANEL DOOR IS OPEN. THE PANEL DIRECTLY SHALL INDICATE THE LOADS SERVED BY ALL CIRCUIT BREAKERS INSTALLED IN THE PANELBOARD, THE SOURCE OF POWER TO THE PANELBOARD, THE SIZE OF THE PANEL BOARD, SIZE OF THE MAIN BREAKER IF INSTALLED, VOLTAGE, PHASE, AND NUMBER OF WIRES SERVING THE PANELBOARD.

2.8 WARNING SIGNS

PROVIDE WARNING SIGNS FOR FLASH PROTECTION IN ACCORDANCE WITH NFPA 70E AND NEMA Z535.4 FOR PANELBOARDS, CIRCUIT BREAKER ENCLOSURES, LOAD CENTERS, AND ANY OTHER ELECTRICAL EQUIPMENT THAT ARE LIKELY TO REQUIRE EXAMINATION, ADJUSTMENT, SERVICING, OR MAINTENANCE WHILE ENERGIZED. PROVIDE FIELD INSTALLED SIGNS TO WARN QUALIFIED PERSONS OF POTENTIAL ELECTRIC ARC FLASH HAZARDS WHEN WARNING SIGNS ARE NOT PROVIDED BY THE MANUFACTURER. PROVIDE MARKING THAT IS CLEARLY VISIBLE TO QUALIFIED PERSONS BEFORE EXAMINATION, ADJUSTMENT, SERVICING, OR MAINTENANCE OF THE EQUIPMENT.

2.9 RACEWAYS

ALL DISTRIBUTION AND SERVICE WIRING SHALL BE RUN IN CONDUIT, IN MASONRY WALLS, ON EXPOSED SURFACES, IN POURED CONCRETE, AND WHERE UNDERGROUND. CONDUIT MAY BE RIGID GALVANIZED OR PLATED STEEL, INTERMEDIATE GRADE STEEL (IMC), RIGID ALUMINUM, GALVANIZED, OR PLATED THINWALL ELECTRIC METALLIC TUBING OR TYPE EPC-40 RIGID POLYVINYL CHLORIDE (PVC), SUBJECT TO THE FOLLOWING CONDITIONS. CONDUIT SHALL CONFORM TO ANSI AND NEMA REQUIREMENTS AND EACH LENGTH SHALL BE UL LABELED. DO NOT USE ALUMINUM IN POURED CONCRETE OR UNDERGROUND, EMT IS NOT APPROVED FOR INSTALLATION UNDERGROUND OR EXPOSED TO WEATHER. EXPOSED CONDUITS IN EQUIPMENT ROOMS, STORAGE ROOMS, JANITOR ROOMS, AND SIMILAR SPACES MAY BE EMT, IMC, OR RIGID.

FLEXIBLE METAL CONDUIT EQUAL TO GREENFIELD MAY BE USED FOR CONNECTIONS TO LIGHTING FIXTURES, WITH LENGTH LIMITED TO 6 FT., HORIZONTAL RUNS THROUGH STUD WALLS, IN NARROW MOVABLE PARTITIONS WHERE OTHER RACEWAYS ARE NOT PRACTICABLE WHEN SO APPROVED BY THE OWNER OR ENGINEER, AND CONNECTIONS TO MOTORS OR CONTROLS ON DYNAMIC EQUIPMENT. NOTE THAT FLEXIBLE MOTOR CONNECTIONS IN WET, DAMP, DUSTY, OR OUTSIDE LOCATIONS SHALL BE WATER AND DUST TIGHT TYPE FITTINGS APPROVED FOR WET LOCATIONS.
CONDUIT SHALL BE 3/4" DIAMETER OR LARGER EXCEPT 1/2" SIZE MAY BE USED WHERE FLEXIBLE CONDUIT IS ALLOWED, FOR SWITCH LEGS, AND WHEN CONDUIT CARRIES CONTROL WIRING ONLY

2.10 LIGHT FIXTURES

PROVIDE LIGHT FIXTURES AS SHOWN IN LIGHTING FIXTURE SCHEDULE. PROVIDE LAMPS IN EACH FIXTURE. ONLY THE NUMBER OF LAMPS REQUIRED TO PROVIDE TEMPORARY LIGHTING SHALL BE INSTALLED AT THE TIME FIXTURES ARE INSTALLED AND TESTED. REMAINING LAMPS SHALL BE INSTALLED NOT MORE THAN TEN (10) DAYS PRIOR TO FINAL ACCEPTANCE OF THE PROJECT BY THE OWNER. LAMPS SHALL BE OPERATING AT THE TIME OF FINAL ACCEPTANCE AND DEFECTIVE LAMPS SHALL BE REPLACED BY THIS CONTRACTOR. LAMPS SHALL BE MANUFACTURED BY G.E., WESTINGHOUSE, OR SYLVANIA.

PART 3 – EXECUTION

3.1 GENERAL

ELECTRIC SYSTEM LAYOUTS INDICATED ON THE DRAWINGS ARE DIAGRAMMATIC, BUT SHALL BE FOLLOWED AS CLOSELY AS ACTUAL CONSTRUCTION AND WORK OF OTHER TRADES WILL ALLOW. COORDINATE LOCATIONS OF ELECTRICAL EQUIPMENT, DEVICES, OUTLETS, FIXTURES, ETC., WITH ARCHITECTURAL PLANS, ELEVATIONS, AND REFLECTED CEILING PLANS PRIOR TO ROUGH-IN WORK. ALL HOME RUNS ARE INDICATED AS STARTING FORM THE DEVICE NEAREST THE PANEL AND CONTINUING IN THE GENERAL DIRECTION OF THE PANEL. OBTAIN PRIOR APPROVAL FROM ARCHITECT AND CONFORM TO ALL STRUCTURAL REQUIREMENTS WHEN CUTTING OR BORING OF THE STRUCTURE OR STRUCTURAL MEMBERS IS REQUIRED. CONDUITS LEAVING OR ENTERING THE BUILDING SHALL BE SEALED PER THE NATIONAL ELECTRICAL CODE TO PREVENT THE ENTRANCE OF MOISTER.

3.2 ELECTRICAL GROUNDING

ENTIRE ELECTRICAL SYSTEM SHALL BE GROUNDED IN ACCORDANCE WITH NEC REQUIREMENTS. CONDUITS AND ASSOCIATED FITTINGS AND TERMINATIONS SHALL BE MADE MECHANICALLY TIGHT TO PROVIDE A CONTINUOUS ELECTRICAL PATH TO GROUND AND SHALL BE SAFELY GROUNDED AT ALL EQUIPMENT BY BONDING ALL METALLIC CONDUIT TO THE EQUIPMENT ENCLOSURES WITH LOCKNUTS CUTTING THROUGH PAIN ON ENCLOSURES. BOND ALL CONDUITS ENTERING SERVICE ENTRANCE SWITCHBOARD WITH A GROUND WIRE CONNECTING THE GROUNDING TYPE BUSHINGS TO THE EQUIPMENT GROUND BAR. GROUND CONDUCTORS SHALL IDENTIFIED BY GREEN INSULATION OR BY PAINTING GREEN AT ALL ACCESSIBLE LOCATIONS AND SHALL BE CONNECTED WITH APPROVED CONNECTORS AND TERMINATORS TO BOXES, DEVICES, EQUIPMENT, ETC., AND TO GROUND BARS IN PANELS. THE BUILDING NEUTRAL SHALL BE IDENTIFIED THROUGHOUT WITH WHITE CONDUCTORS.

3.3 RACEWAY AND CABLE INSTALLATION

CONDUIT SHALL BE RUN CONCEALED UNLESS OTHERWISE INDICATED OR SPECIAL PERMISSION GRANTED FROM THE OWNER. WHERE CONDUIT IS EXPOSED, IT SHALL BE RUN PARALLEL OR PERPENDICULAR TO THE BUILDING LINES. BENDS AND OFFSETS SHALL BE AVOIDED WHERE POSSIBLE. WHEN REQUIRED, RADII FOR CONDUITS SHALL NOT BE LESS THAN STIPULATED BY CODE. TERMINATIONS OF ALL CONDUITS SHALL BE SECURED BY LOCKNUTS AND APPROVED BUSHINGS TIGHTENED UP TO SECURE ELECTRICAL AS WELL AS MECHANICAL INTEGRITY OF THE CONDUIT NETWORK. FASTEN CONDUIT SECURELY TO THE BUILDING STRUCTURE THROUGHOUT BY MEANS OF HEAVY DUTY STRAP HANGERS AND CLAMPS ATTACHED TO THE BASIC BUILDING STRUCTURE. SMALLER BRANCH CIRCUIT CONDUIT MAY BE SECURED BY MEANS OF GALVANIZED METAL CLAMPS AND SCREWS ATTACHED TO CONCRETE OR JOISTS. WIRE SHALL NOT BE USED FOR SUSPENDING CONDUIT. VERTICAL CONDUIT RUN SHALL BE SUPPORTED WITH CLAMPS AT EACH FLOOR LEVEL TO PREVENT BOTH LATERAL AND VERTICAL SHIFTING.

OPEN ENDS OF CONDUIT STUBS SHALL BE CAPPED OR PLUGGED IMMEDIATELY AFTER INSTALLATION AND SPECIAL CARE SHALL BE TAKEN TO PREVENT DAMAGE TO THE CONDUIT DURING CONCRETE POURING. EMPTY CONDUIT INSTALLATION FOR USE BY OTHERS SUCH AS TELEPHONE OR FUTURE SYSTEMS, ETC., SHALL BE COMPLETE WITH PULL WIRE. A MANDREL SHALL BE PULLED THROUGH EACH FEEDER CONDUIT TO ASSURE AGAINST FOREIGN OBJECTS REMAINING INSIDE. FLOOR SLEEVES SHALL PROJECT ONE INCH ABOVE THE FINISHED FLOOR. SLEEVES AND OPENINGS THROUGH FLOORS AND WALLS IN WHICH CONDUITS PASS SHALL BE PACKED AND SEALED WITH FIRE STOPPING MATERIAL TO PREVENT SPREAD OF FIRE AND SMOKE.

3.4 MISCELLANEOUS EQUIPMENT CONNECTIONS

VARIOUS ITEMS OF EQUIPMENT WILL BE FURNISHED AND SET IN PLACE BY OTHER TRADES. THE CONTRACTOR SHALL PROVIDE ALL MATERIALS AND LABOR TO COMPLETE THE FIELD WIRING OF THIS EQUIPMENT SO THAT IT SHALL BE CONNECTED COMPLETE AND READY FOR OPERATION. WHERE DISCONNECT SWITCHES ARE INDICATED OR WHERE OTHERWISE REQUIRED, THEY SHALL BE MOUNTED IN AN ACCESSIBLE LOCATION AS DEFINED BY THE NATIONAL ELECTRICAL CODE. IT WILL BE THE RESPONSIBILITY OF THIS CONTRACTOR TO VERIFY THAT THE RECEPTACLE SPECIFIED ON THE DRAWINGS WILL MATCH THE CONFIGURATION OF THE PLUG BEING FURNISHED ON THE APPLIANCE PRIOR TO INSTALLATION.

3.5 MOTOR WIRING

MOTORS FOR PUMPS, FANS, AIR CONDITIONING UNITS, ETC. WILL BE FURNISHED AND PLACED BY VARIOUS TRADES. MOTOR STARTERS SHALL BE FURNISHED BY THIS CONTRACTOR IF NOT PROVIDED BY OTHER TRADES AND IS REQUIRED FOR THE EQUIPMENT TO BE FULLY OPERATIONAL. STARTERS, WHERE FURNISHED BY OTHER TRADES, WILL BE TURNED OVER TO THIS CONTRACTOR WHO SHALL INSTALL THEM WHERE INDICATED, INCLUDING ALL WIRING FROM THE STARTERS TO THE MOTORS, ALL COMPLETE AND READY FOR OPERATION. WHERE DISCONNECT SWITCHES ARE INDICATED, OR REQUIRED BY THE CODE IN ADDITION TO THE STARTERS, THEY SHALL BE FURNISHED AND INSTALLED BY THIS CONTRACTOR. FLEXIBLE CONDUIT SHALL BE USED AT ALL MOTOR CONNECTIONS. WHERE EXPOSED TO WEATHER, MOISTURE OR TO CONCENTRATE DUST OR FUMES, FLEXIBLE CONDUIT AND CONNECTORS SHALL BE WATERTIGHT.

3.6 EQUIPMENT SUPPORTS

PROVIDE STRUCTURAL STEEL FRAMEWORK AND HANGING RODS WITH BRACES AND ACCESSORIES WHERE SHOWN OR WHERE REQUIRED TO HOLD EQUIPMENT IN FINAL POSITION. PROVIDE STEEL STRAPS AND FRAMES TO SUPPORT WALL MOUNTED EQUIPMENT WHERE THE NORMAL WALL STRENGTH MAY BE INADEQUATE. ELECTRICAL DEVICES, MOTORS STARTERS, DISCONNECT SWITCHES, ETC. SHALL BE SUPPORTED INDEPENDENT OF AND ISOLATED FROM EQUIPMENT VIBRATION.

3.7 DEMOLITION AND EXTENSION OF EXISTING ELECTRICAL WORK

REMOVE EXPOSED ABANDONED CONDUIT AND JUNCTION BOXES, INCLUDING ABANDONED CONDUIT ABOVE ACCESSIBLE CEILING FINISHES FULL LENGTH FROM SOURCE TO DEVICE. CUT EMBEDDED OR CONCEALED CONDUIT FLUSH WITH WALLS AND FLOORS, AND PATCH SURFACES. DISCONNECT ABANDONED OUTLETS AND REMOVE DEVICES. REMOVE ABANDONED OUTLETS IF CONDUIT SERVICING THEM IS ABANDONED AND REMOVE. PROVIDE BLANK COVER FOR ABANDONED OUTLETS THAT ARE NOT REMOVED. DISCONNECT AND REMOVE ABANDONED PANELBOARDS AND DISTRIBUTION EQUIPMENT. DISCONNECT AND REMOVE ELECTRICAL DEVICES AND EQUIPMENT SERVING UTILIZATION EQUIPMENT THAT HAS BEEN REMOVED. DISCONNECT AND REMOVE ABANDONED LUMINAIRES. REMOVE BRACKETS, STEMS, HANGERS, AND OTHER ACCESSORIES.

REPAIR ADJACENT CONSTRUCTION AND FINISHES DAMAGED DURING DEMOLITION AND EXTENSION WORK. MAINTAIN ACCESS TO EXISTING ELECTRICAL INSTALLATIONS THAT REMAIN ACTIVE. MODIFY INSTALLATION OR PROVIDE ACCESS PANEL AS APPROPRIATE. EXTEND EXISTING INSTALLATIONS USING MATERIALS AND METHODS COMPATIBLE WITH EXISTING ELECTRICAL INSTALLATION OR AS SPECIFIED.

THE LEVEL OF COMPLETION SHALL BE DEMONSTRATED AND APPROVED BY OWNER/ARCHITECT. REVIEW WITH THE OWNER MATERIALS THAT HAVE BEEN REMOVED AND ARE NO LONGER REQUIRED, TO DETERMINE ANY WHICH THE OWNER MAY DESIRE TO KEEP. DELIVER THOSE MATERIALS THAT THE OWNER DESIRES TO RETAIN TO THE OWNER’S SPECIFIED LOCATION. FOR THOSE MATERIALS NOT REQUIRED BY THE OWNER, DISPOSE OF THEM IN ACCORDANCE WITH APPLICABLE REGULATIONS.

3.8 RECORD DRAWINGS

THIS CONTRACTOR SHALL KEEP AN ACCURATE RECORD OF ANY DEVIATIONS OF CONSEQUENCE FROM THE CONTRACT DRAWINGS AND SPECIFICATIONS. HE SHALL NEATLY AND CORRECTLY ENTER, IN COLORED PENCIL, ANY DEVIATIONS ON DRAWINGS AFFECTED AND SHALL KEEP THESE DRAWINGS AVAILABLE FOR INSPECTION. AT COMPLETION OF THE JOB, AND BEFORE FINAL APPROVAL, THE CORRECTED SET OF DRAWINGS SHALL BE DELIVERED TO THE OWNER.

3.9 TESTS AND MAINTENANCE INSTRUCTIONS

FINAL INSPECTION AND OPERATIONAL TESTS OF ALL EQUIPMENT AND SYSTEMS SHALL BE MADE IN THE PRESENCE OF THE OWNER OR HIS AUTHORIZED REPRESENTATIVE. TESTS SHALL BE MADE UNDER CONDITIONS SIMULATING AS NEARLY AS PRACTICABLE THOSE WHICH ARE OBTAINED IN OPERATION, AND SHALL SHOW CONCLUSIVELY THAT THE REQUIREMENTS OF THE SPECIFICATIONS HAVE BEEN FULFILLED. THIS CONTRACTOR SHALL MEGGER TEST FEEDERS OR BRANCH CIRCUITS AS REQUIRED OR DESIRED BY THE OWNER. DATA TAKEN DURING SUCH TESTS SHALL BE SUBMITTED TO THE OWNER, TYPEWRITTEN, AND IN FOLDER FORM. INSTRUMENTS REQUIRED FOR TESTS SHALL BE FURNISHED BY THIS CONTRACTOR. SPECIAL SYSTEMS SHALL BE CHECKED OUT AND DETERMINED TO BE COMPLETE AND FUNCTIONING IN A MANNER AS REQUIRED BY THE SPECIFICATIONS AND DRAWINGS.

REV.	DATE	INITIAL

ELECTRICAL SPECIFICATIONS
GYMNASIUM/FELLOWSHIP HALL ADDITION FOR UHCPC
3126 NEVEL DR. HUNTSVILLE, AL. 35810

DRAWN: C. RAMSEY
REVIEWED: C. RAMSEY
256-684-9445
DATE: 31 JULY 2017
SCALE: NONE

No. 27309
7/31/2017
ARLIE CLARK RAMSEY, JR.

E-1
SHEET 1 OF 6

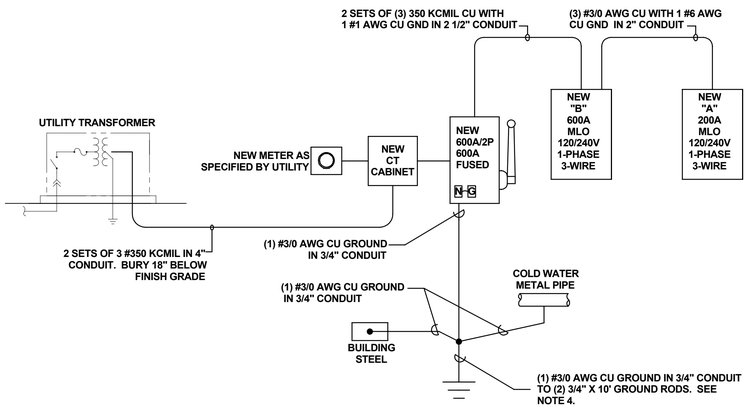

RISER DIAGRAM

NOT TO SCALE

POWER RISER DIAGRAM NOTES:

1. METER BASE SPECIFIED BY UTILITY COMPANY AND INSTALLED BY CONTRACTOR. GROUND METER BASE IN ACCORDANCE WITH UTILITY COMPANY REQUIREMENTS. CONTRACTOR SHALL PROVIDE ALL COMPONENTS REQUIRED BY THE UTILITY COMPANY.
2. ARRANGE WITH THE LOCAL UTILITY COMPANY FOR A 600 AMP, 120/240 VOLT, SINGLE PHASE, THREE WIRE ELECTRICAL SERVICE TO BE BROUGHT TO THE BUILDING, AND COORDINATE COMPLETE REQUIREMENTS FOR CONNECTION TO UTILITY POWER PRIOR TO PURCHASE FABRICATIONS AND INSTALLATION OF SERVICE EQUIPMENT AND WIRING. VERIFY WITH UTILITY COMPANY THAT LOCATIONS, ARRANGEMENT, UTILITY COMPANY VOLTAGE, PHASE, METERING REQUIRED, AND CONNECTIONS TO UTILITY SERVICE ARE IN ACCORDANCE WITH THEIR REGULATIONS AND REQUIREMENTS. IF THEIR REQUIREMENTS ARE AT A VARIANCE WITH THESE DRAWINGS, CONTRACTOR SHALL INCLUDE ALL COSTS NECESSARY TO MEET THE UTILITY REQUIREMENTS WITHOUT EXTRA COST TO THE OWNER AFTER BIDS ARE ACCEPTED.
3. PROVIDE AND INSTALL CT ENCLOSURE AND NEW METER AS SPECIFIED BY THE UTILITY COMPANY. METER SHALL BE PROVIDED BY UTILITY COMPANY AND INSTALLED BY CONTRACTOR.
4. PROVIDE TWO (2) 3/4" X 10' GROUND RODS 20 FT APART. BOND EACH GROUND ROD TOGETHER WITH #3/0 AWG CU. ALL BELOW GRADE GROUND CONNECTIONS TO BE BY EXOTHERMIC WELD.

FIXTURE SCHEDULE

FIXTURE DESIGNATION	FIXTURE	LAMP			VOLTAGE	MOUNTING	REMARKS
	TYPE OR EQUIV	TYPE	NO.	DESCRIPTION			
A	EATON - METALUX 24GR-LD4-48-F1-UNV-L840-CD1-U	LED	_	4800 LM / 85 CRI / 4000K	120V	RECESSED	RECESSED LENSED TROFFER, LED TYPE
B	EATON - METALUX 24GR-LD4-38-F1-UNV-L840-CD1-U	LED	_	3800 LM / 85 CRI / 4000K	120V	RECESSED	RECESSED LENSED TROFFER, LED TYPE
D	LITHONIA IBZ 6 32	FL	6	F32T8/2900 LM	120V	SURFACE	HIGH BAY FLOURESCENT
EM	LITHONIA ELM2 LED	LED	2	1.5W WHITE LED	120V	WALL 7'-6"	TWO LAMP HEAD LED EMERGENCY LIGHTING UNIT
EX	LITHONIA LHQM LED R	LED	2	1.5W WHITE LED	120V	WALL 7'-6"	EXIT SIGN / TWO LAMP HEAD LED EMERGENCY LIGHTING COMBINATION UNIT
EX1	LITHONIA LQM S W 1 R 120	LED	1	LED	120V	WALL 7'-6"	SINGLE FACE EXIT SIGN, SUPPLIED WITH EMERGENCY BATTERY
T3	EATON - LUMARK PRVS-A40-UNV-T3	LED	1	15205LM / 4000K / 70 CRI TYPE III OPTICS	120V	POLE 27'-0" 25' POLE 2' CONCRETE BASE	PREVAIL AREA AND ROADWAY LUMINAIRE (2) 70 CRI, 4000K LEDS AND TYPE III OPTICS, BRONZE PAINTED FINISH
T4	EATON - LUMARK PRVS-A40-UNV-T4	LED	1	15159 LM / 4000K / 70 CRI TYPE IV OPTICS	120V	POLE 27'-0" 25' POLE 2' CONCRETE BASE	PREVAIL AREA AND ROADWAY LUMINAIRE (2) 70 CRI, 4000K LEDS AND TYPE IV OPTICS, BRONZE PAINTED FINISH
T5	EATON - LUMARK PRVS-A40-UNV-T5	LED	1	15700 LM / 4000K / 70 CRI TYPE V OPTICS	120V	POLE 27'-0" 25' POLE 2' CONCRETE BASE	PREVAIL AREA AND ROADWAY LUMINAIRE (2) 70 CRI, 4000K LEDS AND TYPE V OPTICS, BRONZE PAINTED FINISH
P	LITHONIA OLCFM 15 DBB	LED	1	1077LM / 4000K / 16.6 WATTS	120V	SURFACE	GENERAL PURPOSE LED CAST FLUSH MOUNT WITH DARK BRONZE FINISH
W	LITHONIA TWP LED 10C 700 40K T3M MVOLT	LED	1	2183 LM / 4000K / 26 WATTS	120V	WALL 7'-0"	LED WALL PACK WITH 10 LEDS, @700MA, 4000K, AND TYPE 3 MEDIUM OPTICS
WD	EATON - ALL-PRO FE0650LPC2	LED	1	760LM / 4700K / 11.3 WATTS	120V	WALL 6'-0"	LED WHITE JELLY JAR WALL SCONCE WITH A ONE PERCENT DIFFUSE LONG LENS
X	LITHONIA AFN W EXT	XENON	2	6 WATT XENON	120V	WALL	ARCHITECTURAL EMERGENCY LIGHTING UNIT

HVAC & PLUMBING EQUIPMENT ELECTRICAL SCHEDULE

EQUIPMENT MARK	EQUIPMENT NAME	VOLTAGE	PHASE	EQUIPMENT DISCONNECT	CONDUCTORS NUMBER/SIZE	EQUIPMENT GROUND	CONDUIT SIZE
PKG-1A	PACKAGE UNIT	230	1	100/2/NF/3R	3 / #2	8	1 1/4
PKG-1B	PACKAGE UNIT	230	1	100/2/NF/3R	3 / #2	8	1 1/4
PKG-1C	PACKAGE UNIT	230	1	100/2/NF/3R	3 / #2	8	1 1/4
PKG-1D	PACKAGE UNIT	230	1	100/2/NF/3R	3 / #2	8	1 1/4
PKG-2	PACKAGE UNIT	230	1	100/2/NF/3R	3 / #2	8	1 1/4
FU-1	FURNACE UNIT	120	1	30/1/NF/3R	2 / #12	12	3/4
FU-2	FURNACE UNIT	120	1	30/1/NF/3R	2 / #12	12	3/4
C-1	CONDENSING UNIT	230	1	60/2/NF/3R	3 / #8	10	3/4
C-2	CONDENSING UNIT	230	1	60/2/NF/3R	3 / #8	10	3/4

* CB = CIRCUIT BREAKER SERVES AS DISCONNECT; REC = PLUG AND RECEPTACLE SERVE AS DISCONNECT SWITCH

DISCONNECT SWITCH NOMENCLATURE A /B / C / D; WHERE A = SIZE IN AMPS, B = NUMBER OF POLES, C = FUSED (F) OR NON-FUSED (NF), D = NEMA RATING

HVAC & PLUMBING ELECTRICAL SCHEDULE IS BASED ON THE UNITS PROVIDED IN THE MECHANICAL DRAWINGS. CONTRACTOR SHALL VERIFY THE UNITS PURCHASED BY THE MECHANICAL CONTRACTOR MATCH THESE PLANS. IF DIFFERENT UNITS ARE PURCHASED, THE CONTRACTOR SHALL PROVIDE OVERCURRENT PROTECTION AND BRANCH CIRCUITS PER MANUFACTURER'S INSTALLATION INSTRUCTIONS AND NEC.

PANELBOARD **A** LOCATION: **JAN RM 108** MAIN: **200 A** VOLTAGE: **120/240 VOLTS**
SUPPLIED FROM: **UTILITY** FEED: **TOP** MAIN CKT BKR: **MLO** PHASE: **1**
MOUNTED: **SURFACE** ASYM A.I.C MIN.: **22 K** WIRE: **3**

LOAD SERVED	NO. POLES	TRIP AMPS	WIRE SIZE	VA/ PHASE A	VA/ PHASE B	CKT NO.	CKT NO.	VA/ PHASE A	VA/ PHASE B	WIRE SIZE	TRIP AMPS	NO. POLES	LOAD SERVED
L-105-108,110,112	1	20	12	1812		1	2	1351		12	20	1	L-101-103,112-116
L-111	1	20	12		1077	3	4		1154	12	20	1	L-111
L-109,111, DRIVE THRU	1	20	12	1491		5	6	540		12	20	1	R-116
R-116	1	20	12		540	7	8		1440	12	20	1	R-111,114,115
R-103,111,114	1	20	12	1440		9	10	900		12	20	1	R-102,104,111,113
R-105,112,113,EXT	1	20	12		1260	11	12		1260	12	20	1	R-105,106
R-106,107,108	1	20	12	1440		13	14	1260		12	20	1	R-105,111,112
R-111 WARMER	1	20	12		1440	15	16		1440	12	20	1	R-111 WARMER
R-111	1	20	12	1080		17	18	360		12	20	1	R-109
R-109 WARMER	1	20	12		900	19	20		600	12	20	1	R-REFRIGERATOR
R-FREEZER	1	20	12	400		21	22	600		12	20	1	R-REFRIGERATOR
R-109 MICROWAVE	1	20	12		900	23	24		540	12	20	1	R-109
R-109	1	20	12	720		25	26	360		12	20	1	R-109 ISLAND
R-101,102,EXT	1	20	12		720	27	28		360	12	20	1	R-109
R-EXT	1	20	12	540		29	30	600		12	20	1	WATER HEATER
WATER FOUNTAIN	1	20	12		552	31	32		256	12	20	1	WALL PACKS
PARKING LOT LIGHTS	1	20	10	1144		33	34	100		12	20	1	RECIRC. PUMP
GAS RANGE	1	20	12		100	35	36		600	12	20	1	SNACK MACHINE
DRINK MACHINE	1	20	12	600		37	38	600		12	20	1	ICE MACHINE
SPARE	1	20				39	40		168	12	20	1	KITCHEN HOOD
SPARE	1	20				41	42				20	1	SPARE
				10667	7489			6671	7818				

C

ABBREVIATIONS:
R-RECEPTACLE, L-LIGHTS

TOTAL VA PHASE A: 17,337
TOTAL VA PHASE B: 15,307

* PROVIDE CIRCUIT BREAKER WITH THE CAPABILITY OF BEING LOCKED IN THE OPEN POSITION

TOTAL CONNECTED: 32,644

** PROVIDE HEATING, AIR CONDITIONING, REFRIGERATION TYPE CIRCUIT BREAKERS FOR HVAC UNITS

PANELBOARD **B** LOCATION: **JAN RM 108** MAIN: **600 A** VOLTAGE: **120/240 VOLTS**
SUPPLIED FROM: **UTILITY** FEED: **TOP** MAIN CKT BKR: **MLO** PHASE: **1**
MOUNTED: **SURFACE** ASYM A.I.C MIN.: **22 K** WIRE: **3**

LOAD SERVED	NO. POLES	TRIP AMPS	WIRE SIZE	VA/ PHASE A	VA/ PHASE B	CKT NO.	CKT NO.	VA/ PHASE A	VA/ PHASE B	WIRE SIZE	TRIP AMPS	NO. POLES	LOAD SERVED
** CU-1	2	30	10	1824		1	2	2496		6	45	2	CU-2 **
					1824	3	4		2496				
** CU-3	2	45	6	2496		5	6	2496		6	45	2	CU-4 **
					2496	7	8		2496				
** CU-5	2	45	6	2496		9	10	2496		6	45	2	CU-6 **
					2496	11	12		2496				
** CU-7	2	45	6	2496		13	14	2496		6	45	2	CU-8 **
					2496	15	16		2496				
PANEL A	2	200	3/0	17337		17	18	2496		6	45	2	CU-10 **
					15307	19	20		2496				
** CU-9	2	45	6	2496		21	22	2208		8	40	2	CU-12 **
					2496	23	24		2208				
** CU-11	2	45	6	2496		25	26	863		12	15	1	F/C-1 **
					2496	27	28		1187	12	20	1	F/C-2 (1) **
** F/C-3 (1)	1	20	12	1187		29	30	1187		12	20	1	F/C-2 (2) **
** F/C-3 (2)	1	20	12		1187	31	32		1187	12	20	1	F/C-4 (1) **
** F/C-5 (1)	1	20	12	1187		33	34	1187		12	20	1	F/C-4 (2) **
** F/C-5 (2)	1	20	12		1187	35	36		1187	12	20	1	F/C-6 (1) **
** F/C-7	1	15	12	863		37	38	1187		12	20	1	F/C-6 (2) **
SPARE	1	20				39	40				20	1	SPARE
SPARE	1	20				41	42				20	1	SPARE
				34878	31985			19112	18249				

C

ABBREVIATIONS:
R-RECEPTACLE, L-LIGHTS

TOTAL VA PHASE A: 53,989
TOTAL VA PHASE B: 50,234

* PROVIDE CIRCUIT BREAKER WITH THE CAPABILITY OF BEING LOCKED IN THE OPEN POSITION

TOTAL CONNECTED: 104,223

** PROVIDE HEATING, AIR CONDITIONING, REFRIGERATION TYPE CIRCUIT BREAKERS FOR HVAC UNITS

REV.	DATE	INITIAL
C	22 JAN 18	ACR
B	3 OCT 17	ACR
A	13 SEP 17	ACR

RISER DIAGRAM AND ELECTRICAL SCHEDULES

GYMNASIUM/FELLOWSHIP HALL ADDITION FOR UHCPC

3126 NEVEL DR. HUNTSVILLE, AL. 35810

DESIGN: C. RAMSEY
REVIEWED: C. RAMSEY 256-684-9445
DATE: 31 JULY 2017
SCALE: NONE

ALABAMA REGISTERED PROFESSIONAL ENGINEER No. 27309 7/31/2017 CHARLIE CLARK RAMSEY, JR.

E-2

SHEET 2 OF 6

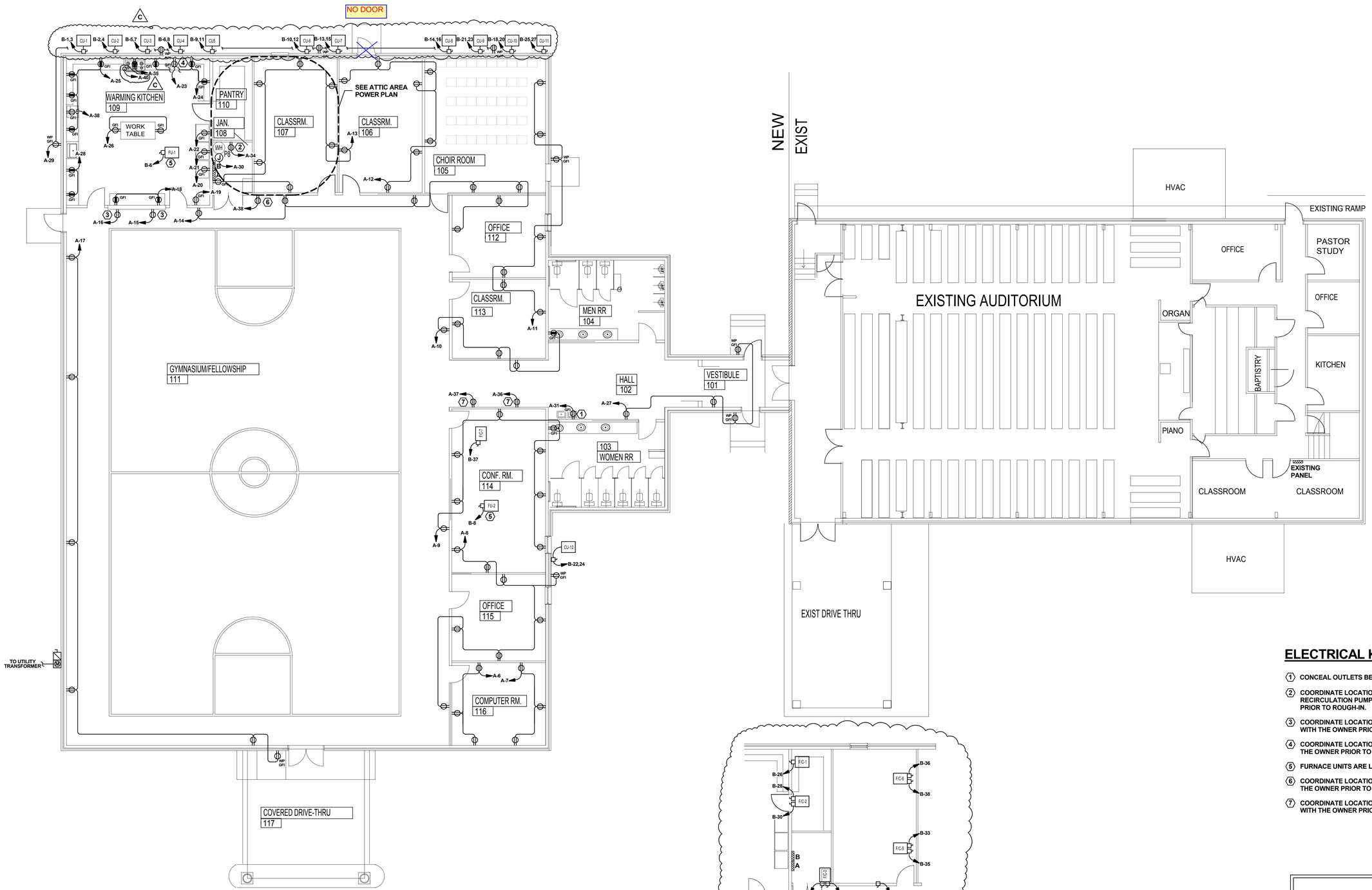

POWER PLAN
1/8" = 1' - 0"

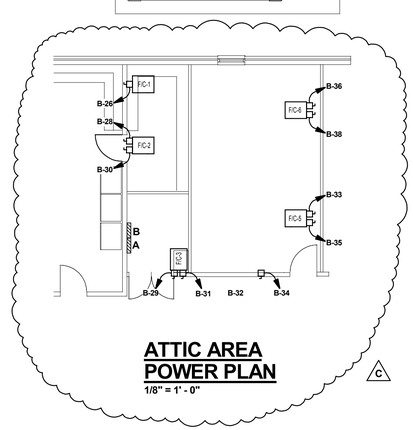

ATTIC AREA POWER PLAN
1/8" = 1' - 0"

ELECTRICAL KEYED NOTES

1. CONCEAL OUTLETS BEHIND WATER COOLER.
2. COORDINATE LOCATION OF RECEPTACLE FOR HOT WATER RECIRCULATION PUMP WITH THE MECHANICAL CONTRACTOR PRIOR TO ROUGH-IN.
3. COORDINATE LOCATION OF RECEPTACLE FOR THE FOOD WARMERS WITH THE OWNER PRIOR TO ROUGH-IN.
4. COORDINATE LOCATION OF RECEPTACLE FOR THE MICROWAVE WITH THE OWNER PRIOR TO ROUGH-IN.
5. FURNACE UNITS ARE LOCATED IN THE ATTIC SPACE.
6. COORDINATE LOCATION OF RECEPTACLE FOR THE ICE MAKER WITH THE OWNER PRIOR TO ROUGH-IN.
7. COORDINATE LOCATION OF RECEPTACLE FOR THE VENDING MACHINES WITH THE OWNER PRIOR TO ROUGH-IN.

REV.	DATE	INITIAL
C	22 JAN 18	ACR
B	3 OCT 17	ACR
A	13 SEP 17	ACR

POWER PLAN

GYMNASIUM/FELLOWSHIP HALL ADDITION FOR UHCPC

3126 NEVEL DR. HUNTSVILLE, AL. 35810

DESIGN: J. HALEY
REVIEWED: C. RAMSEY 256-684-9445
DATE: 31 JULY 2017
SCALE: 1/8" = 1' - 0"

ALABAMA REGISTERED PROFESSIONAL ENGINEER No. 27309 7/31/2017 CHARLIE CLARK RAMSEY, JR.

E-3

SHEET 3 OF 6

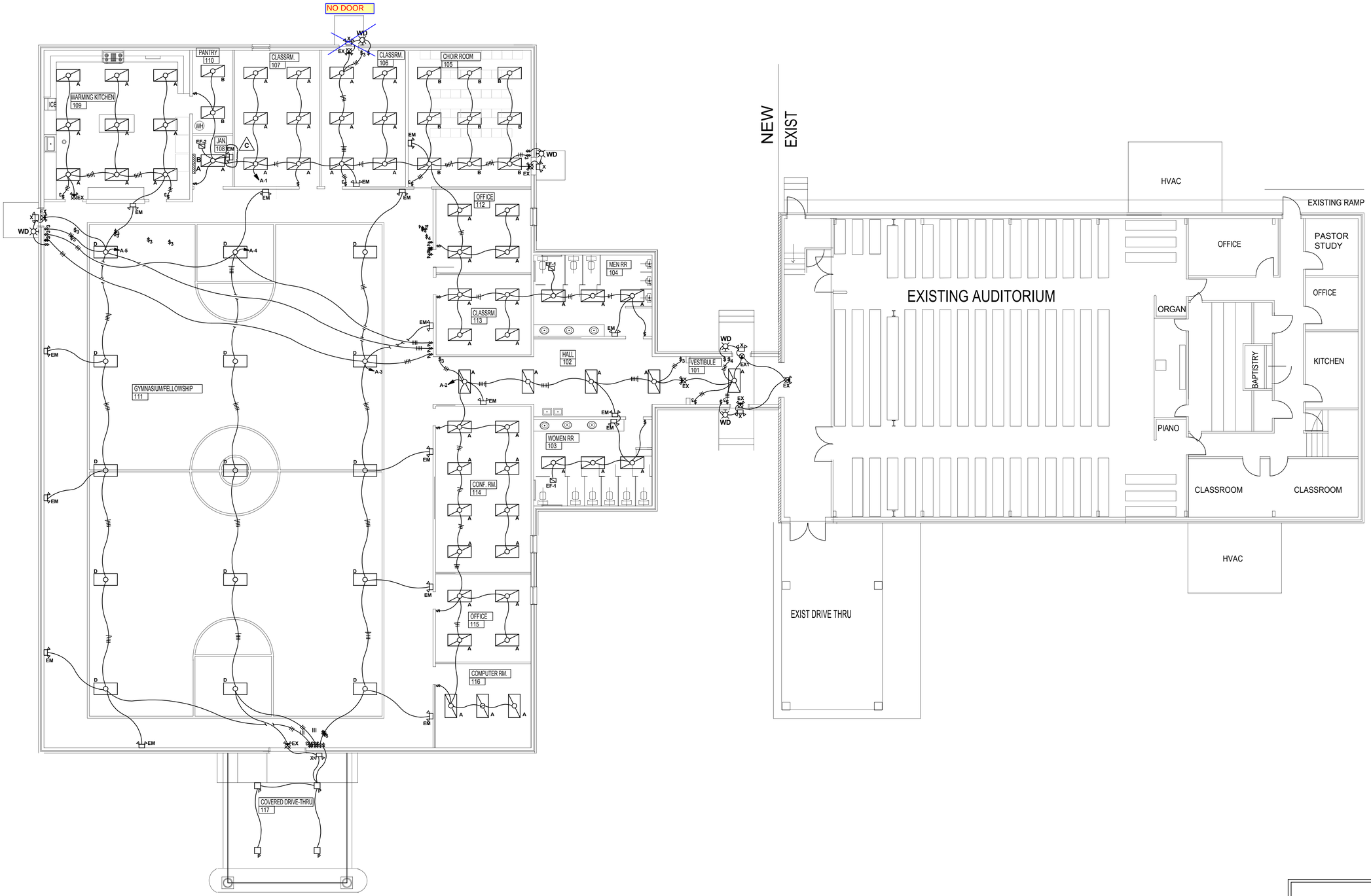

LIGHTING PLAN

1/8" = 1' - 0"

REV.	DATE	INITIAL
C	22 JAN 18	ACR

LIGHTING PLAN

GYMNASIUM/FELLOWSHIP HALL ADDITION FOR UHCPC

3126 NEVEL DR. HUNTSVILLE, AL. 35810

DESIGN: J. HALEY

REVIEWED: C. RAMSEY 256-684-9445

DATE: 31 JULY 2017

SCALE: 1/8" = 1' - 0"

ALABAMA REGISTERED PROFESSIONAL ENGINEER No. 27309 7/31/2017 CHARLIE CLARK RAMSEY, JR.

E-4

SHEET 4 OF 6

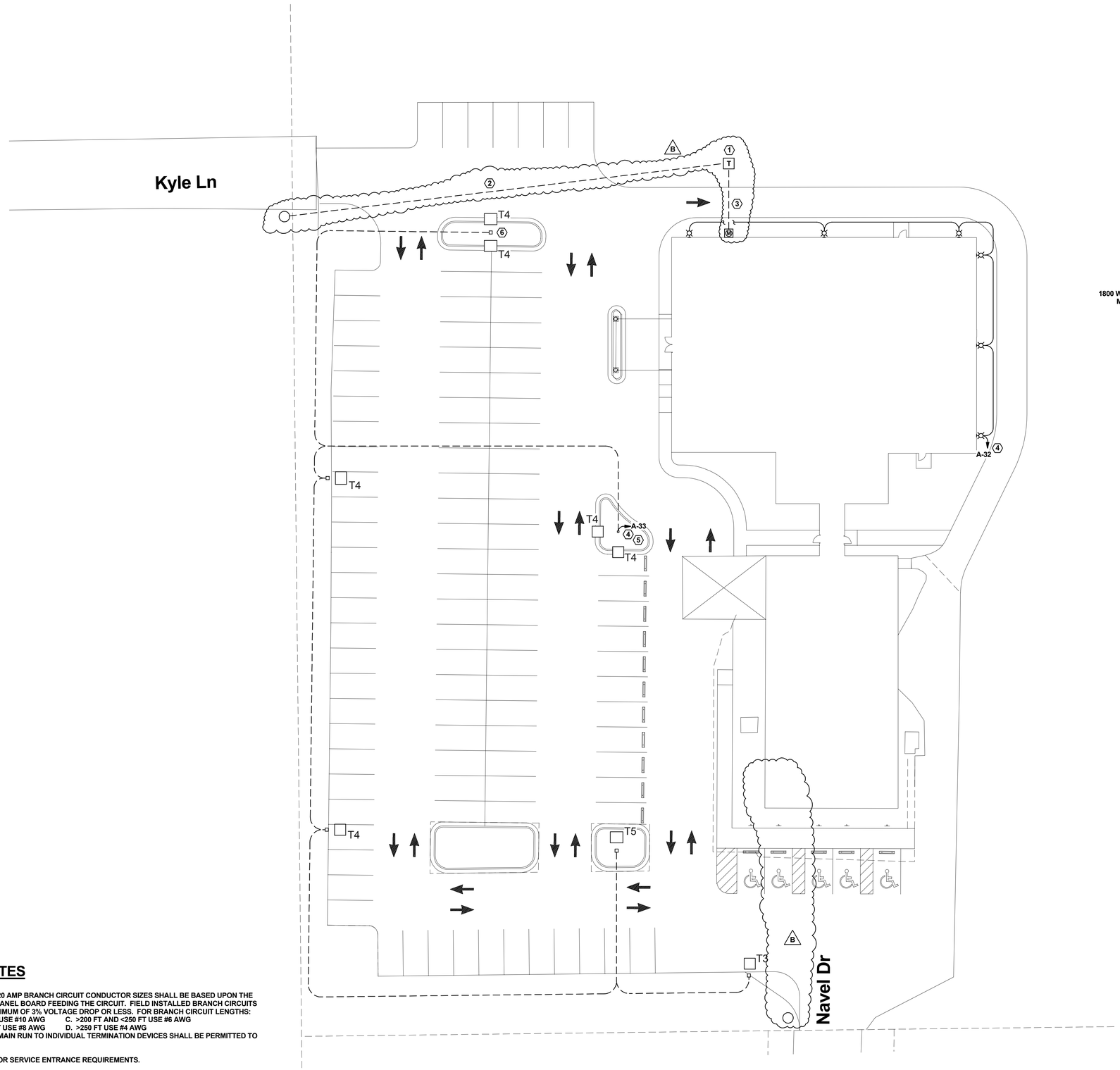

ELECTRICAL SITE PLAN
SCALE; 1" = 20' - 0"

ELECTRICAL SHEET KEYED NOTES

1. NEW UTILITY TRANSFORMER LOCATION.
2. NEW UTILTY FEEDER TO NEW TRANSFORMER LOCATION.
3. NEW UNDERGROUND SERVICE.
4. HOME RUN BRANCH CIRCUIT THROUGH LIGHTING CONTACTOR. SEE EXTERIOR LIGHTING CONTROL DIAGRAM FOR MORE INFORMATION.
5. ARM MOUNT: 2 AT 90 DEGREES.
6. ARM MOUNT: 2 AT 180 DEGREES.

B

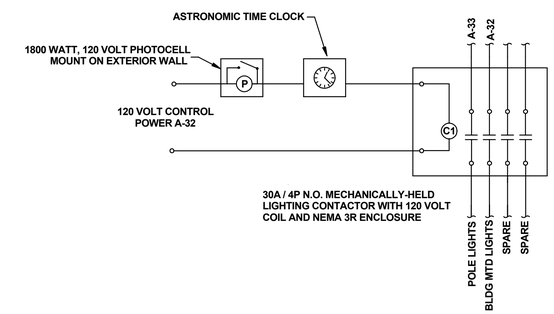

EXTERIOR LIGHTING CONTROL DIAGRAM
NOT TO SCALE

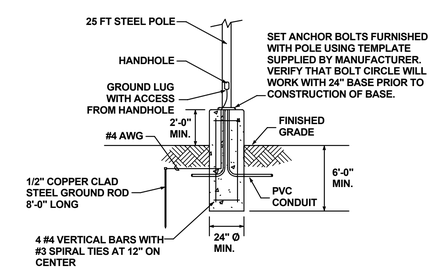

NOTE: AREA POLE LIGHT HEIGHT IS 27'-0".
25 FT POLE AND 2 FT CONCRETE BASE.

AREA LIGHT POLE BASE DETAIL
NOT TO SCALE

GENERAL NOTES

1. VOLTAGE DROP. FOR 20 AMP BRANCH CIRCUIT CONDUCTOR SIZES SHALL BE BASED UPON THE DISTANCE FROM THE PANEL BOARD FEEDING THE CIRCUIT. FIELD INSTALLED BRANCH CIRCUITS SHALL MAINTAIN A MINIMUM OF 3% VOLTAGE DROP OR LESS. FOR BRANCH CIRCUIT LENGTHS:
   A. >75 FT AND <125 FT USE #10 AWG C. >200 FT AND <250 FT USE #6 AWG
   B. >125 FT AND <200 FT USE #8 AWG D. >250 FT USE #4 AWG
   SHORT TAPS OFF THE MAIN RUN TO INDIVIDUAL TERMINATION DEVICES SHALL BE PERMITTED TO BE #12 AWG.
2. SEE RISER DIAGRAM FOR SERVICE ENTRANCE REQUIREMENTS.

REV.	DATE	INITIAL
B	3 OCT 17	ACR

ELECTRICAL SITE PLAN

GYMNASIUM/FELLOWSHIP HALL ADDITION FOR UHCPC

3126 NEVEL DR. HUNTSVILLE, AL. 35810

DESIGN: C. RAMSEY
REVIEWED: C. RAMSEY 256-684-9445
DATE: 31 JULY 2017
SCALE: 1" = 20' - 0"

ALABAMA REGISTERED PROFESSIONAL ENGINEER No. 27309 7/31/2017 CLARK RAMSEY, JR.

E-5

SHEET 5 OF 6

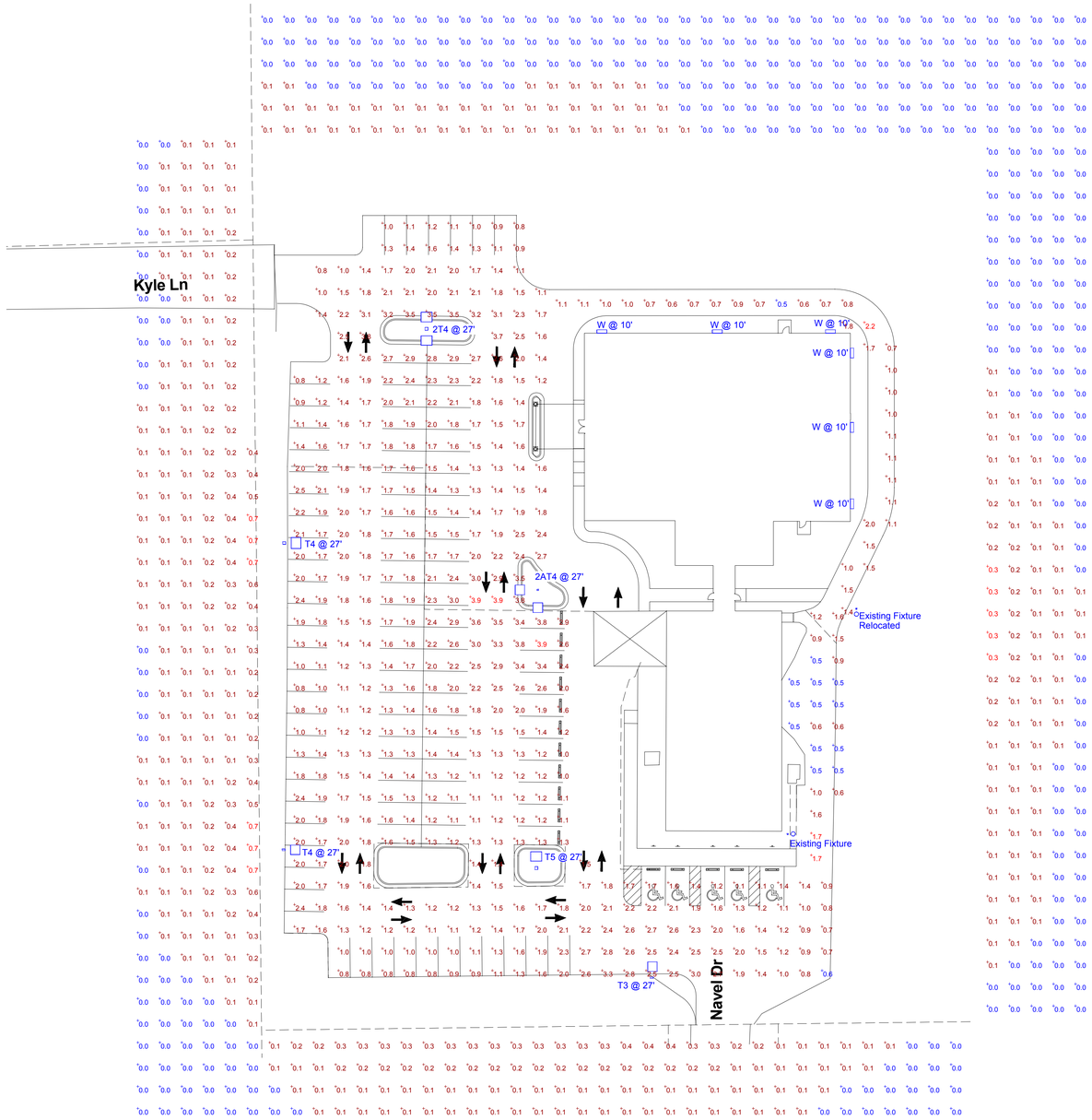

PHOTOMETRIC PLAN

SCALE: 1" = 30' - 0"

TYPE T - AREA LIGHTS

TYPE W - WALL PACKS

Schedule

Symbol	Label	Quantity	Manufacturer	Catalog Number	Description	Lamp	Number Lamps	Filename	Lumens Per Lamp	Light Loss Factor	Wattage
	T3	1	EATON - LUMARK (FORMER COOPER LIGHTING)	PRV-A40-D-UNV-T3-BZ	PREVAIL AREA AND ROADWAY LUMINAIRE (2) 70 CRI, 4000K LEDS AND TYPE III OPTICS, BRONZE PAINTED FINISH ABSOLUTE PHOTOMETRY IS BASED ON CALIBRATION FACTORS CREATED USING LAB LUMEN STANDARDS IN GONIOPHOTOMETER WITH TEST DISTANCE OF 28.75 FEET		2	PRV-A40-D-UNV-T3-BZ.ies	7605	0.96	143
	T4	2	EATON - LUMARK (FORMER COOPER LIGHTING)	PRV-A40-D-UNV-T4-BZ	PREVAIL AREA AND ROADWAY LUMINAIRE (2) 70 CRI, 4000K LEDS AND TYPE IV OPTICS, BRONZE PAINTED FINISH ABSOLUTE PHOTOMETRY IS BASED ON CALIBRATION FACTORS CREATED USING LAB LUMEN STANDARDS IN GONIOPHOTOMETER WITH TEST DISTANCE OF 28.75 FEET		2	PRV-A40-D-UNV-T4-BZ.ies	7580	0.96	143
	2T4	1	EATON - LUMARK (FORMER COOPER LIGHTING)	PRV-A40-D-UNV-T4-BZ	PREVAIL AREA AND ROADWAY LUMINAIRE (2) 70 CRI, 4000K LEDS AND TYPE IV OPTICS, BRONZE PAINTED FINISH ABSOLUTE PHOTOMETRY IS BASED ON CALIBRATION FACTORS CREATED USING LAB LUMEN STANDARDS IN GONIOPHOTOMETER WITH TEST DISTANCE OF 28.75 FEET		2	PRV-A40-D-UNV-T4-BZ.ies	7580	0.96	286
	2AT4	1	EATON - LUMARK (FORMER COOPER LIGHTING)	PRV-A40-D-UNV-T4-BZ	PREVAIL AREA AND ROADWAY LUMINAIRE (2) 70 CRI, 4000K LEDS AND TYPE IV OPTICS, BRONZE PAINTED FINISH ABSOLUTE PHOTOMETRY IS BASED ON CALIBRATION FACTORS CREATED USING LAB LUMEN STANDARDS IN GONIOPHOTOMETER WITH TEST DISTANCE OF 28.75 FEET		2	PRV-A40-D-UNV-T4-BZ.ies	7580	0.96	286
	T5	1	EATON - LUMARK (FORMER COOPER LIGHTING)	PRV-A40-D-UNV-T5-BZ	PREVAIL AREA AND ROADWAY LUMINAIRE (2) 70 CRI, 4000K LEDS AND TYPE V OPTICS, BRONZE PAINTED FINISH ABSOLUTE PHOTOMETRY IS BASED ON CALIBRATION FACTORS CREATED USING LAB LUMEN STANDARDS IN GONIOPHOTOMETER WITH TEST DISTANCE OF 28.75 FEET		2	PRV-A40-D-UNV-T5-BZ.ies	7856	0.96	143
	W	7	Lithonia Lighting	TWP LED 10C 700 40K T3M MVOLT	TWP LED WITH 10 LEDs, @700mA, 4000K AND TYPE 3 MEDIUM OPTICS	LED	1	TWP_LED_10C_700_40K_T3M_MVOLT.ies	2183	0.95	26

NOTE: AREA LIGHTS AT 27' SHALL USE 25' POLES ON A 2' CONCRETE BASE.

Statistics

Description	Symbol	Avg	Min	Max/Min	Avg/Min	Max
Driveway	+	1.1 fc	0.5 fc	4.4:1	2.2:1	2.2 fc
Existsing Driveway	+	0.8 fc	0.5 fc	3.4:1	1.6:1	1.7 fc
Parking Area	+	1.7 fc	0.6 fc	6.5:1	2.8:1	3.9 fc
Property Line 1	+	0.1 fc	0.0 fc	N/A	N/A	0.7 fc
Property Line 2	+	0.0 fc	0.0 fc	N/A	N/A	0.3 fc

REV.	DATE	INITIAL

PHOTOMETRIC PLAN

GYMNASIUM/FELLOWSHIP HALL ADDITION FOR UHCPC

3126 NEVEL DR. HUNTSVILLE, AL. 35810

DESIGN: C. RAMSEY

REVIEWED: C. RAMSEY 256-684-9445

DATE: 31 JULY 2017

SCALE: 1" = 30' - 0"

ALABAMA REGISTERED PROFESSIONAL ENGINEER No. 27309 7/31/2017 CLARK RAMSEY, JR.

E-6

SHEET 6 OF 6