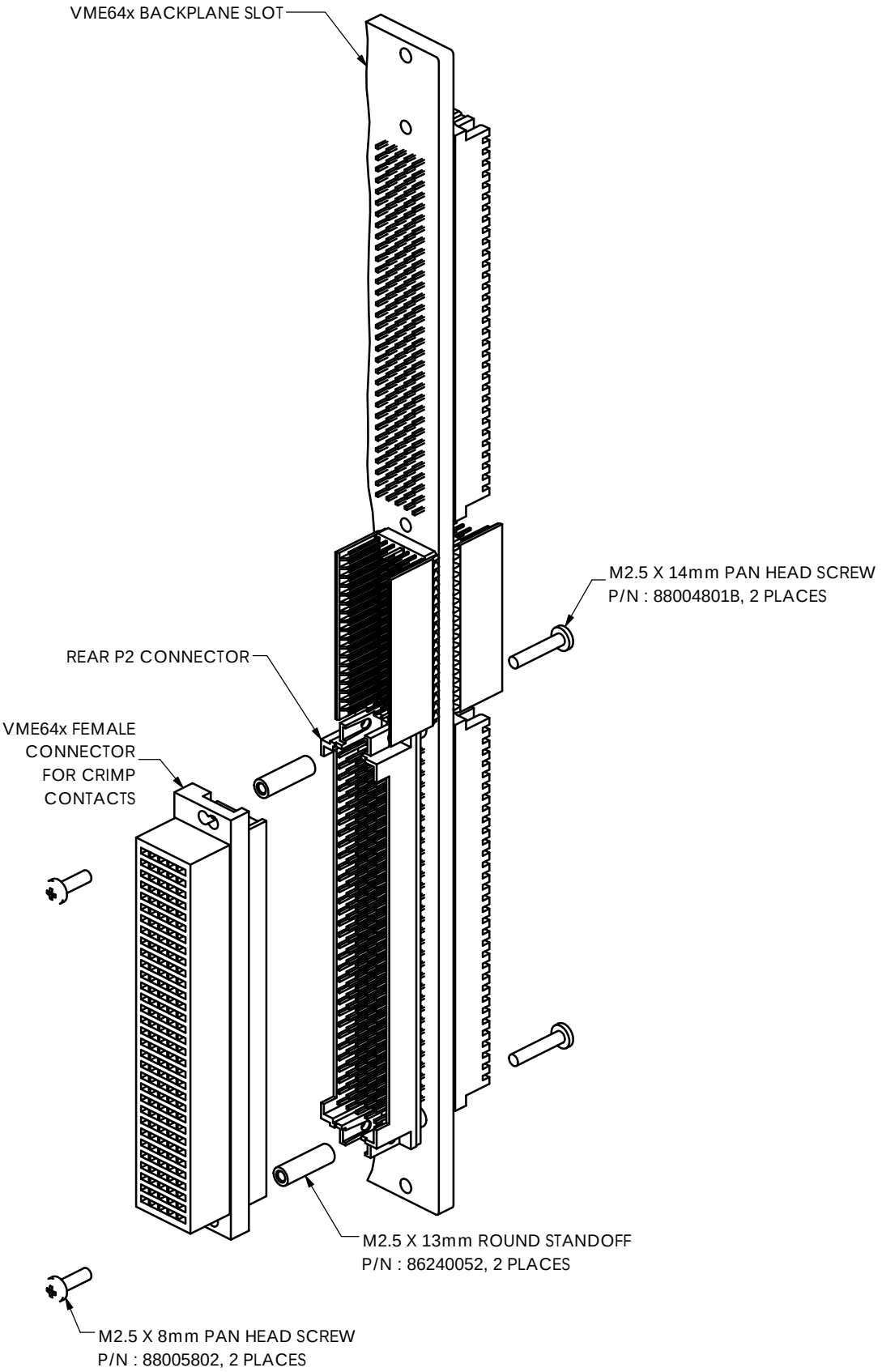# VME64x BACKPLANE P2 CABLE ASSY MOUNTING