DESCRIPTION	ITEM NO.	SIZE	COST EST.	QTY	SUB TOTAL
SQ. TUBE - 2.00 X .083	1	36.00	$10.45	2	$20.90
REC. TUBE - 2 X 3 X .083	2,3,4	36.00	$26.92	1	$26.92
TUBE - 2.50 O.D X .188	5	7.00	$14.77	1	$14.77
TUBE - 2.00 O.D X .188	6	10.25	$14.86	1	$14.86
ROUND - 2.00	7	1.00	$1.70	1	$1.70
ROUND - 2.50	8	1.00	$2.44	1	$2.44
THREADED ROD - .50-13	9	36.00	$6.58	1	$6.58
PLATE - .25	11,12,31,32	12 X 12	$14.66	1	$14.66
BAR - .19 X 1.50	10,13,14, 15,16,18	72.00	$10.94	1	$10.94
TUBE - 0.50 O.D X .12	19-22	12.00	$3.60	1	$3.60
TUBE - 0.63 O.D X .049	23,24	12.00	$4.07	1	$4.07
SQ. TUBE - 1.00 X .12	25,26	8.00	$2.00	2	$4.00
TUBE - 0.75 O.D X .12	27	18.00	$7.23	1	$4.84
BAR - .13 X 1.00	28,29	36.00	$2.79	1	$2.79
			TOTAL STEEL COST PRE TAX =		$133.07

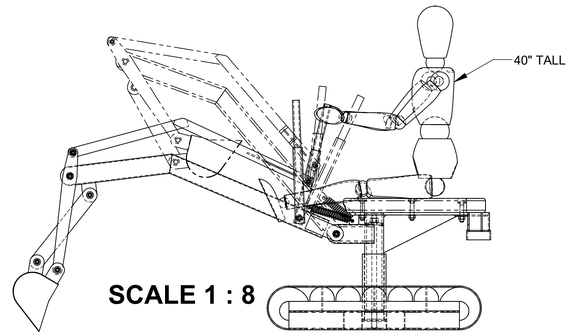

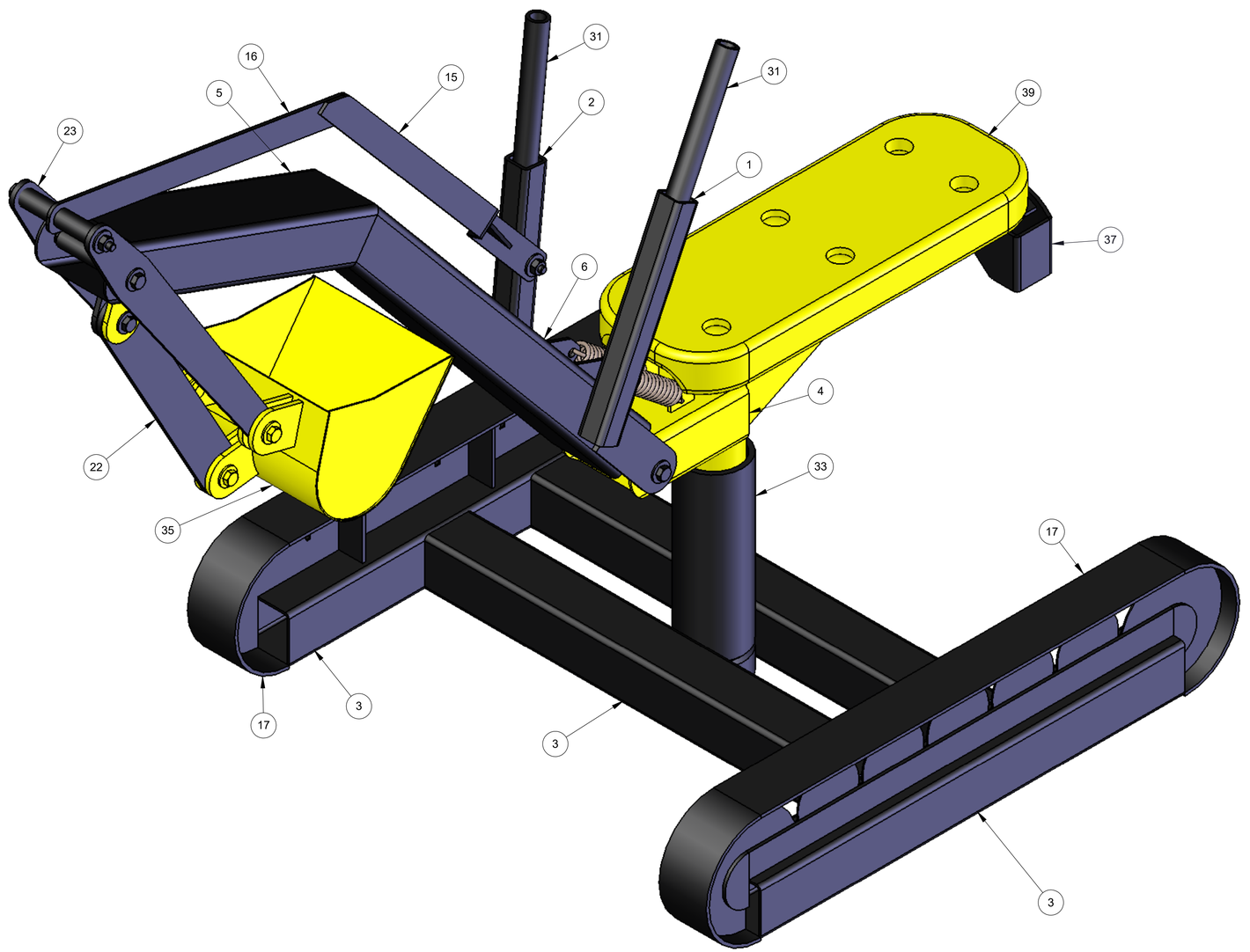

BILL OF MATERIAL

QTY.	DESCRIPTION	UNIT WT	ITEM NO.
1	SQ. TUBE,1.00 X .120 X 8.00 LG	0.90	1
1	SQ. TUBE,1.00 X .120 X 8.00 LG	0.86	2
4	SQ. TUBE, 2.00 X .083 X 18.00	3.16	3
1	REC. TUBE, 2.00 X 3.00 X .083 X 5.00	0.90	4
1	REC. TUBE, 2.00 X 3.00 X .083 X 12.00	2.45	5
1	REC. TUBE, 2.00 X 3.00 X .083 X 18.00	3.88	6
1	ROUND,2.00 DIA. X 1.00	0.81	7
1	ROUND,2.50 DIA. X 1.00	1.30	8
1	THREADED ROD,.50 X 12.00 LG	0.66	9
2	PLATE - 0.25 X .75 X 2.00 LG	0.03	10
2	PLATE - 0.25 X 1.00 X 1.00 LG	0.03	11
1	PLATE,.25 X 4.00 X 8.00	1.13	12
1	PLATE,.25 X 4.00 X 12.00	3.12	13
2	BAR,.13 X .75 X 3.00	0.05	14
1	BAR,.13 X 1.00 X 16.575 LG	0.57	15
1	BAR,.13 X 1.00 X 13.00 LG	0.45	16
2	BAR,.13 X 2.00 X 37.75	2.28	17
1	BAR,.19 X 1.50 X 1.63 LG	0.09	18
2	BAR,.19 X 1.50 X 4.00 LG	0.30	19
6	BAR,.19 X 1.50 X 2.00 LG	0.14	20
2	BAR,.19 X 1.50 X 2.00 LG	0.13	21
1	BAR,.19 X 1.50 X 10.50 LG	0.79	22
2	BAR,.19 X 1.50 X 13.50 LG	0.84	23
4	TUBE 0.50 O.D. X .12 X .31 LG	0.01	24
4	TUBE 0.50 O.D. X .12 X .69 LG	0.03	25
1	TUBE 0.50 O.D. X .12 X 1.25 LG	0.05	26
1	TUBE 0.50 O.D. X .12 X 3.44 LG	0.14	27
2	TUBE 0.63 O.D. X .049 X 1.44 LG	0.04	28
2	TUBE 0.63 O.D. X .049 X 2.56 LG	0.06	29
1	TUBE 0.63 O.D. X .049 X 3.94 LG	0.10	30
2	TUBE 0.75 O.D. X .120 X 8.00 LG	0.54	31
1	TUBE 2.00 O.D. X .188 X 10.25 LG	3.06	32
1	TUBE 2.50 O.D. X .188 X 7.00 LG	2.69	33
2	BUCKET,18GA (.048) X 4.75 X 5.25	0.22	34
1	BUCKET,18GA (.048) X 6.00 X 11.33	0.93	35
2	SHEET,18 GA,ROLLER TRACK STIFFENERS	1.75	36
1	WEIGHT BOX	0.85	37
2	WEIGHT BOX MOUNTING BRACKETS	0.14	38
1	PT LUMBER,2 X 6 (1.50 X 5.50) X 15.00 LG	1.40	39
5	BOLT,HEX HEAD, .25-20UNC X .75	0.0192	40
4	BOLT,HEX HEAD, .25-20UNC X 1.00	0.0227	41
1	BOLT,HEX HEAD, .25-20UNC X 1.75	0.0331	42
1	BOLT,HEX HEAD, .25-20UNC X 4.00	0.0645	43
6	CARRIAGE BOLT,.38-16 X 2.00 LG	0.09	44
17	WASHER, PLAIN, .25	0.007	45
1	WASHER, PLAIN, .50	0.018	46
11	NUT, HEX, .25-20UNC	0.008	39
1	NUT, HEX, .50-13UNC	0.043	48
6	NUT, HEX, .38-16UNC	0.018	49
2	SPRING	0.13	50

DESIGNS BY Phil .com

PG: 1
OF: 7

CREW'S SANDBOX DIGGER®

DESIGNED BY PHIL JOHNSON | TOTAL WEIGHT = 55.04

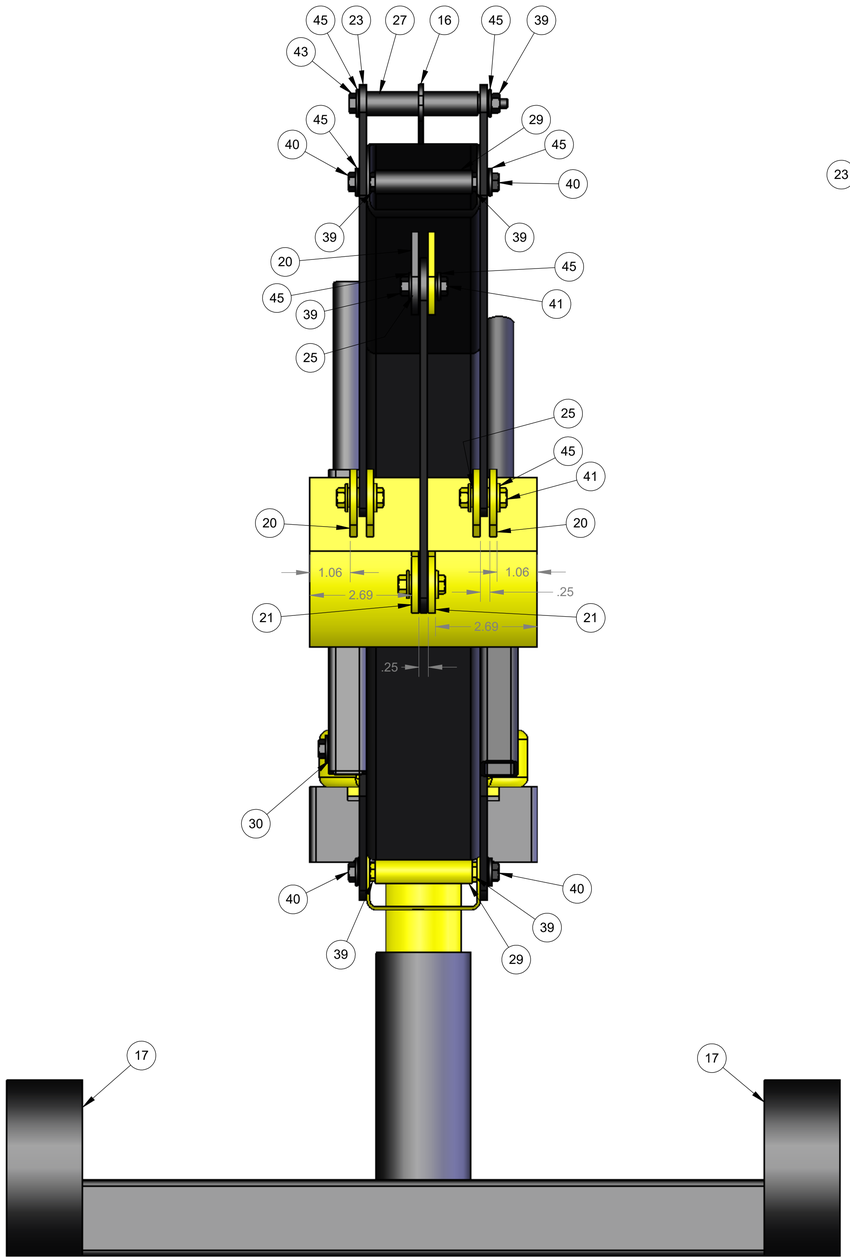

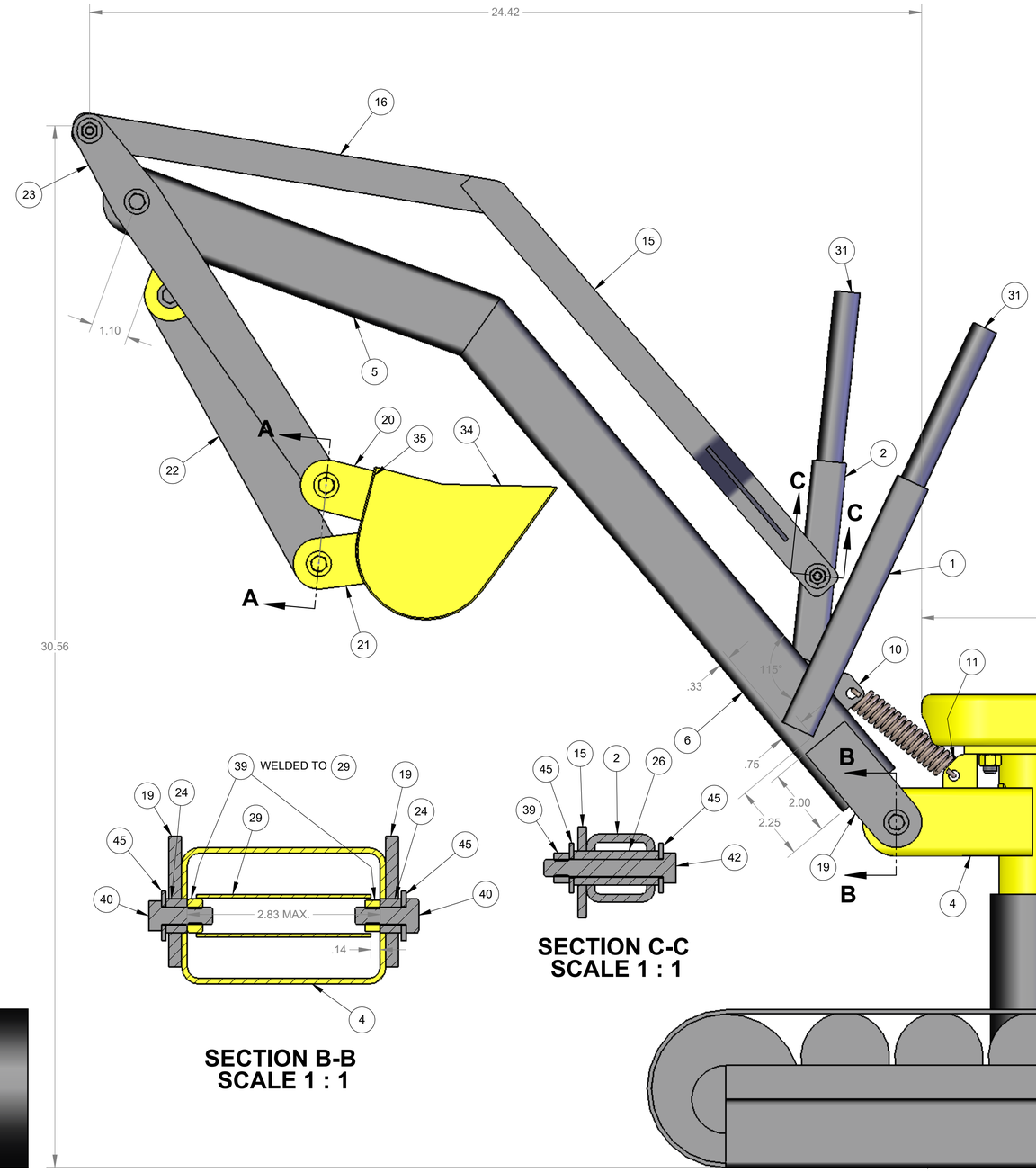

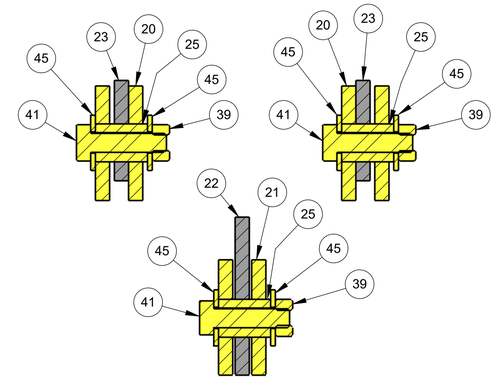

SECTION A-A
SCALE 1 : 1

SECTION B-B
SCALE 1 : 1

SECTION C-C
SCALE 1 : 1

DESIGNS BY Phil .com

PG: 2
OF: 7

CREW'S SANDBOX DIGGER ©

DESIGNED BY PHIL JOHNSON	TOTAL WEIGHT = 55.04

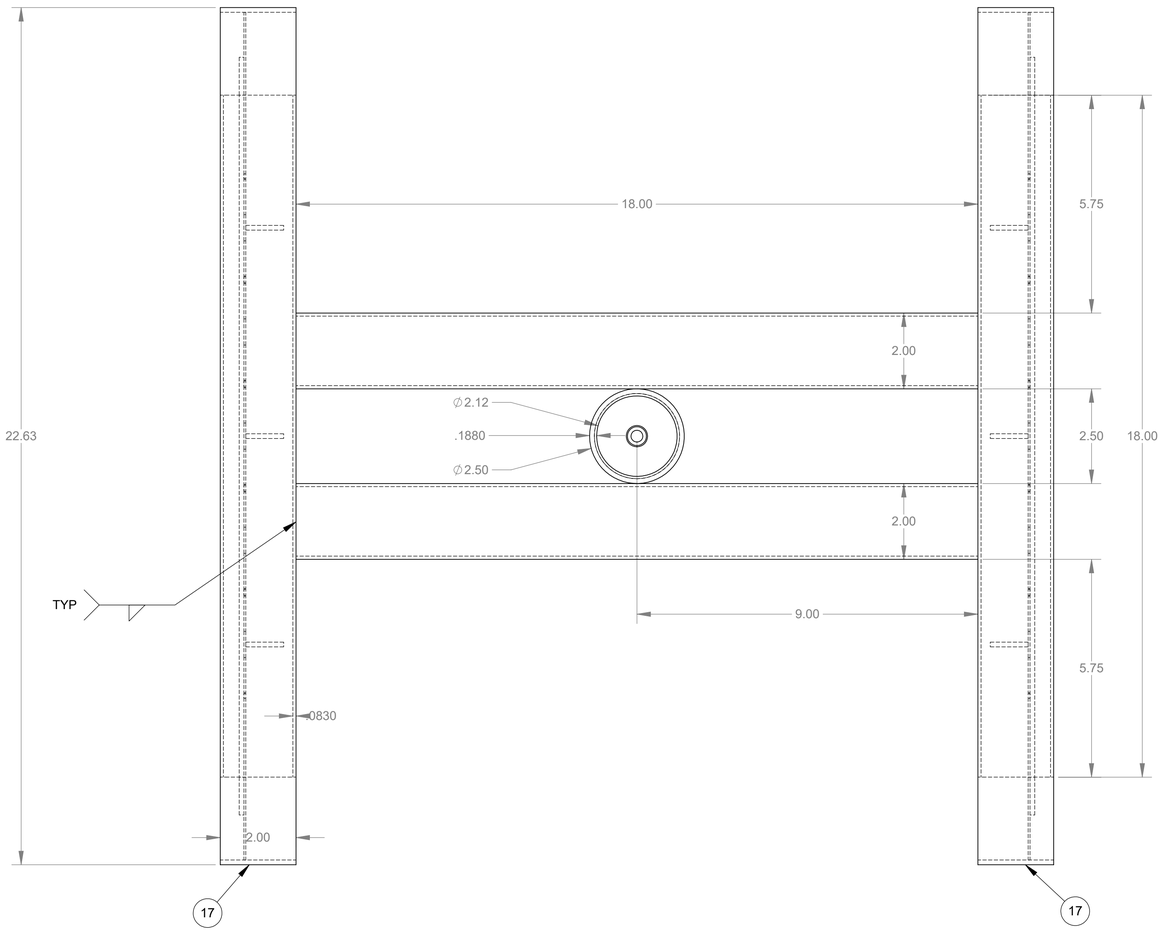

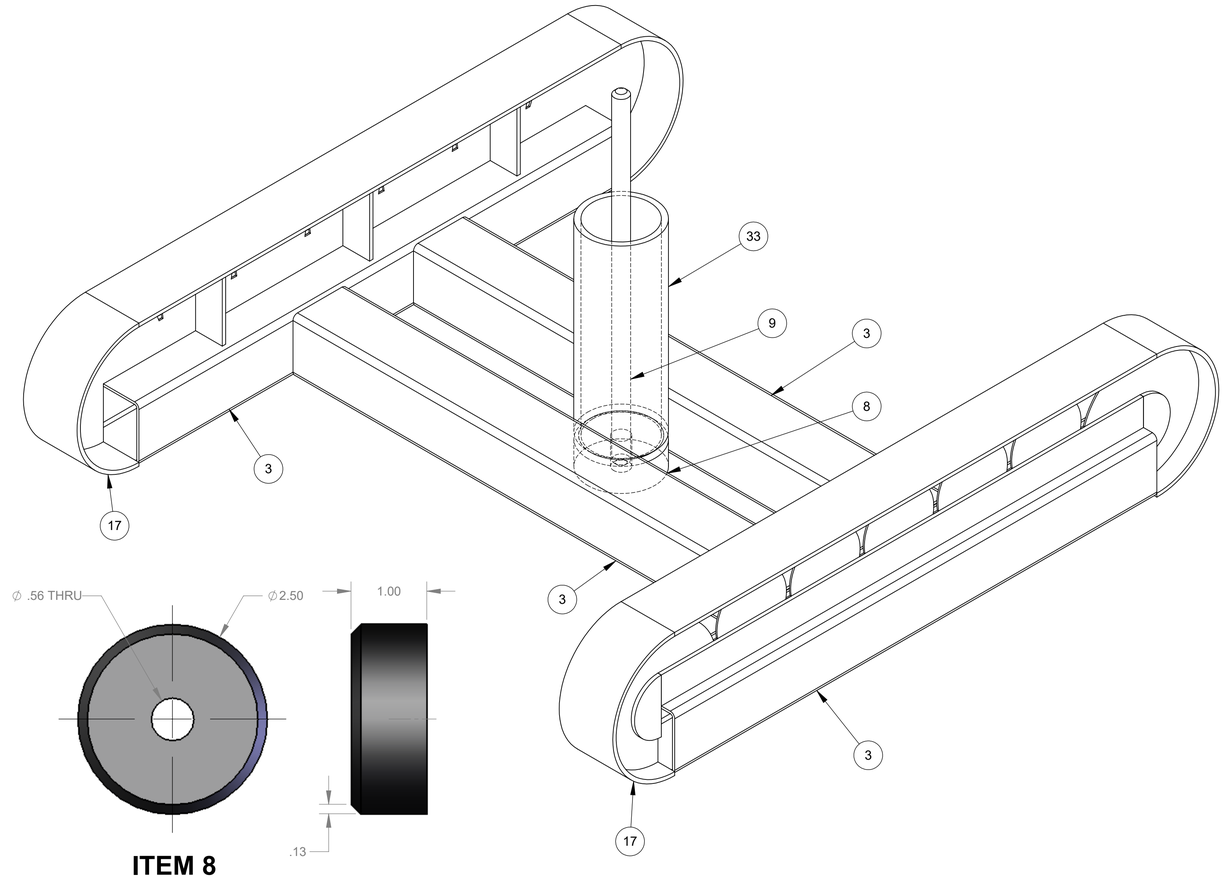

ITEM 8
SCALE 1 : 1

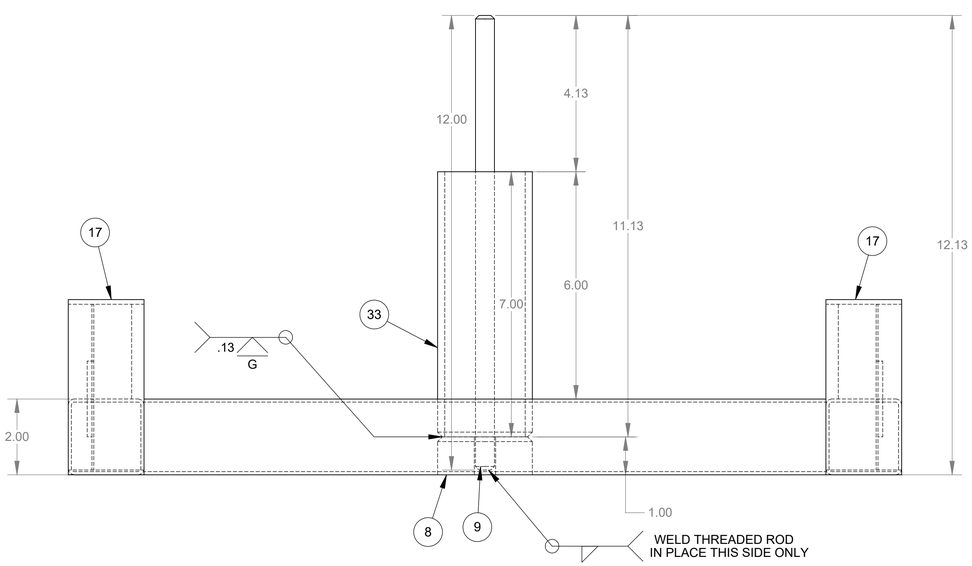

ITEM 17

DESIGNS BY Phil .com

PG: 3
OF: 7

CREW'S SANDBOX DIGGER®

DESIGNED BY PHIL JOHNSON | TOTAL WEIGHT = 55.04

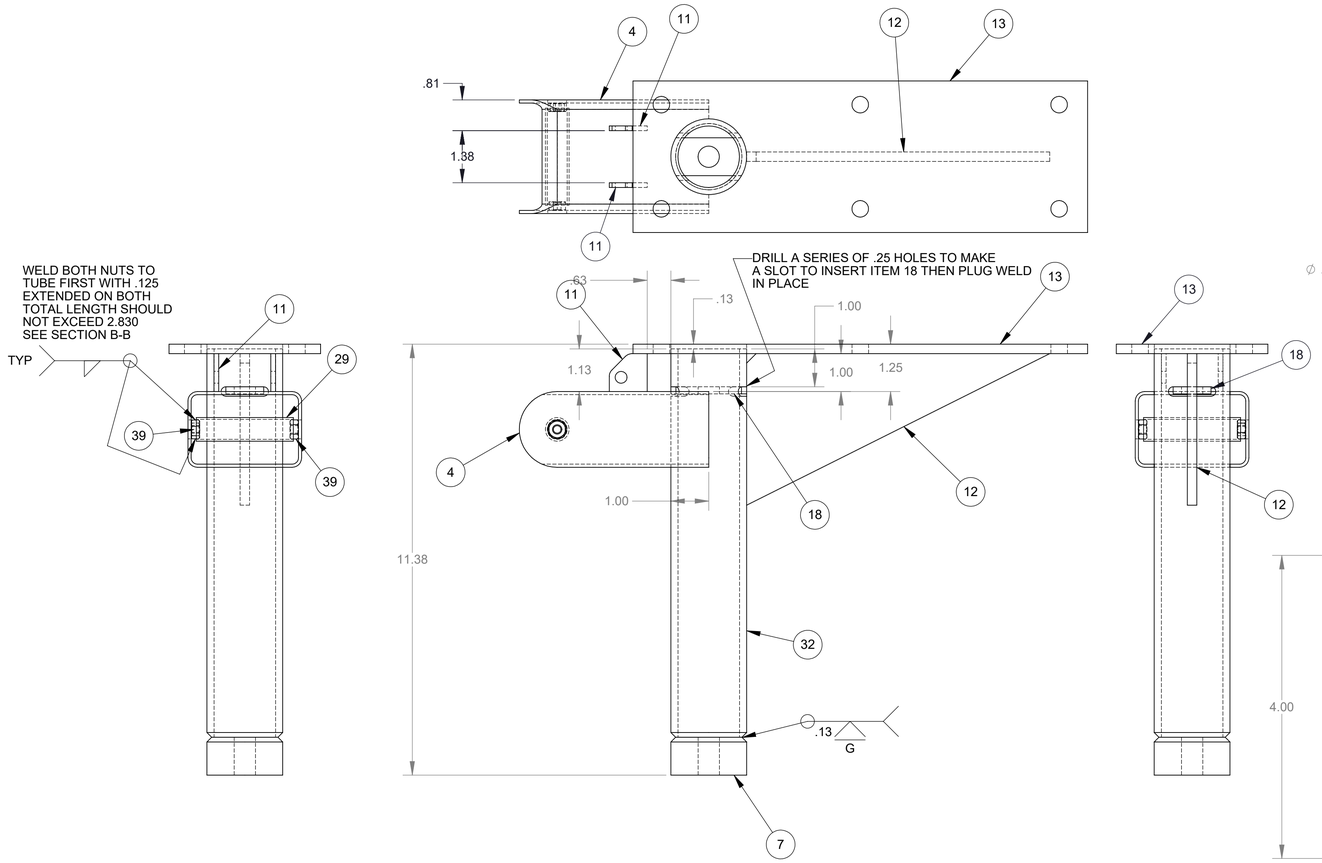

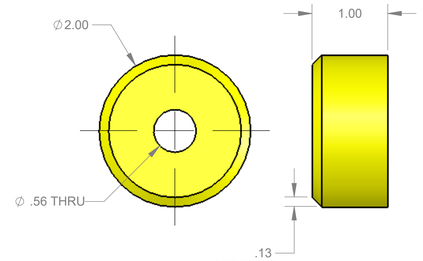

ITEM 7
SCALE 1 : 1

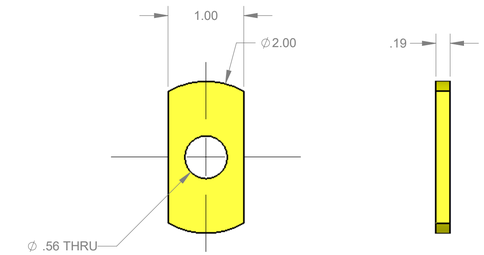

ITEM 18
SCALE 1 : 1

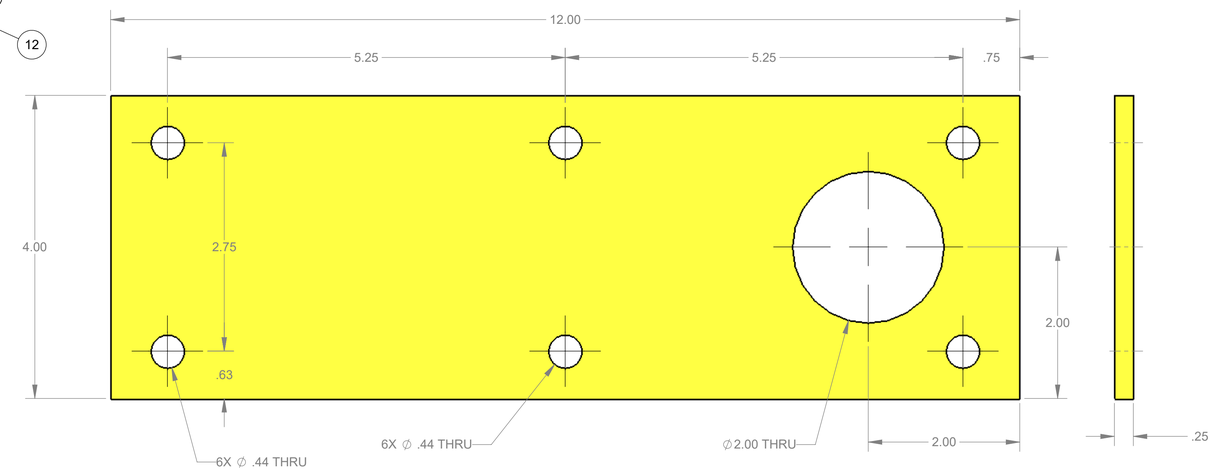

ITEM 13
SCALE 1 : 1

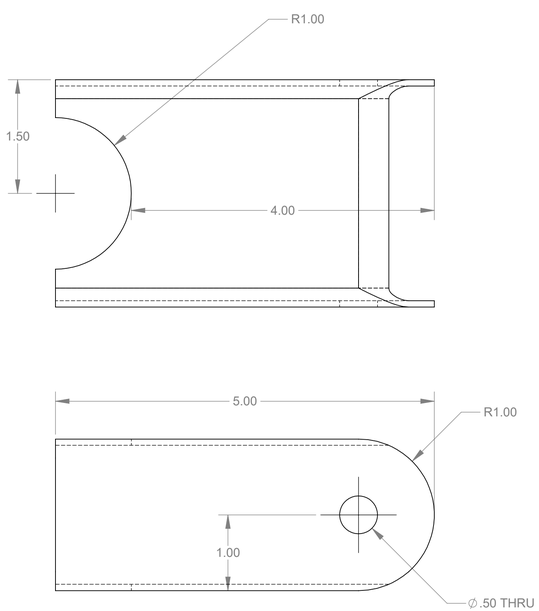

ITEM 4
SCALE 1 : 1

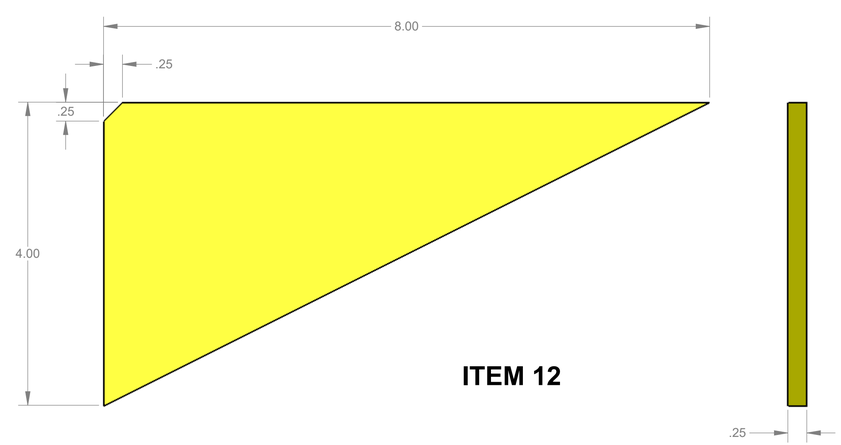

ITEM 12

SCALE 1 : 1

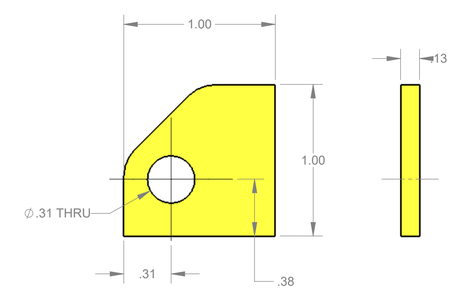

ITEM 11
SCALE 2 : 1

DESIGNS BY Phil .com

PG: 4
OF: 7

CREW'S SANDBOX DIGGER™© | DESIGNED BY PHIL JOHNSON | TOTAL WEIGHT = 55.04

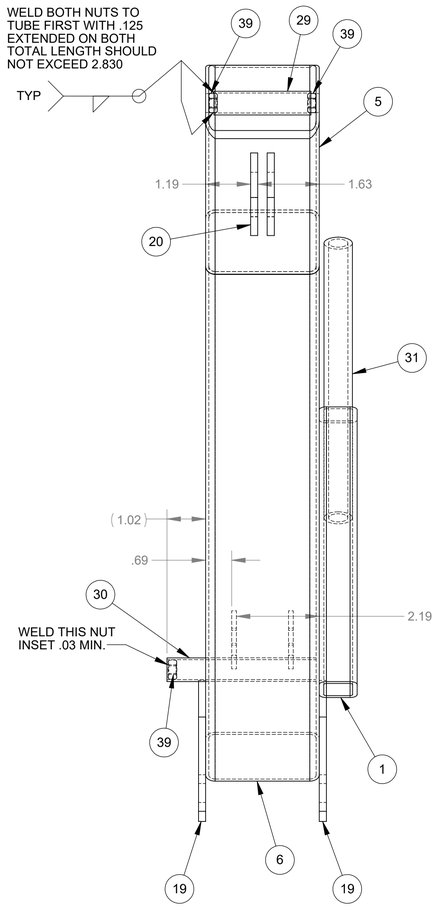

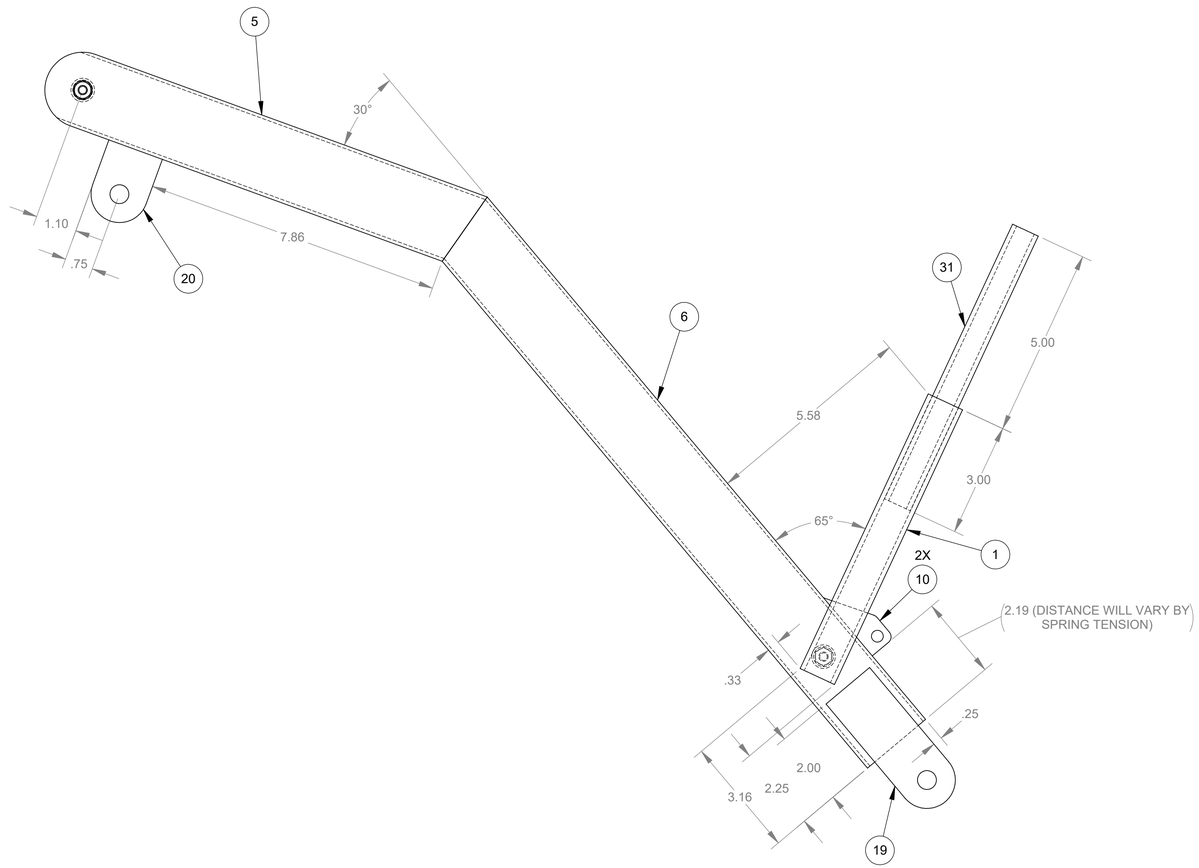

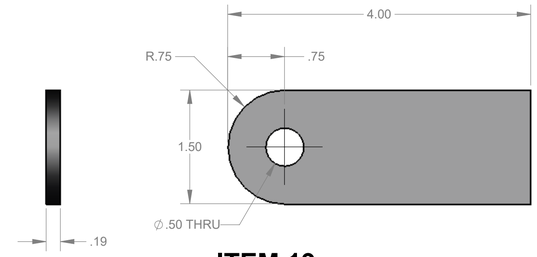

ITEM 19
SCALE 1 : 1

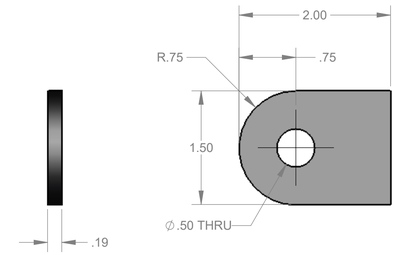

ITEM 20
SCALE 1 : 1

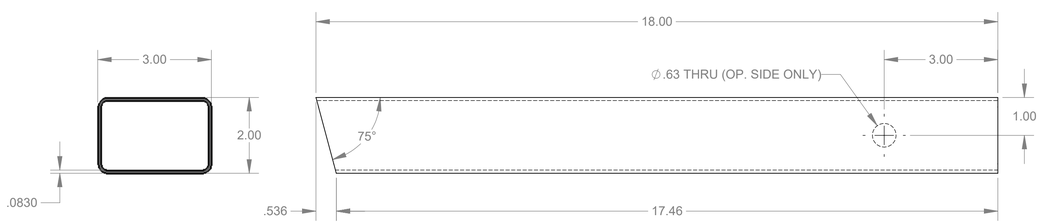

ITEM 6

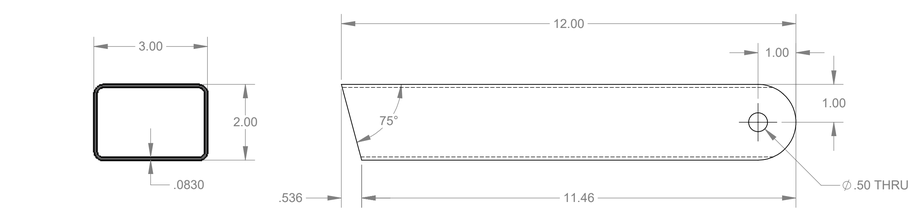

ITEM 5

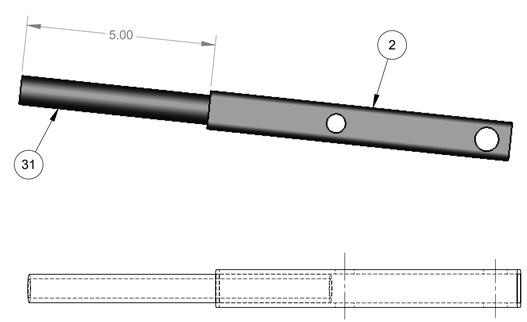

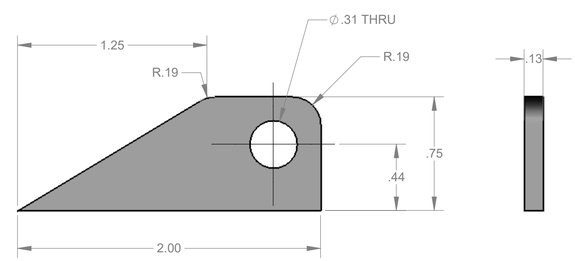

SCALE 2 : 1
ITEM 10

DESIGNS BY Phil .com

PG: 5
OF: 7

CREW'S SANDBOX DIGGER™ | DESIGNED BY PHIL JOHNSON | TOTAL WEIGHT = 55.04

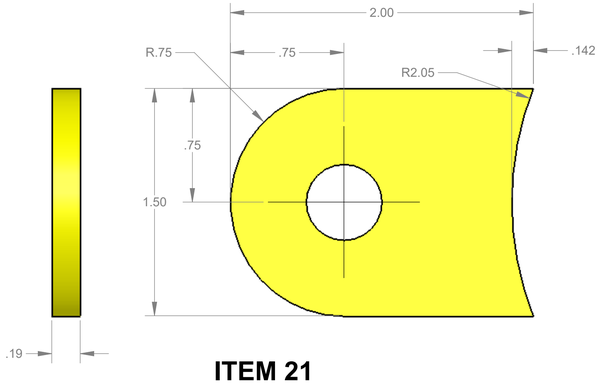

ITEM 21
SCALE 2 : 1

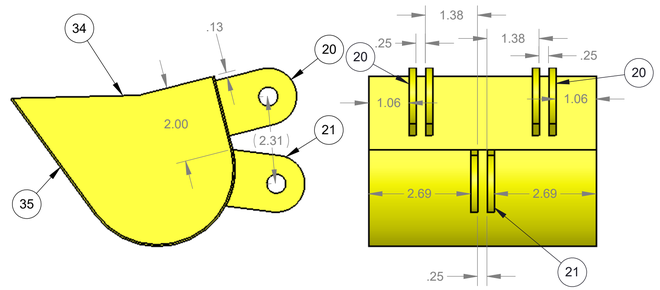

ITEMS 20, 21, 34, & 35 WELDMENT

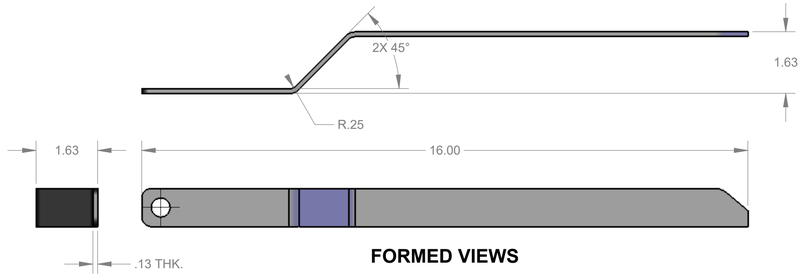

FORMED VIEWS

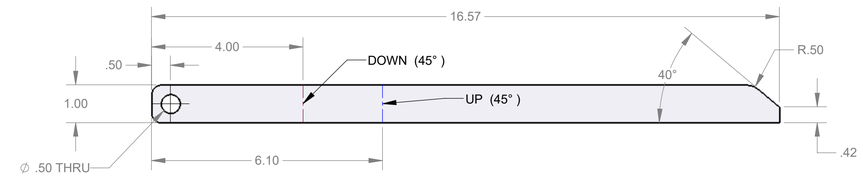

FLAT PATTERN

ITEM 15

ITEM 23
SCALE 1 : 1

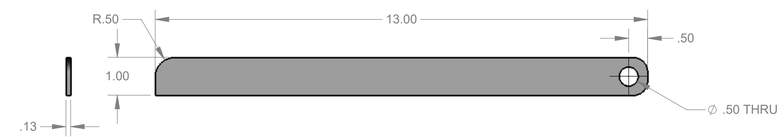

ITEM 16

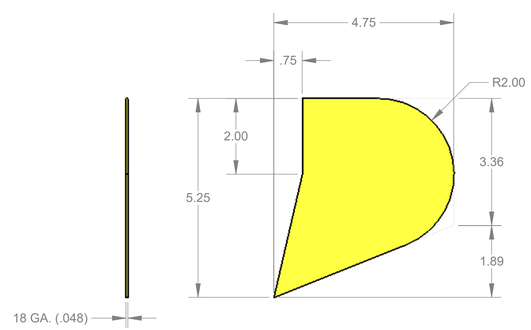

ITEM 34

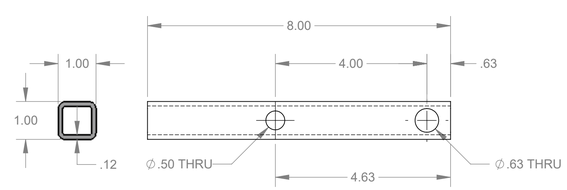

ITEM 2

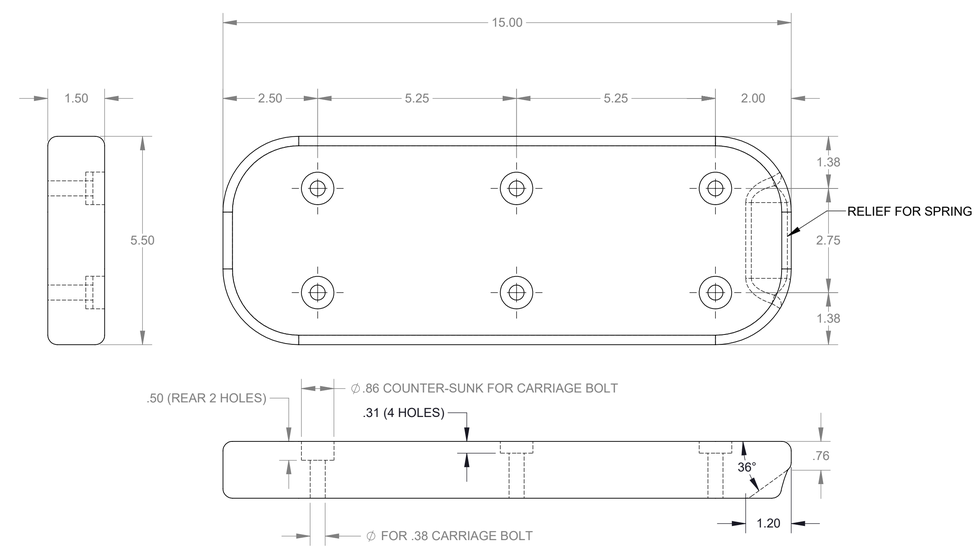

ITEM 39

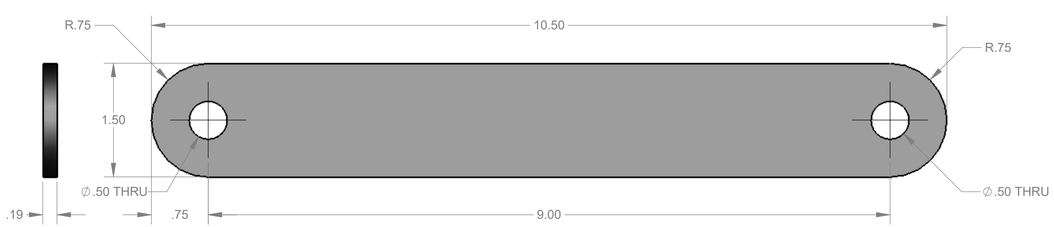

ITEM 22
SCALE 1 : 1

DESIGNS BY Phil .com

PG: 6
OF: 7

CREW'S SANDBOX DIGGER ™ © | DESIGNED BY PHIL JOHNSON | TOTAL WEIGHT = 0.13

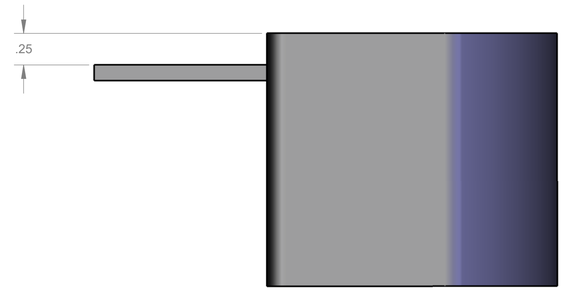

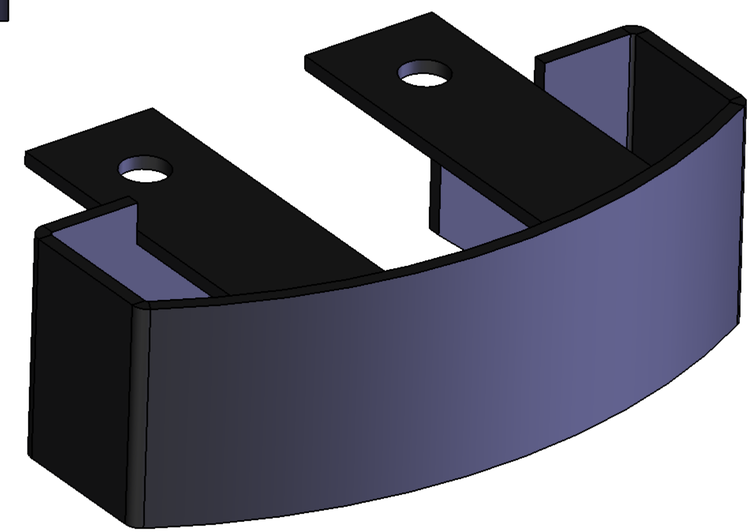

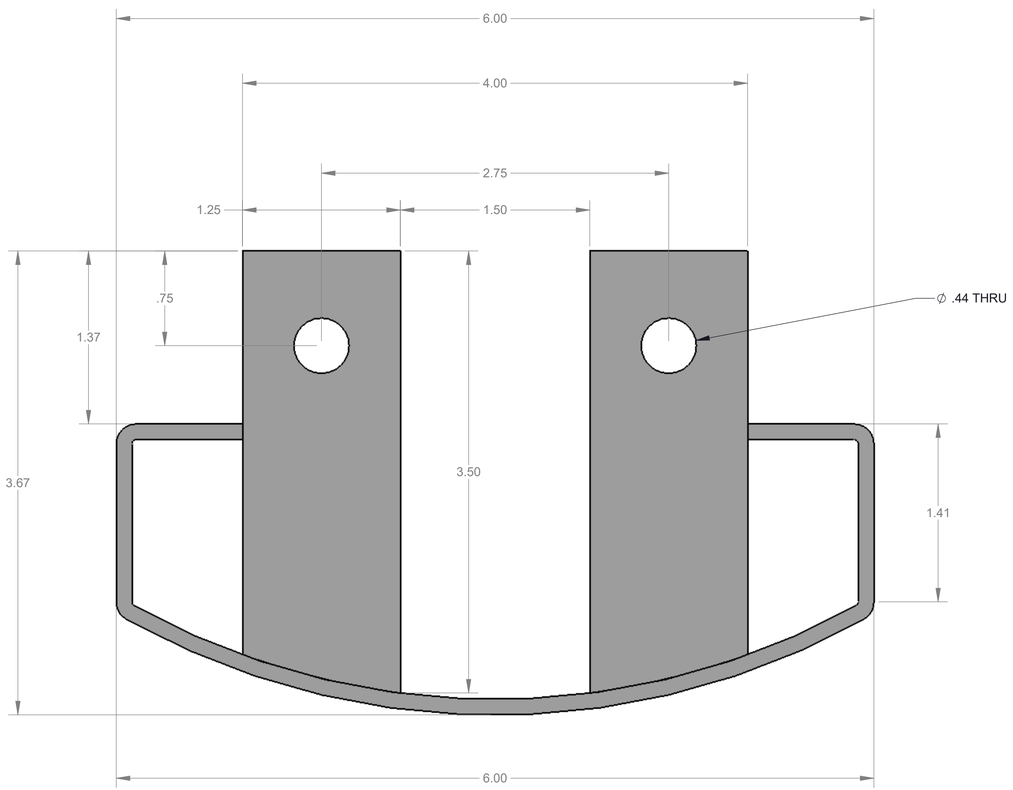

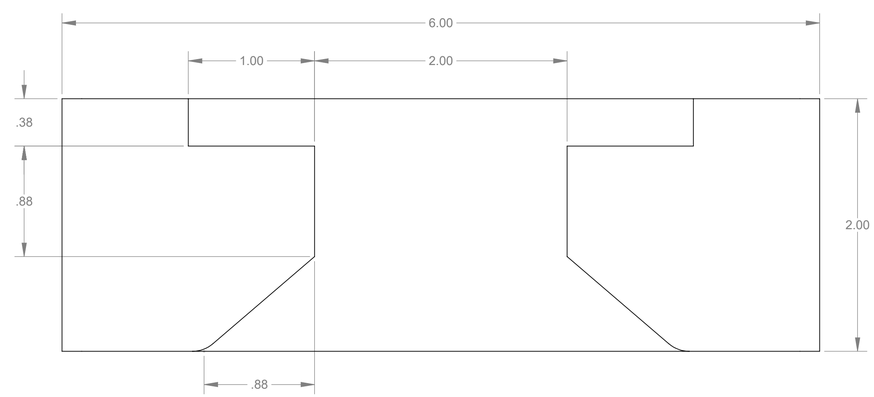

DESIGNS BY Phil .com

PG: 7
OF: 7

CREW'S SANDBOX DIGGER ©

DESIGNED BY PHIL JOHNSON

TOTAL WEIGHT = 55.04