Optimal Solutions for the Future

DNM 5AX series

5-Axis Vertical Machining Center

DNM 5AX series
DNM 200/5AX
DNM 350/5AX

ver. EN 160623 SU

DNM 5AX series

The DNM 5AX Series are high performance 5 axes vertical machining centers designed for easy operation, even for users who have no previous experience of 5 axis machining.

Contents

Optimized Column and Bed Design

High feedrate and precision have been realized by optimized column and bed design with 3D simulation technique.

Direct Coupled Spindle

Direct-coupled spindle minimized noise and vibration. High speed and heavy-duty cutting can be performed with a single setting.

High-precision Travel System

Roller-type LM guideways and high-rigidity coupling have been adopted to ensure excellent rigidity and accuracy of the X, Y and Z linear travel system.

Basic Structure

High feederate and precision cutting achieved by optimized column and bed design.

High-precision Machine Structure

High speed cutting & the highest accuracy with high precision machine structure.

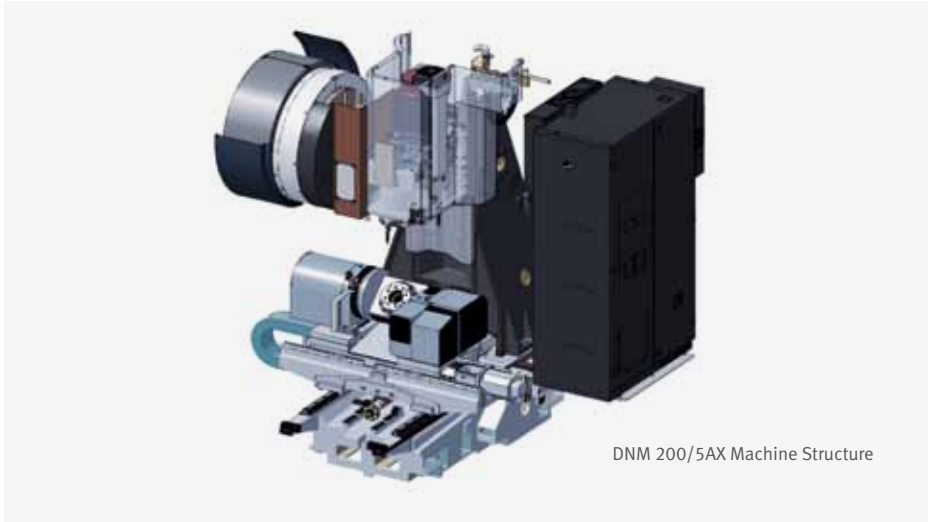

DNM 200/5AX Machine Structure

Axis drive system

High-precision Travel System

High rigidity and precision of the X,Y,Z axis drive systems are achieved by using roller type linear guideways and highly rigid couplings. Speed and accuracy are further enhanced with the nut cooling system which minimizes thermal error of ball screws.
(Nut cooling system : Only DNM 350/5AX)

High Rigid Roller-type linear guideway

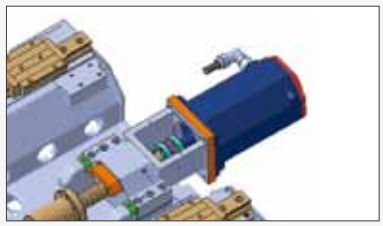

Rigidity and accuracy of feed system are improved with roller type linear guideway and coupling.

Roller type linear guideways

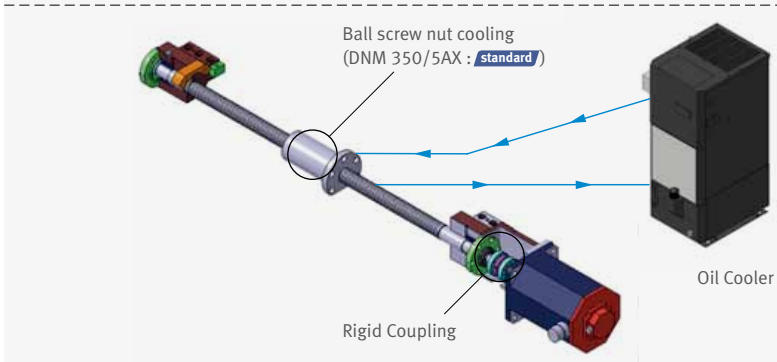

Item			X	Y	Z
DNM 200/5AX	Travels	mm (inch)	400 (+200, -200) (15.75 (+7.87, -7.87))	435 (+180, -255) (17.13 (+7.09, -10.04))	500 (19.69)
	Rapid traverse	m/min (ipm)	36 (1417.3)	36 (1417.3)	30 (1181.1)
DNM 350/5AX	Travels	mm (inch)	600 (23.62)	655 (25.79)	500 (19.69)
	Rapid traverse	m/min (ipm)	36 (1417.3)	36 (1417.3)	30 (1181.1)

Tool Changer

Along with rapid tool change that enables higher productivity, a wide range of choices is available for tool magazines.

Automatic Tool Changer (ATC)

Enhanced productivity achieved with the CAM-type tool changer that supports faster tool changing.

Item	Number of tools (ea)	T-T-T (s)
DNM 200/5AX	30 (40)	1.3
DNM 350/5AX	30 (40, 60)	1.3

Rotary table

Wide machining area for vairous workpiece and machine set up.

Max. Size & Weight of Work

DNM 200/5AX

Max. workpiece swing diameter x height

Ø300 x 200mm (11.8 / 7.9 inch)

Table loading capacity (A-axis 0°)

60kg (132.3 lb)

DNM 350/5AX

Max. workpiece swing diameter x height

Ø400 x 335mm (15.7 / 13.2 inch)

Table loading capacity

250kg (551.1 lb)

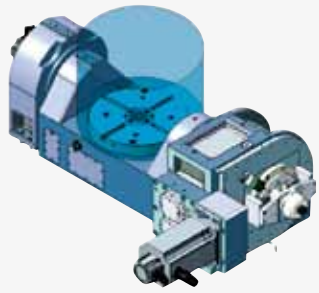

* Actual appearance of the DNM 200/5AX rotary table may differ from the above picture.

Rotary Table

- Applied with high-rigidity, high-precision axial and radial roller bearings
- Backlash reduced with higher structural stability
- A and C axes are hydraulically clamped for maximum rigidity

Rotary Encoder option

* Actual appearance of the DNM 350/5AX rotary table may differ from the above picture.

Item		A-axis	C-axis
DNM 200/5AX	Travels (deg)	150 (+30, -120)	360
	Rapid traverse (r/min)	20	30
DNM 350/5AX	Travels (deg)	150 (+30, -120)	360
	Rapid traverse (r/min)	20	30

Spindle

Direct-coupled spindle head minimizes noise and vibration.

Direct Coupled High Precision Spindle

Direct coupled, high precision spindles supports high speed and heavy duty cutting in a single set up. Machining performance is optimised by minimising vibration and noise, while power loss at high speed is also minimised.

Max. spindle speed

12000r/min

(DNM 350/5AX : 20000 r/min option**)**

Spindle motor power

18.5 / 11kW

(24.8 / 14.8 Hp)

Dual Contact Spindle

Tool rigidity is enhanced by firm clamping with the spindle, while tool life cycle and cut-surface roughness are improved due to reduced vibration realized by dual contact spindle.

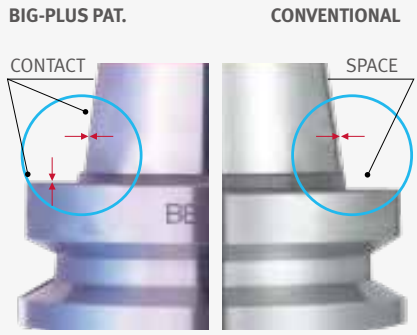

Spindle Cooling

High-accuracy oil cooler minimizes thermal error of the spindle by removing the heat generated at the bearings and motor.

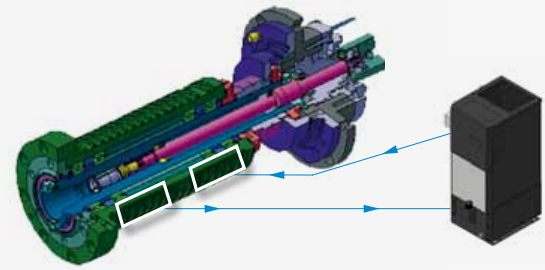

Cutting Performance

From high-speed machining to heavy duty cutting, diverse machining processes are applicable for complex-shaped workpiece.

DNM 200/5AX

Face mill Carbon steel (SM45C)

ø80mm Face Mill (6Z)

Machining removal rate	Spindle speed	Feed rate
269 cm^3/min (16.42 $inch^3$)	1500 r/min	2100 mm/min (82.7 ipm)

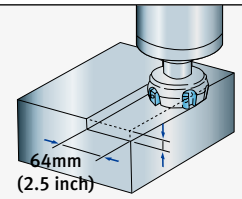

Drill Carbon steel (SM45C)

ø32mm Drill (2Z)

Spindle speed	Feed rate
1200 r/min	120 mm/min (4.7 ipm)

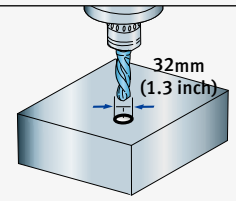

Tap Carbon steel (SM45C)

ø73mm Drill (2Z)

Tool	Spindle speed
M30 x 3.5	212 r/min

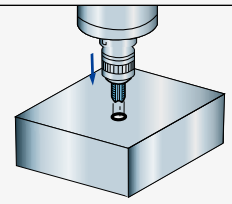

DNM 350/5AX

Face mill Carbon steel (SM45C)

ø80mm Face Mill (5Z)

Machining removal rate	Spindle speed	Feed rate
365 cm^3/min (22.3 $inch^3$)	1500 r/min	1900 mm/min (74.8 ipm)

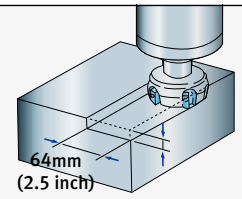

Drill Carbon steel (SM45C)

ø40mm Drill (2Z)

Spindle speed	Feed rate
1200 r/min	180 mm/min (7.09 ipm)

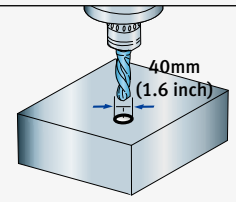

Tap Carbon steel (SM45C)

ø73mm Drill (2Z)

Tool	Spindle speed
M30 x 3.5	212 r/min

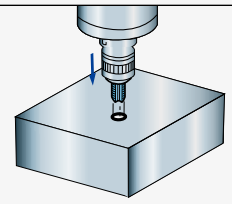

* The results, indicated in this catalogue are provides as example. They may not be obtained due to differences in cutting conditions and environmental conditions during measurement.

Standard / Optional Specifications

Diverse optional features are available to meet specific customer requirements.

● Standard ○ Optional X N/A

NO.	Description	Features	DNM 200/5AX	DNM 350/5AX
1	Air blower		○	○
2	Air gun		○	○
3	Automatic tool changer	30 Tools	●	●
4		40 Tools	○	○
5		60 Tools	X	○
6	Automatic tool measurement	TS27R : RENISHAW	○	○
7	Automatic workpiece measurement	NONE	●	●
8		OMP60_RENISHAW	○	○
9	Chip conveyor	Hinge / Scraper / Drum filter type		
10	Coolant gun		○	○
11	Coolant Tank		●	●
12	Easy Operation Package	Tool load monitor	●	●
13		Alram / M-code / G-code / ATC recovery help	●	●
14		Table moving for setup / Easy work coordinate setting	●	●
15	Electric cabinet air conditioner		○	○
16	Electric cabinet light		○	○
17	Electric cabinet line filter		○	○
18	Linear scale	X Axis	○	○
19		Y Axis	○	○
20		Z Axis	○	○
21	MPG	1 MPG_PORTABLE TYPE	●	●
22		1 MPG_PORTABLE_W/ENABLE TYPE	○	○
23		3 MPG_PORTABLE	○	○
24	NC System	DOOSAN FANUC i	●	●
25		FANUC 31iB5	X	○
26		HEIDENHAIN	X	○
27	NC system lcd size	10.4 inch_FANUC (Color)	●	●
28		15.1 inch_HEIDENHAIN (Color)	X	○
29	Oil Skimmer	Belt Type	○	○
30	Power transformer		○	○
31	Shower coolant		○	○
32	Spindle motor power	18.5 / 11 kW (24.8 / 14.8 Hp)	●	●
33		22 / 18.5 kW (29.5 / 24.8 Hp)	X	○
34		22 / 11 kW (29.5 / 14.8 Hp)	X	○
35	Spindle speed	12000 r/min	●	●
36		20000 r/min	X	○
37	Test bar		○	○
38	Through spindle coolant	NONE	●	●
39		1.5 KW_2.0 MPA	○	○
40		4.0 KW_2.0 MPA	○	○
41		5.5 KW_7.0 MPA_DUAL BAG FILTER	○	○
42	Work & tool counter	WORK / TOOL	○	○

* More options will require consultation with Doosan.

Peripheral Equipment

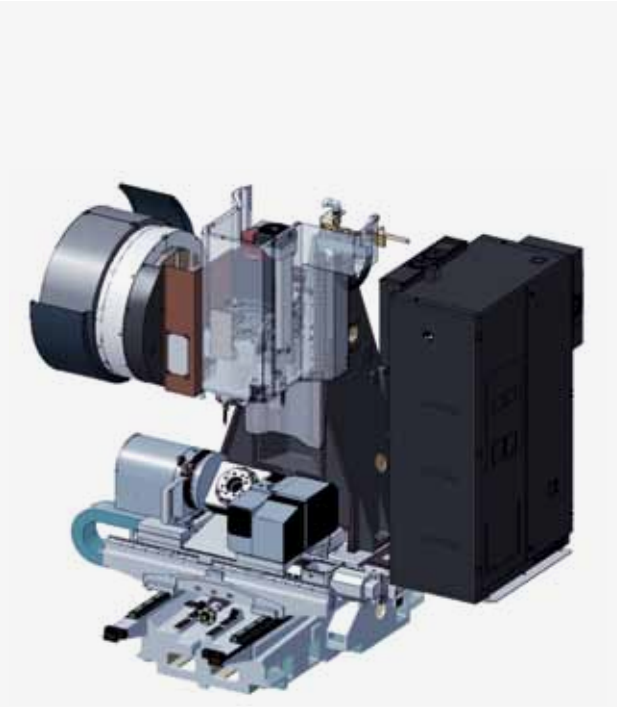

1. Chip conveyor option

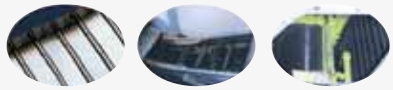

Hinge type | Scraper type | Drum filter type

2. Large capacity coolant tank built-in with chip pan and box filter

Easier chip disposal with box-type filter

3. Shower coolant option

4. Coolant system

5. Auto-door type top cover

The top cover helps enhancing convenience when loading /unloading heavy workpiece on the processing table.

6. Internal screw conveyor

Intelligent Kinematic Compensation for 5-axis Recommended Option

For high accuracy 5-axis machining, Intelligent Kinematic Compensation function is recommended. This function minimizes error in complex 5-axis machining applications by maintaining tip of the tool in correct position in respect to the workpiece. In order to properly utilize this function, following four optional items are required.

Recommended optional items

1. Software

FANUC NC: DCP-i (Developed by DOOSAN)

Heidenhain NC: Kinematic opt

2. Receiver

3. Touch Probe

4. Datum ball

Convenience

Operator convenience and work efficiency have been improved with adoption of various convenient control functions and ergonomic design.

Operating Console

1.
10.4" Color TFT LCD Monitor

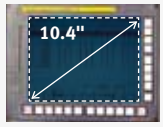

2.
Membrane Keyboard

3.
Portable MPG

LCD Portable MPG Handle
option

4.
Hot Key

5.
Swiveling Operation Panel
The operation panel can swivel up to 100° improving user convenience.

Convenient Absolute Feed

The current position of the machine is stored and maintained using battery power. Zero point return is not necessary after a power cycle.

System Condition Indicator

Warning lamp
Reports abnormal operating condition of the machine

Work completion indicator
Indicates that the work is finished

In-progress lamp
Indicates that the work is being carried out

LED Indoor Work Light

LED lamp provides higher brightness and longer life with reduced energy consumption.

Easy Operation Package (E.O.P)

These Doosan software packages have been customized to provide fast and easy setup of tooling, workpiece, and program. These functions minimize the idle time caused by process setup and maximize the machine's productivity.

Adaptive Feed Control (AFC)

Function to control feedrate so that the cutting can be carried out at a constant load
(To adapt to the spindle load set up with constant load feedrate control function)

Tool Management

Function to manage tool information
[Tool information]
- Tool No. / Tool name
- Tool condition : normal, large diameter, worn/damaged, used for the first time, manual

Tool Load Monitor

Function to automatically monitor tool load
(Different loads can be set for one tool according to M700 ~ M704)

Pattern Cycle & Engraving

Function to create frequently-used cutting programs automatically
- Pattern Cycle: creates a program for a pre-defined shape
- Engraving: creates a program for cutting a shape described with characters option

Work Offset Setting

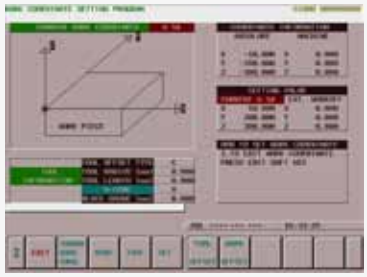

Function to configure various work offset settings

Alarm Guidance

Function to show detailed info on frequently triggered alarms and recommended actions

Sensor Status Monitor

Function to view sensor conditions of the machine

ATC Recovery

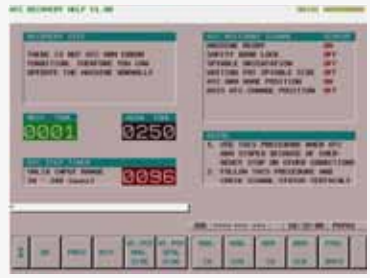

Function to view detailed info with recommended actions and to perform step-by-step operation manually
(when an alarm is triggered during an ATC operation)

Spindle

Spindle Power – Torque Diagram

DNM 200/5AX & DNM 350/5AX

Max. spindle speed : 12000 r/min
Spindle motor power : 18.5 / 11 kW (24.8 / 14.8 Hp)

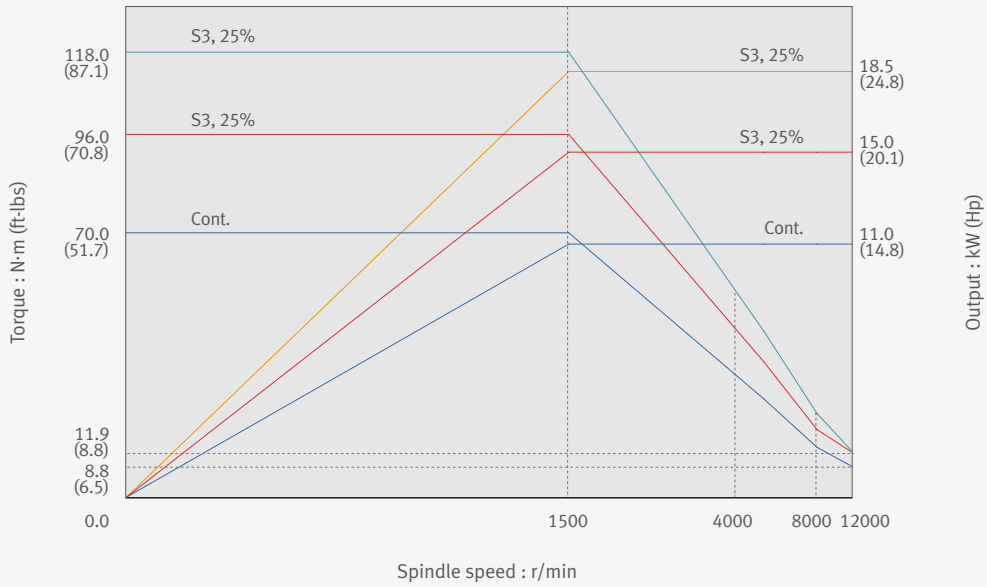

DNM 350/5AX

Max. spindle speed : 20000 r/min option (Only DNM 350/5AX)
Spindle motor power : 22 / 11 kW (29.5 / 14.8 Hp)

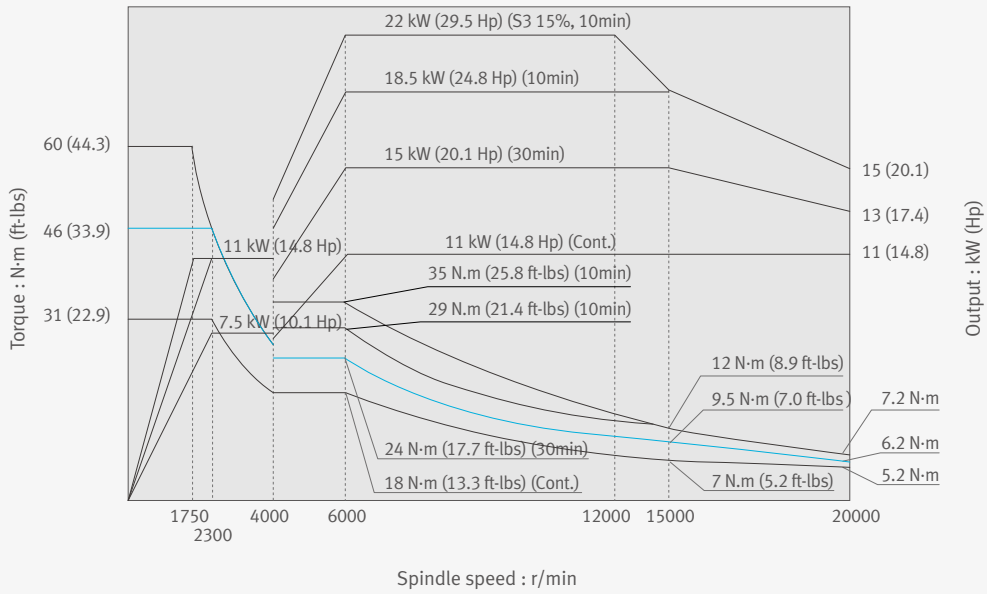

External Dimensions

DNM 200/5AX

Unit: mm (inch)

Top View

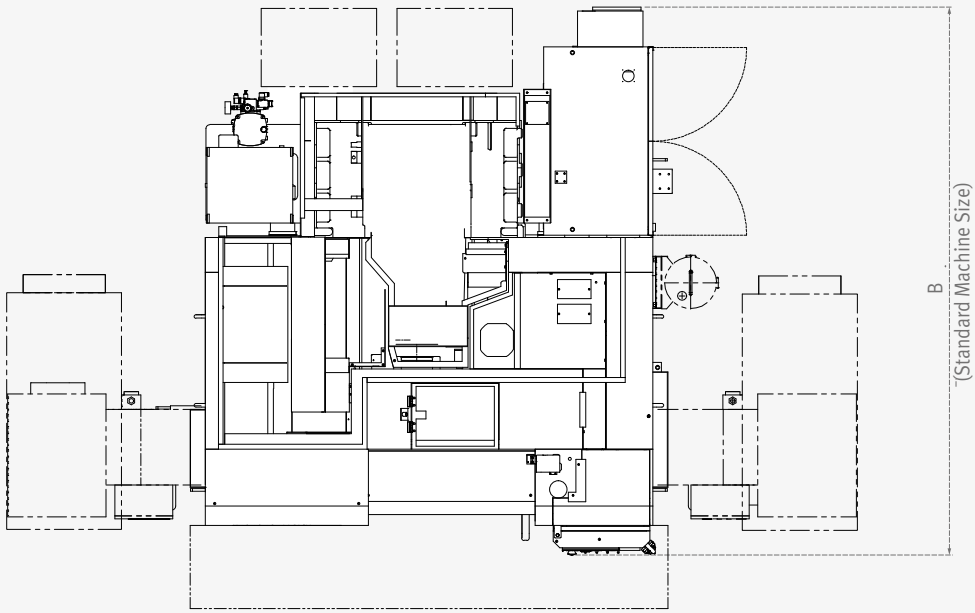

Front View

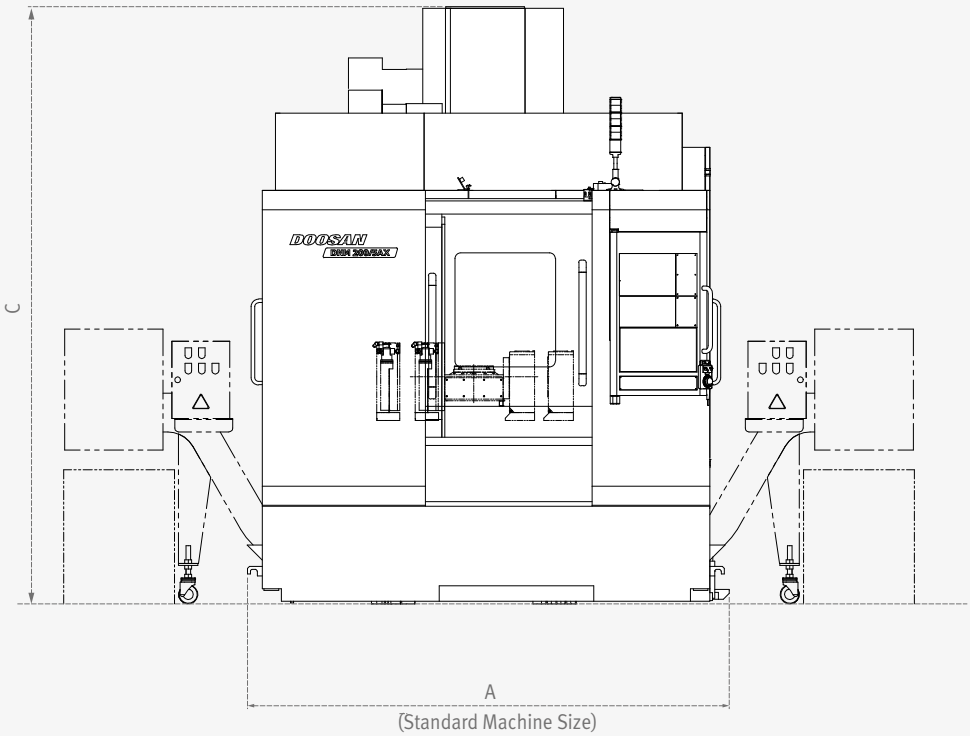

Model	A [with Chip Conveyor]	B	C
DNM 200/5AX	2490 [3447] (98.0 [135.7])	2835 (111.6)	3091 (121.7)
DNM 350/5AX	3150 [4085] (124.0 [160.8])	3209 (126.3)	3190 (125.6)

Table dimension

DNM 200/5AX

Unit: mm (inch)

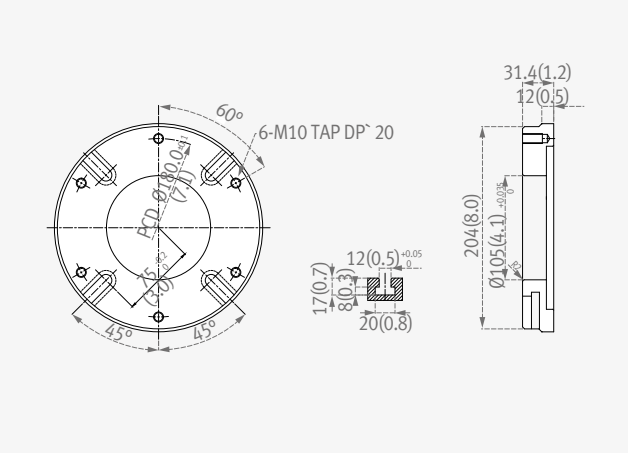

DNM 350/5AX

Unit: mm (inch)

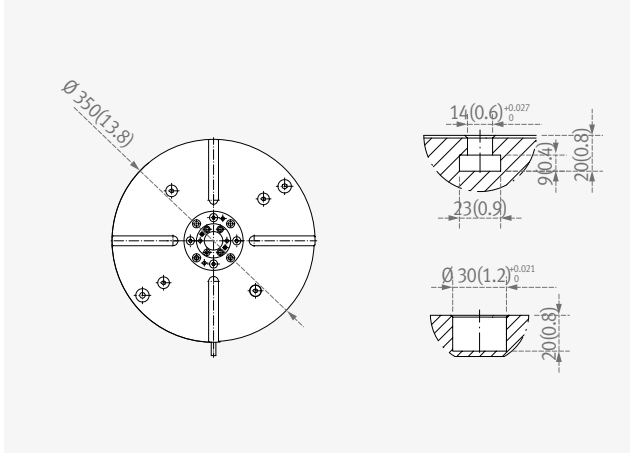

Machining Area

DNM 200/5AX

Unit: mm (inch)

A AXIS 0° FRONT VIEW

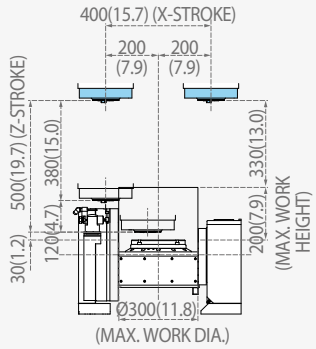

A AXIS 90° RIGHT VIEW

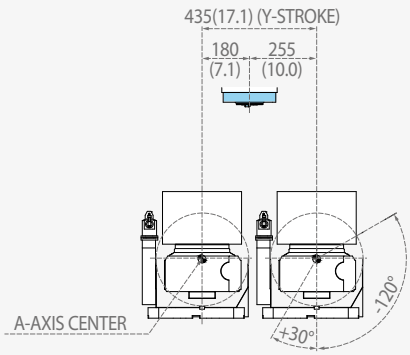

DNM 350/5AX

Unit: mm (inch)

A AXIS 0° FRONT VIEW

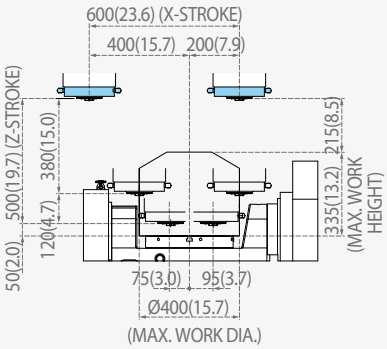

A AXIS 90° RIGHT VIEW

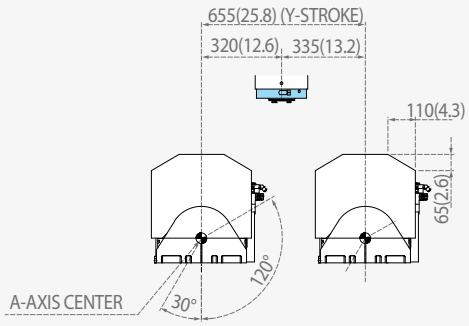

Machine Specifications

DNM 5AX
series

Description			Unit	DNM 200/5AX	DNM 350/5AX
Travel	Travel distance	X	mm (inch)	400 (15.7)	600 (23.6)
		Y	mm (inch)	435(+180, -255) (17.1 (+7.1, -10.0))	655 (25.8)
		Z	mm (inch)	500 (19.7)	
		A	deg	150 (+30 ~ -120)	
		C	deg	360	
	Distance from spindle nose to table top		mm (inch)	30 ~ 530 (1.2 ~ 20.9)	50 ~ 550 (2.0 ~ 21.7)
Feedrate	Rapid traverse rate	X	m/min (ipm)	36 (1417.3)	
		Y	m/min (ipm)	36 (1417.3)	
		Z	m/min (ipm)	30 (1181.1)	
		A	r/min	20	
		C	r/min	30	
	Cutting feedrate	X, Y, Z	m/min (ipm)	15000 (590.6)	
		A, C	deg/min	7200	
Table	Table size		mm (inch)	Ø200 (7.9)	Ø350 (13.8)
	Table loading capacity		kg (lb)	40 (88.2) (Horizontal) / 60 (132.3) (Vertical)	250 (551.1)
	Table type		-	T-SLOT (12H8)	T-SLOT (14H8)
Spindle	Max. spindle speed		r/min	12000	12000 (20000)
	Spindle taper		-	ISO #40, 7/24 TAPER	
	Max. spindle torque		N·m (ft-lbs)	117 (86.3)	117 { 167 / 60 } (86.3 {123.2 / 44.3})
Automatic tool changer	Type of tool shank		-	MAS403 BT 40	
			-	{ CAT 40 }	
			-	{ DIN 69871-A40 }	
	Tool storage capacity		ea	30 { 40 }	30 { 40, 60 }
	Max. tool diameter (Continuous)		mm (inch)	30 Tools : 80 / 40 Tools : 76	
	Max. tool diameter (Near port empty)		mm (inch)	30 Tools : 125 / 40 Tools : 125	
	Max. tool length		mm (inch)	300 (11.8)	Ø80 : 270 / Ø125 : 210 (3.15 : 10.6 / 4.9 : 8.3)
	Max. tool weight		kg (lb)	8 (17.6)	
	Method of tool selection		-	Memory Random	
	Tool change time (tool-to-tool)		s	1.3	
	Tool change time (chip-to-chip)		s	3.7	
Motor	Spindle motor power		kW (Hp)	18.5 / 11 (24.8 / 14.8)	18.5 / 11 (22 / 18.5 or 22 / 11) (24.8 / 14.8 (29.5 / 24.8 or 29.5 / 14.8))
	Coolant pump motor power		kW (Hp)	0.25 (0.3)	0.4 (0.5)
Power source	Electric power supply		kVA	31.3	40.6 (45.7)
	Compressed air supply		Mpa (psi)	0.54 (78.3)	
Tank capacity	Coolant pump capacity		L (galon)	5.5 (1.5)	13 (3.4)
	Lubrication tank capacity		L (galon)	3.1 (0.8)	
Machine size	Height		mm (inch)	3091 (121.7)	3190 (125.6)
	Length		mm (inch)	2835 (111.6)	3209 (126.3)
	Width		mm (inch)	2490 (98.0)	3150 (124.0)
	Weight		kg (lb)	5500 (4059.0)	8500 (6273.0)
NC System			-	DOOSAN FANUC i	DOOSAN FANUC i / FANUC 31i-5 / HEIDENHAIN

NC Unit Specifications

FANUC

● Standard ○ Optional X N/A

No.	Division	Item	Spec.	DOOSAN FANUC i	FANUC 31i-5
1	AXES CONTROL	Controlled axes	3 (X,Y,Z)	X,Y,Z,C,A	X,Y,Z,C,A
2		Additional controlled axes	5 axes in total	●	●
3		Least command increment	0.001 mm / 0.0001"	●	●
4		Least input increment	0.001 mm / 0.0001"	○	●
5		Interpolation type pitch error compensation		○	○
6	INTERPOLATION & FEED FUNCTION	2nd reference point return	G30	●	●
7		3rd / 4th reference return		●	●
8		Inverse time feed		●	○
9		Cylinderical interpolation	G07.1	●	○
10		Helical interpolation B	Only Fanuc 30i	-	○
11		Smooth interpolation		-	○
12		NURBS interpolation		-	○
13		Involute interpolation		-	○
14		Helical involute interpolation		-	○
15		Bell-type acceleration/deceleration before look ahead interpolation		●	●
16		Smooth backlash compensation		○	●
17		Automatic corner override	G62	●	○
18		Manual handle feed	Max. 3unit	1 unit	1 unit
19		Manual handle feed rate	x1, x10, x100 (per pulse)	●	●
20		Handle interruption		●	○
21		Manual handle retrace		○	○
22		Manual handle feed 2/3 unit		-	○
23		Nano smoothing	AI contour control II is required.	○	●
24		AICC II	200 BLOCK	●	●
25		AICC II	400 BLOCK	-	○
26		High-speed processing	600 BLOCK	-	○
27		Look-ahead blocks expansion	1000 BLOCK	-	○
28		DSQ I	AICC II (200block) + Machining condition selection function	-	●
29		DSQ II	AICC II (200block) + Machining condition selection function + Data server(1GB)	-	○
30		DSQ III	AICC II with high speed processing (600block) + Machining condition selection function + Data server (1GB)	-	○
31	SPINDLE & M-CODE FUNCTION	M- code function		●	●
32		Retraction for rigid tapping		●	●
33		Rigid tapping	G84, G74	●	●
34	TOOL FUNCTION	Number of tool offsets	64 ea	-	64 ea
35		Number of tool offsets	99 / 200 ea	-	○
36		Number of tool offsets	400 ea	400 ea	○
37		Number of tool offsets	499 / 999 / 2000 ea	-	○
38		Tool nose radius compensation	G40, G41, G42	●	●
39		Tool length compensation	G43, G44, G49	●	●
40		Tool life management		●	●
41		Addition of tool pairs for tool life management		●	○
42		Tool offset	G45 - G48	●	○
43	PROGRAMMING & EDITING FUNCTION	Custom macro		●	●
44		Macro executor		●	●
45		Extended part program editing		●	●
46		Part program storage	256KB(640m)	-	640m
47		Part program storage	512KB (1,280m)	1280m	○
48		Part program storage	1MB (2,560m)	-	○
49		Part program storage	2MB (5,120m)	○	○
50		Part program storage	4MB (1,0240m)	-	○
51		Part program storage	8MB (2,0480m)	-	○
52		Inch/metric conversion	G20 / G21	●	●
53		Number of Registered programs	400 ea	400 ea	-
54		Number of Registered programs	500 ea	-	500 ea
55		Number of Registered programs	1000 / 4000 ea	-	○
56		Optional block skip	9 BLOCK	●	○
57		Optional stop	M01	●	●
58		Program file name	32 characters	-	●
59		Program number	O4-digits	●	-
60		Playback function		●	○
61		Addition of workpiece coordinate system	G54.1 P1 - 48 (48 pairs)	48 pairs	48 pairs
62		Addition of workpiece coordinate system	G54.1 P1 - 300 (300 pairs)	-	○
63	OTHERS FUNCTIONS (Operation, setting & Display, etc)	Embeded Ethernet		●	●
64		Graphic display	Tool path drawing	●	●
65		Loadmeter display		●	●
66		Memory card interface		●	●
67		USB memory interface	Only Data Read & Write	●	●
68		Operation history display		●	●
69		DNC operation with memory card		●	●
70		Optional angle chamfering / corner R		●	●
71		Run hour and part number display		●	●
72		High speed skip function		●	○
73		Polar coordinate command	G15 / G16	●	○
74		Polar coordinate interpolation	G12.1 / G13.1	-	○
75		Programmable mirror image	G50.1 / G51.1	●	○
76		Scaling	G50, G51	●	○
77		Single direction positioning	G60	●	○
78		Pattern data input		●	○

NC Unit Specifications

HEIDENHAIN

● Standard ○ Optional X N/A

NO.	Division	Item	Spec.	iTNC 530
1	Axes	Controlled axes	3 axes / 4 axes /5 axes	X
2		Least command increment	0.0001 mm (0.0001 inch), 0.0001°	X
3		Least input increment	0.0001 mm (0.0001 inch), 0.0001°	X, Y, Z, C, A
4		Maximum commandable value	±99999.999mm (±3937 inch)	●
5		MDI / DISPLAY unit	15.1 inch TFT color flat panel	●
6		Program memory for NC programs	SSDR	●
7		Block processing time		●
8		Cycle time for path interpolation	CC 61xx	21GB
9		Encoders	Absolute encoders	0.5 ms
10	Commissioning and diagnostics	Data interfaces	Ethernet interface	3 ms
11			USB interface (USB 2.0)	EnDat 2.2
12	Machine functions	Look-ahead	Intelligent path control by calculating the path speed ahead of time (max. 1024 blocks.)	●
13		HSC filters		●
14		Switching the traverse ranges		●
15	User functions	Program input	According to ISO	●
16			With smarT.NC	●
17		Position entry	Nominal positions for lines and arcs in Cartesian coordinates	●
18			Incremental or absolute dimensions	●
19			Display and entry in mm or inches	●
20			Display of the handwheel path during machining with handwheel superimpositioning	●
21			Paraxial positioning blocks	●
22		Tool compensation	In the working plane and tool length	●
23			Radius-compensated contour lookahead for up to 99 blocks (M120)	●
24			Three-dimensional tool radius compensation	●
25		Tool table	Central storage of tool data	●
26			Multiple tool tables with any number of tools	●
27		Cutting-data table	Calculation of spindle speed and feed rate based on stored tables	●
28		Constant contouring speed	relative to the path of the tool center or to the tool's cutting edge	●
29		Parallel operation	Creation of a program while another program is being run	●
30		Tilting the working plane with Cycle 19		●
31		Tilting the working plane with the PLANE function		●
32		Manual traverse in tool-axis direction	after interruption of program run	●
33		Function TCPM	Retaining the position of tool tip when positioning tilting axes	●
34		Rotary table machining	Programming of cylindrical contours as if in two axes	●
35			Feed rate in distance per minute	●
36		FK free contour programming	for workpieces not dimensioned for NC programming	●
37		Program jumps	Subprograms and program section repeats	●
38			Calling any program as a subprogram	●
39		Program verification graphics	Plan view, view in three planes, 3-D view	●
40		Programming graphics	3-D line graphics	●
41		Program-run graphics	(plan view, view in three planes,3-D view)	●
42		Datum tables	Saving of workpiece-specific datums	●
43		Preset table	Saving of reference points	●
44		Freely definable table	after interruption of program run	●
45		Returning to the contour	With mid-program startup	●
46			After program interruption (with the GOTO key)	●
47		Autostart		●
48		Actual position capture		●
49		Enhanced file management		●
50		Context-sensitive help for error messages		●
51		TNCguide	Browser-based, context-sensitive helpsystem	●
52		Calculator		●
53		Entry of text and special characters		●
54		Comment blocks in NC program		●
55		"Save As" function		●
56		Structure blocks in NC program		●
57		Entry of feed rates	FU (feed per revolution)	●
58			FZ (tooth feed per revolution)	●
59			FT (time in seconds for path)	●
60			FMAXT (only for rapid traverse pot: time in seconds for path)	●
61	Fixed cycles	Working plane	Cycle 19	●
62		Cylinder surface	Cycle 27	●
63		Cylinder surface slot milling	Cycle 28	●
64		Cylinder surface ridge milling	Cycle 29	●
65	Cycles for automatic workpiece inspection	Calibrate TS		●
66		Calibrate TS length		●
67		Measure axis shift		●
68	Options	Software option 1		●
69		Rotary table machining	Programming of cylindrical contours as if in two axes	
70			Feed rate in mm/min	
71		Coordinate transformation	Tilting the working plane, PLANE function	
72		Interpolation	Circular in 3 axes with tilted working plane	
73		Software option 2		●
74		3-D machining	3-D tool compensation through surface normal vectors	
75			Tool center point management (TCPM)	
76			Keeping the tool normal to the contour	
77			Tool radius compensation normal to the tool direction	
78		Interpolation	Line in 5 axes (subject to export permit)	
79			Spline: execution of splines (3rd degree polynomial)	

Responding to Customers Anytime, Anywhere

Global Service Support Network

Corporations	Dealer Networks	Technical Centers	Factories
5	122	18	3

Technical Center: Sales Support, Service Support, Parts Support

Doosan Machine Tools' Global Network, Responding to Customer's Needs nearby, Anytime, Anywhere

Doosan machine tools provides a system-based professional support service before and after the machine tool sale by responding quickly and efficiently to customers' demands.
By supplying spare parts, product training, field service and technical support, we can provide top class support to our customers around the world.

Domestic Service Support Network

Integrated Support Centers	Sales Branch Offices	Post-Sales Service Centers	Designated Repair Service Centers
2	7	6	31

Customer Support Service

We help customers to achieve success by providing a variety of professional services from pre-sales consultancy to post-sales support.

Supplying Parts

- Supplying a wide range of original Doosan spare parts
- Parts repair service

Field Services

- On site service
- Machine installation and testing
- Scheduled preventive maintenance
- Machine repair

Technical Support

- Supports machining methods and technology
- Responds to technical queries
- Provides technical consultancy

Training

- Programming / machine setup and operation
- Electrical and mechanical maintenance
- Applications engineering

Major Specifications

DNM 5AX series

Description	UNIT	DNM 200/5AX	DNM 350/5AX
Max. spindle speed	r/min	12000	12000
Spindle motor power	kW (Hp)	18.5 / 11 (24.8 / 14.8)	
Tool shank	Taper	ISO #40, 7/24 TAPER	
Travels (X, Y, Z)	mm (inch)	400 / 435 / 500 (15.8 / 17.1 / 19.7)	600 / 655 / 500 (23.6 / 25.8 / 19.7)
Number of tools	ea	30	
Table size	mm (inch)	Ø200 (Ø7.9)	Ø350 (Ø13.8)
Travels (A, C)	deg	150 / 360	
NC system	-	DOOSAN-FANUC i	FANUC / HEIDENHAIN

Doosan Machine Tools

http://www.doosanmachinetools.com
www.facebook.com/doosanmachinetools

Optimal Solutions for the Future

Head Office
Yeonkang Bldg., 6th FL., 270, Yeonji-dong, Jongno-gu, Seoul, Korea
Tel +82-2-3670-5345 / 5362
Fax +82-2-3670-5382

Doosan Machine Tools China
Room 101,201,301, Building 39 Xinzhuan Highway No.258 Songjiang District,China Shanghai(201612)
Tel +86 21-5445-1155
Fax +86 21-6405-1472

Doosan Machine Tools Japan
#2412, Mita Kokusai Bldg. 1-4-28 Mita, Minato-ku, Tokyo 108-0073, Japan
Tel +81 3 5730 9013
Fax +81 3 5730 9016

Doosan Machine Tools America
19A Chapin Rd., Pine Brook, NJ 07058, U.S.A.
Tel +1-973-618-2500
Fax +1-973-618-2501

Doosan Machine Tools Europe
Emdener Strasse 24, D-41540 Dormagen, Germany
Tel +49-2133-5067-100
Fax +49-2133-5067-111

Doosan Machine Tools India
106 / 10-11-12, Amruthahalli, Byatarayanapura, Bellary road, Bangalore-560 092, India
Tel +91-80-4266-0122 / 121 / 100

* For more details, please contact Doosan Machine Tools.
* The specifications and information above-mentioned may be changed without prior notice.
* Doosan Machine Tools Co., Ltd. is a subsidiary of MBK Partners. The trademark DOOSAN is used under a licensing agreement with Doosan Corporation, the registered trademark holder.