A0 3145325

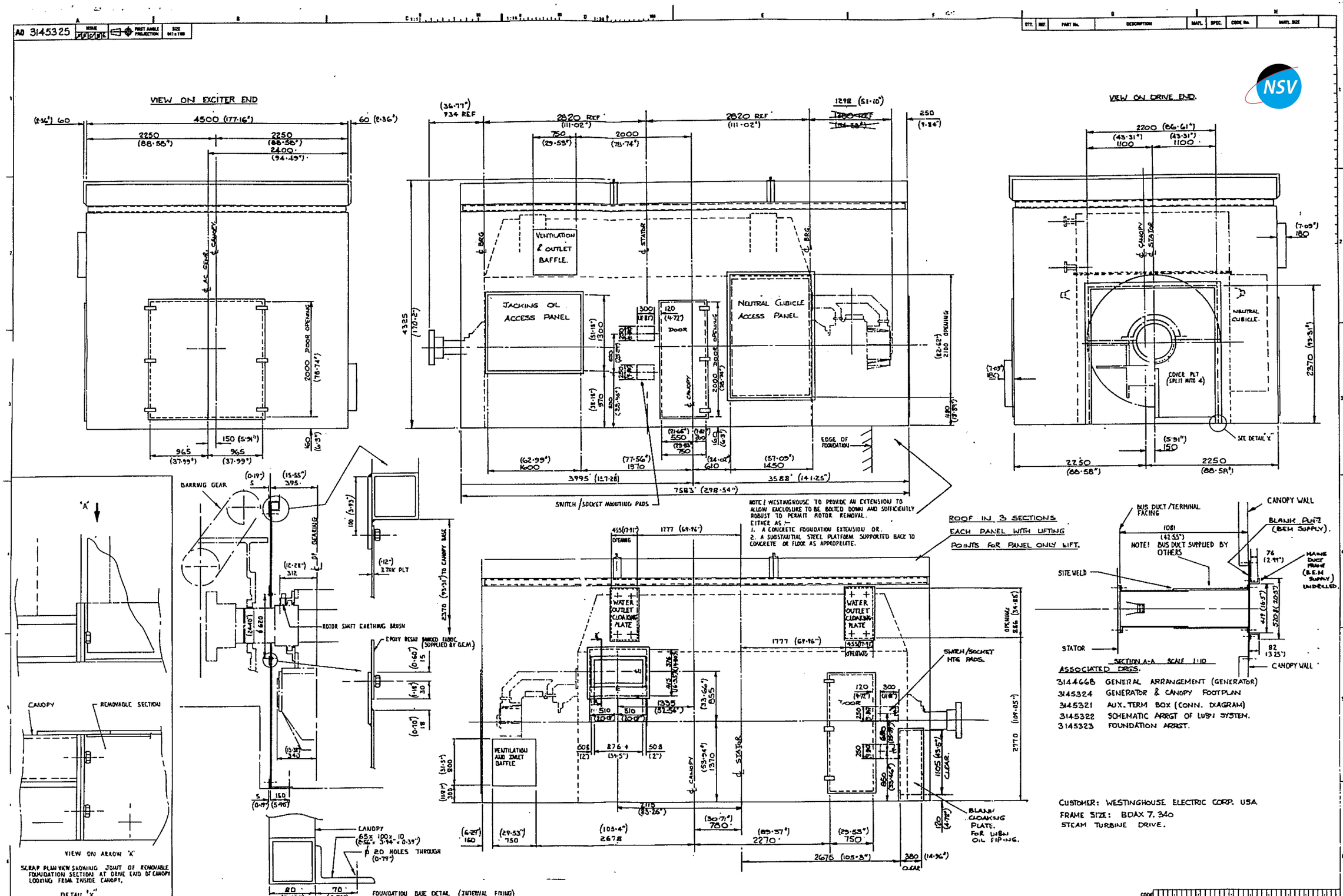
VIEW ON EXCITER END
VIEW ON DRIVE END.
VENTILATION & OUTLET BAFFLE.
JACKING OIL ACCESS PANEL
NEUTRAL CUBICLE ACCESS PANEL
DOOR
EDGE OF FOUNDATION
SWITCH/SOCKET MOUNTING PADS
NOTE: WESTINGHOUSE TO PROVIDE AN EXTENSION TO ALLOW ENCLOSURE TO BE BOLTED DOWN AND SUFFICIENTLY ROBUST TO PERMIT ROTOR REMOVAL.
EITHER AS:-
1. A CONCRETE FOUNDATION EXTENSION OR.
2. A SUBSTANTIAL STEEL PLATFORM SUPPORTED BACK TO CONCRETE OR FLOOR AS APPROPRIATE.
ROOF IN 3 SECTIONS
EACH PANEL WITH LIFTING POINTS FOR PANEL ONLY LIFT.
NEUTRAL CUBICLE.
COVER PLT (SPLIT INTO 4)
SEE DETAIL 'X'
BARRING GEAR
ROTOR SHAFT EARTHING BRUSH
EPOXY RESIN BANDED FABRIC (SUPPLIED BY B.E.M.)
CANOPY
REMOVABLE SECTION
VIEW ON ARROW 'A'
SCRAP PLAN VIEW SHOWING JOINT OF REMOVABLE FOUNDATION SECTION AT DRIVE END OF CANOPY LOOKING FROM INSIDE CANOPY.
DETAIL 'X'
FOUNDATION BASE DETAIL (INTERNAL FIXING)
WATER OUTLET CLOAKING PLATE
VENTILATION AND INLET BAFFLE
SWITCH/SOCKET MTG PADS.
BLANK CLOAKING PLATE. FOR LUBN OIL PIPING.
BUS DUCT/TERMINAL FACING
CANOPY WALL
BLANK PLT? (BEM SUPPLY).
NOTE! BUS DUCT SUPPLIED BY OTHERS
SITE WELD
STATOR
SECTION A-A SCALE 1:10
ASSOCIATED DRGS.
3144668 GENERAL ARRANGEMENT (GENERATOR)
3145324 GENERATOR & CANOPY FOOTPLAN
3145321 AUX. TERM BOX (CONN. DIAGRAM)
3145322 SCHEMATIC ARRGT OF LUBN SYSTEM.
3145323 FOUNDATION ARRGT.
CUSTOMER: WESTINGHOUSE ELECTRIC CORP. USA
FRAME SIZE: BDAX 7.340
STEAM TURBINE DRIVE.
ENCLOSURE GENERAL ARRGT.
A0 3145325

AD 314466B

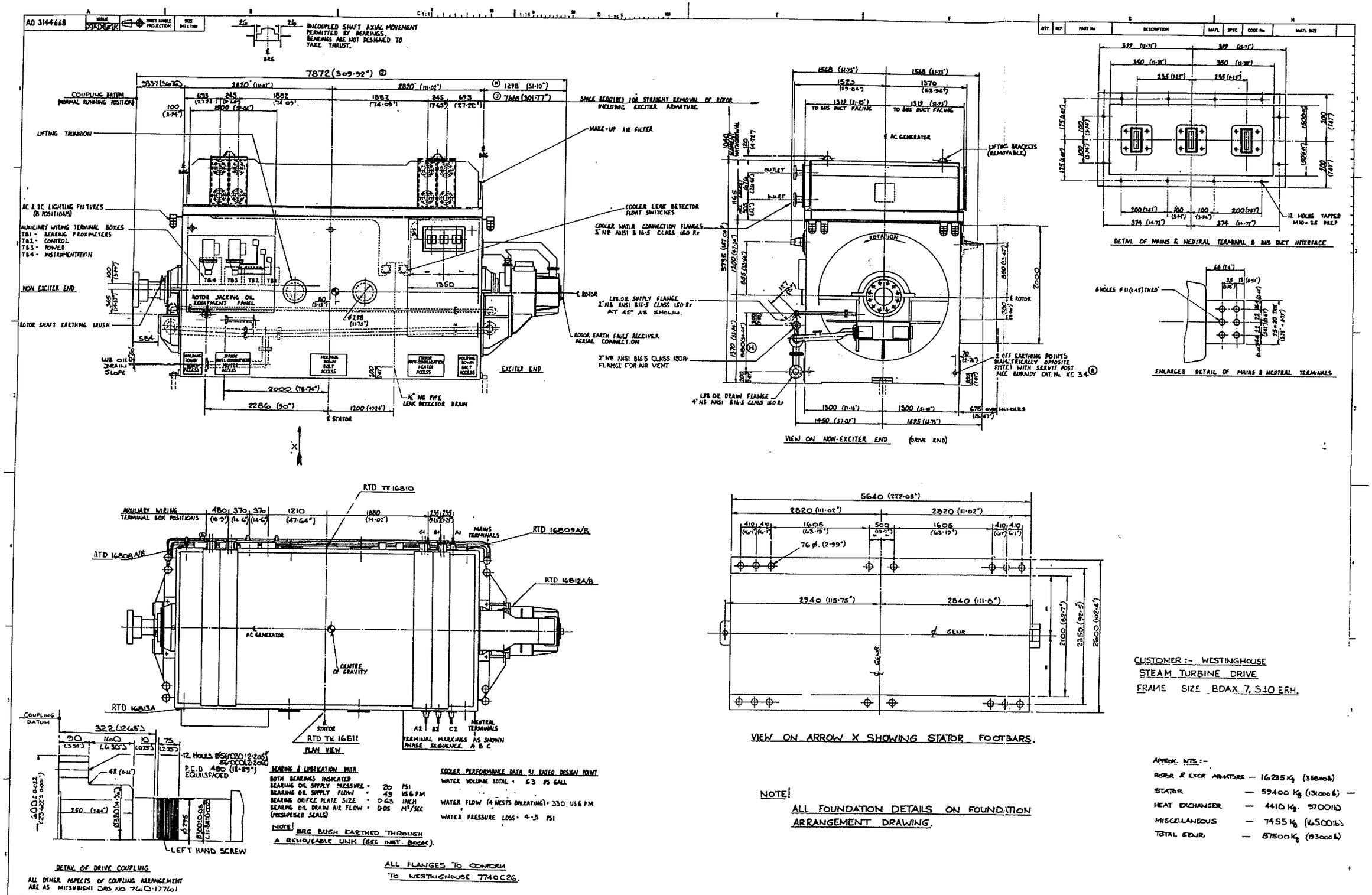
UNCOUPLED SHAFT AXIAL MOVEMENT PERMITTED BY BEARINGS. BEARINGS ARE NOT DESIGNED TO TAKE THRUST.
7872 (309.92")
COUPLING DATUM (NORMAL RUNNING POSITION)
SPACE REQUIRED FOR STRAIGHT REMOVAL OF ROTOR INCLUDING EXCITER ARMATURE
LIFTING TRUNNION
MAKE-UP AIR FILTER
AC & DC LIGHTING FIXTURES (8 POSITIONS)
AUXILIARY WIRING TERMINAL BOXES
TB1 - BEARING PROXIMETERS
TB2 - CONTROL
TB3 - POWER
TB4 - INSTRUMENTATION
COOLER LEAK DETECTOR FLOAT SWITCHES
COOLER WATER CONNECTION FLANGES 3" NB ANSI B 16.5 CLASS 150 RF
NON EXCITER END
ROTOR JACKING OIL EQUIPMENT PANEL
ROTOR SHAFT EARTHING BRUSH
LUB OIL DRAIN SLOPE
LUB. OIL SUPPLY FLANGE 2" NB ANSI B16.5 CLASS 150 RF AT 45° AS SHOWN.
ROTOR EARTH FAULT RECEIVER AXIAL CONNECTION
2" NB ANSI B16.5 CLASS 150 RF FLANGE FOR AIR VENT
LUB. OIL DRAIN FLANGE 4" NB ANSI B16.5 CLASS 150 RF
EXCITER END
½" NB PIPE LEAK DETECTOR DRAIN
2000 (78.74")
2286 (90")
1200 (47.24")
℄ STATOR
VIEW ON NON-EXCITER END (DRIVE END)
℄ AC GENERATOR
LIFTING BRACKETS (REMOVABLE)
TO BUS DUCT FACING
ROTATION
OUTLET
INLET
℄ ROTOR
2 OFF EARTHING POINTS MAGNETICALLY OPPOSITE FITTED WITH SERVIT POST REF. BURNDY CAT. No. KC 34
DETAIL OF MAINS & NEUTRAL TERMINAL & BUS DUCT INTERFACE
12 HOLES TAPPED M10 × 25 DEEP
6 HOLES Ø11 (0.43") THRU
ENLARGED DETAIL OF MAINS & NEUTRAL TERMINALS
AUXILIARY WIRING TERMINAL BOX POSITIONS
RTD TE 16810
RTD 16808A/B
RTD 16809A/B
RTD 16812A/B
RTD 16813A
MAINS TERMINALS
AC GENERATOR
CENTRE OF GRAVITY
℄ STATOR
RTD TE 16811
PLAN VIEW
A2 B2 C2 NEUTRAL TERMINALS
TERMINAL MARKINGS AS SHOWN PHASE SEQUENCE A B C
COUPLING DATUM
12 HOLES Ø56.000 (2.205") P.C.D 480 (18.89") EQUISPACED
LEFT HAND SCREW
DETAIL OF DRIVE COUPLING
ALL OTHER ASPECTS OF COUPLING ARRANGEMENT ARE AS MITSUBISHI DRG NO 760-17701
BEARING & LUBRICATION DATA
BOTH BEARINGS INSULATED
BEARING OIL SUPPLY PRESSURE 20 PSI
BEARING OIL SUPPLY FLOW 49 USG PM
BEARING ORIFICE PLATE SIZE 0.63 INCH
BEARING OIL DRAIN AIR FLOW 0.05 M³/SEC
(PRESSURISED SEALS)
NOTE! BRG BUSH EARTHED THROUGH A REMOVEABLE LINK (SEE INST. BOOK).
COOLER PERFORMANCE DATA AT RATED DESIGN POINT
WATER VOLUME TOTAL 63 US GALL
WATER FLOW (4 MESTS OPERATING) 330 USG PM
WATER PRESSURE LOSS 4.5 PSI
ALL FLANGES TO CONFORM TO WESTINGHOUSE 7740C26.
5640 (222.05")
2820 (111.02")
76 ø. (2.99")
2940 (115.75")
2840 (111.8")
℄ GEAR
2100 (82.7")
2350 (92.5")
2600 (102.4")
VIEW ON ARROW X SHOWING STATOR FOOTBARS.
NOTE!
ALL FOUNDATION DETAILS ON FOUNDATION ARRANGEMENT DRAWING.
CUSTOMER :- WESTINGHOUSE
STEAM TURBINE DRIVE
FRAME SIZE BDAX 7, 340 ERH.
APPROX. WTS :-
ROTOR & EXCR ARMATURE — 16235 Kg (35800 lb)
STATOR — 59400 Kg (131000 lb)
HEAT EXCHANGER — 4410 Kg. (9700 lb)
MISCELLANEOUS — 7455 Kg (16500 lb)
TOTAL GENR. — 87500 Kg (193000 lb)
EARTH SERVIT POSTS WAS KC 28
NEUTRAL CUBICLE ADDED
AIR VENT CONNECTED TO LUB OIL DRAIN
FOUNDATION DETAILS REVISED. FOOTBAR DETAILS ADDED
COOLER DETAIL ADDED. AXIAL MOVEMENT ADDED. COUPLING ON HOLD
REDRAWN WITH CUSTOMER MODIFICATIONS NEUTRAL TERMINALS REMOVED. COOLER WATER CONNECTIONS MANIFOLD CHANGED
MANUFACTURING TOL ±0.0 ±0.5 ±0.1
WELDING TO BS 5135
SURFACE TEXTURE TO BS 1134
BRUSH ELECTRICAL MACHINES LIMITED
LOUGHBOROUGH, ENGLAND
GENERAL ARRANGEMENT OF AC GENERATOR
AD 314466
STOWER