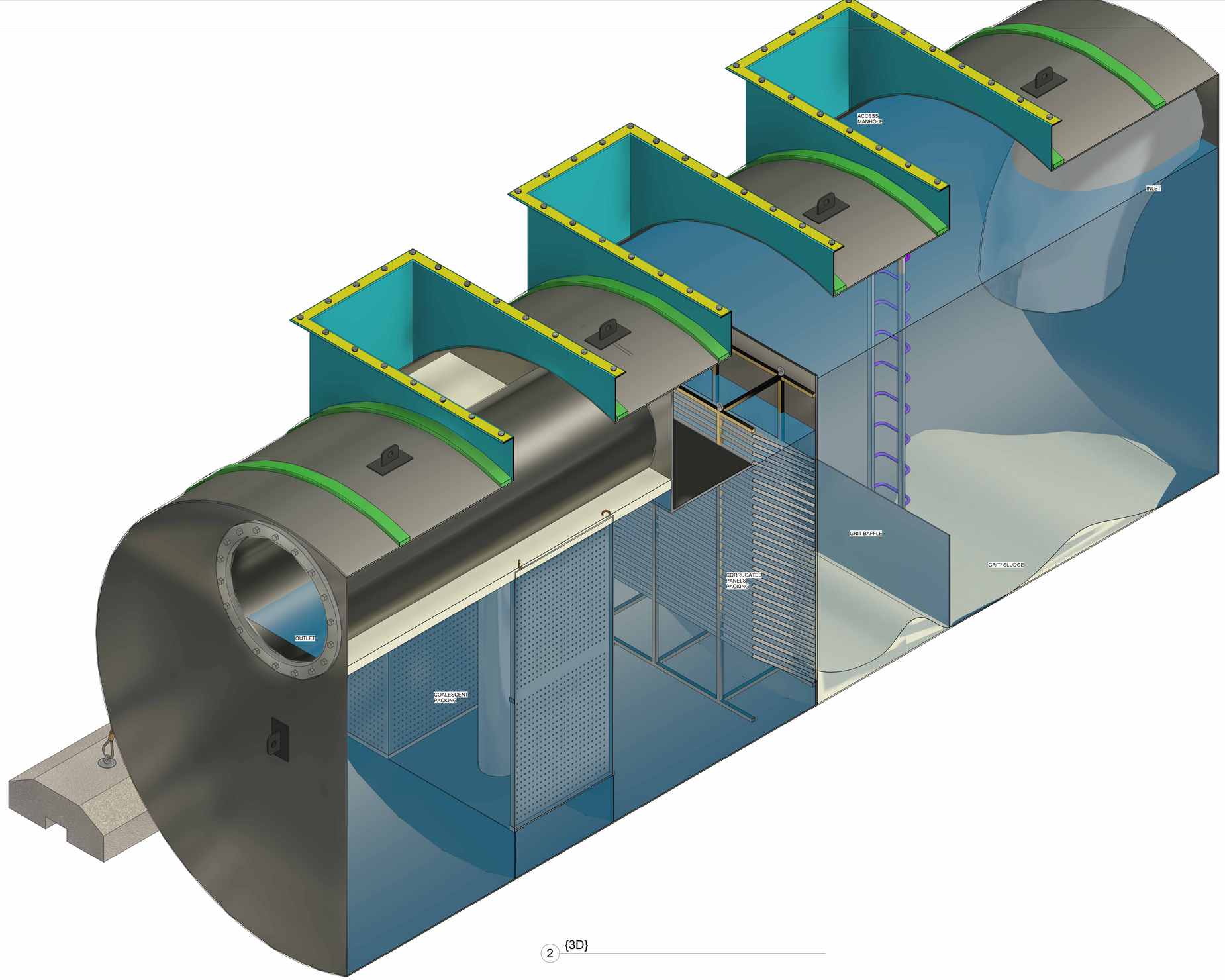

2 {3D}

CLIENT	PROGRAM CONSULTANT	CONTRACTOR	VENDOR
NEOM نيوم	PARSONS DESIGN CONSULTANT Jacobs	InfraRoad	basic contracting باسيق للمقاولات

REVISION HISTORY

No.	Date	Description

KEYPLAN

GENERAL NOTES

- ALL MEASUREMENT ARE IN METERS,UNLESS OTHERWISE SPECIFIED.
- ALL MANHOLES FINISH GRADE LEVELS ARE IN METERS, UNLESS OTHERWISE SPECIFIED.
- ALL PIPES INVERT LEVELS ARE IN MILLIMETERS, UNLESS OTHERWISE SPECIFIED.
- FOR OIL WATER SEPARATOR TREATED FLOW CAPACITY REFER TO OIL WATER SEPARATOR DESIGN REPORT # 1AI16080-080C01-RBU-RPT-CI-0007-03

LEGEND:

PROJECT NAME	352 OXAGON PORT TERMINAL
PROJECT DESCRIPTION	
BUILDING NAME	
BUILDING NUMBER	
PLOT NUMBER	
PROJECT STAGE	
DISCIPLINE	
SCALE	
DATE	Issue Date
DRAWN BY	Author
CHECKED BY	Checker
APPROVED BY	Approver

DRAWING TITLE

3D SECTION A101

PROGRAM CODE	PROJ. CONT. CODE	ORIG. CODE	VOL./ SYS.	BUILD. LEVEL	DOC. TYPE	DISCIPLINE	SERIES NO.	REV.

7/23/2023 10:59:32 AM

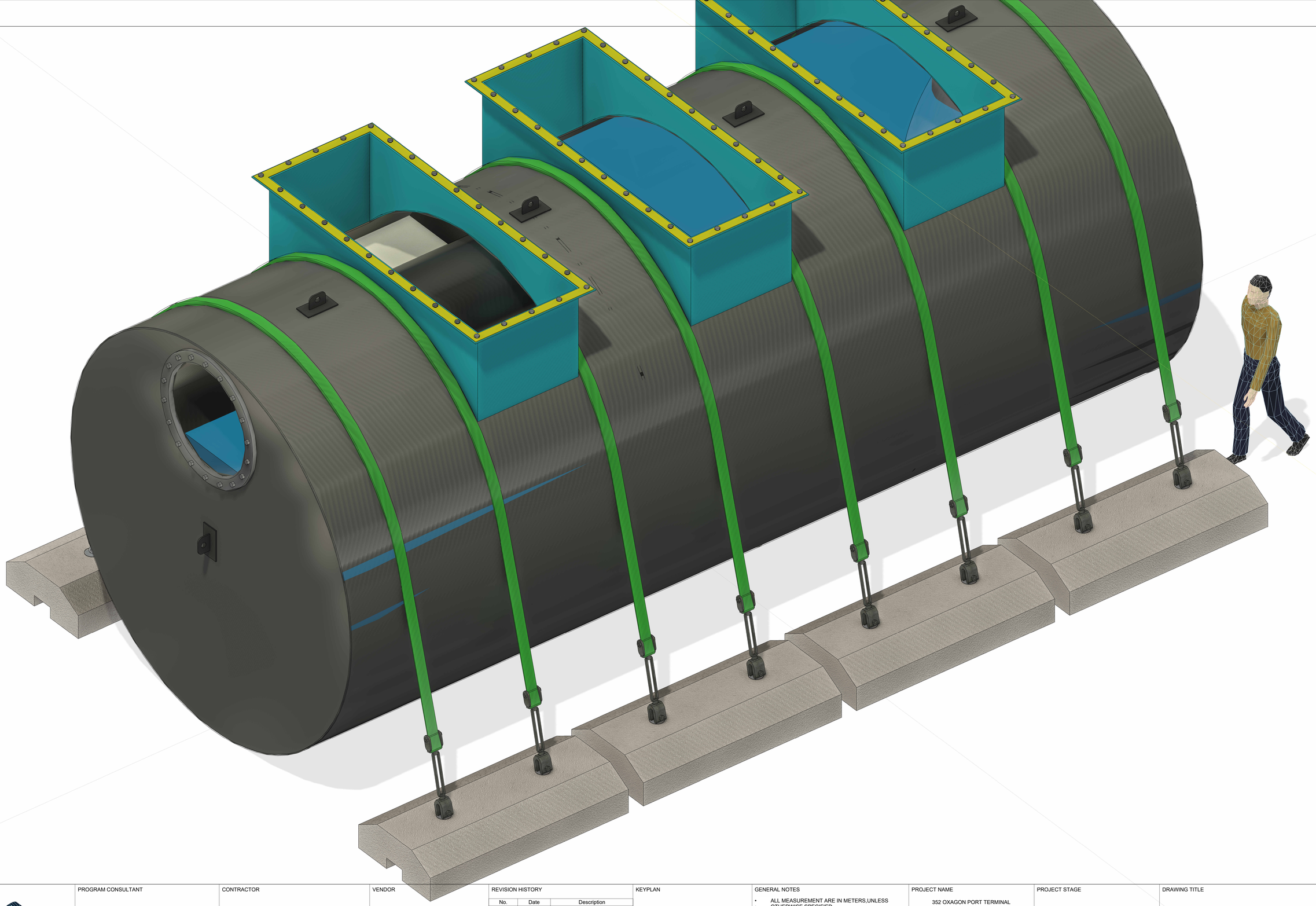

CLIENT

NEOM نيوم

PROGRAM CONSULTANT

PARSONS

DESIGN CONSULTANT

Jacobs

CONTRACTOR

InfraRoad

VENDOR

Basic Contracting باسيك للمقاولات

REVISION HISTORY

No.	Date	Description

KEYPLAN

GENERAL NOTES

- ALL MEASUREMENT ARE IN METERS,UNLESS OTHERWISE SPECIFIED.
- ALL MANHOLES FINISH GRADE LEVELS ARE IN METERS, UNLESS OTHERWISE SPECIFIED.
- ALL PIPES INVERT LEVELS ARE IN MILLIMETERS, UNLESS OTHERWISE SPECIFIED.
- FOR OIL WATER SEPARATOR TREATED FLOW CAPACITY REFER TO OIL WATER SEPARATOR DESIGN REPORT # 1AI16080-080C01-RBU-RPT-CI-0007-03

LEGEND:

PROJECT NAME

352 OXAGON PORT TERMINAL

PROJECT DESCRIPTION

BUILDING NAME

BUILDING NUMBER

PLOT NUMBER

PROJECT STAGE

DISCIPLINE

SCALE

DATE Issue Date

DRAWN BY Author

CHECKED BY Checker

APPROVED BY Approver

DRAWING TITLE

3D
A102

PROGRAM CODE	PROJ. CONT. CODE	ORIG. CODE	VOL./ SYS.	BUILD. LEVEL	DOC. TYPE	DISCIPLINE	SERIES NO.	REV.

7/23/2023 10:59:45 AM

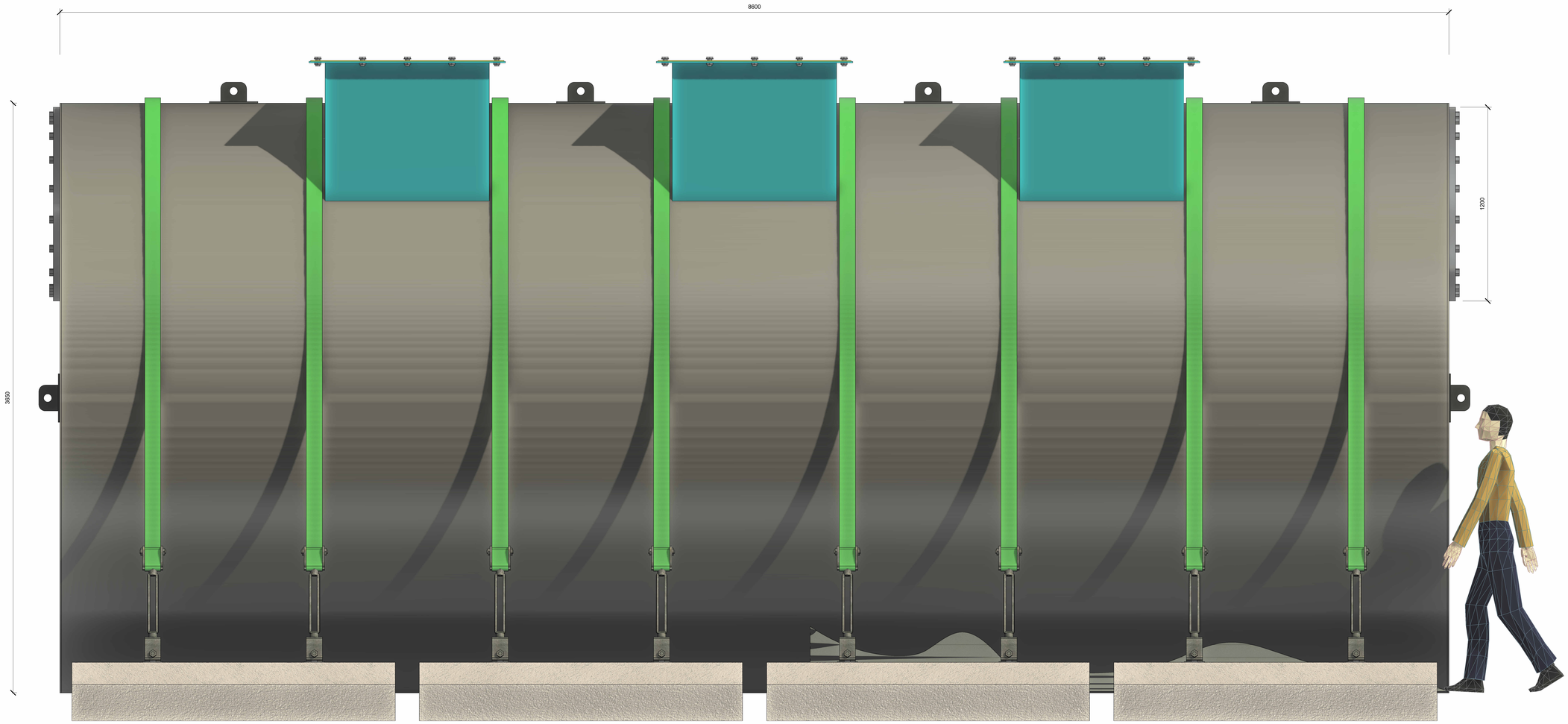

1 SIDE VIEW
1 : 10

CLIENT	PROGRAM CONSULTANT	CONTRACTOR	VENDOR	REVISION HISTORY	KEYPLAN	GENERAL NOTES	PROJECT NAME	PROJECT STAGE	DRAWING TITLE
NEOM نيوم	PARSONS DESIGN CONSULTANT Jacobs	InfraRoad	basic contracting باسيق للمقاولات	No. / Date / Description		• ALL MEASUREMENT ARE IN METERS,UNLESS OTHERWISE SPECIFIED. • ALL MANHOLES FINISH GRADE LEVELS ARE IN METERS, UNLESS OTHERWISE SPECIFIED. • ALL PIPES INVERT LEVELS ARE IN MILLIMETERS, UNLESS OTHERWISE SPECIFIED. • FOR OIL WATER SEPARATOR TREATED FLOW CAPACITY REFER TO OIL WATER SEPARATOR DESIGN REPORT # 1AI16080-080C01-RBU-RPT-CI-0007-03 LEGEND:	352 OXAGON PORT TERMINAL PROJECT DESCRIPTION BUILDING NAME BUILDING NUMBER PLOT NUMBER	DISCIPLINE SCALE 1 : 10 DATE Issue Date DRAWN BY Author CHECKED BY Checker APPROVED BY Approver	SIDE VIEW A103

PROGRAM CODE	PROJ. CONT. CODE	ORIG. CODE	VOL./ SYS.	BUILD. LEVEL	DOC. TYPE	DISCIPLINE	SERIES NO.	REV.

7/23/2023 10:59:59 AM

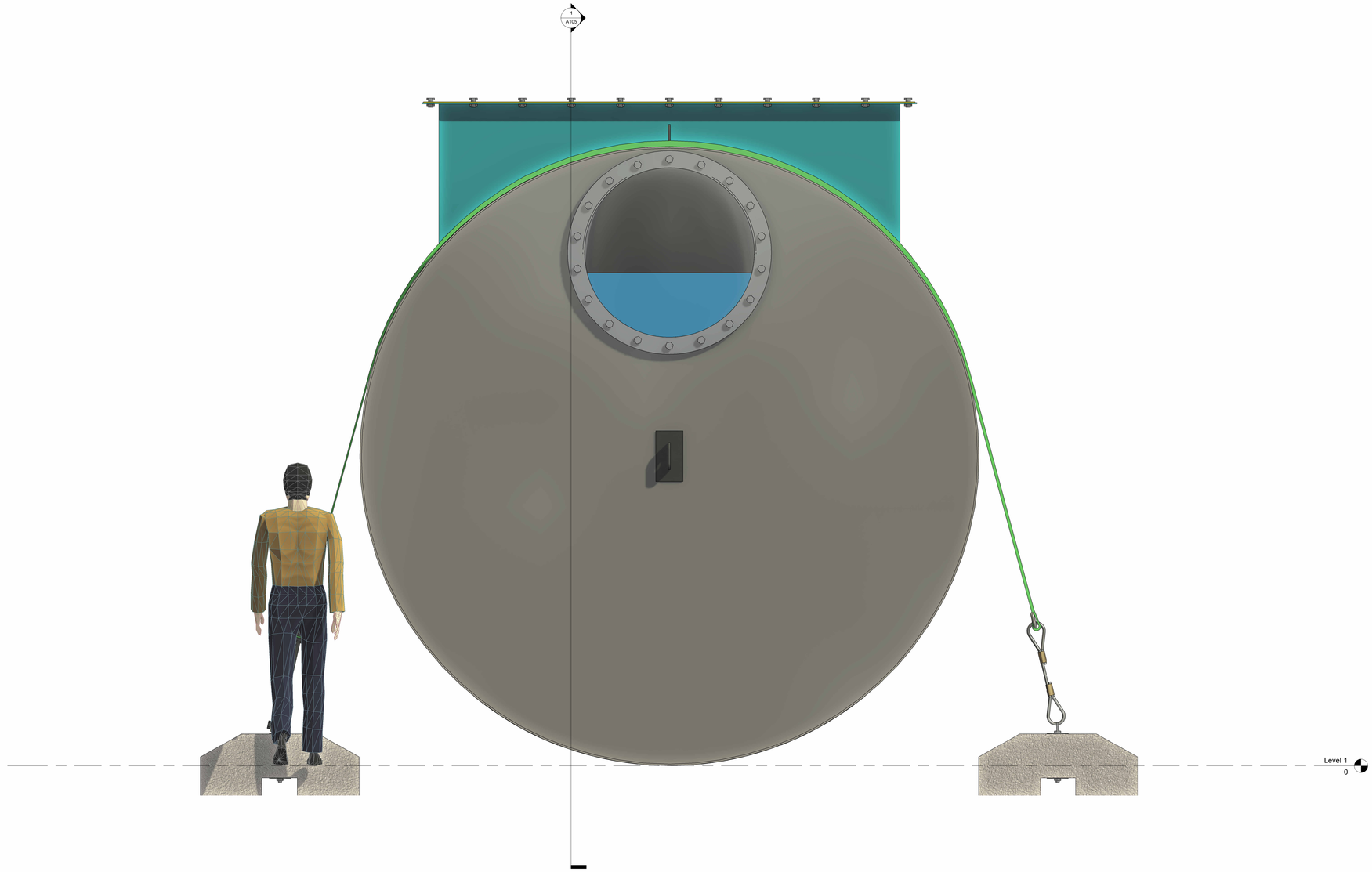

1 Front View
1 : 10

CLIENT

NEOM نيوم

PROGRAM CONSULTANT

PARSONS

DESIGN CONSULTANT

Jacobs

CONTRACTOR

InfraRoad

VENDOR

Basic Contracting
راسية للمقاولات

REVISION HISTORY

No.	Date	Description

KEYPLAN

GENERAL NOTES

- ALL MEASUREMENT ARE IN METERS,UNLESS OTHERWISE SPECIFIED.
- ALL MANHOLES FINISH GRADE LEVELS ARE IN METERS, UNLESS OTHERWISE SPECIFIED.
- ALL PIPES INVERT LEVELS ARE IN MILLIMETERS, UNLESS OTHERWISE SPECIFIED.
- FOR OIL WATER SEPARATOR TREATED FLOW CAPACITY REFER TO OIL WATER SEPARATOR DESIGN REPORT # 1AI16080-080C01-RBU-RPT-CI-0007-03

LEGEND:

PROJECT NAME
352 OXAGON PORT TERMINAL

PROJECT DESCRIPTION

BUILDING NAME

BUILDING NUMBER

PLOT NUMBER

PROJECT STAGE

DISCIPLINE

SCALE 1 : 10

DATE Issue Date

DRAWN BY Author

CHECKED BY Checker

APPROVED BY Approver

DRAWING TITLE

FRONT VIEW
A104

PROGRAM CODE	PROJ. CONT. CODE	ORIG. CODE	VOL./ SYS.	BUILD. LEVEL	DOC. TYPE	DISCIPLINE	SERIES NO.	REV.

7/23/2023 11:00:14 AM

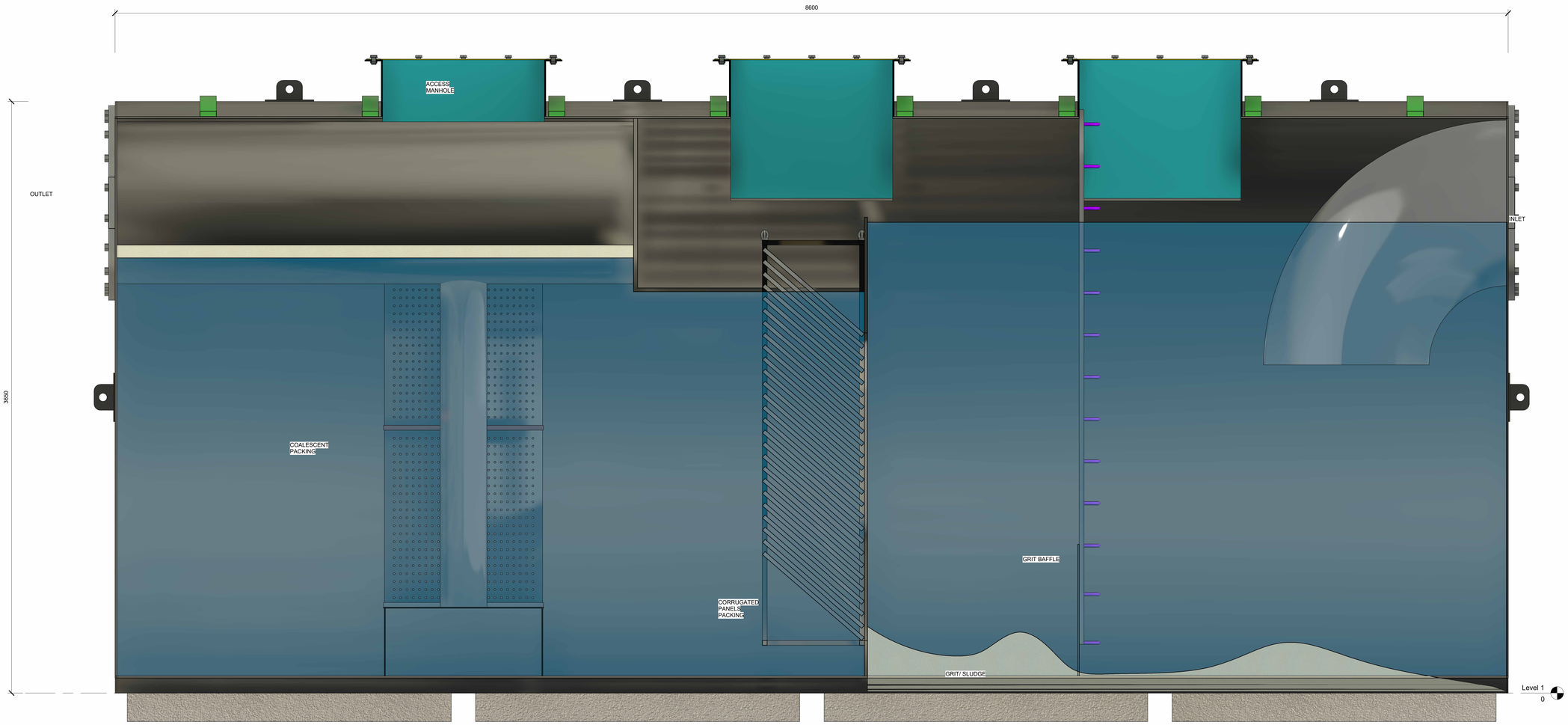

1 Section 1
1 : 10

CLIENT	PROGRAM CONSULTANT	CONTRACTOR	VENDOR	REVISION HISTORY	KEYPLAN	GENERAL NOTES	PROJECT NAME	PROJECT STAGE	DRAWING TITLE
NEOM نيوم	PARSONS DESIGN CONSULTANT Jacobs	InfraRoad	basic contracting شركة بي سي كونترايكت	No. / Date / Description		• ALL MEASUREMENT ARE IN METERS,UNLESS OTHERWISE SPECIFIED. • ALL MANHOLES FINISH GRADE LEVELS ARE IN METERS, UNLESS OTHERWISE SPECIFIED. • ALL PIPES INVERT LEVELS ARE IN MILLIMETERS, UNLESS OTHERWISE SPECIFIED. • FOR OIL WATER SEPARATOR TREATED FLOW CAPACITY REFER TO OIL WATER SEPARATOR DESIGN REPORT # 1AI16080-080C01-RBU-RPT-CI-0007-03 LEGEND:	352 OXAGON PORT TERMINAL		SECTION A105
							PROJECT DESCRIPTION	DISCIPLINE	
							BUILDING NAME	SCALE 1 : 10	
							BUILDING NUMBER	DATE Issue Date	
								DRAWN BY Author	
							PLOT NUMBER	CHECKED BY Checker	
								APPROVED BY Approver	

PROGRAM CODE	PROJ. CONT. CODE	ORIG. CODE	VOL./ SYS.	BUILD. LEVEL	DOC. TYPE	DISCIPLINE	SERIES NO.	REV.

7/23/2023 11:00:24 AM

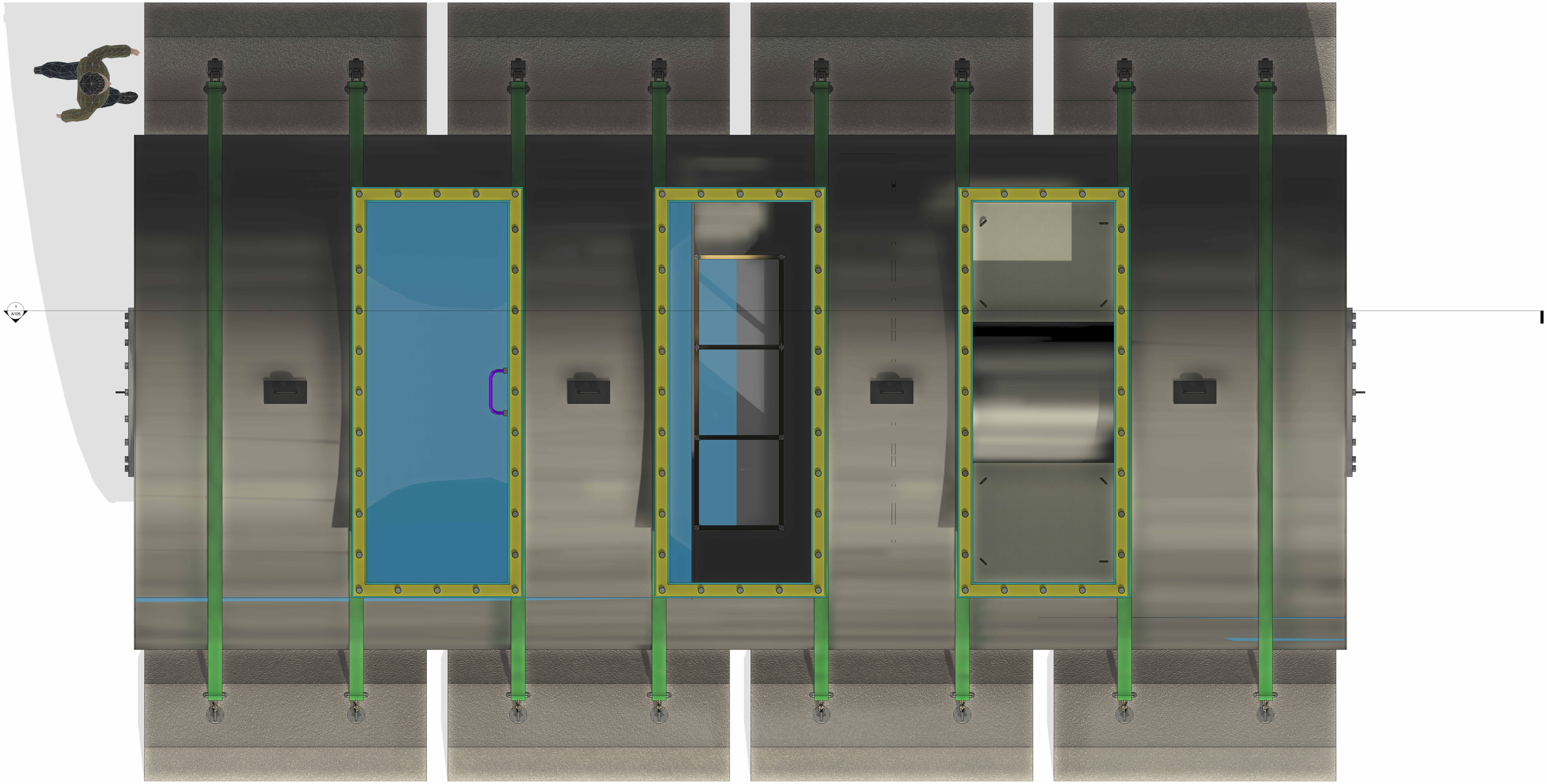

1 Site
1 : 10

CLIENT

NEOM نيوم

PROGRAM CONSULTANT

PARSONS

DESIGN CONSULTANT

Jacobs

CONTRACTOR

InfraRoad

VENDOR

basic contracting

REVISION HISTORY

No.	Date	Description

KEYPLAN

GENERAL NOTES

- ALL MEASUREMENT ARE IN METERS,UNLESS OTHERWISE SPECIFIED.
- ALL MANHOLES FINISH GRADE LEVELS ARE IN METERS, UNLESS OTHERWISE SPECIFIED.
- ALL PIPES INVERT LEVELS ARE IN MILLIMETERS, UNLESS OTHERWISE SPECIFIED.
- FOR OIL WATER SEPARATOR TREATED FLOW CAPACITY REFER TO OIL WATER SEPARATOR DESIGN REPORT # 1AI16080-080C01-RBU-RPT-CI-0007-03

LEGEND:

PROJECT NAME: 352 OXAGON PORT TERMINAL

PROJECT DESCRIPTION

BUILDING NAME

BUILDING NUMBER

PLOT NUMBER

PROJECT STAGE

DISCIPLINE

SCALE: 1 : 10

DATE: Issue Date

DRAWN BY: Author

CHECKED BY: Checker

APPROVED BY: Approver

DRAWING TITLE

TOP VIEW
A106

PROGRAM CODE	PROJ. CONT. CODE	ORIG. CODE	VOL./ SYS.	BUILD. LEVEL	DOC. TYPE	DISCIPLINE	SERIES NO.	REV.

7/23/2023 11:00:38 AM