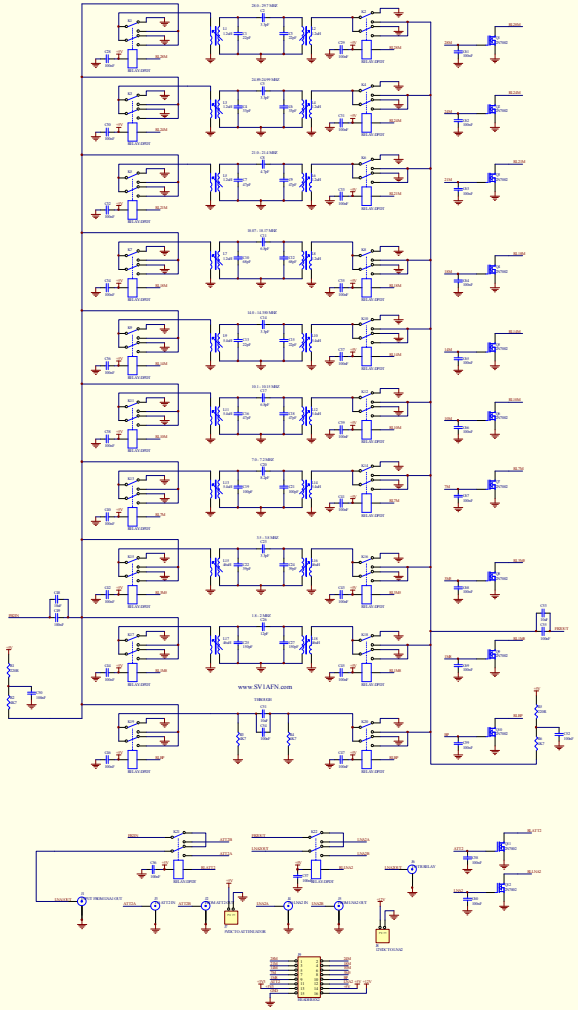
www.SV1AFN.com