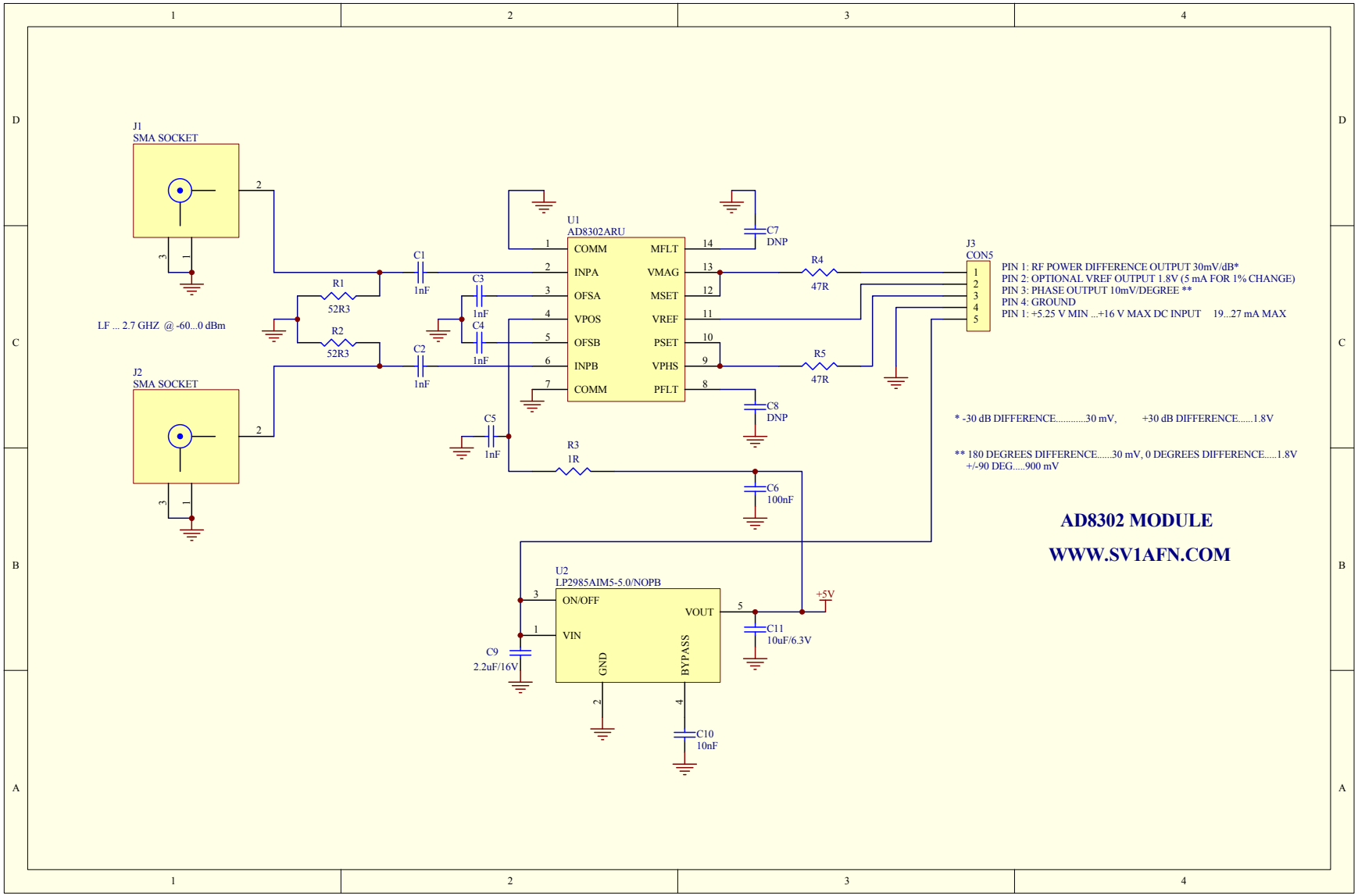
J1
SMA SOCKET
J2
SMA SOCKET
LF ... 2.7 GHZ @ -60...0 dBm
R1
52R3
R2
52R3
C1
1nF
C2
1nF
C3
1nF
C4
1nF
C5
1nF
R3
1R
C6
100nF
C7
DNP
C8
DNP
U1
AD8302ARU
COMM
INPA
OFSA
VPOS
OFSB
INPB
COMM
MFLT
VMAG
MSET
VREF
PSET
VPHS
PFLT
R4
47R
R5
47R
J3
CON5
PIN 1: RF POWER DIFFERENCE OUTPUT 30mV/dB*
PIN 2: OPTIONAL VREF OUTPUT 1.8V (5 mA FOR 1% CHANGE)
PIN 3: PHASE OUTPUT 10mV/DEGREE **
PIN 4: GROUND
PIN 1: +5.25 V MIN ...+16 V MAX DC INPUT 19...27 mA MAX
* -30 dB DIFFERENCE.....30 mV, +30 dB DIFFERENCE.....1.8V
** 180 DEGREES DIFFERENCE.....30 mV, 0 DEGREES DIFFERENCE.....1.8V
+/-90 DEG.....900 mV
AD8302 MODULE
WWW.SV1AFN.COM
U2
LP2985AIM5-5.0/NOPB
ON/OFF
VIN
VOUT
GND
BYPASS
+5V
C9
2.2uF/16V
C10
10nF
C11
10uF/6.3V