Part	Material	Plating
Body	Brass	Nickel
Center Contact	Beryllium Copper	Gold
Insulator	PTFE	——-

SPECIFICATIONS:

ELECTRICAL
Impedance: 50 Ohm
Frequency Range: DC- 11GHz
Contact current: DC 3.5A max
Voltage rating: 250V rms
Contact resistance: Center contact: 2.0mΩ
Outer contact: 0.2mΩ
Insulation resistance: 5000MΩ min
V.S.W.R: 1.2:1MAX
Insertion Loss: 0.18dB max.at 9GHz

MECHANICAL
Coupling nut torque: 20Ncm-170Ncm
Life: 500matings
Contact captivation: ≥27N

ENVIRONMENTAL
Temperature range: -65ºC ~ + 125ºC
Corrosion resistance: MIL-STD-202,Method101,Condition B.
Moisture resistance: MIL-STD-202,Method106
Thermal shock: MIL-STD-202,Method107,Condition B.
Vibration: MIL-STD-202,Method204,Condition B.
Shock: MIL-STD-202,Method213,Condition G.
Ingress Protection: IP67 Mated

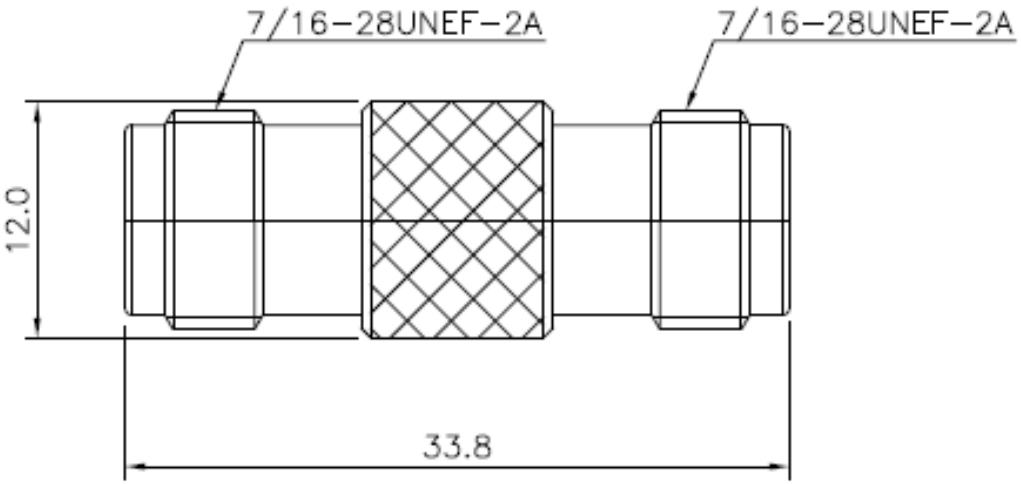

Dimensions are in mm, for reference only, and are subject to change without notice.

Premier RF
17 Roslyn CT
Patchogue, NY 11772
PH: 631-447-3804
sales@premierrf.com
www.premierrf.com

PART NUMBER	**PRF-AD4F4F-IP67**
DESCRIPTION	**TNC FEMALE TO TNC FEMALE ADAPTER, IP67 MATED**

8/23/2013
APPROVED
A. Ianacci