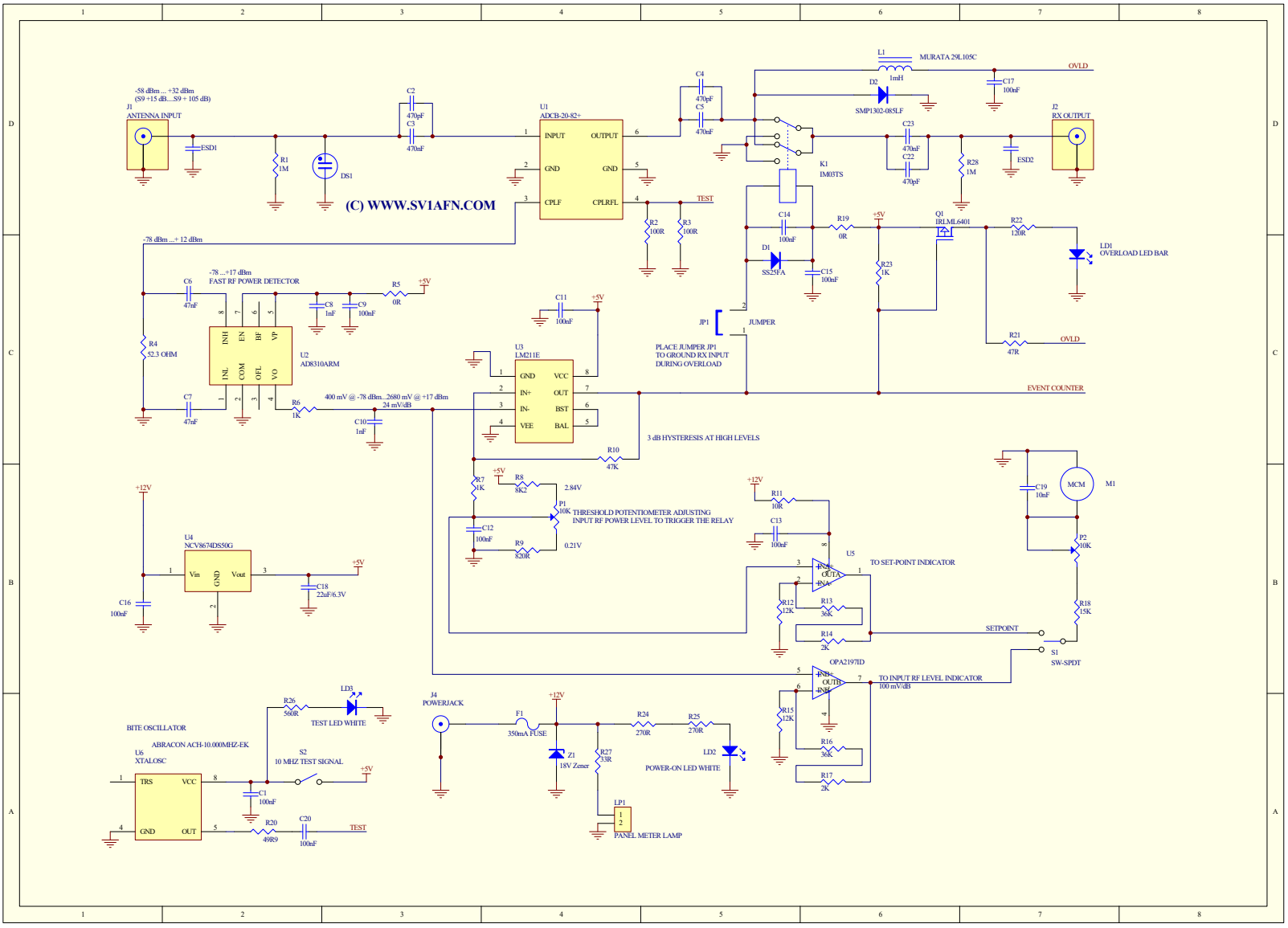

(C) WWW.SV1AFN.COM