NSV Energy LLC
35 Hickory Springs Industrial Drive
Canton GA 30115

240 to 330 KW CONDENSING STEAM TURBINE GENERATOR SET

STEAM TURBINE:

Manufacturer:	Siemens (Murray)
Rating:	330 kw
Turbine number:	T-5580
Model number:	HP: C460SII , LP: TG5
Inlet steam:	250 psig/404 °F
Extraction steam:	45 psig/292.4 °F
Exhaust steam:	2.5” hga
Maximum inlet steam flow:	10,500 lbs/hr
Extraction steam flow:	6,250 lbs/hr
Condensing steam flow:	4,250 lbs/hr
Power at zero extraction:	240 KW
Steam rate at zero extraction:	17.71 lbs/kwh
Number of stages:	Hp turbine : 1 stage, LP turbine : 5 stages
Speed:	6109 rpm
Rotation:	CW (from Governor end)

GEAR REDUCER:

Manufacturer:	Nuttall Gear
HP:	550
Service factor:	2.25
Speed:	6109/1800 rpm

GENERATOR:

Manufacturer:	ABB induction (we can change to Synchronous)
Type:	M2BG 586MA 4B3 frame 586M
Rating:	470 hp
Voltage:	480 v/3/60 hz
Speed:	1800 rpm

CONDENSER:

Manufacturer:	Ambassador Heat transfer company
Steam Condensed:	5000 lbs/hr
Cooling water:	750 gpm @85 deg f
Tube material:	ss

CONTROLS:

Governor:	Woodward 505E
Generator:	GE/Multilin SR489

SCOPE OF SUPPLY

Steam Turbine, gear reducer generator with lube oil system on skid
Main steam valve for Hp and LP turbine
Steam piping, expansion joint, safety valves
Condenser with hot well, condensate extraction pump, air ejector
Gland steam system

NSV Energy LLC
35 Hickory Springs Industrial Drive
Canton GA 30115

Steam traps on main steam line and extraction line
Generator circuit breaker
Woodward 505E and Ge/Multilin Sr489 relay
Cooling Tower
Cooling water pumps with motor
Drawings, manuals

HISTORY:
Year built: 2001 shutdown 2003
Complete system with steam and condensate, cooling water piping .

NSV Energy LLC
35 Hickory Springs Industrial Drive
Canton GA 30115

NSV Energy LLC
35 Hickory Springs Industrial Drive
Canton GA 30115

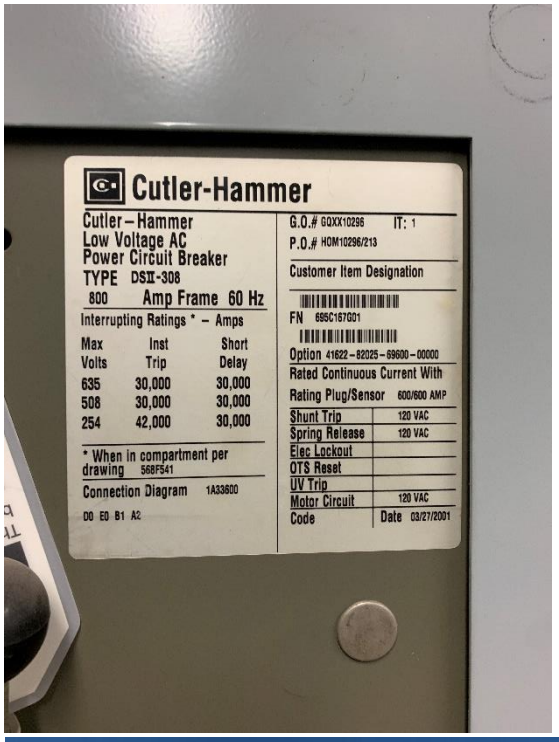

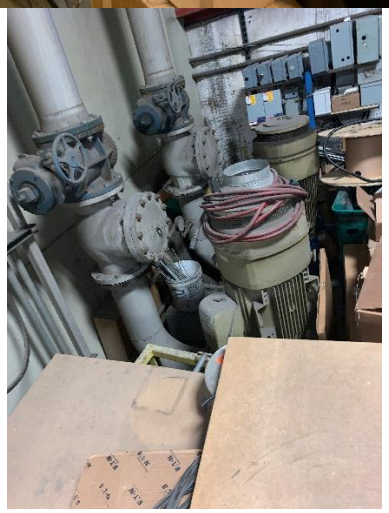

E-414

DESIGN OPERATING CONDITIONS

LP TURBINE

Turbine Serial No. T-5580 **S. O. T.-** 5580

Rated Steam Pressure at Throttle - - - - - - - -	44.3	#/sq. in. ga.
Rated Steam Total Temperature at Throttle - -	292.4	° F.
Rated Back Pressure at Exhaust - - - - - - - - -	---	#/sq. in. ga.
Rated Vacuum at Exhaust - - - - - - - - - - - - -	2.5	" Hg. Abs.
Rated Horsepower - - - - - - - - - - - - - - - -	232	H. P.
K. W. -	---	K. W.
Rated Turbine Operating Speed - - - - - - - - - -	6109	R. P. M.
Rated Gear Operating Speed - - - - - - - - - - - -	1800	R. P. M.
Turbine Rotation (Viewed from Gov. End) - - - -	Clockwise	
Hand Valves -	1	

See Table Below

Operating Data

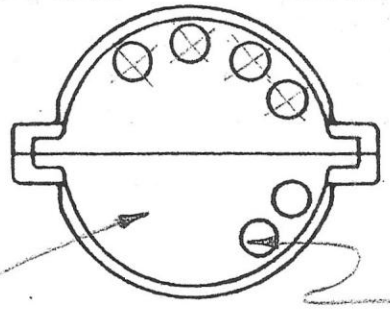

View from Gov. End of Turbine

Gov. Comp.

H.V.#2

Stm. Pr.	Stm. Temp. T.T.	Stm. Temp. S.H.	Exh. Pr.	H. P.	R. P. M.	Hand Valve Data Nozzle Compartment Gov.	#2						Remarks
44.3	292.4	0	2.5 HgA	232	6109	OPEN	SHUT						RATED/GUARANTEE
44.3	292.4	0	2.5 HgA	255	6109	OPEN	OPEN						
					5804								MIN. SPEED
					6415								MAX. SPEED

CARBON RING DIAMETRAL COLD CLEARANCES

	Min.	Max.
Steam End Rings -	0.0061L	0.009L
Exhaust End Rings -	0.0051L	0.008L
Diaphragm Ring/s 2ND stage thru 5TH stage ---	0.0061L	0.009L
Diaphragm Ring/s --- stage thru --- stage ---		

Carbon Rings in Steam End Gland to be Arranged for ATMOSPHERIC & ABOVE OPERATION.

Carbon Rings in Exhaust End Gland to be Arranged for CONDENSING Operation.

Casing Hydrostatic Test Report

urbine Serial Number T-5580

T R Number (if applicable) _____

Are there connections that must be welded in the casing prior to Hydrotest? Yes

Inlet Pressure	45 PSIG	**1st Stage Pressure**	22.9 PSIA	**Exh Pressure**	1.23 PSIA
Inlet Temperature	292° F	**1st Stage Temperature**	235° F	**Exh Temperature**	109° F

Casing Materials Steam Casing Base & Cover - A216WCB; Exhaust Casing Base & Cover - A278 CL40

Test Blank Assembly Position Nozzle Block

Inspector: Verify all connections are welded if specified above _____

Check test pressure gauges for current calibration 1311-1322

Test Data

Part / Assembly or Casing Section	Required Test Pressure	Required Test Duration	Actual Test Pressure	Test Duration Start	Test Duration Stop	Inspector Date	Witness Date
Steam Chest	450 PSIG	30 min	450 PSIG	2:05	2:40	02-09-01 B. Prier	
Stages 1-Exhaust	25 PSIG	30 min	25 PSIG	2:05	2:40	02-09-01 B. Prier	
		min					
		min					
		min					
		min					
		min					

QAD-101-C

5/26/00

Material: OK27136-5580 Plant: MU01 Usage: 1
TURBINE CASING 20" UP EXHAUST Valid 01/15/2001
Reqd Qty 1.000 Base Qty 0.000

Item	Level	Component Description	Rev	Quantity	UOM Usage	I/C PT/PS
0000	.1	6K6131-1 CASING ASS'Y	03	0.001	EA 1	L F/20
0001	.1	7K4054-7 STM CASE CVR	05	1.000	EA 1	L E/20
0002	.1	7K9680-2T STEAM CASING BASE MACH.DW	06	1.000	EA 1	L E/20
0004	.1	7K10303-5 EXHAUST CASING BASE 20 UP	01	1.000	EA 1	L E/20
0005	.1	7K10359-11 EXHAUST CASING COVER MACH	00	1.000	EA 1	L E/20
0006	.1	5K3801-2 EXH BRG CASE COVER	00	1.000	EA 1	L E/20
0007	.1	1S438-6 PIPE PLUG-ALLEN 3/4	01	2.000	EA 1	L F/40
0008	.1	1S641-2 WASHER-SPECIAL O.D.	01	3.000	EA 1	L F/40
0009	.1	1K2764-1 LIFTING BRACKET	01	1.000	EA 1	L E/40
0010	.1	1S184-30 STUD 5/8 11 X 4-3/8 CO	05	4.000	EA 1	L E/20
0011	.1	1S280-11 ALLENUT	02	4.000	EA 1	L F/40
0012	.1	1S571-7 CAPSCREW HEX HD	01	42.000	EA 1	L F/40
0013	.1	1S571-12 CAPSCRW HEX HD 3/4 X 3-3/	00	4.000	EA 1	L F/40
0014	.1	1S573-8 CAPSCREW HEX HD	00	7.000	EA 1	L F/40
0015	.1	1S304-10 HEXNUT	07	30.000	EA 1	L F/40
0016	.1	1S573-15 CAPSCRW HEX HD 1 X 3-3/4	00	23.000	EA 1	L F/40
0017	.1	1S570-7 CAPSCREW HEX HD	00	2.000	EA 1	L F/40
0018	.1	1S318-3 CAPSCREW SOC HD	02	7.000	EA 1	L F/40
0019	.1	1S596-2 CAPSCREW SOC HD-INTERNAL	06	5.000	EA 1	L F/40
0020	.1	1S238-48 TAPER PIN #8	00	8.000	EA 1	L F/40
0021	.1	1S599-95 TAPER DOWEL #7	01	2.000	EA 1	L F/40
0022	.1	5K2182-1 NOZZ BLOCK HALF 20 DRILL	02	1.000	EA 1	L E/20
0023	.1	1S438-4 PIPE PLUG-ALLEN 3/8	01	2.000	EA 1	L F/40
0024	.1	1S318-6 CAPSCREW SOC HD	02	10.000	EA 1	L F/40
0025	.1	1S280-12 ALLENUT	02	2.000	EA 1	L F/40
0026	.1	1S185-22 STUD	04	2.000	EA 1	L E/20

Material: OK27136-5580 Plant: MU01 Usage: 1
TURBINE CASING 20" UP EXHAUST Valid 01/15/2001
Reqd Qty 1.000 Base Qty 0.000

Item	Level	Component Description	Rev	Quantity	UOM Usage	I/C PT/PS
0029	.1	1S338-34	00	2.000	EA	L
		ROLL PIN .125 X .375			1	F/40
0036	.1	1A2787-18	03	2.000	EA	L
		SHIM			1	E/20
0037	.1	1S573-6	00	4.000	EA	L
		CAPSCREW HEX HD			1	F/40
0038	.1	1S599-99	01	2.000	EA	L
		TAPER PIN THRD #7 X 2-3/4			1	F/20
0044	.1	1S185-83	04	8.000	EA	L
		STUD 3/4 DIA 3-5/8 LG			1	E/20
0045	.1	1S304-8	07	8.000	EA	L
		HEXNUT			1	F/40
0046	.1	1S428-8	04	1.000	EA	L
		GARLOCK EDGE GASKET			1	F/40
0047	.1	3A1956-29	01	4.000	EA	L
		WASHER-STL			1	E/40
0049	.1	1S438-5	01	2.000	EA	L
		PIPE PLUG-ALLEN 1/2			1	F/40
0050	.1	1S595-2	02	2.000	EA	L
		JACK BOLT SQ HD 3/4 X 4			1	F/40
0050	.1	1S595-2	02	2.000	EA	L
		JACK BOLT SQ HD 3/4 X 4			1	F/40
0051	.1	3J8002-12	02	2.000	EA	L
		FLANGE BLIND			1	E/20
0052	.1	1J8011-19	02	2.000	EA	L
		O RING 1-9/16 X 1-5/16			1	F/40
0053	.1	1S228-5	01	4.000	EA	L
		CAPSCRW SOC HD 3/8-16 X 1			1	F/40

STEAM TURBINE GENERATAR

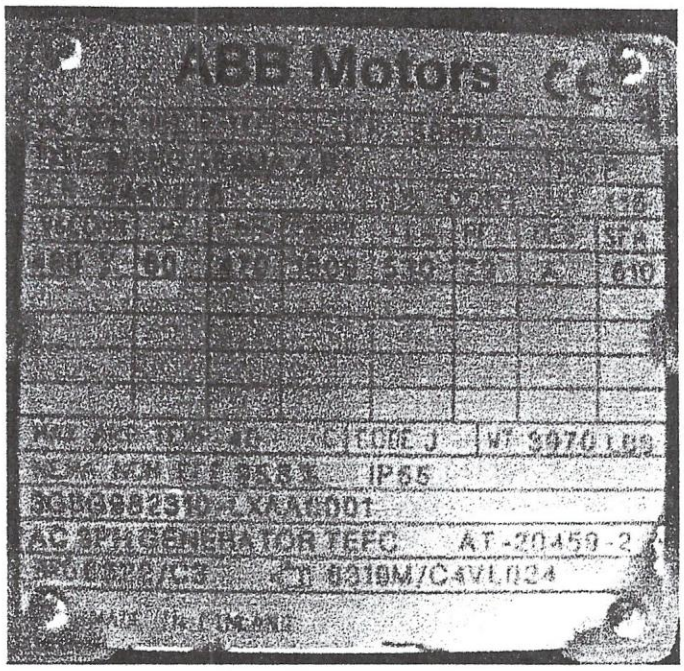

ABB Motors CE							
AC 3PH MOTOR TEFC				FR 586M			
TYPE M2BG 586MA 4B3						INS F	
SER 3445976		TIME CONT				SF 115	
V & CONN	HZ	HP	RPM	FLA	PF%	DES	SFA
480 Y	60	470	1809	530	79	A	610
MAX AMB TEMP 40°C		CODE J				WT 3970 LBS	
NEMA NOM EFF 95.8% IP55							
3GBG982310-LXAA0001							
AC 3PH GENERATOR TEFC AT-20459-2							
BRG 6322/C3 6319M/C4VL024							

AMBASSADOR HEAT TRANSFER COMPANY

SURFACE CONDENSER SPECIFICATION

						INQUIRY NO.	
3	DUTY	4,530,000	BTU/HR	SERVICE	SURFACE CONDENSER	ITEM	
4	MODEL	WCSC		SIZE	24 X 174	DATE	9/7/00
5	SHELLS / UNIT	1		TYPE	NXM	REV.	0

PERFORMANCE CONDITIONS

	SHELL SIDE			TUBE SIDE		
8	STEAM CONDENSED	5,000	LBS/HR	COOLING WATER, FLOW RATE	750	GPM
9	STEAM INLET TEMP.	108.04	°F	COOLING WATER, INLET TEMP.	85	°F
10	STEAM INLET ENTHALPY	1017	BTU/LB	COOLING WATER, OUTLET TEMP	97.55	°F
11	ABS. PRESS. AT INLET	2.5	IN. HG	COOLING WATER HEAD LOSS	7.92	FT
12	LMTD.	15.95	°F	VELOCITY IN TUBES	5.21	FT/SEC
13	CORR. TRANSFER RATE	380.3	BTU / LB FT ² °F	TUBE CLEANLINESS FACTOR	85	%

CONSTRUCTION DETAILS

	SHELL SIDE			TUBE SIDE		
16	CODE REQUIREMENT	ASME, HEI		CODE REQUIREMENT	ASME SECT.VIII, DIV. 1	
17	DESIGN PRESSURE	15 PSI & FV		DESIGN PRESSURE	150	PSIG
18	TEST PRESSURE	FLOODED		TEST PRESSURE	225	PSIG
19	DESIGN TEMPERATURE	250	°F	DESIGN TEMPERATURE	150	°F
20	EFFECTIVE SURFACE	776	FT ²	NO. TUBE SIDE PASSES	2	
21	SHELL DIA.	24	IN	DIVIDED WATER BOX	NO	
22	CONDENSATE DISCHARGE	1.5	IN	TUBE / TUBESHEET JOINT	ROLLED	
23	HOT WELL OUTLET	3	IN	TUBE SIZE	0.75 IN. OD	18 BWG
24	AIR OFF TAKE	1.5	IN	TUBE LENGTH	174 IN.	
25	HOT WELL CAPACITY	250	GAL			
26	IMPINGEMENT PROTECTION	YES				
27	PACKED TUBE SHEET	NO				
28	SKID	YES				
29	WEIGHT, EMPTY	16,900	LBS			
30	WEIGHT, FLOODED	23,300	LBS			

NOZZLES	TUBE SIDE SIZE	TUBE SIDE RATING	SHELL SIDE SIZE	SHELL SIDE RATING
INLET	8	150	16	LW
OUTLET	8	150		
RELIEF			8	150 FF

MATERIALS OF CONSTRUCTION

TUBES	STAINLESS STEEL	SHELL	STEEL
TUBE SHEETS	STEEL	TUBE SUPPORTS	STEEL
WATER BOX	STEEL	SHELL GASKETS	
WATER BOX COVER	STEEL	WATER BOX GASKETS	CF

ACCESSORY EQUIPMENT

37	VACUUM PUMPS	QTY. N/A	MOTOR	N/A	
38	EJECTOR PACKAGE:	YES STAGES	TWO	NUMBER OF ELEMENTS	TWO(2)
39	FIRST STAGE. EJECTOR	QTY. TWO (2)		INTERCONDENSER	ONE (1)
40	SECOND STAGE EJECTOR	QTY. TWO (2)		AFTERCONDENSER	ONE (1)
41	STEAM PRESSURE			STEAM QUANTITY	
42	STEAM STRAINERS	QTY. N/A		STEAM VALVES, QTY.	FIVE (5)
43	CONDENSATE PUMP	QTY. TWO (2)		TDH	725 FT
44	PUMP MOTORS	QTY. TWO (2)	POWER	460 / 60 hz / 3 ph	
45	LIQUID LEVEL CONTROLLER	BY OTHERS			
46	RECIRC. VALVE, QTY	ONE (1) BYPASS RELIEF VALVE		DISCHARGE VALVE, QTY.	ONE (1) CONTROL VALVE
47	ATMOSPHERIC RELIEF VALVE	8 INCH PER HEI FOR PROTECTION			
48	STEAM INLET EXPANSION JOINT	16" PRESSURE BALANCED			
49	INSTRUMENTATION:	THERMOMETERS	3	PRESS. GAGE 2	VAC. GAGE 1
50	PIPING YES	WIRING YES		STARTERS NO	ELECTRICAL PANEL YES

51 REMARKS: INCLUDES LEVEL TRANSMITER, FLOW TRANSMITTER, AND PRESSURE TRANMITTER

52

53

54

AMBASSADOR HEAT TRANSFER COMPANY

AHT JOB NO. 00765

SURFACE CONDENSER PERFORMANCE CURVE

REV. NO. 0, 8/25/00

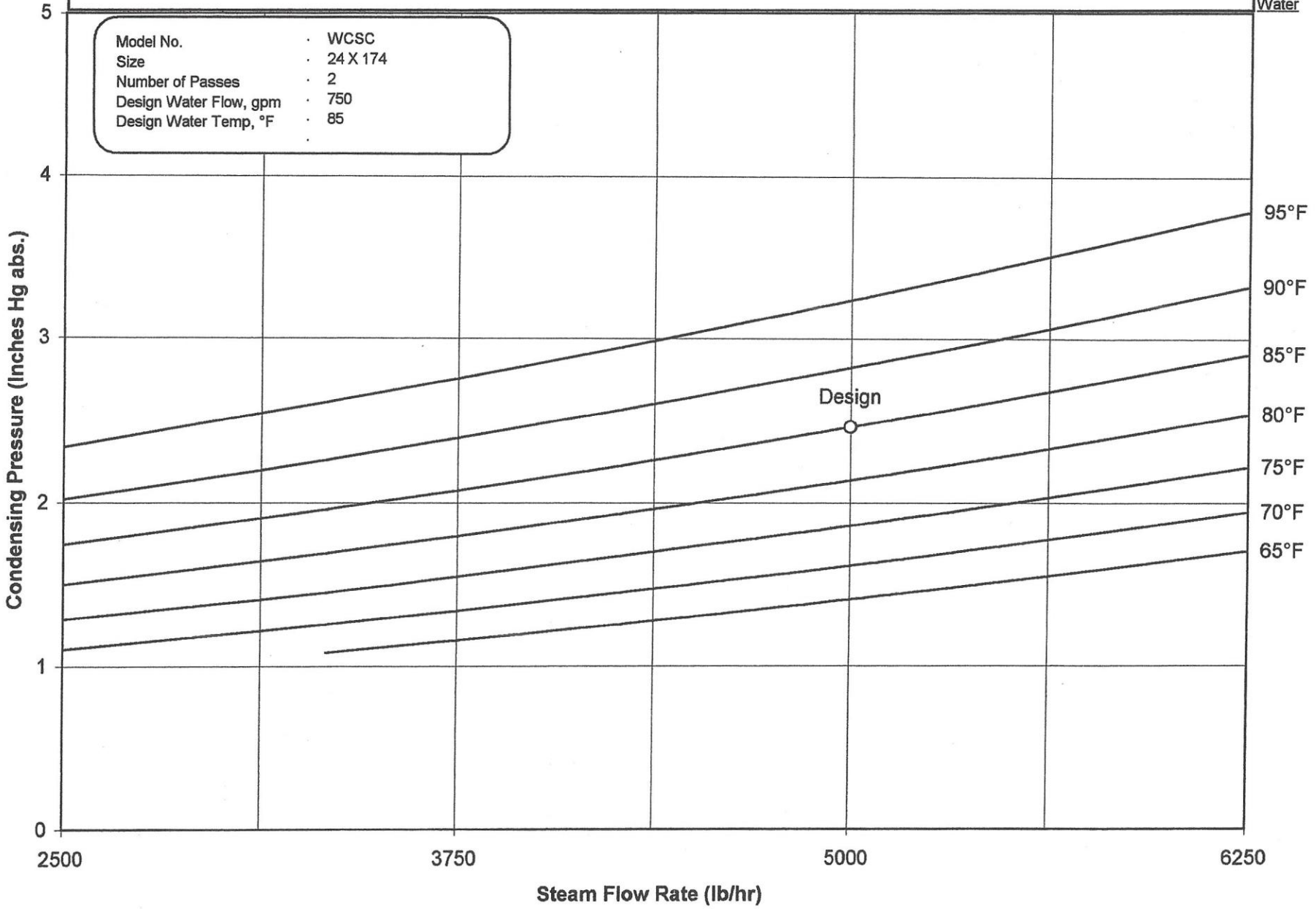

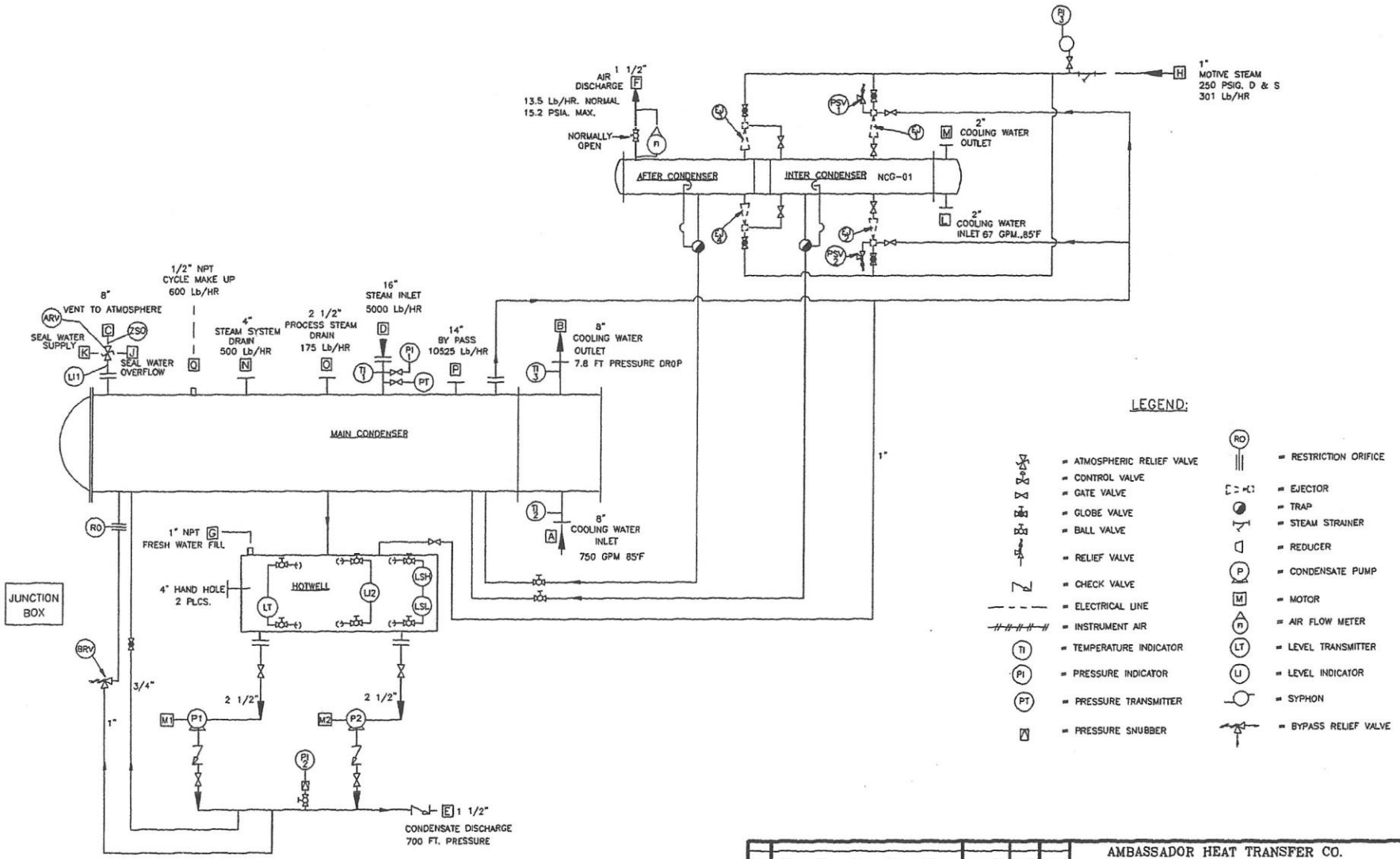

REV	DESCRIPTION	DATE	BY	APPRVD.
2	AS BUILT	1/30/01	AST	RG
1	REVISED PER COMMENTS	11/6/00	AST	RG
0	ORIGINAL ISSUE	9/7/00	AST	RG

AMBASSADOR HEAT TRANSFER CO.
P.O. BOX 42344
CINCINNATI, OHIO 45242

TITLE: P & I DIAGRAM
SURFACE CONDENSER PACKAGE

SCALE: NONE

DRAWING NUMBER: 00765-PID

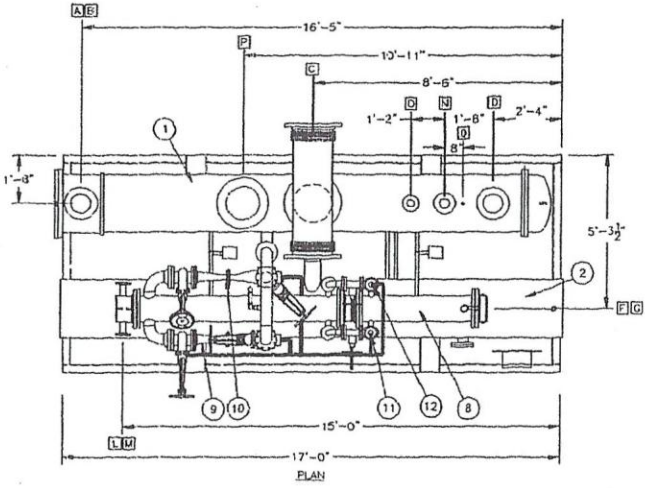

PLAN

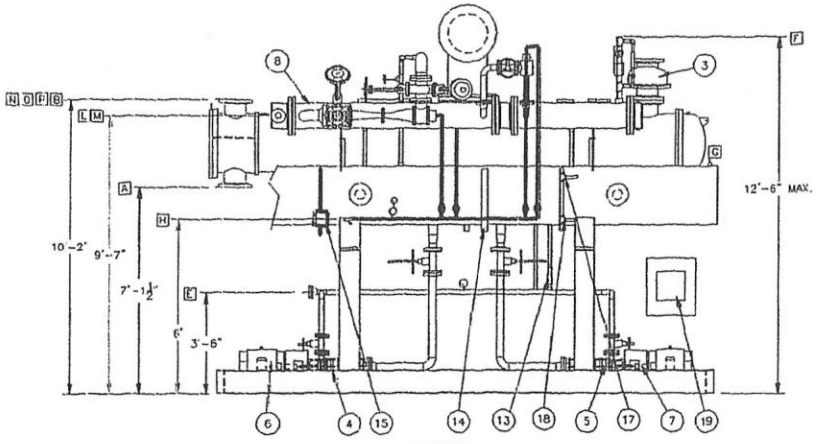

ELEVATION

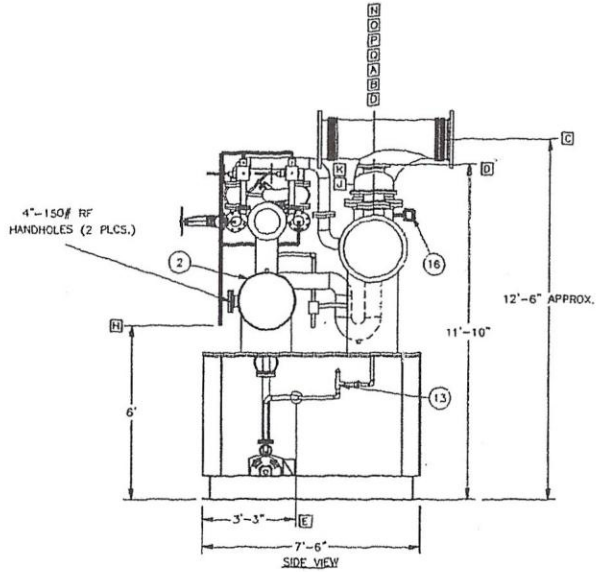

SIDE VIEW

NOZZLE SCHDULE

NOZZLE	DESCRIPTION	QTY	SIZE	SCH.	TYPE
A	COOLING WATER INLET	1	8"	150#	RF
B	COOLING WATER OUTLET	1	8"	150#	RF
C	STEAM INLET	1	16"	150#	RF
D	ATM.RELIEF VALVE VENT	1	8"	150#	FF
E	CONDENSATE DISCHARGE	1	1 1/2"	300#	RF
F	AIR DISCHARGE	1	1 1/2"	--	NPT
G	FRESH WATER FILL	1	1"	--	NPT
H	MOTIVE STEAM INLET	1	1"	--	NPT
I	INSTRUMENT AIR	1	1/2"	--	NPT
J	SEAL WATER OVERFLOW ATM.RELIEF	1	3/4"	--	NPT
K	SEAL WATER SUPPLY ATM. RELIEF	1	3/8"	--	NPT
L	IC/AC COND. COOLING WATER INLET	1	2"	150#	RF
M	IC/AC COND. COOLING WATER OUTLET	1	2"	150#	RF
N	STEAM SYSTEM DRAIN	1	4"	150#	RF
O	PROCESS STEAM DRAIN	1	2 1/2"	150#	RF
P	BY PASS	1	14"	150#	RF
Q	CYCLE MAKE UP	1	1/2"	--	NPT

MATERIAL LIST

MARK	TAG#	QTY	DESCRIPTION
1	--	1	MAIN CONDENSER
2	--	1	HOTWELL TANK
3	ARV	1	ATMOSPHERIC RELIEF VALVE
4	P1	1	CONDENSATE PUMP, 1
5	P2	1	CONDENSATE PUMP, 2
6	M1	1	PUMP MOTOR, 1
7	M2	1	PUMP MOTOR, 2
8	NCG-01	1	INTER/AFTER CONDENSER
9	EJ1	1	FIRST STAGE EJECTOR
10	EJ2	1	FIRST STAGE EJECTOR
11	EJ3	1	SECOND STAGE EJECTOR
12	EJ4	1	SECOND STAGE EJECTOR
13	BRV	1	BYPASS RELIEF VALVE
14	LI2	1	LEVEL GAUGE
15	LT	1	LEVEL TRANSMITTER
16	PT	1	PRESSURE TRANSMITTER
17	LSH	1	LEVEL SWITCH HI
18	LSL	1	LEVEL SWITCH LOW
19	JB1	1	JUNCTION BOX

WEIGHTS	
EMPTY	16,900 Lbs.
FLOODED	23,300 Lbs.

1) COMPLETE SKID MOUNTED PACKAGE CONFIGURATION IS SHOWN WHICH PERMITS FACTORY ASSEMBLY AND CHECKOUT.
2) CONNECTION LOCATION TOLERANCE ±1/2".
3) FLANGE BOLT HOLES TO STRADDLE CENTER LINES.
4) EXPANSION JOINT, ATM. RELIEF VALVE WILL BE SHIPPED LOOSE.
5) WATER BOXES WILL BE LINED WITH COAL TAR EPOXY, SHERWIN WILLIAMS – HI MIL SHER TAR EPOXY.
6) CONDENSER OUTSIDE SURFACE TO BE PREPARED PER SSPC-SP3 AND PRIMED WITH (1) COAT OF RUSTNOX RUST INHIBITIVE PRIMER AND (1) FINISH COAT OF ENAMELEX ALKYD GLOSS ENAMEL GRAY.

REV	DESCRIPTION	DATE	BY	CHK'D
2	AS BUILT	1/30/01	AST	SS
1	REVISED PER COMMENTS	11/8/00	AST	SS
0	ORIGINAL ISSUE	9-7-00	AST	SS

AMBASSADOR HEAT TRANSFER CO.
P.O. BOX 43344
CINCINNATI, OHIO 45242

TITLE: SURFACE CONDENSER PACKAGE

SCALE: 1=24

DRAWING NUMBER: 00765-GA-1

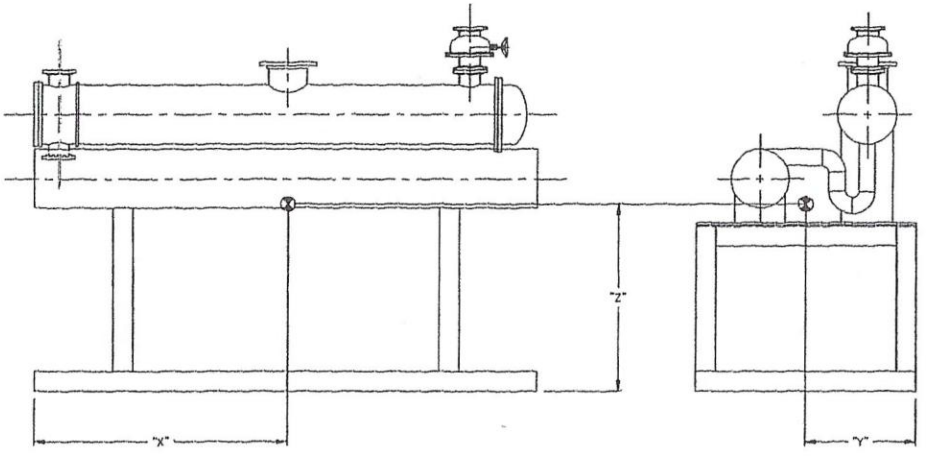

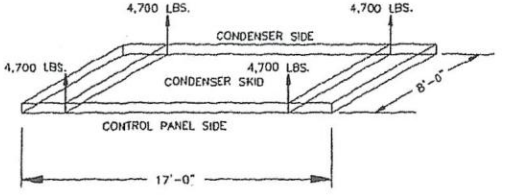

NOTES
1. LIFTING TUBES ARE PROVIDED IN THE SKID FOR LIFTING THE CONDENSER PACKAGE. SPREADER FAME SHOULD BE USED TO AVOID COLLAPSING LOADS ON THE EQUIPMENT. CARE MUST BE TAKEN NOT TO LIFT THE SKID UNEVENLY.

LIFTING DIAGRAM

	WEIGHT POUNDS	"X" INCHES	"Y" INCHES	"Z" INCHES
DRY	16,900	102 3/8	44 4/4	76 1/8
OPERATING	20,300	102 1/4	45 1/8	79 1/2
FLOODED	23,300	102 1/4	41 7/8	83 3/4

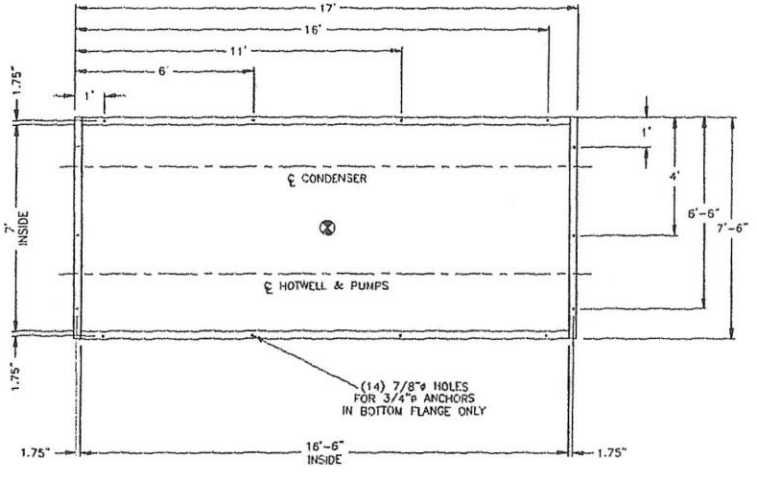

REV	DESCRIPTION	DATE	BY	APPROVD
1	REVISED WIDTH WAS 8'-0"	11/8/00	SAS	
0	ORIGINAL ISSUE	9/7/00	SAS	

AMBASSADOR HEAT TRANSFER CO.
P.O. BOX 42344
CINCINNATI, OHIO 45242

THIS DRAWING IS THE PROPERTY OF AMBASSADOR HEAT TRANSFER CO. AND SHALL NOT BE ALTERED, COPIED, USED FOR MANUFACTURE OR COMMUNICATED TO ANY OTHER PERSON OR COMPANY WITHOUT OUR WRITTEN CONSENT.

TITLE: SURFACE CONDENSER PACKAGE FOUNDATION DRAWING

SCALE: NONE

DRAWING NUMBER: 00765-02