KIRSCH®
DRAPERY HARDWARE

# Wrought Iron

2025 Brochure

SPARKED BY TRADITION

# **WROUGHT IRON:** FOR LOVERS OF OLD WORLD TRADITION

**Real Wrought Iron** is sand casted by skilled iron workers.

**Time-honored** methods and designs.

**Hand finished** so all unique textures and qualities are showcased.

Our skilled iron workers still use the time-honored methods to form classic, heavyweight wrought iron products, while protecting the authenticity of the craft and keeping the timeless practice of this beautiful tradition alive. We are proud to keep this remarkable custom alive with the Kirsch Wrought Iron Collection.

# CONTENTS


06 Overview

08 1" Finials & Components

18 1⅜" Finials & Components

28 Helpful Guides

- 28 AMP™ Motorization
- 30 Estate™ Overview
- 32 Bracket Spacing & Mount Option
- 34 Calculating Drapery Weight
- 35 Stack Guides
- 42 Pole Installation, Cutting & Splicing
- 43 Complete Collection Overview

45 Index

# COLLECTION OVERVIEW

**6** **FINISHES**
An alluring range of metals

**2** **VERSATILE SIZES**
1" & 1⅜"

**1** **ESTATE™ TRAVERSE ROD SIZES**
1⅜"

**1** **REMARKABLE COLLECTION**

**ARCHITRAC™ K-RAIL COMPATIBLE**
1⅜" finials only

**AMP™ MOTORIZATION COMPATIBLE**
Estate™ Traverse Rods only

2

3

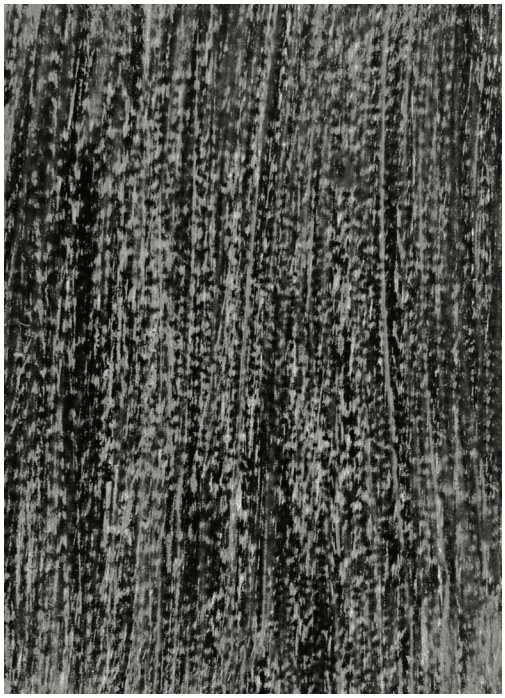

4

1 | Black
2 | Iron Oxide
3 | Rust
4 | Graphite | **NEW**
5 | Chalk | **NEW**
6 | Heirloom Copper | **NEW**

5

6

# 1" Finials & Endcaps

## Axiom

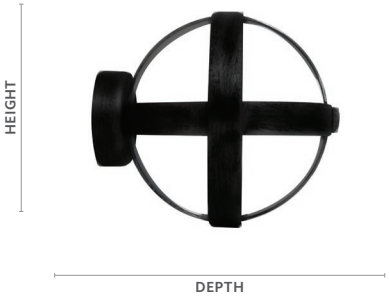


| Fits | Dimensions | Quantity per Box |
|---|---|---|
| 1" Wrought Iron Poles | Depth: 3¼"<br>Height: 2⅞"<br>Width: 2⅞" | 5 pairs per box |

| Product Number & Finish | | | | | |
|---|---|---|---|---|---|
| **56381770** | Black | **56381804** | Graphite | **56381802** | Iron Oxide |
| **56381803** | Chalk | **56381805** | Heirloom Copper | **56381777** | Rust |

Finial Plugs included.

## Darby

| Fits | Dimensions | Quantity per Box |
|---|---|---|
| 1" Wrought Iron Poles | Depth: 2 7/16"<br>Height: 1½"<br>Width: 1½" | 5 pairs per box |

| Product Number & Finish | | | | | |
|---|---|---|---|---|---|
| **56384770** | Black | **56384804** | Graphite | **56384802** | Iron Oxide |
| **56384803** | Chalk | **56384805** | Heirloom Copper | **56384777** | Rust |

Finial Plugs included.

## Lincoln

| Fits | Dimensions | Quantity per Box |
|---|---|---|
| 1" Wrought Iron Poles | Depth: 2¼"<br>Height: 1 13/16"<br>Width: 1 13/16" | 5 pairs per box |

| Product Number & Finish | | | | | |
|---|---|---|---|---|---|
| **56383770** | Black | **56383804** | Graphite | **56383802** | Iron Oxide |
| **56383803** | Chalk | **56383805** | Heirloom Copper | **56383777** | Rust |

Finial Plugs included.

## Otto

| Fits | Dimensions | Quantity per Box |
|---|---|---|
| 1" Wrought Iron Poles | Depth: 2 1/16"<br>Height: 2 11/16"<br>Width: 2 11/16" | 5 pairs per box |

| Product Number & Finish | | | | | |
|---|---|---|---|---|---|
| **56382770** | Black | **56382804** | Graphite | **56382802** | Iron Oxide |
| **56382803** | Chalk | **56382805** | Heirloom Copper | **56382777** | Rust |

Finial Plugs included.

**Otto** | Black
**Lincoln** | Chalk
**Darby** | Heirloom Copper

# 1" Finials & Endcaps

## Pedestal Ball

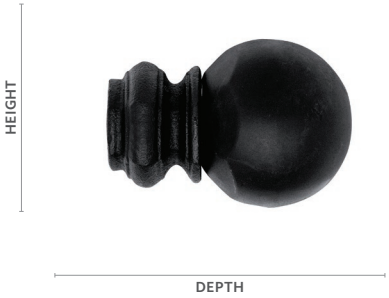


| Fits | Dimensions | Quantity per Box |
|---|---|---|
| 1" Wrought Iron Poles | Depth: 3¼"<br>Height: 2"<br>Width: 2" | 5 pairs per box |

| Product Number & Finish | | | | | |
|---|---|---|---|---|---|
| **56351770** | Black | **56351804** | Graphite | **56351802** | Iron Oxide |
| **56351803** | Chalk | **56351805** | Heirloom Copper | **56351777** | Rust |

Finial Plugs included.

## Petite Faucet

| Fits | Dimensions | Quantity per Box |
|---|---|---|
| 1" Wrought Iron Poles | Depth: 1¾"<br>Height: 1¾"<br>Width: 1¾" | 5 pairs per box |

| Product Number & Finish | | | | | |
|---|---|---|---|---|---|
| **56374770** | Black | **56374804** | Graphite | **56374802** | Iron Oxide |
| **56374803** | Chalk | **56374805** | Heirloom Copper | **56374777** | Rust |

Finial Plugs included.

**1⅜" Otto** | Black
**1" Otto** | Rust

# 1" Finials & Endcaps

## Petite Modern Ball

| Fits | Dimensions | Quantity per Box |
|---|---|---|
| 1" Wrought Iron Poles | Depth: 2"<br>Height: 1¾"<br>Width: 1¾" | 5 pairs per box |

| Product Number & Finish | | | | | |
|---|---|---|---|---|---|
| **56373770** | Black | **56373804** | Graphite | **56373802** | Iron Oxide |
| **56373803** | Chalk | **56373805** | Heirloom Copper | **56373777** | Rust |

Finial Plugs included.

## Ponce

| Fits | Dimensions | Quantity per Box |
|---|---|---|
| 1" Wrought Iron Poles | Depth: 4 13/16"<br>Height: 1⅛"<br>Width: 1⅛" | 5 pairs per box |

| Product Number & Finish | | | | | |
|---|---|---|---|---|---|
| **56385770** | Black | **56385804** | Graphite | **56385802** | Iron Oxide |
| **56385803** | Chalk | **56385805** | Heirloom Copper | **56385777** | Rust |

Finial Plugs included.

## Endcap

| Fits | Dimensions | Quantity per Box |
|---|---|---|
| 1" Wrought Iron Poles | Depth: ⅞"<br>Height: 1⅞"<br>Width: 1⅞" | 5 pairs per box |

| Product Number & Finish | | | | | |
|---|---|---|---|---|---|
| **56358770** | Black | **56358804** | Graphite | **56358802** | Iron Oxide |
| **56358803** | Chalk | **56358805** | Heirloom Copper | **56358777** | Rust |

Finial Plugs included.

# 1" Poles

## 6' Pole

| Diameter | Length | Quantity per Box |
|---|---|---|
| 1" | 6' | 6 pieces per box |

| Product Number & Finish | | | | | |
|---|---|---|---|---|---|
| **56359770** | Black | **56359804** | Graphite | **56359802** | Iron Oxide |
| **56359803** | Chalk | **56359805** | Heirloom Copper | **56359777** | Rust |

## 8' Pole

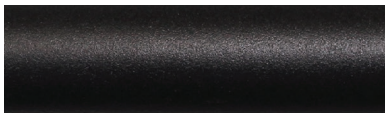

| Diameter | Length | Quantity per Box |
|---|---|---|
| 1" | 8' | 6 pieces per box |

| Product Number & Finish | | | | | |
|---|---|---|---|---|---|
| **56360770** | Black | **56360804** | Graphite | **56360802** | Iron Oxide |
| **56360803** | Chalk | **56360805** | Heirloom Copper | **56360777** | Rust |

# 1" Rings

## Ring

| Fits | Dimensions | Quantity per Box |
|---|---|---|
| 1" Wrought Iron Poles | Internal: 1⅝"<br>External: 2⅛"<br>External to eyelet: 2⅜" | 10 bags per box -<br>7 rings per bag |

| Product Number & Finish | | | | | |
|---|---|---|---|---|---|
| **56361770** | Black | **56361804** | Graphite | **56361802** | Iron Oxide |
| **56361803** | Chalk | **56361805** | Heirloom Copper | **56361777** | Rust |

## Bypass C-Ring

| Fits | Dimensions | Quantity per Box |
|---|---|---|
| 1" Wrought Iron Poles | Internal: 1⅝"<br>External: 2⅛"<br>External to eyelet: 2⅜" | 10 bags per box -<br>7 rings per bag |

| Product Number & Finish | | | | | |
|---|---|---|---|---|---|
| **56371770** | Black | **56371804** | Graphite | **56371802** | Iron Oxide |
| **56371803** | Chalk | **56371805** | Heirloom Copper | **56371777** | Rust |

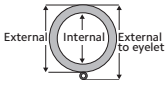


Use the measurement guide to the left to help determine the correct dimensions for your selected product.

# 1" Brackets

## 3½" Return Bracket

| Fits | Dimensions | | Quantity per Box |
|---|---|---|---|
| 1" Wrought Iron Poles | Depth: 4¼"<br>Height: 4"<br>Width: ⅝" | Wall to Pole: 3"<br>Return: 3½" | 5 pieces per box |

| Product Number & Finish | | | | | |
|---|---|---|---|---|---|
| **56362770** | Black | **56362804** | Graphite | **56362802** | Iron Oxide |
| **56362803** | Chalk | **56362805** | Heirloom Copper | **56362777** | Rust |

## 5⅜" Return Bracket

| Fits | Dimensions | | Quantity per Box |
|---|---|---|---|
| 1" Wrought Iron Poles | Depth: 6¼"<br>Height: 4¼"<br>Width: ⅝" | Wall to Pole: 4⅞"<br>Return: 5⅜" | 5 pieces per box |

| Product Number & Finish | | | | | |
|---|---|---|---|---|---|
| **56363770** | Black | **56363804** | Graphite | **56363802** | Iron Oxide |
| **56363803** | Chalk | **56363805** | Heirloom Copper | **56363777** | Rust |

## Center Bypass Bracket

| Fits | Dimensions | | Quantity per Box |
|---|---|---|---|
| 1" Wrought Iron Poles | Depth: 4¼"<br>Height: 4"<br>Width: ⅝" | Wall to Pole: 3"<br>Return: 3½" | 5 pieces per box |

| Product Number & Finish | | | | | |
|---|---|---|---|---|---|
| **56372770** | Black | **56372804** | Graphite | **56372802** | Iron Oxide |
| **56372803** | Chalk | **56372805** | Heirloom Copper | **56372777** | Rust |

## Double Bracket

| Fits | Dimensions | | Quantity per Box |
|---|---|---|---|
| 1" Wrought Iron Poles | Depth: 7½"<br>Height: 5⅝"<br>Width: ⅝" | Wall to Pole: 3"<br>Inner Return: 3½"<br>Outer Return: 6½" | 5 pieces per box |

| Product Number & Finish | | | | | |
|---|---|---|---|---|---|
| **56365770** | Black | **56365804** | Graphite | **56365802** | Iron Oxide |
| **56365803** | Chalk | **56365805** | Heirloom Copper | **56365777** | Rust |

Use the measurement guide to the left to help determine the correct dimensions for your selected product.

# 1" Brackets, Accessories & Components

## Inside Mount Socket

| Fits | Dimensions | Quantity per Box |
|---|---|---|
| 1" Wrought Iron Poles | Depth: 1"<br>Height: 2"<br>Width: 2" | 5 pairs per box |

| Product Number & Finish | | | | | |
|---|---|---|---|---|---|
| **56370770** | Black | **56370804** | Graphite | **56370802** | Iron Oxide |
| **56370803** | Chalk | **56370805** | Heirloom Copper | **56370805** | Rust |

Mounts a 1" rod between two facing walls.

## Swivel Socket

| Fits | Dimensions | Quantity per Box |
|---|---|---|
| 1" Wrought Iron Poles | Partial Length: 1⅝"<br>Plug Length: ⅞"<br>Full Length: 2½" | 5 pieces per box |

| Product Number & Finish | | | | | |
|---|---|---|---|---|---|
| **56367770** | Black | **56367804** | Graphite | **56367802** | Iron Oxide |
| **56367803** | Chalk | **56367805** | Heirloom Copper | **56367777** | Rust |

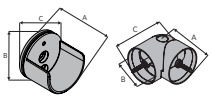


Use the measurement guide to the left to help determine the correct dimensions for your selected product.

# 1" Accessories & Components

## 36" Baton with Bypass C-Ring

| Fits | Dimensions | Quantity per Box |
|---|---|---|
| 1" Wrought Iron Poles | 36" long | 6 pieces per box |

| Product Number & Finish | | | | | |
|---|---|---|---|---|---|
| **56375770** | Black | **56375804** | Graphite | **56375802** | Iron Oxide |
| **56375803** | Chalk | **56375805** | Heirloom Copper | **56375777** | Rust |

## Finial Plug

| Fits | Quantity per Box |
|---|---|
| 1" Wrought Iron Poles | 50 pieces per box |

| Product Number & Finish | |
|---|---|
| **56369058** | White |

## Internal Rod Splice

| Fits | Quantity per Box |
|---|---|
| 1" Wrought Iron Poles | 5 pieces per box |

| Product Number & Finish | |
|---|---|
| **56366061** | Zinc Plated |

Connects two poles together for larger width options.

**Petite Modern Ball** | Black

# 1⅜" Finials & Endcaps

## Axiom

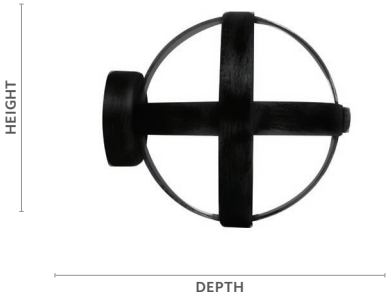


| Fits | Dimensions | Quantity per Box |
|---|---|---|
| 1⅜" Wrought Iron Poles<br>1⅜" Estate™ Traverse Rods<br>1⅜" K-Rail Traverse Rods | Depth: 3 13/16"<br>Height: 3⅜"<br>Width: 3⅜" | 5 pairs per box |

| Product Number & Finish | | | | | |
|---|---|---|---|---|---|
| **56481770** | Black | **56481804** | Graphite | **56481802** | Iron Oxide |
| **56481803** | Chalk | **56481805** | Heirloom Copper | **56481777** | Rust |

Finial Plugs included.

## Darby

| Fits | Dimensions | Quantity per Box |
|---|---|---|
| 1⅜" Wrought Iron Poles<br>1⅜" Estate™ Traverse Rods<br>1⅜" K-Rail Traverse Rods | Depth:3¼ "<br>Height: 2"<br>Width: 2" | 5 pairs per box |

| Product Number & Finish | | | | | |
|---|---|---|---|---|---|
| **56484770** | Black | **56484804** | Graphite | **56484802** | Iron Oxide |
| **56484803** | Chalk | **56484805** | Heirloom Copper | **56484777** | Rust |

Finial Plugs included.

Axiom | Graphite

# 1⅜" Finials & Endcaps

## Lincoln

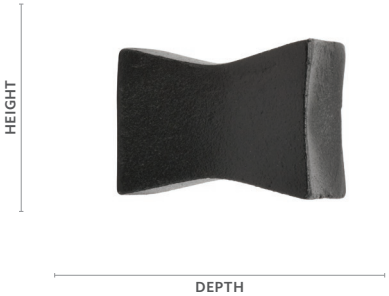


| Fits | Dimensions | Quantity per Box |
|---|---|---|
| 1⅜" Wrought Iron Poles<br>1⅜" Estate™ Traverse Rods<br>1⅜" K-Rail Traverse Rods | Depth: 2⅝"<br>Height: 2⅛"<br>Width: 2⅛" | 5 pairs per box |

| Product Number & Finish | | | | | |
|---|---|---|---|---|---|
| **56483770** | Black | **56483804** | Graphite | **56483802** | Iron Oxide |
| **56483803** | Chalk | **56483805** | Heirloom Copper | **56483777** | Rust |

Finial Plugs included.

## Otto

| Fits | Dimensions | Quantity per Box |
|---|---|---|
| 1⅜" Wrought Iron Poles<br>1⅜" Estate™ Traverse Rods<br>1⅜" K-Rail Traverse Rods | Depth: 2 9/16"<br>Height: 3¼"<br>Width: 3¼" | 5 pairs per box |

| Product Number & Finish | | | | | |
|---|---|---|---|---|---|
| **56482770** | Black | **56482804** | Graphite | **56482802** | Iron Oxide |
| **56482803** | Chalk | **56482805** | Heirloom Copper | **56482777** | Rust |

Finial Plugs included.

## Pedestal Ball

| Fits | Dimensions | Quantity per Box |
|---|---|---|
| 1⅜" Wrought Iron Poles<br>1⅜" Estate™ Traverse Rods<br>1⅜" K-Rail Traverse Rods | Depth: 4⅞"<br>Height: 3⅜"<br>Width: 3⅜" | 5 pairs per box |

| Product Number & Finish | | | | | |
|---|---|---|---|---|---|
| **56451770** | Black | **56451804** | Graphite | **56451802** | Iron Oxide |
| **56451803** | Chalk | **56451805** | Heirloom Copper | **56451777** | Rust |

Finial Plugs included.

## Petite Faucet

| Fits | Dimensions | Quantity per Box |
|---|---|---|
| 1⅜" Wrought Iron Poles<br>1⅜" Estate™ Traverse Rods<br>1⅜" K-Rail Traverse Rods | Depth: 2⅜"<br>Height: 2 3/16"<br>Width: 2 3/16" | 5 pairs per box |

| Product Number & Finish | | | | | |
|---|---|---|---|---|---|
| **56474770** | Black | **56474804** | Graphite | **56474802** | Iron Oxide |
| **56474803** | Chalk | **56474805** | Heirloom Copper | **56474777** | Rust |

Finial Plugs included.

# 1⅜" Finials & Endcaps

## Petite Modern Ball

| Fits | Dimensions | Quantity per Box |
|---|---|---|
| 1⅜" Wrought Iron Poles<br>1⅜" Estate™ Traverse Rods<br>1⅜" K-Rail Traverse Rods | Depth: 3⅜"<br>Height: 1 15/16"<br>Width: 1 15/16" | 5 pairs per box |

| Product Number & Finish | | | | | |
|---|---|---|---|---|---|
| **56473770** | Black | **56473804** | Graphite | **56473802** | Iron Oxide |
| **56473803** | Chalk | **56473805** | Heirloom Copper | **56473777** | Rust |

Finial Plugs included.

## Ponce

| Fits | Dimensions | Quantity per Box |
|---|---|---|
| 1⅜" Wrought Iron Poles<br>1⅜" Estate™ Traverse Rods<br>1⅜" K-Rail Traverse Rods | Depth: 5½"<br>Height: 1¼"<br>Width: 1¼" | 5 pairs per box |

| Product Number & Finish | | | | | |
|---|---|---|---|---|---|
| **56485770** | Black | **56485804** | Graphite | **56485802** | Iron Oxide |
| **56485803** | Chalk | **56485805** | Heirloom Copper | **56485777** | Rust |

Finial Plugs included.

## Endcap

| Fits | Dimensions | Quantity per Box |
|---|---|---|
| 1⅜" Wrought Iron Poles<br>1⅜" Estate™ Traverse Rods<br>1⅜" K-Rail Traverse Rods | Depth: 1⅛"<br>Height: 2½"<br>Width: 2½" | 5 pairs per box |

| Product Number & Finish | | | | | |
|---|---|---|---|---|---|
| **56458770** | Black | **56458804** | Graphite | **56458802** | Iron Oxide |
| **56458803** | Chalk | **56458805** | Heirloom Copper | **56458777** | Rust |

Finial Plugs included.

# 1⅜" Poles

## 6' Pole

| Diameter | Length | Quantity per Box |
|---|---|---|
| 1⅜" | 6' | 6 pieces per box |

| Product Number & Finish | | | | | |
|---|---|---|---|---|---|
| **56459770** | Black | **56459804** | Graphite | **56459802** | Iron Oxide |
| **56459803** | Chalk | **56459805** | Heirloom Copper | **56459777** | Rust |

## 8' Pole

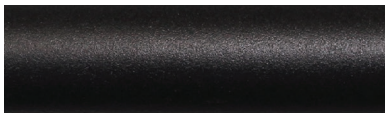

| Diameter | Dimensions | Quantity per Box |
|---|---|---|
| 1⅜" | 8' | 6 pieces per box |

| Product Number & Finish | | | | | |
|---|---|---|---|---|---|
| **56460770** | Black | **56460804** | Graphite | **56460802** | Iron Oxide |
| **56460803** | Chalk | **56460805** | Heirloom Copper | **56460777** | Rust |

**1⅜" Ponce** | Iron Oxide

# 1⅜" Estate™ Traverse Rod

To learn more about the technical specs on Estate Traverse Rods and AMP™ Motorization, see pages 28-31.

## Assembled Set with Slides

| Manual Traversing Rods with Selected Carriers |
|---|
| **Unit of Measure** |
| Foot |
| **AMP™ Motorization Upcharge**<br>Charger, item #62201300 included. Remotes sold separately. |

| Product Number & Finish | | | | | |
|---|---|---|---|---|---|
| **83697770** | Black | **83697804** | Graphite | **83697802** | Iron Oxide |
| **83697803** | Chalk | **83697805** | Heirloom Copper | **83697777** | Rust |

## Assembled Set with Wheeled Ripplefold™ Carriers

| Manual Traversing Rods with Selected Carriers |
|---|
| **Unit of Measure** |
| Foot |
| **AMP™ Motorization Upcharge**<br>Charger, item #62201300 included. Remotes sold separately. |

| Product Number & Finish | | | | | |
|---|---|---|---|---|---|
| **83698770** | Black | **83698804** | Graphite | **83698802** | Iron Oxide |
| **83698803** | Chalk | **83698805** | Heirloom Copper | **83698777** | Rust |

## 1⅜" Estate™ Keystone

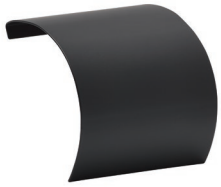

| Fits | Quantity per Box |
|---|---|
| 1⅜" Estate™ Traverse Rods | 25 pieces per box |

| Product Number & Finish | | | | | |
|---|---|---|---|---|---|
| **1833770** | Black | **1833804** | Graphite | **1833802** | Iron Oxide |
| **1833803** | Chalk | **1833805** | Heirloom Copper | **1833777** | Rust |

# 1⅜" Estate™ Traverse Rod Components

To learn more about the technical specs on Estate Traverse Rods and AMP™ Motorization, see pages 28-31.

## Double Bracket

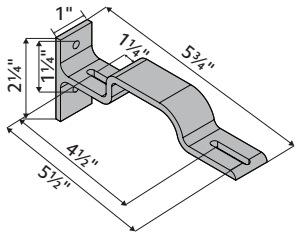


| Fits | Dimensions | Quantity per Box |
|---|---|---|
| 1⅜" Estate™ Traverse Rods<br>2" Estate™ Traverse Rods | Depth: 5¾"<br>Height: 2¼"<br>Width: 1" | 10 pieces per box |

| Product Number & Finish | |
|---|---|
| **71134110** | Satin Brass |

## Double Bracket

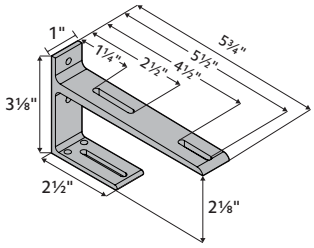


| Fits | Dimensions | Quantity per Box |
|---|---|---|
| 1⅜" Estate™ Traverse Rods<br>2" Estate™ Traverse Rods | Depth: 5¾"<br>Height: 3⅛"<br>Width: 1" | 10 pieces per box |

| Product Number & Finish | | | |
|---|---|---|---|
| **71132062** | Antique Brass | **71132110** | Satin Brass |
| **71132006** | Black | **71132012** | Satin Nickel |

| Item | Product No. & Finish | | Description | Quantity Per Box |
|---|---|---|---|---|
| | **62101000**<br>**62101010** | White<br>Black | AMP Remote Control RF 2W<br>15 Channel | 1 piece per box |
| | **62201300** | White | AMP Battery Charger 16.5V/0.89A | 1 piece per box |
| | **62102000** | White | AMP Gateway USB Bridge | 1 piece per box |
| | **62109000** | White | AMP Wall Switch Surface<br>RF 2W<br>15 Channel | 1 piece per box |
|  | **62108000** | White | AMP Wall Switch RF 2W<br>15 Channel | 1 piece per box |
| | **1026660** | | 15" Cable Assembly | 10 pieces per box |
| | **1026661** | | 4' Cable Assembly | 10 pieces per box |
| | **1026662** | | 10' Cable Assembly | 10 pieces per box |
| | **1026663** | | 20' Cable Assembly | 10 pieces per box |

# 1⅜" Rings

## Ring

| Fits | Dimensions | Quantity per Box |
|---|---|---|
| 1⅜" Wrought Iron Poles | Internal: 2"<br>External: 2½"<br>External to eyelet: 2 13/16" | 10 bags per box - 7 rings per bag |

| Product Number & Finish | | | | | |
|---|---|---|---|---|---|
| **56461770** | Black | **56461804** | Graphite | **56461802** | Iron Oxide |
| **56461803** | Chalk | **56461805** | Heirloom Copper | **56461777** | Rust |

## Bypass C-Ring

| Fits | Dimensions | Quantity per Box |
|---|---|---|
| 1⅜" Wrought Iron Poles | Internal: 2"<br>External: 2½"<br>External to eyelet: 2 13/16" | 10 bags per box - 7 rings per bag |

| Product Number & Finish | | | | | |
|---|---|---|---|---|---|
| **56471770** | Black | **56471804** | Graphite | **56471802** | Iron Oxide |
| **56471803** | Chalk | **56471805** | Heirloom Copper | **56471777** | Rust |



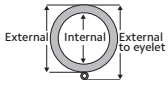


Use the measurement guide to the left to help determine the correct dimensions for your selected product.

# 1⅜" Brackets

## 3½" Return Bracket

| Fits | Dimensions | | Quantity per Box |
|---|---|---|---|
| 1⅜" Wrought Iron Poles | Depth: 4½"<br>Height: 4⅛"<br>Width: 11/16" | Wall to Pole: 3"<br>Return: 3½" | 5 pieces per box |

| Product Number & Finish | | | | | |
|---|---|---|---|---|---|
| **56462770** | Black | **56462804** | Graphite | **56462802** | Iron Oxide |
| **56462803** | Chalk | **56462805** | Heirloom Copper | **56462777** | Rust |

## 5⅜" Return Bracket

| Fits | Dimensions | | Quantity per Box |
|---|---|---|---|
| 1⅜" Wrought Iron Poles | Depth: 6½"<br>Height: 4 5/16"<br>Width: 11/16" | Wall to Pole: 4⅜"<br>Return: 5⅜" | 5 pieces per box |

| Product Number & Finish | | | | | |
|---|---|---|---|---|---|
| **56463770** | Black | **56463804** | Graphite | **56463802** | Iron Oxide |
| **56463803** | Chalk | **56463805** | Heirloom Copper | **56463777** | Rust |

## Center Bypass Bracket

| Fits | Dimensions | | Quantity per Box |
|---|---|---|---|
| 1⅜" Wrought Iron Poles | Depth: 4⅜"<br>Height: 4⅛"<br>Width: 11/16" | Wall to Pole: 3"<br>Return: 3½" | 5 pieces per box |

| Product Number & Finish | | | | | |
|---|---|---|---|---|---|
| **56472770** | Black | **56472804** | Graphite | **56472802** | Iron Oxide |
| **56472803** | Chalk | **56472805** | Heirloom Copper | **56472777** | Rust |

## Double Bracket

| Fits | Dimensions | | Quantity per Box |
|---|---|---|---|
| 1⅜" Wrought Iron Poles | Depth: 7 11/16"<br>Height: 5⅝"<br>Width: ⅝" | Wall to Pole: 1 3/16"<br>Inner Return: 3½"<br>Outer Return: 6½" | 5 pieces per box |

| Product Number & Finish | | | | | |
|---|---|---|---|---|---|
| **56465770** | Black | **56465804** | Graphite | **56465802** | Iron Oxide |
| **56465803** | Chalk | **56465805** | Heirloom Copper | **56465777** | Rust |

Use the measurement guide to the left to help determine the correct dimensions for your selected product.

# 1⅜" Bracket, Accessories & Components

## Inside Mount Socket

| Fits | Dimensions | Quantity per Box |
|---|---|---|
| 1⅜" Wrought Iron Poles | Depth: 1 1/16"<br>Height: 2⅜"<br>Width: 2⅜" | 5 pairs per box |

| Product Number & Finish | | | | | |
|---|---|---|---|---|---|
| **56470770** | Black | **56470804** | Graphite | **56470802** | Iron Oxide |
| **56470803** | Chalk | **56470805** | Heirloom Copper | **56470777** | Rust |

Mounts a 1" rod between two facing walls.

## Swivel Socket

| Fits | Dimensions | Quantity per Box |
|---|---|---|
| 1⅜" Wrought Iron Poles | Partial Length: 2 9/16"<br>Plug Length: 15/16"<br>Full Length: 3½" | 5 pieces per box |

| Product Number & Finish | | | | | |
|---|---|---|---|---|---|
| **56467770** | Black | **56467804** | Graphite | **56467802** | Iron Oxide |
| **56467803** | Chalk | **56467805** | Heirloom Copper | **56467777** | Rust |

## 36" Baton with Bypass C-Ring

| Fits | Dimensions | Quantity per Box |
|---|---|---|
| 1⅜" Wrought Iron Poles | 36" long | 6 pieces per box |

| Product Number & Finish | | | | | |
|---|---|---|---|---|---|
| **56376770** | Black | **56376804** | Graphite | **56376802** | Iron Oxide |
| **56376803** | Chalk | **56376805** | Heirloom Copper | **56376777** | Rust |

## Finial Plug

| Fits | Quantity per Box |
|---|---|
| 1⅜" Wrought Iron Poles | 50 pieces per box |

| Product Number & Finish | |
|---|---|
| **56469058** | White |

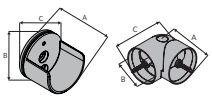

Use the measurement guide to the left to help determine the correct dimensions for your selected product.

# 1" & 1⅜" Accessories & Components

## Internal Rod Splice

| Fits | Quantity per Box |
|---|---|
| 1⅜" Wrought Iron Poles | 5 pieces per box |

| Product Number & Finish | |
|---|---|
| **56466061** | Zinc Plated |

Connects two poles together for larger width options.

## Teflon Tape

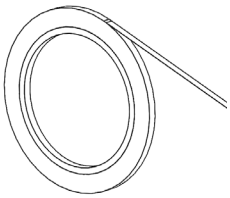

| Dimensions | Quantity per Box |
|---|---|
| 54' per roll | 1 roll per box |

| Product Number & Finish | |
|---|---|
| **84990000** | Clear |

Teflon tape is used on stationary poles to help rings slide smoothly across the pole.

# AMP™ Motorization

## Why AMP™?

The slim design of the quiet, yet powerful motor and the position on the track allows the motor to tuck seamlessly behind your drapery panel so you'll never have to sacrifice your style or comfort. For safety measures, you're able to move the draperies with a gentle tug, allowing for operation when a remote is not present or if a guest is unaware of the motorization feature. The dual battery and AC power sources allows operation in case of a power outage so draperies may be opened in the event of an emergency. AMP™ Motorization is available on our most popular traversing tracks, Estate and Architrac® Series 94001 and in drapery header styles Ripplefold™ and pleated for a variety of styling options. This is comfortable living at its finest.

For AMP™ Motorization brochure, programming instructions and installation instructions, please visit the drapery hardware resource library at kirsch.com.

## Benefits & Features

### AMP™ Motorization

- Motor mounts to the back of the track which allows a seamless look between motorized and manual traverse rods
- Drapery fabrication does not need to change between manually controlled draperies and motorized draperies; No additional returns or any special instructions
- Limits are set automatically after installation
- Remote control is radio frequency and easily pairs with the motor
- Tug feature; when drapery is pulled the motor will traverse the drapery
- AMP™ App with AMP™ USB Bridge
- Architrac® Series 94001 Rods with AMP™ cannot be bent or curved

## Frequently Asked Questions

**What is the weight capacity?**

| | |
|---|---|
| **64 lbs** | Motor is rated to 64 lbs. Be sure not to exceed the Estate or Architrac track specifications to ensure your motor operates optimally. |

**Can you double the weight capacity by using two motors?**

| | |
|---|---|
| **No** | Only use one motor per rod. |

**Does AMP™ offer limit setting?**

| | |
|---|---|
| **Yes** | The motor automatically sets its limits. |

**Does AMP™ offer touch control?**

| | |
|---|---|
| **Yes** | The tug feature allows you to pull on the drapery and the motor will automatically open or close your draperies. |

**How long is the power cord?**

| | |
|---|---|
| **6 ft** | The durable, non-extendable power cord is extra long for out of reach places. Any extra can be rolled and secured for a tidy look. Cable extensions are available in 15", 4', 10' and 20' lengths to reach outlets that are farther away from the motor. |

**Is there a wall switch?**

| | |
|---|---|
| **Yes** | There are Flush Mount and Surface Mount Wall Switches available. |

**Does AMP™ offer a warranty?**

| | |
|---|---|
| **Yes** | See the Kirsch Warranty document for more information. |

### Download the AMP™ APP to get started

Download on the App Store

GET IT ON Google Play

# AMP™ Motorization Overview

## Overview

- Soft start/stop & manual operation
- Tug feature: when drapery is pulled the motor will traverse the drapery
- Automatic limits on end stop
- Favorite/intermediate position
- Dry contact for external control
- RF Remote and wall switches
- Setting with buttons on motor units
- Setting with external dry contact switch
- LED Indicators
- One-Way and Two-Way Draw
- Pleated
- Ripplefold™
- AMP™ App with AMP™ USB Bridge

## Available Colors

White

| Side View | Front View | Bottom View |
|---|---|---|

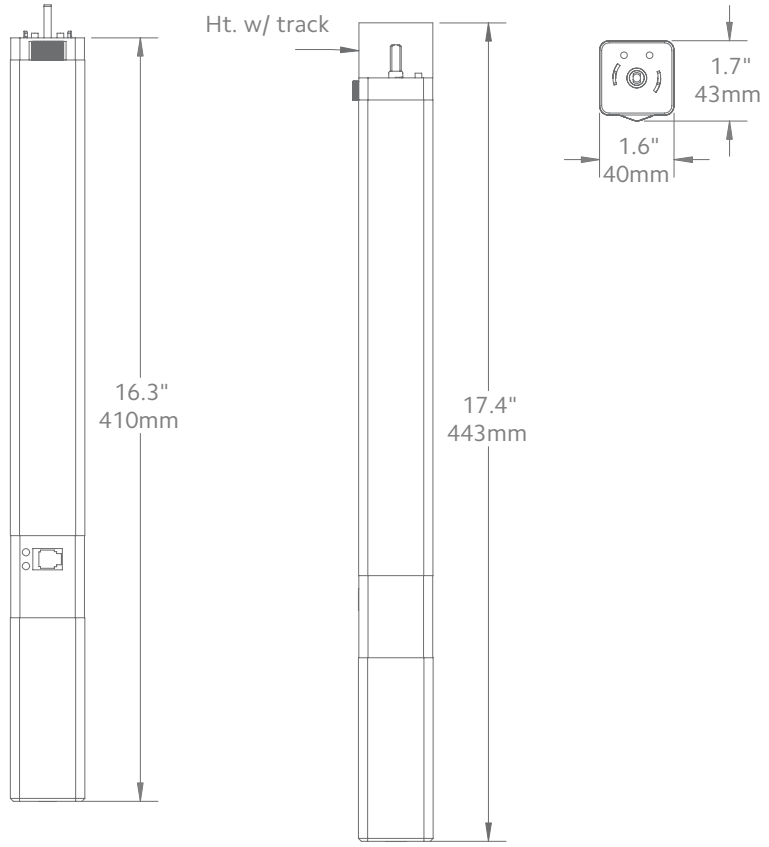


| Motor Unit | Product No. |
|---|---|
| AMP™ Drapery Motor | 62001300 |

| Technical Specs | AMP™ Motor |
|---|---|
| Power Supply | DC 16.5V-0.89A (100-240VAC 50/60Hz 0.5A) |
| Amperage | 2.55Ah |
| Average Linear Speed | 7.8inches/sec |
| Power Consumption | 40 watts |
| Torque | 1.2Nm |
| Power Cable Length | 6 feet |
| Variable Speed | 80, 100 & 120 rpm |
| Certifications | UL/CE |
| Max. Track Length | Estate™ - 16 ft<br>Architrac™ 94001 - 16 ft |
| Max. Load | 64 lbs |

Follow track specifications for drapery weight.

# Estate™ Overview

To help determine which system is right for your project, use the guideline below to select the best fit. For more detailed information about each track, please visit our resource library at kirsch.com.

| Estate™ Series | Designer Metals™ | Wood Trends™ | Wrought Iron |
|---|---|---|---|
| **What is your preferred size?** | | | |
| 1⅜" | • | • | • |
| 2" | • | • | |
| **What is your preferred Draw type?** | | | |
| Motorized | • | • | • |
| Manual | • | • | • |
| **What is your preferred Drapery Heading type?** | | | |
| Pleated | • | • | • |
| Ripplefold™ | • | • | • |
| **What is your mounting location?** | | | |
| Ceiling Mount* | • | • | • |
| Wall Mount | • | • | • |

*Finial choices may be limited for ceiling mounted Estate™ Rods.

### Track Performance Data

| Style | Heading Style | Mount | Draw | Minimum Track Length | Maximum Track Length | Minimum Fabric Weight | Lbs. per Ft. |
|---|---|---|---|---|---|---|---|
| 83611<br>1⅜" Estate™<br>Manual or Motorized Draw | Pleated, Ripplefold™ | Ceiling, Wall | One-Way | 18 in | 16 ft | 64 lbs | 4 |
| | | | Two-Way | 18 in | 16 ft | 64 lbs | 4 |
| 93601<br>2" Estate™<br>Manual or Motorized Draw | Pleated, Ripplefold™ | Ceiling, Wall | One-Way | 18 in | 16 ft | 64 lbs | 4 |
| | | | Two-Way | 18 in | 16 ft | 64 lbs | 4 |

*Maximum track lengths and maximum fabric weight do not apply to curved track. Check with customer service for feasibility. Send complete specifications and fabric weight.

### Splices & Keystones per Track

| Track Length | Number of Splices | Keystones Included |
|---|---|---|
| 8 ft. to 16 ft. | 1 | 1 |

# Operating Systems

## Motorized Draw

### AMP™ Motorization

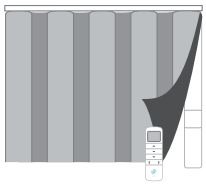

- Easy to use
- Quiet, powerful motor
- Pleated or Ripplefold™
- For Estate™ Traverse Rods or Architrac® Series 94001
- For more information, see page 28

## Manual Draw

### Cord Draw

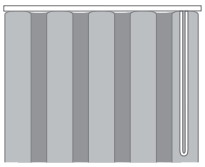

- Easy to use
- Pleated or Ripplefold™

### Hand/Baton Draw

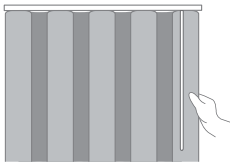

- Easy to use
- A gentle tug allows drapery to glide across track
- Pleated or Ripplefold™

### Baton Duplex Draw

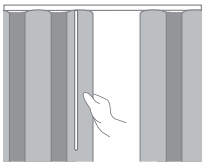

- Easy to use
- Used on split draw rods
- Pleated or Ripplefold™
- When the baton is pulled on one stack, draperies on both sides of the traverse rod open or close

# Header Styles

### Ripplefold™

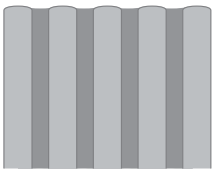

- Panels can be pressed flat, yet fall into fold
- No hooks or pins
- Headings are suspended under track
- Stack back is less than conventional pleated draperies
- Draperies snap on/off carriers for easy installation
- Interior drapery appearance is identical to exterior-facing appearance

### Pleated

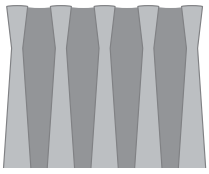

- A classic header option
- Can be used with most track systems using slip-in or pin-on hooks
- Headings can be suspended under the track or over the face of the track to conceal hardware
- Four carriers per foot is standard, additional carriers or rings can be ordered

# Bracket Spacing & Mount Options

Place brackets at each end. On the ends where the drapery will stack, place the next bracket at a maximum of 24" from the first bracket, then place remaining brackets at 48" intervals over the remainder of the track. Spacing may need to be shortened for heavier draperies. All mounting options are compatible with our AMP™ Motorization.

## Wall Mount using parts:

To achieve this look, order Estate rod, wall mount and all components will be included.

**94129061**
Zinc

or

**1856973**
Satin Nickel

or

**1856978**
Brushed Bronze

or

**1857324**
Black

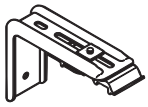

### 1⅜" Wall Mount

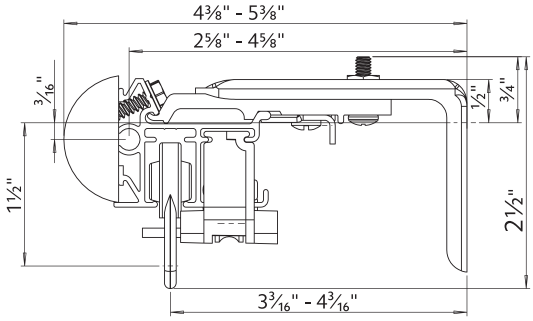


## Ceiling Mount using parts:

To achieve this look, order Estate rod, ceiling mounted. 94130xxx brackets are included with the rod. Then order item 1796061 ceiling mount bracket in the quantity needed based on the bracket spacing drawing on page 32.

**94130xxx**

&

**1796061**

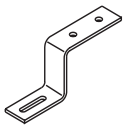

### 1⅜" Ceiling Mount

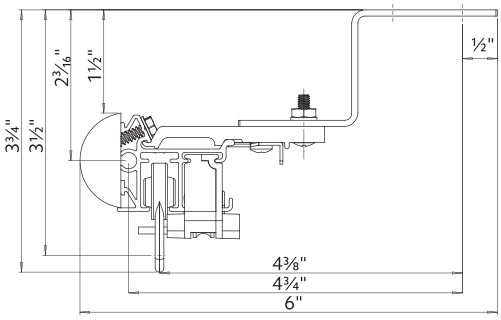

## Double Wall Mount using parts:

To achieve this look, order Estate rod, ceiling mounted. 94130xxx brackets are included with the rod. Then order one, item 94125xxx double bracket and two, item 1796061 ceiling mount brackets multiplied by the quantity needed based on the bracket spacing drawing on page 32.

**94125xxx** & **1796061** & **94130xxx**

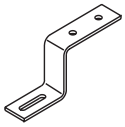

### 1⅜" Double Wall Mount

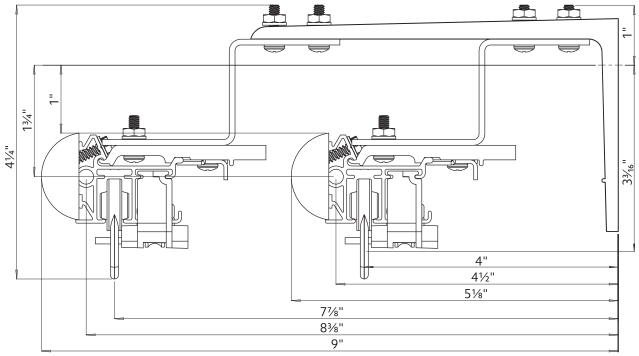


## Double Wall Mount using parts:

To achieve this look, order Estate rod ceiling mounted. 94130xxx brackets are included with the rod. Then order one, item 71134110 double bracket in the quantity needed based on the bracket spacing drawing on page 32.

**71134110** & **94130xxx**

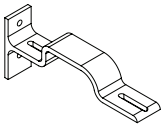

### 1⅜" Front & 1⅜" Back Double Wall Mount

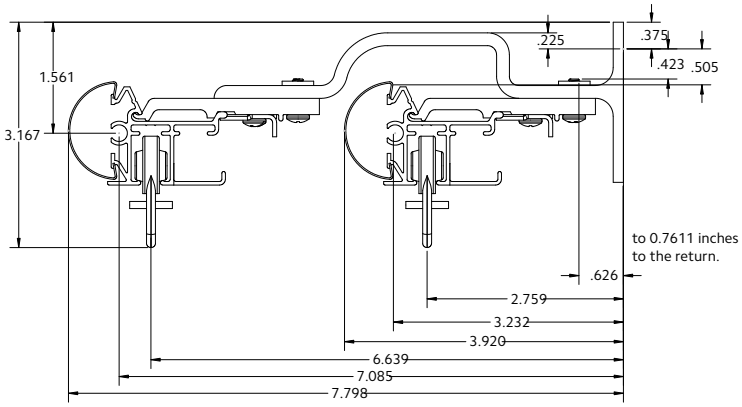

# Calculating Drapery Weight

**1. Fabric Weight**

Some fabric samples list on the back of the swatch the weight listed in Ounces/SqYd (ounces per square yard). Call the manufacturer for the weight if not listed.

**2. Lining Weight**

Most drapery linings are 2oz - 4oz per square yard.

**Drapery Weight Formula**

| | |
|---|---|
| **Total Square Yards** | = (total yards x 36 x fabric width) ÷ 1296 (1-square yard) |
| **Weight** | = total square yards x weight in ounces per SqYd) ÷ 16 oz in lb |
| **Example** | 32 yards of 54" wide fabric weighing 14 oz/SqYd<br>Total square yards = (32 x 36 x 54) = 62,208 ÷ 1296 = 48 SqYds<br>Weight = (48 x 14oz) = 672 ÷ 16 = 42 lbs |

**Lining Weight Formula**

| | |
|---|---|
| **Total Square Yards** | = (total yards x 36 x fabric width) ÷ 1296 (1-square yard) |
| **Weight** | = total square yards x weight in ounces per SqYd) ÷ 16 oz in lb |
| **Example** | 32 yards of 54" wide fabric weighing 6 oz/SqYd<br>Total square yards = (32 x 36 x 54) = 62,208 ÷ 1296 = 48 SqYds<br>Weight = (48 x 4oz) = 192 ÷ 16 = 12 lbs |

**Fabrics by Weight**

Contact the fabric manufacturer for your specific fabric weight.

| Fabric Type | Weight per Square Yard |
|---|---|
| Drapery Lining | 2-4oz |
| Interlining | 5-6oz |
| Blackout Lining | 6-10oz |
| Bump Lining | 12-14oz |
| Silks | 2-4oz |
| Chintz | 2-4oz |
| Printed Cottons | 4-6oz |
| Linens | 6-10oz |
| Jacquards | 10-14oz |
| Velvets | 14-18oz |

# Stack Guides

## Pleated Stack Guide (for 16 mm carriers)

Note: Stack size is estimated. Type of fabric used could alter these measurements.

| Size of Track (in inches) | 5 carriers per foot 3x fullness | | 4 carriers per foot 2½x fullness | | 3 carriers per foot 2x fullness | |
|---|---|---|---|---|---|---|
| | Stackback One-Way | Stackback Two-Way (per side) | Stackback One-Way | Stackback Two-Way (per side) | Stackback One-Way | Stackback Two-Way (per side) |
| 18 | 11.75 | 8.75 | 10.5 | 8.5 | 10.5 | 8.5 |
| 24 | 13 | 9.25 | 11.75 | 8.75 | 10.5 | 8.5 |
| 30 | 15.75 | 10.5 | 13 | 9.25 | 11.75 | 8.75 |
| 36 | 17 | 11.25 | 14.5 | 10 | 13 | 9.25 |
| 42 | 18.5 | 12 | 15.75 | 10.5 | 14.5 | 10 |
| 48 | 19.75 | 12.5 | 17 | 11.25 | 14.5 | 10 |
| 54 | 22.25 | 14 | 18.5 | 12 | 15.75 | 10.5 |
| 60 | 23.75 | 14.5 | 19.75 | 12.5 | 17 | 11.25 |
| 66 | 25 | 15.25 | 21 | 13.25 | 18.5 | 12 |
| 72 | 26.25 | 16 | 22.25 | 14 | 18.5 | 12 |
| 78 | 29 | 17.25 | 23.75 | 14.5 | 19.75 | 12.5 |
| 84 | 30.25 | 18 | 25 | 15.25 | 21 | 13.25 |
| 90 | 31.5 | 18.5 | 26.25 | 16 | 22.25 | 14 |
| 96 | 33 | 19.25 | 27.5 | 16.5 | 22.25 | 14 |
| 102 | 35.5 | 20.5 | 29 | 17.25 | 23.75 | 14.5 |
| 108 | 36.75 | 21.25 | 30.25 | 18 | 25 | 15.25 |
| 114 | 38.25 | 21.75 | 31.5 | 18.5 | 26.25 | 16 |
| 120 | 39.5 | 22.5 | 33 | 19.25 | 26.25 | 16 |
| 126 | 42.25 | 23.75 | 34.25 | 19.75 | 27.5 | 16.5 |
| 132 | 43.5 | 24.5 | 35.5 | 20.5 | 29 | 17.25 |
| 138 | 44.75 | 25.25 | 36.75 | 21.25 | 30.25 | 18 |
| 144 | 46 | 25.75 | 38.25 | 21.75 | 30.25 | 18 |
| 150 | 48.75 | 27 | 39.5 | 22.5 | 31.5 | 18.5 |
| 156 | 50 | 27.75 | 40.75 | 23.25 | 33 | 19.25 |
| 162 | 51.5 | 28.5 | 42.25 | 23.75 | 34.25 | 19.75 |
| 168 | 52.75 | 29 | 43.5 | 24.5 | 34.25 | 19.75 |
| 174 | 55.25 | 30.5 | 44.75 | 25.25 | 35.5 | 20.5 |
| 180 | 56.75 | 31 | 46 | 25.75 | 36.75 | 21.25 |
| 186 | 58 | 31.75 | 47.5 | 26.5 | 38.25 | 21.75 |
| 192 | 59.25 | 32.5 | 48.75 | 27 | 38.25 | 21.75 |
| 198 | 62 | 33.75 | 50 | 27.75 | 39.5 | 22.5 |
| 204 | 63.25 | 34.5 | 51.5 | 28.5 | 40.75 | 23.25 |
| 210 | 64.5 | 35 | 52.75 | 29 | 42.25 | 23.75 |
| 216 | 66 | 35.75 | 54 | 29.75 | 42.25 | 23.75 |
| 222 | 68.5 | 37 | 55.25 | 30.5 | 43.5 | 24.5 |
| 228 | 69.75 | 37.75 | 56.75 | 31 | 44.75 | 25.25 |
| 234 | 71.25 | 38.25 | 58 | 31.75 | 46 | 25.75 |
| 240 | 72.5 | 39 | 59.25 | 32.5 | 46 | 25.75 |

# Ripplefold™ Stack Guide for Butt Master 84111xxx

Note: Stack size is estimated. Type of fabric used could alter these measurements. Please refer to the Ripplefold Fabrication Manual for more information.

| 120% Fullness | 100% Fullness | 80% Fullness | 60% Fullness | Number of factory snaps | Snap Tape Length (less return length)* | Panel Stackback |
|---|---|---|---|---|---|---|
| 13⅝ | 15⅜ | 17⅛ | 18⅞ | 8 | 32½ | 5½ |
| 17⅜ | 19⅝ | 21⅞ | 24⅛ | 10 | 41 | 6½ |
| 21⅛ | 23⅞ | 26⅝ | 29⅜ | 12 | 49½ | 7½ |
| 24⅞ | 28⅛ | 31⅜ | 34⅝ | 14 | 58 | 8¾ |
| 28⅝ | 32⅜ | 36⅛ | 39⅞ | 16 | 66½ | 9¾ |
| 32⅜ | 36⅝ | 40⅞ | 45⅛ | 18 | 75 | 11 |
| 36⅛ | 40⅞ | 45⅝ | 50⅜ | 20 | 83½ | 12 |
| 39⅞ | 45⅛ | 50⅜ | 55⅝ | 22 | 92 | 13 |
| 45⅝ | 49⅜ | 55⅛ | 60⅞ | 24 | 100½ | 14¼ |
| 47⅜ | 53⅝ | 59⅞ | 66⅛ | 26 | 109 | 15¼ |
| 51⅛ | 57⅞ | 64⅝ | 71⅜ | 28 | 117½ | 16½ |
| 54⅞ | 62⅛ | 69⅜ | 76⅝ | 30 | 126 | 17½ |
| 58⅝ | 66⅜ | 74⅛ | 81⅞ | 32 | 134½ | 18½ |
| 62⅜ | 70⅝ | 78⅞ | 87⅛ | 34 | 143 | 19¾ |
| 66⅛ | 74⅞ | 83⅝ | 92⅜ | 36 | 151½ | 20¾ |
| 69⅞ | 79⅛ | 88⅜ | 97⅝ | 38 | 160 | 22 |
| 73⅝ | 83⅜ | 93⅛ | 102⅞ | 40 | 168½ | 23 |
| 77⅜ | 87⅝ | 97⅞ | 108⅛ | 42 | 177 | 24 |
| 81⅛ | 91⅞ | 102⅝ | 113⅜ | 44 | 185½ | 25¼ |
| 84⅞ | 96⅛ | 107⅜ | 118⅝ | 46 | 194 | 26¼ |
| 88⅝ | 100⅜ | 112⅛ | 123⅞ | 48 | 202½ | 27½ |
| 92⅜ | 104⅝ | 116⅞ | 129⅛ | 50 | 211 | 28½ |
| 96⅛ | 108⅞ | 121⅝ | 134⅜ | 52 | 219½ | 29½ |
| 99⅞ | 113⅛ | 126⅜ | 139⅝ | 52 | 228 | 30¾ |
| 103⅝ | 117⅜ | 131⅛ | 144⅞ | 54 | 236½ | 31¾ |
| 107⅜ | 121⅝ | 135⅞ | 150⅛ | 56 | 245 | 33 |
| 111⅛ | 125⅞ | 140⅝ | 155⅜ | 58 | 253½ | 34 |
| 114⅞ | 130⅛ | 145⅜ | 160⅝ | 60 | 262 | 35 |
| 118⅝ | 134⅜ | 150⅛ | 165⅞ | 62 | 270½ | 36¼ |
| 122⅜ | 138⅝ | 154⅞ | 171⅛ | 64 | 279 | 37¼ |
| 126⅛ | 142⅞ | 159⅝ | 176⅜ | 66 | 287½ | 38½ |
| 129⅞ | 147⅛ | 164⅜ | 181⅝ | 68 | 296 | 39 ½ |
| 133⅝ | 151⅜ | 169⅛ | 186⅞ | 70 | 304½ | 40½ |
| 137⅜ | 155⅝ | 173⅞ | 192⅛ | 72 | 313 | 41¾ |
| 141⅛ | 159⅞ | 178⅝ | 197⅜ | 74 | 321½ | 42¾ |
| 144⅞ | 164⅛ | 183⅜ | 202⅝ | 76 | 330 | 44 |

# Ripplefold™ Stack Guide for Butt Master 84111xxx

Note: Stack size is estimated. Type of fabric used could alter these measurements. Please refer to the Ripplefold Fabrication Manual for more information.

| 120% Fullness | 100% Fullness | 80% Fullness | 60% Fullness | Number of factory snaps | Snap Tape Length (less return length)* | Panel Stackback |
|---|---|---|---|---|---|---|
| 148⅝ | 168⅜ | 188⅛ | 207⅞ | 78 | 338½ | 45 |
| 152⅜ | 176⅝ | 192⅞ | 213⅛ | 80 | 347 | 46 |
| 156⅛ | 176⅞ | 197⅝ | 218⅜ | 84 | 355½ | 47¼ |
| 159⅞ | 181⅛ | 202⅜ | 223⅝ | 86 | 364 | 48¼ |
| 163⅝ | 185⅜ | 207⅛ | 228⅞ | 88 | 372½ | 49½ |
| 167⅜ | 189⅝ | 211⅞ | 234⅛ | 90 | 381 | 50½ |
| 171⅛ | 193⅞ | 216⅝ | 239⅜ | 92 | 389½ | 51½ |
| 174⅞ | 198⅛ | 221⅜ | 244⅝ | 94 | 398 | 52¾ |
| 178⅝ | 202⅜ | 226⅛ | 249⅞ | 96 | 406½ | 53¾ |
| 182⅜ | 206⅝ | 230⅞ | 255⅛ | 98 | 415 | 55 |
| 186⅛ | 210⅞ | 235⅝ | 260⅜ | 100 | 423½ | 56 |
| 189⅞ | 215⅛ | 240⅜ | 265⅝ | 102 | 432 | 57 |
| 193⅝ | 219⅜ | 245⅛ | 270⅞ | 104 | 440½ | 58¼ |
| 197⅜ | 223⅝ | 249⅞ | 276⅛ | 106 | 449 | 59¼ |
| 201⅛ | 227⅞ | 254⅝ | 281⅜ | 108 | 457½ | 60½ |
| 204⅞ | 232⅛ | 259⅜ | 286⅝ | 110 | 466 | 61½ |
| 208⅝ | 236⅜ | 264⅛ | 291⅞ | 112 | 474½ | 62 ½ |
| 212⅜ | 240⅝ | 268⅞ | 297⅛ | 114 | 483 | 63¾ |
| 216⅛ | 244⅞ | 273⅝ | 302⅜ | 116 | 491½ | 64¾ |
| 219⅞ | 249⅛ | 278⅜ | 307⅝ | 118 | 500 | 66 |
| 223⅝ | 253⅜ | 283⅛ | 312⅞ | 120 | 508½ | 67 |
| 227⅜ | 257⅝ | 287⅞ | 318⅛ | 122 | 517 | 68 |
| 231⅛ | 261⅞ | 292⅝ | 323⅜ | 124 | 525½ | 69¼ |
| 234⅞ | 266⅛ | 297⅜ | 328⅝ | 126 | 534 | 70¼ |
| 238⅝ | 270⅜ | 302⅛ | 333⅞ | 128 | 542½ | 71½ |
| 242⅜ | 274⅝ | 306⅞ | 339⅛ | 130 | 551 | 72½ |
| 246⅛ | 278⅞ | 311⅝ | 344⅜ | 132 | 559½ | 73½ |
| 249⅞ | 283⅛ | 316⅜ | 349⅝ | 134 | 568 | 74¾ |
| 253⅝ | 287⅜ | 321⅛ | 354⅞ | 136 | 576½ | 75¾ |
| 257⅜ | 291⅝ | 325⅞ | 360⅛ | 138 | 585 | 77 |
| 261⅛ | 295⅞ | 330⅝ | 365⅜ | 140 | 593½ | 78 |
| 264⅞ | 300⅛ | 335⅜ | 370⅝ | 142 | 602 | 79 |
| 268⅝ | 304⅜ | 340⅛ | 375⅞ | 144 | 610½ | 80¼ |
| 272⅜ | 308⅝ | 344⅞ | 381⅛ | 146 | 619 | 81¼ |
| 276⅛ | 312⅞ | 349⅝ | 386⅜ | 148 | 627½ | 82½ |
| 279⅞ | 317⅛ | 354⅜ | 391⅝ | 150 | 636 | 83½ |

# Ripplefold™ Stack Guide for Butt Master 84214xxx

**Note: Stack size is estimated. Type of fabric used could alter these measurements. Please refer to the Ripplefold Fabrication Manual for more information.**

| 120% Fullness | 100% Fullness | 80% Fullness | 60% Fullness | Number of factory snaps | Snap Tape Length (less return length)* | Panel Stackback |
|---|---|---|---|---|---|---|
| 14⅞ | 16⅜ | 17⅞ | 19⅜ | 8 | 32½ | 7½ |
| 18⅝ | 20⅝ | 22⅝ | 24⅝ | 10 | 41 | 8½ |
| 22⅜ | 24⅞ | 27⅜ | 29⅞ | 12 | 49½ | 9¾ |
| 26⅛ | 29⅛ | 32⅛ | 35⅛ | 14 | 58 | 10¾ |
| 29⅞ | 33⅜ | 36⅞ | 40⅜ | 16 | 66½ | 12 |
| 33⅝ | 37⅝ | 41⅝ | 45⅝ | 18 | 75 | 13 |
| 37⅜ | 41⅞ | 46⅜ | 50⅞ | 20 | 83½ | 14 |
| 41⅛ | 46⅛ | 51⅛ | 56⅛ | 22 | 92 | 15¼ |
| 44⅞ | 50⅜ | 55⅞ | 61⅜ | 24 | 100½ | 16¼ |
| 48⅝ | 54⅝ | 60⅝ | 66⅝ | 26 | 109 | 17½ |
| 52⅜ | 58⅞ | 65⅜ | 71⅞ | 28 | 117½ | 18½ |
| 56⅛ | 63⅛ | 70⅛ | 77⅛ | 30 | 126 | 19½ |
| 59⅞ | 67⅜ | 74⅞ | 82⅜ | 32 | 134½ | 20¾ |
| 63⅝ | 71⅝ | 79⅝ | 87⅝ | 34 | 143 | 21¾ |
| 67⅜ | 75⅞ | 84⅜ | 92⅞ | 36 | 151½ | 23 |
| 71⅛ | 80⅛ | 89⅛ | 98⅛ | 38 | 160 | 24 |
| 74⅞ | 84⅜ | 93⅞ | 103⅜ | 40 | 168½ | 25 |
| 78⅝ | 88⅝ | 98⅝ | 108⅝ | 42 | 177 | 26¼ |
| 82⅜ | 92⅞ | 103⅜ | 113⅞ | 44 | 185½ | 27¼ |
| 86⅛ | 97⅛ | 108⅛ | 119⅛ | 46 | 194 | 28½ |
| 89⅞ | 101⅜ | 112⅞ | 124⅜ | 48 | 202½ | 29½ |
| 93⅝ | 105⅝ | 117⅝ | 129⅝ | 50 | 211 | 30½ |
| 97⅜ | 109⅞ | 122⅜ | 134⅞ | 52 | 219½ | 31¾ |
| 101⅛ | 114⅛ | 127⅛ | 140⅛ | 54 | 228 | 32¾ |
| 104⅞ | 118⅜ | 131⅞ | 145⅜ | 56 | 236½ | 34 |
| 108⅝ | 122⅝ | 136⅝ | 150⅝ | 56 | 245 | 35 |
| 112⅜ | 126⅞ | 141⅜ | 155⅞ | 60 | 253½ | 36¼ |
| 116⅛ | 131⅛ | 146⅛ | 161⅛ | 62 | 262 | 37¼ |
| 119⅞ | 135⅜ | 150⅞ | 166⅜ | 64 | 270½ | 38¼ |
| 123⅝ | 139⅝ | 155⅝ | 171⅝ | 66 | 279 | 39½ |
| 127⅜ | 143⅞ | 160⅜ | 176⅞ | 68 | 287½ | 40½ |
| 131⅛ | 148⅛ | 165⅛ | 182⅛ | 70 | 296 | 41¾ |
| 134⅞ | 152⅜ | 169⅞ | 187⅜ | 72 | 304½ | 42¾ |
| 138⅝ | 156⅝ | 174⅝ | 192⅝ | 74 | 313 | 43¾ |
| 142⅜ | 160⅞ | 179⅜ | 197⅞ | 76 | 321½ | 45 |
| 146⅛ | 165⅛ | 184⅛ | 203⅛ | 78 | 330 | 46 |

# Ripplefold™ Stack Guide for Butt Master 84214xxx

Note: Stack size is estimated. Type of fabric used could alter these measurements. Please refer to the Ripplefold Fabrication Manual for more information.

| 120% Fullness | 100% Fullness | 80% Fullness | 60% Fullness | Number of factory snaps | Snap Tape Length (less return length)* | Panel Stackback |
|---|---|---|---|---|---|---|
| 149⅞ | 169⅜ | 188⅞ | 208⅜ | 80 | 338½ | 47¼ |
| 153⅝ | 173⅝ | 193⅝ | 213⅝ | 82 | 347 | 48¼ |
| 157⅜ | 177⅞ | 198⅜ | 218⅞ | 84 | 355½ | 49½ |
| 161⅛ | 182⅛ | 203⅛ | 224⅛ | 86 | 364 | 50½ |
| 164⅞ | 186⅜ | 207⅞ | 229⅜ | 88 | 372½ | 51½ |
| 168⅝ | 190⅝ | 212⅝ | 234⅝ | 90 | 381 | 52¾ |
| 172⅜ | 194⅞ | 217⅜ | 239⅞ | 92 | 389½ | 53¾ |
| 176⅛ | 199⅛ | 222⅛ | 245⅛ | 94 | 398 | 55 |
| 179⅞ | 203⅜ | 226⅞ | 250⅜ | 96 | 406½ | 56 |
| 183⅝ | 207⅝ | 231⅝ | 255⅝ | 98 | 415 | 57 |
| 187⅜ | 211⅞ | 236⅜ | 260⅞ | 100 | 423½ | 58¼ |
| 191⅛ | 216⅛ | 241⅛ | 266⅛ | 102 | 432 | 59¼ |
| 194⅞ | 220⅜ | 245⅞ | 271⅜ | 104 | 440½ | 60½ |
| 198⅝ | 224⅝ | 250⅝ | 276⅝ | 106 | 449 | 61½ |
| 202⅜ | 228⅞ | 255⅜ | 281⅞ | 108 | 457½ | 62½ |
| 206⅛ | 233⅛ | 260⅛ | 287⅛ | 110 | 466 | 63¾ |
| 209⅞ | 237⅜ | 264⅞ | 292⅜ | 112 | 474½ | 64¾ |
| 213⅝ | 241⅝ | 269⅝ | 297⅝ | 114 | 483 | 66 |
| 217⅜ | 245⅞ | 274⅜ | 302⅞ | 116 | 491½ | 67 |
| 221⅛ | 250⅛ | 279⅛ | 308⅛ | 118 | 500 | 68¼ |
| 224⅞ | 254⅜ | 283⅞ | 313⅜ | 120 | 508½ | 69¼ |
| 228⅝ | 258⅝ | 288⅝ | 318⅝ | 122 | 517 | 70¼ |
| 232⅜ | 262⅞ | 293⅜ | 323⅞ | 124 | 525½ | 71½ |
| 236⅛ | 267⅛ | 298⅛ | 329⅛ | 126 | 534 | 72½ |
| 239⅞ | 271⅜ | 302⅞ | 334⅜ | 128 | 542½ | 73¾ |
| 243⅝ | 275⅝ | 307⅝ | 339⅝ | 130 | 551 | 74¾ |
| 247⅜ | 279⅞ | 312⅜ | 344⅞ | 132 | 559½ | 75¾ |
| 251⅛ | 284⅛ | 317⅛ | 350⅛ | 134 | 568 | 77 |
| 254⅞ | 288⅜ | 321⅞ | 355⅜ | 136 | 576½ | 78 |
| 258⅝ | 292⅝ | 326⅝ | 360⅝ | 138 | 585 | 79¼ |
| 262⅜ | 296⅞ | 331⅜ | 365⅞ | 140 | 593½ | 80¼ |
| 266⅛ | 301⅛ | 336⅛ | 371⅛ | 142 | 602 | 81¼ |
| 269⅞ | 305⅜ | 340⅞ | 376⅜ | 144 | 610½ | 82½ |
| 273⅝ | 309⅝ | 345⅝ | 381⅝ | 146 | 619 | 83½ |
| 277⅜ | 313⅞ | 350⅜ | 386⅞ | 148 | 627½ | 84¾ |
| 281⅛ | 318⅛ | 355⅛ | 392⅛ | 150 | 636 | 85¾ |

# Ripplefold™ Overlap Stack Guide

Note: Stack size is estimated. Type of fabric used could alter these measurements. Please refer to the Ripplefold Fabrication Manual for more information.

| 120% Fullness | 100% Fullness | 80% Fullness | 60% Fullness | Number of factory snaps | Snap Tape Length (less return length)* | Panel Stackback |
|---|---|---|---|---|---|---|
| 16¼ | 17¾ | 19⅛ | 20¾ | 8 | 34 | 9 |
| 20 | 22 | 23⅞ | 26 | 10 | 42½ | 10¼ |
| 23¾ | 26¼ | 28⅝ | 31¼ | 12 | 51 | 11¼ |
| 27½ | 20½ | 33⅜ | 26½ | 14 | 59½ | 12½ |
| 31¼ | 34¾ | 38⅛ | 41¾ | 16 | 68 | 13½ |
| 35 | 39 | 42⅞ | 47 | 18 | 76½ | 14½ |
| 38¾ | 43¼ | 47⅝ | 52¼ | 20 | 85 | 15¾ |
| 42½ | 47½ | 52⅜ | 57½ | 22 | 93½ | 16¾ |
| 46¼ | 51¾ | 57⅛ | 62¾ | 24 | 102 | 18 |
| 50 | 56 | 61⅞ | 68 | 26 | 110½ | 19 |
| 53¾ | 60¼ | 66⅝ | 73¼ | 28 | 119 | 20 |
| 57½ | 64½ | 71⅜ | 78½ | 30 | 127½ | 21¼ |
| 61¼ | 68¾ | 76⅛ | 83¾ | 32 | 136 | 22¼ |
| 65 | 73 | 80⅞ | 89 | 34 | 144½ | 23½ |
| 68¾ | 77¼ | 85⅝ | 94¼ | 36 | 153 | 24½ |
| 72½ | 81½ | 90⅜ | 99½ | 38 | 161½ | 25½ |
| 76¼ | 85¾ | 95⅛ | 104¾ | 40 | 170 | 26¾ |
| 80 | 90 | 99⅞ | 110 | 42 | 178½ | 27¾ |
| 83¾ | 94¼ | 104⅝ | 115¼ | 44 | 187 | 29 |
| 87½ | 98½ | 109⅜ | 120½ | 46 | 195½ | 30 |
| 91¼ | 102¾ | 114⅛ | 125¾ | 48 | 204 | 31 |
| 95 | 107 | 118⅞ | 131 | 50 | 212½ | 32¼ |
| 98¾ | 111¼ | 123⅝ | 136¼ | 52 | 221 | 33¼ |
| 102½ | 115½ | 128⅜ | 141½ | 54 | 229½ | 34½ |
| 106¼ | 119¾ | 133⅛ | 146¾ | 56 | 238 | 35½ |
| 110 | 124 | 137⅞ | 152 | 56 | 246½ | 36½ |
| 113¾ | 128¼ | 142⅝ | 157¼ | 60 | 255 | 37¾ |
| 117½ | 132½ | 147⅜ | 162½ | 62 | 263½ | 38¾ |
| 121¼ | 136¾ | 152⅛ | 167¾ | 64 | 272 | 40 |
| 125 | 141 | 156⅞ | 173 | 66 | 280½ | 41 |
| 128¾ | 145¼ | 161⅝ | 178¼ | 68 | 289 | 42 |
| 132½ | 149½ | 166⅜ | 183½ | 70 | 297½ | 43¼ |
| 136¼ | 153¾ | 171⅛ | 188¾ | 72 | 306 | 44¼ |
| 140 | 158 | 175⅞ | 194 | 74 | 314½ | 45½ |
| 143¾ | 162¼ | 180⅝ | 199¼ | 76 | 323 | 46½ |
| 147½ | 166½ | 185⅜ | 204½ | 78 | 331½ | 47½ |

# Ripplefold™ Overlap Stack Guide

Note: Stack size is estimated. Type of fabric used could alter these measurements. Please refer to the Ripplefold Fabrication Manual for more information.

| 120% Fullness | 100% Fullness | 80% Fullness | 60% Fullness | Number of factory snaps | Snap Tape Length (less return length)* | Panel Stackback |
|---|---|---|---|---|---|---|
| 151¼ | 170¼ | 190⅛ | 209¾ | 80 | 340 | 48¾ |
| 155 | 175 | 194⅞ | 215 | 82 | 348½ | 49¾ |
| 158¾ | 179¼ | 199⅝ | 220¼ | 84 | 357 | 51 |
| 162½ | 183½ | 204⅜ | 225½ | 86 | 365½ | 52 |
| 166¼ | 187¾ | 209⅛ | 230¾ | 88 | 374 | 53 |
| 170 | 192 | 213⅞ | 236 | 90 | 382½ | 54¼ |
| 173¾ | 196¼ | 218⅝ | 241¼ | 92 | 391 | 55¼ |
| 177½ | 200½ | 223⅜ | 246½ | 94 | 399½ | 56½ |
| 181¼ | 204¾ | 228⅛ | 251¾ | 96 | 408 | 57½ |
| 185 | 209 | 232⅞ | 257 | 98 | 416½ | 58½ |
| 188¾ | 213¼ | 237⅝ | 262¼ | 100 | 425 | 59¾ |
| 192½ | 217½ | 242⅜ | 267½ | 102 | 433½ | 60¾ |
| 196¼ | 221¾ | 247⅛ | 272¾ | 104 | 442 | 62 |
| 200 | 226 | 251⅞ | 278 | 106 | 450½ | 63 |
| 203¾ | 230¼ | 256⅝ | 283¼ | 108 | 459 | 64 |
| 207½ | 234½ | 261⅜ | 288½ | 110 | 467½ | 65¼ |
| 211¼ | 238¾ | 266⅛ | 293¾ | 112 | 476 | 66¼ |
| 215 | 243 | 270⅞ | 299 | 114 | 484½ | 67½ |
| 218¾ | 247¼ | 275⅝ | 304¼ | 116 | 493 | 68½ |
| 222½ | 251½ | 280⅜ | 309½ | 118 | 501½ | 69½ |
| 226¼ | 255¾ | 285⅛ | 314¾ | 120 | 510 | 70¾ |
| 230 | 260 | 289⅞ | 320 | 122 | 518½ | 71¾ |
| 233¾ | 264¼ | 294⅝ | 325¼ | 124 | 527 | 73 |
| 237½ | 268½ | 299⅜ | 330½ | 126 | 535½ | 74 |
| 241¼ | 272¾ | 304⅛ | 335¾ | 128 | 544 | 75 |
| 245 | 277 | 308⅞ | 341 | 130 | 552½ | 76¼ |
| 248¾ | 281¼ | 313⅝ | 346¼ | 132 | 561 | 77¼ |
| 252½ | 285½ | 318⅜ | 351½ | 134 | 569½ | 78½ |
| 256¼ | 289¾ | 323⅛ | 356¾ | 136 | 578 | 79½ |
| 260 | 294 | 327⅞ | 362 | 138 | 586½ | 80½ |
| 263¾ | 298¼ | 332⅝ | 367¼ | 140 | 595 | 81¾ |
| 267½ | 302½ | 337⅜ | 372½ | 142 | 603½ | 82¾ |
| 271¼ | 306¾ | 342⅛ | 377¾ | 144 | 612 | 84 |
| 275 | 311 | 346⅞ | 383 | 146 | 620½ | 85 |
| 278¾ | 315¼ | 351⅝ | 388¼ | 148 | 629 | 86 |
| 282½ | 319½ | 356⅜ | 393½ | 150 | 637½ | 87¼ |

# Pole Installation, Cutting & Splicing

## Top Hole Installation Guide

This chart will position the bracket so the drapery will clear the floor approximately ½".

1. Find your pole style, size and header style in the chart.
2. Determine the desired finished drapery length.
3. Add or subtract number in the top hole column from the drapery's finished length to determine how high to measure for the top hole of the bracket.

| Stationary Poles | Rod Pocket (no top ruffle) | Pleated (any variety) | |
|---|---|---|---|
| | Top Hole | Top Hole | Pin Set |
| **1" Standard Bracket** | +¾" | +2⅝" | ¼" |

| Wall Mount Traverse Rods | Pleated (any variety) | | | Ripplefold™ (any fullness) | |
|---|---|---|---|---|---|
| | Top Hole for Wall Mount | Floor to Ceiling Deduction | Suggested Pin Set | Top Hole for Wall Mount | Floor to Ceiling Deduction |
| **1⅜" Estate™** | +1 11/16" | -2⅛" | ½" | +1 11/16" | -2⅛" |
| **Ceiling Mount Traverse Rods** | | | | | |
| **1⅜" Estate™** | +0" | -3⅝" | ½" | +0" | -3⅝" |

## Cutting & Splicing Wrought Iron Poles

- Measure to desired length and carefully wrap area with an easy peel, blue painter's tape as not to damage the finish.
- Cut through the tape with sharp fine tooth saw or a pipe cutter with a stainless steel blade. Cut slowly to reduce any chipping to the product finish.
- For spliced poles, add a finial plug to the end cut.
- Splice fits inside the pole and is specific to the pole diameter.

Finial Plug

Part #56369058
or #56469058

Splice

Part #56366061
or #56466061

# Learn more about all of our collections

| | | | | 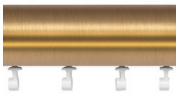 |
|---|---|---|---|---|
| | **Designer Metals™ Collection**<br>sophisticated styles<br>acrylic and metals<br>striking finishes | **Wood Trends™ Collection**<br>crafted timelessness<br>beautiful finishes<br>classic designs | **Wrought Iron Collection**<br>architectural statement<br>remarkable history<br>real wrought iron | **Estate™ Traverse Rods Collection**<br>form meets function<br>innovative solutions<br>customizable |
| **Available Diameters** | 1" 1⅜" & 2" | 1⅜" & 2" | 1" & 1⅜" | **1⅜"**<br>Wrought Iron<br>**1⅜" & 2"**<br>Designer Metals™<br>Wood Trends™ |
| **Pole Lengths** | Fixed - 4', 6' & 8'<br>Telescoping - 36"-180" | 4', 6', 8', 12' | 6' & 8' | 18"-16' |
| **Pole Material** | Metal | Wood | Metal | Wood & Metal |
| **Operation Modes** | Stationary,<br>Traversing Manual<br>or Motorized Draw | Stationary,<br>Traversing Manual<br>or Motorized Draw | Stationary,<br>Traversing Manual<br>or Motorized Draw | Traversing Manual<br>or Motorized Draw |
| **Pole Sizing** | Fixed Width<br>& Telescoping | Fixed Width | Fixed Width | Cut to Measure |
| **Finishes** | 8 | 9 | 6 | 62 |
| **Finials** | 27 | 18 | 18 | 106 |
| **Bracket Types** | Decorative Fixed<br>& Bypass Fixed | Decorative Fixed | Decorative Fixed<br>& Bypass Fixed | Concealed Adjustable |
| **Bracket Sizes** | 3" – 8¾",<br>Inside Mount<br>& Ceiling Mount | 3½" – 7",<br>Inside Mount<br>& Ceiling Mount | 3½" – 6½"<br>& Inside Mount | 1¾" – 3¼" |
| **Treatment Styles** | Stationary<br>& Traversing | Stationary<br>& Traversing | Stationary<br>& Traversing | Traversing |

**Designer Metals** | Stratta in Brushed Bronze

**Wood Trends** | Chaucer in Estate Oak, Black

**Wrought Iron** | Darby in Graphite, Heirloom Copper

| PRODUCT NO. | PAGE |
|---|---|
| 1026660 | 25 |
| 1026661 | 25 |
| 1026662 | 25 |
| 1026663 | 25 |
| 1833770 | 22 |
| 1833777 | 22 |
| 1833802 | 22 |
| 1833803 | 22 |
| 1833804 | 22 |
| 1833805 | 22 |
| 56351770 | 11 |
| 56351777 | 11 |
| 56351802 | 11 |
| 56358770 | 12 |
| 56358777 | 12 |
| 56358802 | 12 |
| 56359770 | 13 |
| 56359777 | 13 |
| 56359802 | 13 |
| 56360770 | 13 |
| 56360777 | 13 |
| 56360802 | 13 |
| 56361770 | 14 |
| 56361777 | 14 |
| 56361802 | 14 |
| 56362770 | 15 |
| 56362777 | 15 |
| 56362802 | 15 |
| 56363770 | 15 |
| 56363777 | 15 |
| 56363802 | 15 |
| 56365770 | 15 |
| 56365777 | 15 |
| 56365802 | 15 |
| 56366061 | 17 |
| 56367770 | 16 |
| 56367777 | 16 |
| 56367802 | 16 |
| 56369058 | 17 |
| 56370770 | 16 |
| 56370777 | 16 |
| 56370802 | 16 |
| 56371770 | 14 |
| 56371777 | 14 |
| 56371802 | 14 |
| 56372770 | 15 |
| 56372777 | 15 |
| 56372802 | 15 |
| 56373770 | 11 |
| 56373777 | 11 |
| 56373802 | 11 |
| 56374770 | 11 |
| 56374777 | 11 |

| PRODUCT NO. | PAGE |
|---|---|
| 56374802 | 11 |
| 56375770 | 17 |
| 56375777 | 17 |
| 56375802 | 17 |
| 56351803 | 11 |
| 56351804 | 11 |
| 56351805 | 11 |
| 56358803 | 12 |
| 56358804 | 12 |
| 56358805 | 12 |
| 56359803 | 13 |
| 56359804 | 13 |
| 56359805 | 13 |
| 56360803 | 13 |
| 56360804 | 13 |
| 56360805 | 13 |
| 56361803 | 14 |
| 56361804 | 14 |
| 56361805 | 14 |
| 56362803 | 15 |
| 56362804 | 15 |
| 56362805 | 15 |
| 56363803 | 15 |
| 56363804 | 15 |
| 56363805 | 15 |
| 56365803 | 15 |
| 56365804 | 15 |
| 56365805 | 15 |
| 56367803 | 16 |
| 56367804 | 16 |
| 56367805 | 16 |
| 56370803 | 16 |
| 56370804 | 16 |
| 56370805 | 16 |
| 56371803 | 14 |
| 56371804 | 14 |
| 56371805 | 14 |
| 56372803 | 15 |
| 56372804 | 15 |
| 56372805 | 15 |
| 56373803 | 11 |
| 56373804 | 11 |
| 56373805 | 11 |
| 56374803 | 11 |
| 56374804 | 11 |
| 56374805 | 11 |
| 56375803 | 17 |
| 56375804 | 17 |
| 56375805 | 17 |
| 56376770 | 28 |
| 56376777 | 28 |
| 56376802 | 28 |
| 56376803 | 28 |

| PRODUCT NO. | PAGE |
|---|---|
| 56376804 | 28 |
| 56376805 | 28 |
| 56381770 | 8 |
| 56381777 | 8 |
| 56381802 | 8 |
| 56381803 | 8 |
| 56381804 | 8 |
| 56381805 | 8 |
| 56382770 | 8 |
| 56382777 | 8 |
| 56382802 | 8 |
| 56382803 | 8 |
| 56382804 | 8 |
| 56382805 | 8 |
| 56383770 | 8 |
| 56383777 | 8 |
| 56383802 | 8 |
| 56383803 | 8 |
| 56383804 | 8 |
| 56383805 | 8 |
| 56384770 | 8 |
| 56384777 | 8 |
| 56384802 | 8 |
| 56384803 | 8 |
| 56384804 | 8 |
| 56384805 | 8 |
| 56385770 | 11 |
| 56385777 | 11 |
| 56385802 | 11 |
| 56385803 | 11 |
| 56385804 | 11 |
| 56385805 | 11 |
| 56451770 | 20 |
| 56451777 | 20 |
| 56451802 | 20 |
| 56451803 | 20 |
| 56451804 | 20 |
| 56451805 | 20 |
| 56458770 | 22 |
| 56458777 | 22 |
| 56458802 | 22 |
| 56458803 | 22 |
| 56458804 | 22 |
| 56458805 | 22 |
| 56459770 | 23 |
| 56459777 | 23 |
| 56459802 | 23 |
| 56459803 | 23 |
| 56459804 | 23 |
| 56459805 | 23 |
| 56460770 | 23 |
| 56460777 | 23 |
| 56460802 | 23 |

| PRODUCT NO. | PAGE |
|---|---|
| 56460803 | 23 |
| 56460804 | 23 |
| 56460805 | 23 |
| 56461770 | 26 |
| 56461777 | 26 |
| 56461802 | 26 |
| 56461803 | 26 |
| 56461804 | 26 |
| 56461805 | 26 |
| 56462770 | 27 |
| 56462777 | 27 |
| 56462802 | 27 |
| 56462803 | 27 |
| 56462804 | 27 |
| 56462805 | 27 |
| 56463770 | 27 |
| 56463777 | 27 |
| 56463802 | 27 |
| 56463803 | 27 |
| 56463804 | 27 |
| 56463805 | 27 |
| 56465770 | 27 |
| 56465777 | 27 |
| 56465802 | 27 |
| 56465803 | 27 |
| 56465804 | 27 |
| 56465805 | 27 |
| 56466061 | 28 |
| 56467770 | 28 |
| 56467777 | 28 |
| 56467802 | 28 |
| 56467803 | 28 |
| 56467804 | 28 |
| 56467805 | 28 |
| 56469058 | 28 |
| 56470770 | 28 |
| 56470777 | 28 |
| 56470802 | 28 |
| 56470803 | 28 |
| 56470804 | 28 |
| 56470805 | 28 |
| 56471770 | 26 |
| 56471777 | 26 |
| 56471802 | 26 |
| 56471803 | 26 |
| 56471804 | 26 |
| 56471805 | 26 |
| 56472770 | 27 |
| 56472777 | 27 |
| 56472802 | 27 |
| 56472803 | 27 |
| 56472804 | 27 |
| 56472805 | 27 |

| PRODUCT NO. | PAGE |
|---|---|
| 56473770 | 20 |
| 56473777 | 20 |
| 56473802 | 20 |
| 56473803 | 20 |
| 56473804 | 20 |
| 56473805 | 20 |
| 56474770 | 20 |
| 56474777 | 20 |
| 56474802 | 20 |
| 56474803 | 20 |
| 56474804 | 20 |
| 56474805 | 20 |
| 56481770 | 19 |
| 56481777 | 19 |
| 56481802 | 19 |
| 56481803 | 19 |
| 56481804 | 19 |
| 56481805 | 19 |
| 56482770 | 19 |
| 56482777 | 19 |
| 56482802 | 19 |
| 56482803 | 19 |
| 56482804 | 19 |
| 56482805 | 19 |
| 56483770 | 19 |
| 56483777 | 19 |
| 56483802 | 19 |
| 56483803 | 19 |
| 56483804 | 19 |
| 56483805 | 19 |
| 56484770 | 19 |
| 56484777 | 19 |
| 56484802 | 19 |
| 56484803 | 19 |
| 56484804 | 19 |
| 56484805 | 19 |
| 56485770 | 20 |
| 56485777 | 20 |
| 56485802 | 20 |
| 56485803 | 20 |
| 56485804 | 20 |
| 56485805 | 20 |
| 62102000 | 25 |
| 62101010 | 25 |
| 62101000 | 25 |
| 62108000 | 25 |
| 62109000 | 25 |
| 62201300 | 25 |
| 71134110 | 24 |
| 71132006 | 24 |
| 71132012 | 24 |
| 71132062 | 24 |
| 71132110 | 24 |

| PRODUCT NO. | PAGE |
|---|---|
| 83697770 | 24 |
| 83697777 | 24 |
| 83697802 | 24 |
| 83697803 | 24 |
| 83697804 | 24 |
| 83697805 | 24 |
| 83698770 | 24 |
| 83698777 | 24 |
| 83698802 | 24 |
| 83698803 | 24 |
| 83698804 | 24 |
| 83698805 | 24 |
| 84990000 | 29 |

KIRSCH®
DRAPERY HARDWARE

Designer Metals™
inspiring brilliance

Wood Trends™
renewing traditions

Wrought Iron
forging artistry

Custom Rodding
& Basic Hardware
unique solutions

510958