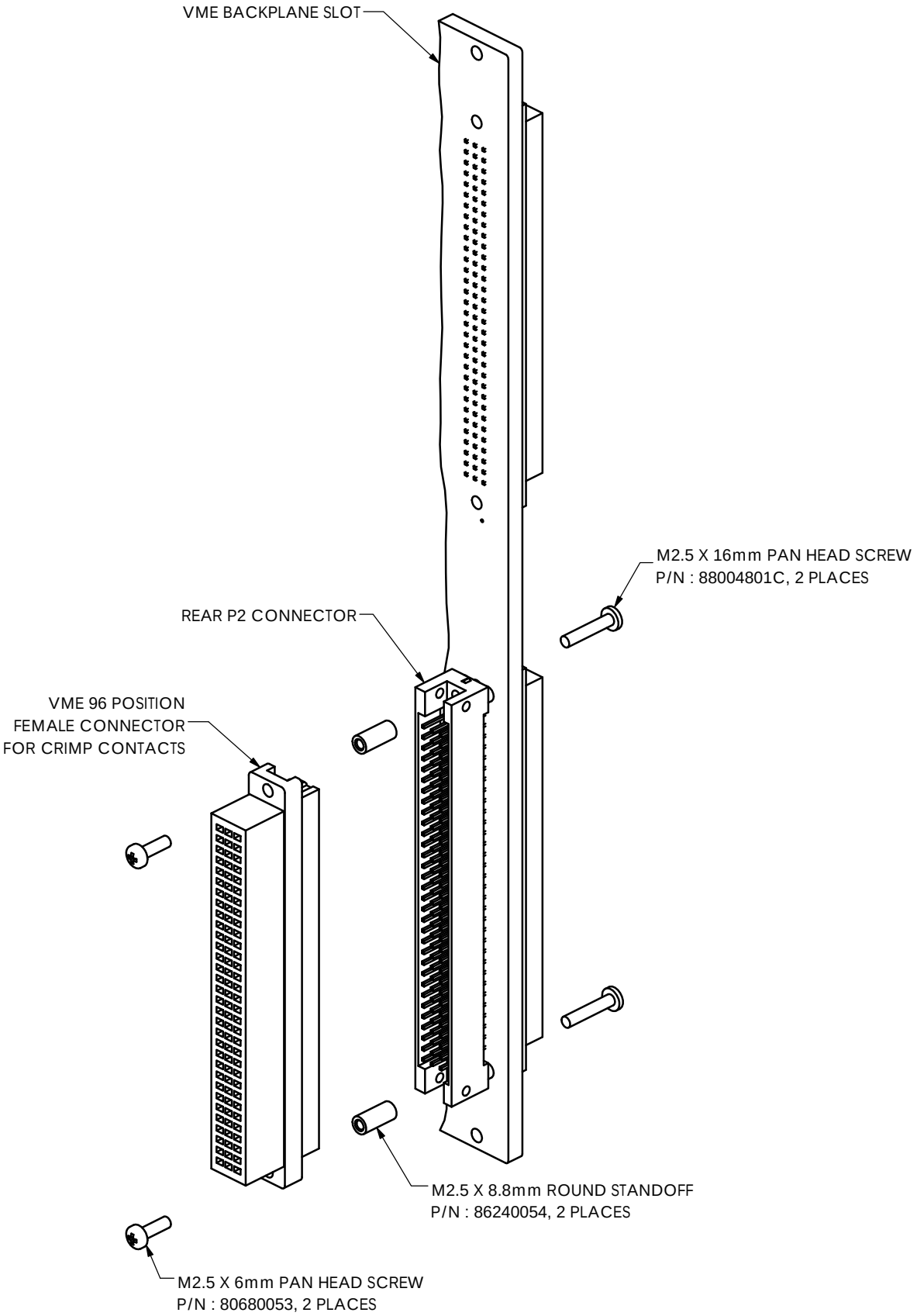VME BACKPLANE P2 CABLE ASSY MOUNTING