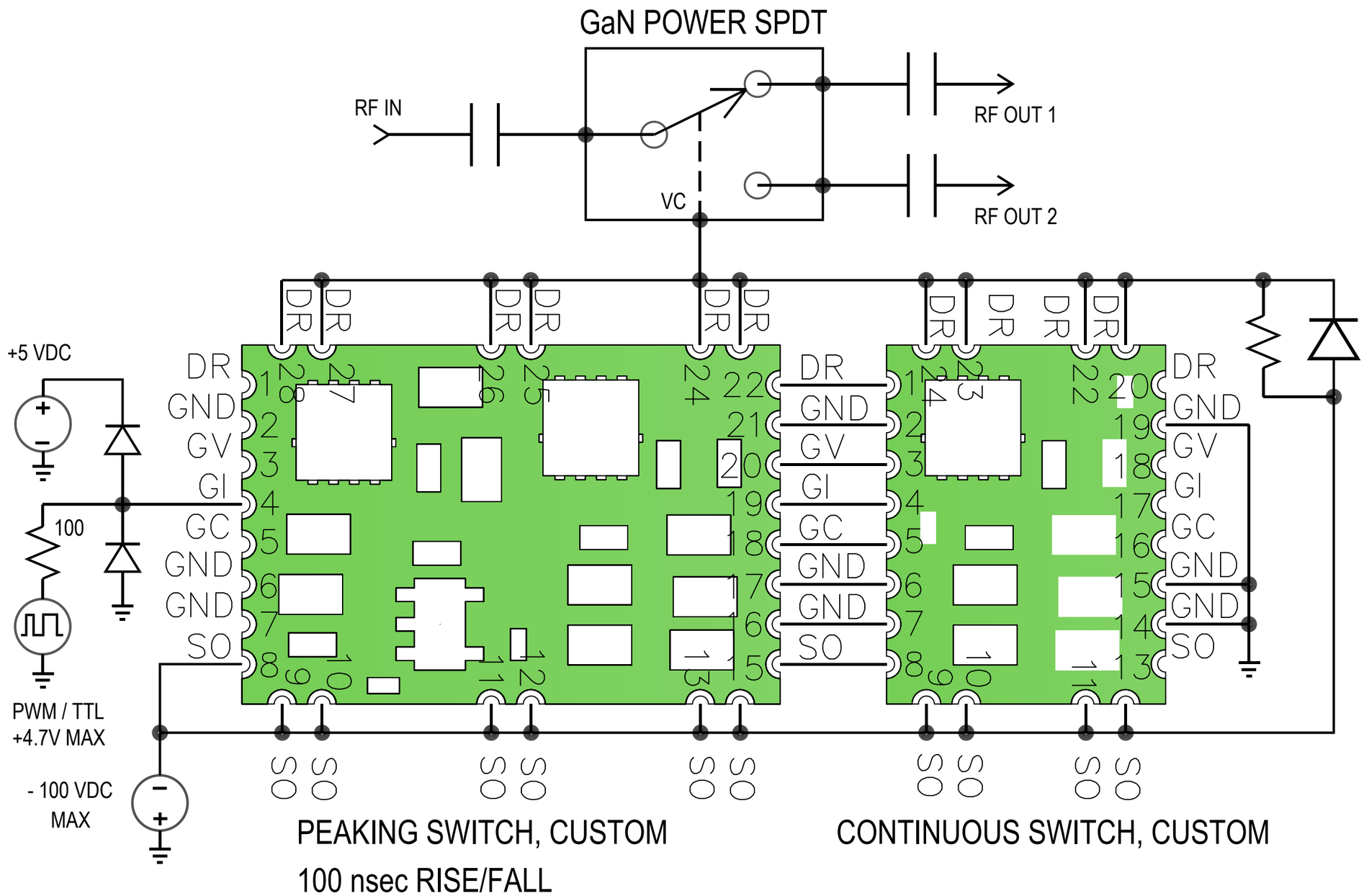
GaN POWER SPDT
RF IN
RF OUT 1
RF OUT 2
VC
+5 VDC
100
PWM / TTL
+4.7V MAX
- 100 VDC
MAX
DR
GND
GV
GI
GC
GND
GND
SO
PEAKING SWITCH, CUSTOM
100 nsec RISE/FALL
CONTINUOUS SWITCH, CUSTOM