Affordable Housing Project – Tracks EX1 of the Marble Ski Area - Galo Hill (**Exhibit A**)

Summary of the project and why – The town of Marble has a growing need for affordable housing. Current market trends have brought real estate to all time high in the community. The effect of this trend has priced the available properties out of reach for the young family demographic and the working class. See market pricing **Exhibit B (Avg median $525,000)**

The Galo Hill project is aimed at addressing affordable housing and help supply some options for young professionals looking to grow roots in the area. The intention is to build the most desirable accommodations possible with a minimal impact on the environment and town.

Scope and Size – Currently the proposed plan would be 5 small cabins (2bd, 2ba) on 3.5 acers - Each approximately 800-900 sq feet in size. These units would be progressive green prefab construction using state of the art materials and minimal construction waste. See **Exhibit C.** These units would allow for shared parking (See **Exhibit D**) and shared septic. (See Exhibit E)

Infrastructure – The units would be on Town Water. We would fund an extension of the water main to reach the property. WWE have designed plans for this. Holy Cross would also supply the electricity after adding a transformer closer to the lot. The OWTS system would be engineered by Sopris Engineering based off of state and local regulations. Sized to meet requirements. A preliminary site assessment was drafted by All Valley Septic to show that the demand and load could be met with one system.
See **Exhibit E**

Variance request –

After reviewing the town's ordinances, specifically 7.2.40 - D. under Supplemental Regulations, the Ordinances state "In any zone, more than one structure housing a permitted or permissible principal use may be erected on a single lot, provided that yard and other requirements of this Title shall be met for each structure as though it were on an individual lot."

To my understanding this means that we could build 1 structure per acre. We would be requesting a variance for this ordinance. **Reason for the request** - Our goal is to provide the most attractive and desirable housing for young families. Shared walls and dormitory style housing attracts college students not families and young professionals. The investment and capital that this project demands deserves individual houses and as stated above we would like 5 structures. We feel this would be an ideal amount of units for the space and septic load.

REPLAT OF TRACTS A AND EX1, MARBLE SKI AREA, FILING NO. 1

GUNNISON COUNTY, COLORADO

Scale 1" = 60'

ATTORNEY'S OPINION

I, Thomas C. Fist, an attorney at law duly licensed to practice in the State of Colorado, hereby certify that I have examined title to all lands herein dedicated and platted and find title is free and clear of all liens, encumbrances, restrictions and reservations except as shown.

By _____
Thomas C. Fist

CERTIFICATION OF DEDICATION AND OWNERSHIP

Timothy M. O'Shea and Alice L. O'Shea, being the owners of the land further

Tract A, Marble Ski Area Filing No. 1, Gunnison County, Colorado, more or less, which was originally platted as 8.19 acres more or less

under the name Replat of Tract A and Tract EX1, Marble Ski Area, File 1996-019

have laid out, platted and subdivided the same as shown on this plat and dedicate to the public at large the streets, alleys, tracts and other public areas forever, and hereby dedicate those portions of land adjacent to public installation and maintenance of public utilities as shown hereon.

The existing P.U.D. land use designation is pending current as permanently on Tract A and Tract EX1 shall be used for residential purposes only.

In witness whereof Timothy M. O'Shea and Alice L. O'Shea have hereunto set their hands this _____ day of _____ A.D., 19__.

By _____
Timothy M. O'Shea

_____
Alice L. O'Shea

STATE OF COLORADO)
) ss.
COUNTY OF GARFIELD)

The foregoing instrument was acknowledged before me this _____ A.D., 19__, by Timothy M. O'Shea and Alice L. O'Shea.

My Commission Expires

My Address is

Witness my hand and seal

_____
Notary Public

CERTIFICATION OF DEDICATION AND OWNERSHIP

Bleu Street, being the owner of the land described as follows:

Tract EX1, Marble Ski Area Filing No. 1, Gunnison County, Colorado, more or less, which was originally platted as 3.40 acres more or less

under the name Replat of Tract A and Tract EX1, Marble Ski Area, File 1996-019

has laid out, platted and subdivided the same as shown on this plat and dedicate to the public at large the streets, alleys, tracts and other public areas forever, and hereby dedicate those portions of land adjacent to public installation and maintenance of public utilities as shown hereon.

The existing P.U.D. land use designation is pending current as permanently on Tract A and Tract EX1 shall be used for residential purposes only.

In witness whereof Bleu Street has caused her name this _____ A.D., 19__.

By _____
Bleu Street

STATE OF COLORADO)
) ss.
COUNTY OF GARFIELD)

The foregoing instrument was acknowledged before me this _____ A.D., 19__, by Bleu Street.

My Commission Expires

My Address is

Witness my hand and seal

_____
Notary Public

Vicinity Map

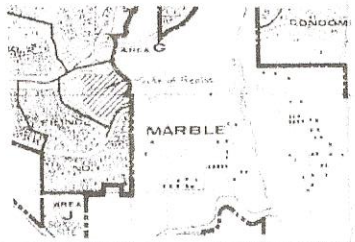

SURVEYOR'S CERTIFICATE

I, Sidney Lindgren, do hereby certify that I am a registered land surveyor licensed under the laws of the State of Colorado that this plat is a true, correct, and complete plat of the Replat of Tract A and Tract EX1, Marble Ski Area, Filing No. 1, as laid out, platted and subdivided, as shown hereon. The survey was made from an accurate survey of land performed by me or under my supervision, showing the location and dimensions of the parcels of land shown hereon.

In witness whereof I have set my hand this _____ day of _____, A.D., 19__.

_____
Sidney Lindgren

GUNNISON COUNTY CLERK AND RECORDER'S ACCEPTANCE

This plat was accepted for filing in my office of the Clerk and Recorder, County of Gunnison, Colorado, on this _____ day of _____, A.D., 19__, at Reception Number _____, Time _____, Date _____.

_____
County Clerk

Replat of Tracts A and EX
Marble Ski Area
Filing No. 1
Gunnison County, Colorado
LINES IN SPACE
SYDNEY LINDGREN (U.S. AND
Date 27 March 1996

Exhibit A

Home Tour Sort **13 Properties**

		Price / Status / MLS #	Major Area	Area	Sub/Loc	Street #	Street Name	Address 2/Unit #	City/Town	Seller's Name	Total SqFt	Bedrooms	Baths - Full	Listing Member	Next Tour of Homes
1		**$210,000** 201 W Park Street Marble, CO 81623 Active / 140936	Redstone/Crystal Valley	08-Marble	None	201	Park		Marble		1,286	3	1		
2		**$378,500** 115 Alpine Street Marble, CO 81623 Active / 144900	Redstone/Crystal Valley	08-Marble	Chair Mountain	115	Alpine		Marble		1,698	3	2		
3		**$385,000** 832 Serpentine Trail Marble, CO 81623 Active / 145183	Redstone/Crystal Valley	08-Marble	None	832	Serpentine Trail		Marble		3,062	2	2		
4		**$399,000** 200 Serpentine Trail Marble, CO 81623 Active / 144153	Redstone/Crystal Valley	08-Marble	None	200	Serpentine		Marble		1,488	3	2		
5		**$429,000** 455 W Village Drive Marble, CO 81623 Active / 144946	Redstone/Crystal Valley	08-Marble	None	455	Village		Marble		1,766	2	2		
6		**$435,000** 1625 Village Drive Marble, CO 81623 Active / 143764	Redstone/Crystal Valley	08-Marble	None	1625	Village		Marble		2,462	2	2		
7		**$449,000** 310 E Silver Street Marble, CO 81623 Active / 142841	Redstone/Crystal Valley	08-Marble	None	310	Silver		Marble		2,058	3	2		
8		**$449,000** 711 W Park Street Marble, CO 81623 Active / 142954	Redstone/Crystal Valley	08-Marble	None	711	Park		Marble		2,160	3	2		
9		**$495,000** 480 W Marble Street Marble, CO 81623 Active / 138483	Redstone/Crystal Valley	08-Marble	None	480	Marble		Marble		2,312	3	3		
10		**$549,000** 5580 County Road 3 Marble, CO 81623 Active / 139309	Redstone/Crystal Valley	08-Marble	None	5580	County Road 3		Marble		5,312	7	7		
11		**$677,000** 1001 Brookie Marble, CO 81623 Active / 142144	Redstone/Crystal Valley	08-Marble	Lakeview	1001	Brookie		Marble		4,103	4	4		
12		**$695,000** 5455 W Marble Village Drive Marble, CO 81623 Active / 145041	Redstone/Crystal Valley	08-Marble	None	5455	Marble Village		Marble		4,716	5	3		
13		**$1,200,000** 5590 County Road 3 Marble, CO 81623 Active / 144145	Redstone/Crystal Valley	08-Marble	Alpine Woods	5590	County Road 3		Marble		4,200	6	4		

Information is deemed to be reliable, but is not guaranteed. © 2016 MLS and FBS. Prepared by Chris Lawrence on Wednesday, October 05, 2016 7:05 AM.

median Price $525,000!

Exhibit B

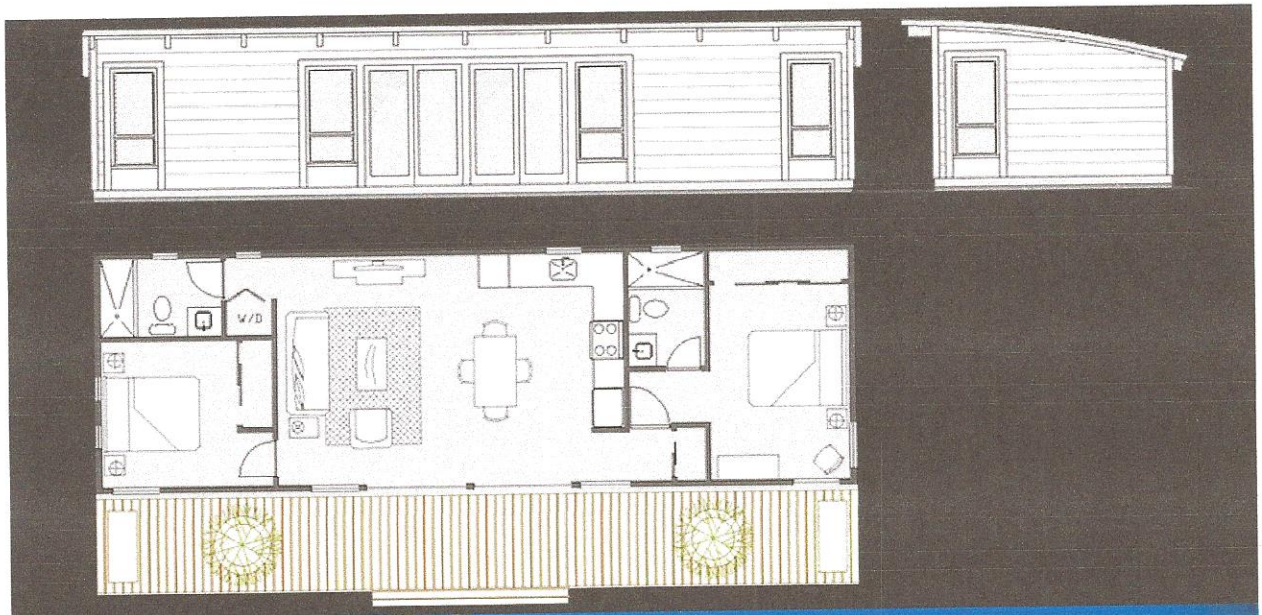

Exhibit C

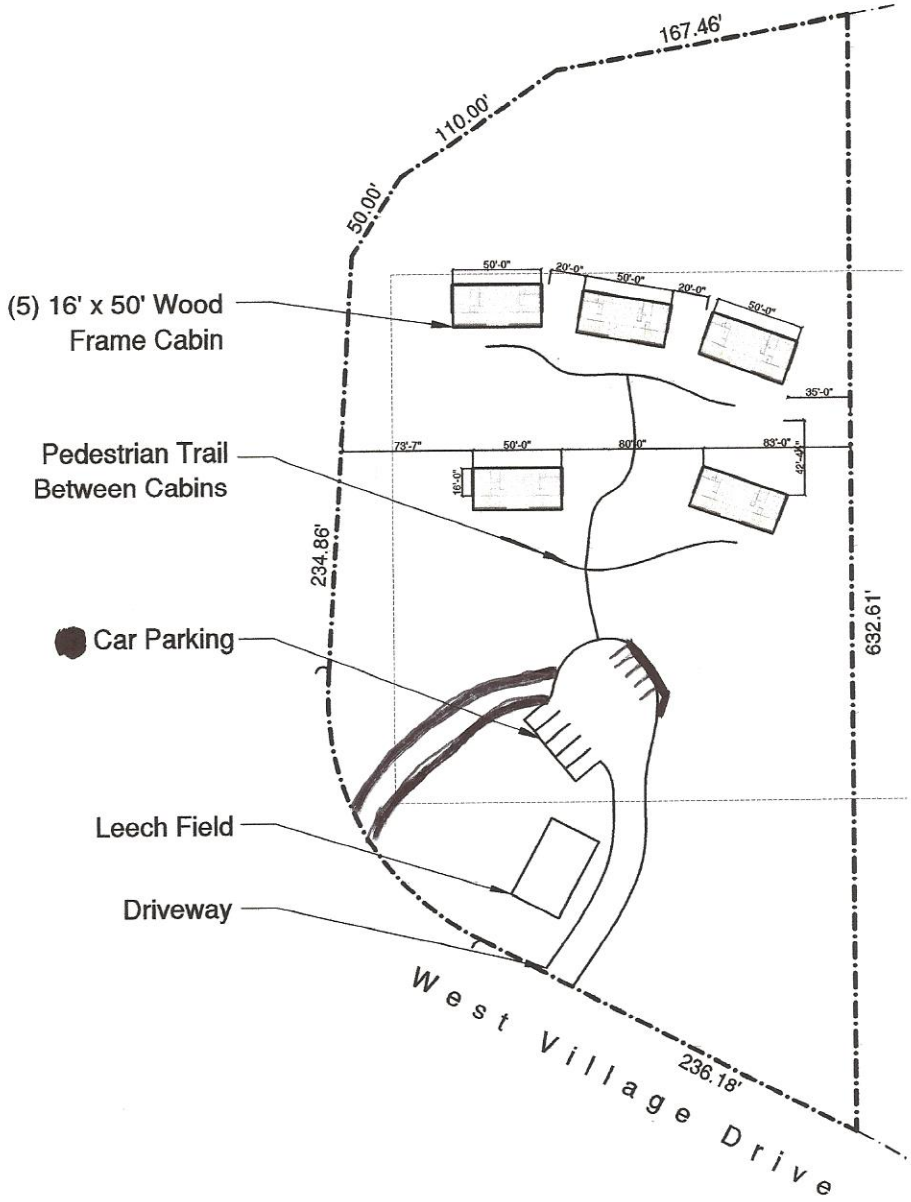

option 2b

Exhibit D

1 SITE PLAN

1/64"=1'-0"

Gallo Hill Residential Development
Slow Groovin' BBQ

ALL SERVICE septic
33 Four Wheel Drive Rd
Carbondale, CO 81623
970-309-5259

January 7, 2015

Project No. C1188

Ryan Vinciguerra
ryanvinciguerra@gmail.com

Subsurface Evaluation and Onsite Wastewater Treatment System (OWTS) Planning
Proposed Employee Cabins
Galo Hill
Town of Marble, Colorado

Ryan,

ALL SERVICE septic, LLC has visited the property, conducted a subsurface evaluation, and reviewed the desired development plan. The property is referred to as "Galo Hill." The legal description of the 3.4-acre property is as follows: Replat of Tracts A and EX1, Marble Ski Area, Filing No. 1, Gunnison County, Colorado.

EXISTING CONDITIONS

The property is currently undeveloped. At the time of our site visit, there was snow covering the ground surface. Visible vegetation included scrub oak and brush. The proposed soil treatment area (STA) slopes at 10 to 15% to the south, toward the Crystal River. We recommend obtaining a topographic survey of the property for accurate placement of buildings, driveway, and OWTS components.

SUBSURFACE

The subsurface was investigated on January 5, 2015 by digging two soil profile test pit excavations (Test Pits). A visual and tactile soil analysis was completed by Carla Ostberg at the time of excavation.[1]

The materials encountered in the Test Pit #1 consisted of 18-inches of dark brown, granular topsoil, underlain by dark brown loam explored to a maximum depth of 8-feet. Angular rocks up to 4-inches in diameter were present to a depth of 5-feet. Larger angular rocks up to 8-inches in diameter were present below a depth of 5-feet. No bedrock or groundwater was encountered.

The materials encountered in Test Pit #2 were consistent with those encountered in Test Pit #1. The Test Pit was explored to a maximum depth of 8-feet. No bedrock or groundwater was encountered.

A sample of the soils was taken from Test Pit #1 at approximately 3-feet below grade. The soil formed a ball and a ribbon less than 1-inch in length before breaking. Soil structure shape was blocky, soil structure grade was moderate, and consistence was friable. Soils had both a gritty and smooth feel.

STA sizing is based on Soil Type 2, Loam, with blocky structure type and moderate structure grade. **A long term acceptance rate (LTAR) of 0.6 gallons per square foot will be used to design the OWTS, in accordance with Table 10-1 Soil Type 2 presented in the Town of Marble On-Site Wastewater Treatment System Regulations, effective July 9, 2015.**

---

[1] Carla Ostberg holds a Certificate of Attendance and Examination from the CPOW Visual and Tactile Evaluation of Soils Training.

Exhibit E

Test Pit #1

Test Pit to 4-feet

Backfill

View of pit

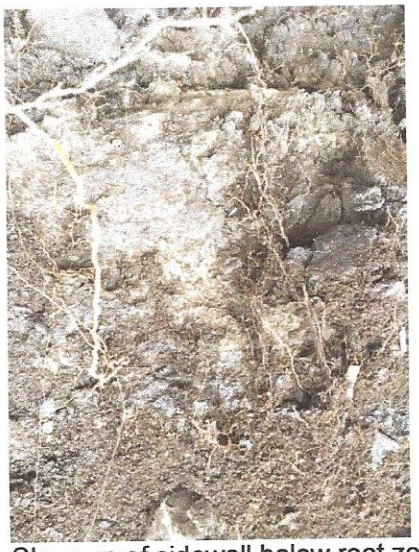

Close up of sidewall below root zone

Backfill from deeper in pit (a few larger angular rocks)

Exhibit E.

Test Pit #2

Backfill

Sidewall

View of pit

PROPOSED DEVELOPMENT

New employee cabins are proposed. There could be a potential of up to 13 total bedrooms within the development. The cabins will be served by water provided by the Marble Water Company. All water lines must be indicated on the site plan to assure proper setbacks are maintained to OWTS components. It did not appear that any ditches or streams would come within the required 76-foot[2] setback to the proposed STA at the time of our visit. Verification of site conditions at a time where there is no snow cover will be required prior to completion of the OWTS design.

Design Calculations:
13 bedrooms x 75 gal/day x 2 ppl/bedroom = 1950 gallons
1950 gal / 0.6 gal/SF = 3250 SF before reductions
Options for reductions include pressurization of beds or trenches, using chambers or other manufactured media for distribution.

There appears to be adequate space on the property to accommodate a new OWTS. There are multiple options with respect to configuration and treatment levels. For example, using Treatment Level 1 with a pressurized chamber trench design could include eight chamber trenches, each trench with 19 'Quick 4' Infiltrator® chambers. Running two trenches directly across from one another, following the topography for each set of trenches and allowing a minimum of 6-feet of undisturbed soil between each trench would result in an approximate footprint of 30' x 155'. Smaller footprints can be obtained by utilizing a bed configuration, which would require more chambers, or other technologies that can attain higher level treatment.

Please call with questions.

Sincerely,

ALL SERVICE septic, LLC

Carla Ostberg

Carla Ostberg, MPH, REHS

Reviewed By:

Richard H. Petz, PE

COLORADO LICENSED
RICHARD HERBERT PETZ
38662
PROFESSIONAL ENGINEER

[2] The "8-foot Rule" applies to all design flows exceeding 1000 gallons / day.

Exhibit E

Land+Shelter
Architecture • Planning • Development

April 3, 2017

MEMO

TO: Marble Town Council

FROM: Andrea Korber
Land + Shelter
PO Box 550
Carbondale, CO 81623

CC: Ryan Vinciguerra

Project: Gallo Hill Housing

Subject: Use By Review

Dear Councilmembers and Neighbors:

Please consider, the attached site plan, cabin drawings, and the following letter addressing the topics that have been raised so far in this application.

Multi-Family is a use that the Marble residential zoning considered. It is allowed "by review." The Town council provided a list of review submission requirements to the applicant which we are responding to with this application. The project must meet the 2003 IBC codes and must meet the Marble OWTS regulations dated June 9, 2015.

1. Drawings – Architectural submission requirement drawings are attached.
2. Screening – Screening plantings are proposed to separate the structures from neighbors and these plantings are shown on the east and south of the site plan, where neighbors exist.
3. Use – The proposed use is long term rental dwellings. These are proposed as free-market rental units. Each unit will be offered for rent for long term lease and is designed to be a 2 bedroom unit. There will be one owner for all 5 units, and the facility is intended to stay that way and to be sold that way in the future. The owner believes this will be a valuable asset for resale, and that subdividing the property would not be desirable for the Town of Marble or the future owners. One owner creates one point of contact with the Town and uniform maintenance and communication with the Town.
4. Parking - No commercial vehicle parking, no commercial storage is proposed. – The property is being developed exclusively for residential use. The property will be used by the renters of the units and is not

April 3, 2017

proposed for commercial parking or commercial storage. 2 parking spaces per dwelling unit is shown on the site plan.

5. OWTS regulation compliance – The 5 cabins include 2 bedrooms per cabin. A total of 10 bedrooms. Marble OWTS regulations concerning multi-family apply to this parcel.
According to Paul Rutledge - OWTS reviewer for the Town - the Marble OWTS regulations a 10 bedroom multi-family system can be one system, no matter how many separate structures exist. The system is sized according to the bedrooms. The OWTS system compliance is designed by Carla Ostberg who is supplying drawings for review separately. Slate Creek is the western property border and the system has been located to the south east of the site to provide distance from the creek. Please see the OWTS documents for additional detail.
6. Restrictions on occupants (employee or income) – The owner intends for this rental housing to meet a need in Marble for modestly sized rental housing. It is not intended as a deed-restricted property that limits the type of renter by income or type of renter by place of work. Employees of Marble School, Slow Groovin' Barbecue, or any other establishment would be able to rent a unit at the discretion of the owner now and in the future.
7. Low visibility, low impact – The cabins are modest in size (1028sf per cabin) and set into a wooded site. They are single story cabins. The materials are natural and blend into the existing building fabric of Marble – predominantly stained wood siding – see elevations. There was considerable effort to screen as much as possible to preserve everyone's privacy – both the renters and the existing homes.
8. Resale concerns – Needs to be able to sell – The property is intended as a 5 unit multi-family property. It should be modestly income generating for the current owner and potential future buyers. It is not intended for subdivision or sale in pieces. All five cabins should be maintained in similar and good quality working order. Dividing it might jeopardize that. Dividing it could create disharmony or differentiation in the upkeep that may not make sense for a group of 5 similar cabins. Any future buyer would likely wish for control of all 5, not take a risk on buying 2 or 3 and not knowing the fate of the other cabins.
9. Subdivisability – This parcel is intended to stay as one parcel. If the Town Council wishes to make a restriction on subdivision (no future subdivision) a condition of approval for a multi-dwelling unit plan, that could be a condition of approval and is the discretion of the council. The applicant does not intend to subdivide.
10. Year round occupancy – The proposed use is rental units, which are intended to be available for lease year round.
11. Lighting – Modest exterior lighting is proposed for front porch safety as shown on the plans and elevations. It is downward facing, located under porch roofs, and will not shine on any neighboring parcels.

Thank you for considering this use by review. I will be present at the April Council meeting for continued discussion and questions.

Land+Shelter
Architecture • Planning • Development

April 3, 2017

Warm regards,

Andrea Korber AIA
Land+Shelter

Post Office Box 550 • Carbondale, CO 81623 • TEL 970.963.0201 • FAX 970.963.0289
EMAIL info@landandshelter.com • www.landandshelter.com

Aspen • Carbondale

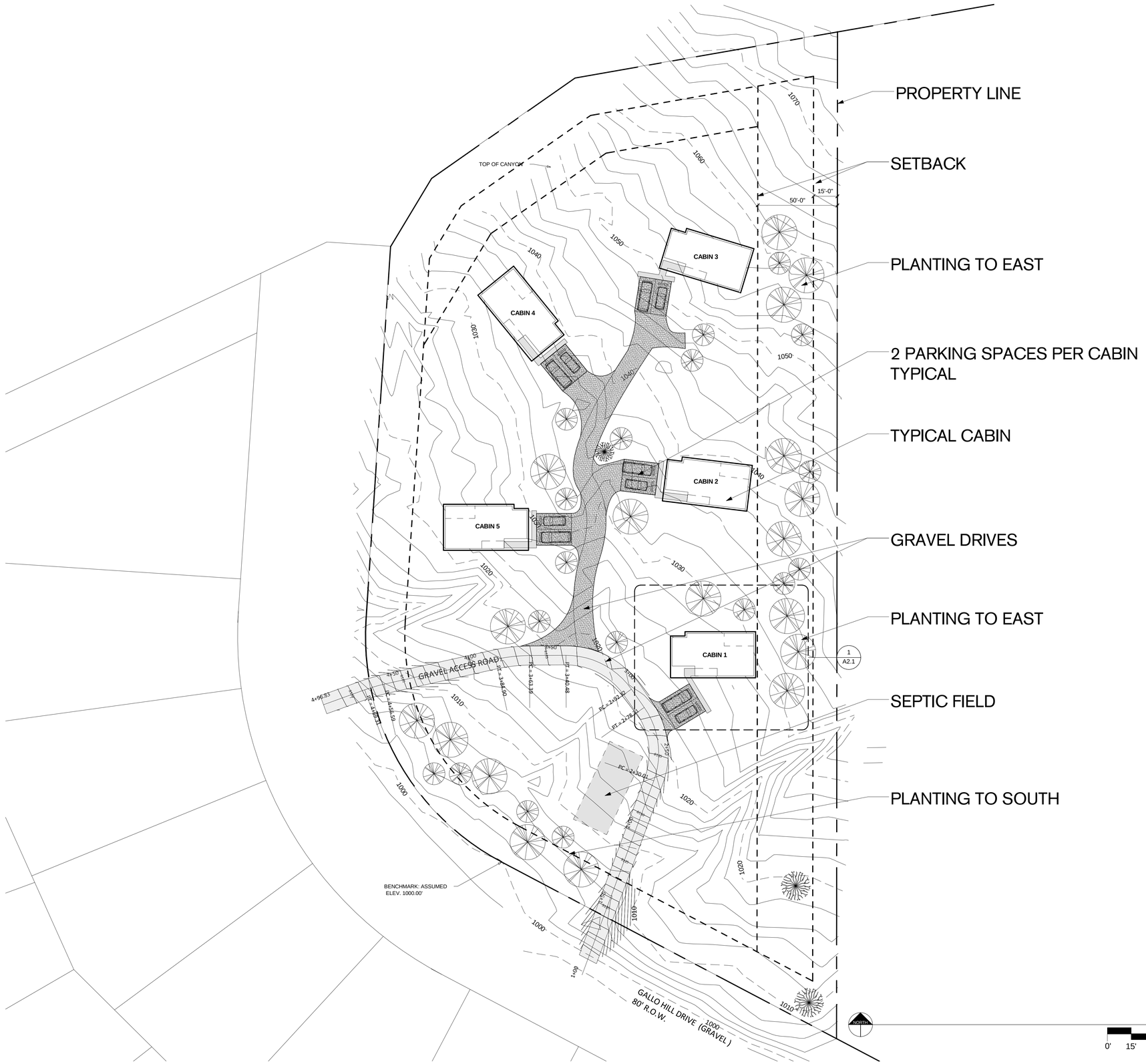

TOWN APPROVAL SHEET LIST	
Sheet Number	Sheet Name
A2.0	SITE PLAN
A3.2	FLOOR PLAN
A4.1	ELEVATIONS
A4.2	ELEVATIONS
A4.3	PERSPECTIVES

SITE PLAN 1

1" = 30'-0"

0' 15' 30' 60'

Land+Shelter
215 North 12th Street Unit C, PO Box 550, Carbondale, CO
t 970.963.0201 f 970.963.0289

NOTICE: DUTY OF COOPERATION
Release of these plans contemplates further cooperation among the owner, his or her contractor, and the architect. Design and construction are complex. Although the architect and his/her consultants have performed their services with due care and diligence, they cannot guarantee perfection. Communication is imperfect and every contingency cannot be anticipated. Any ambiguity or discrepancy discovered by the use of these plans shall be reported immediately to the architect. Failure to notify the architect compounds misunderstanding and increases construction costs. A failure to cooperate by a simple notice to the architect shall relieve the architect from responsibility for all consequences. Changes made from the plans without consent of the architect are unauthorized and shall relieve the designer from all consequences arising out of such changes.

TOWN APPROVAL
March 31, 2017
Revisions
1
2
3

CABINS
GALLO HILL
SCHEMATIC DESIGN

NOT FOR CONSTRUCTION

Job Site:
GALLO HILL
TBD Address Gallo Hill
Marble, CO 81623

SITE PLAN

Sheet Number:

A2.0

File: Gallo Hill.rvt

A4.1
1

A4.2 2

2 A4.1

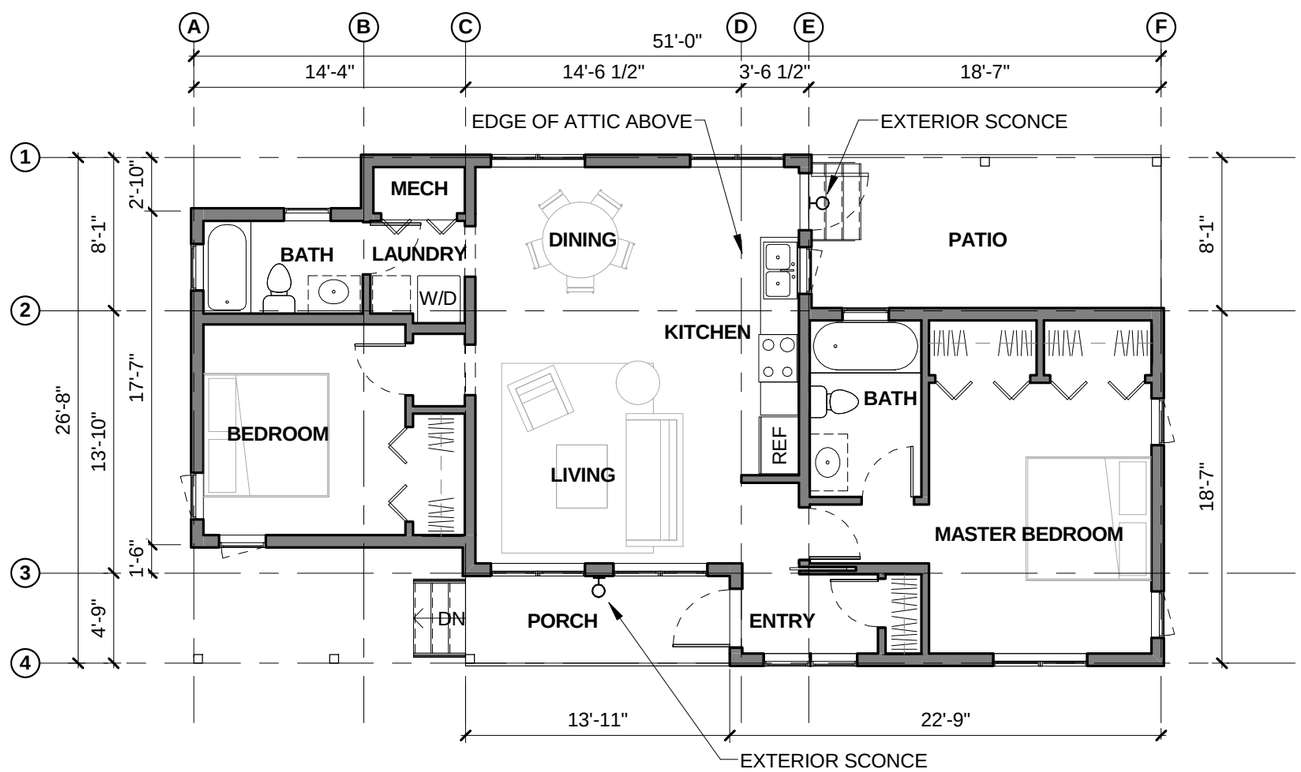

AREA: 1028 SQFT
SINGLE STORY CABIN ON CRAWL SPACE

1
A4.2

MAIN LEVEL PLAN

1/8" = 1'-0"

1

Land+Shelter
CABINS

TBD Address Gallo Hill
Marble, CO 81623

03/30/17

A3.2

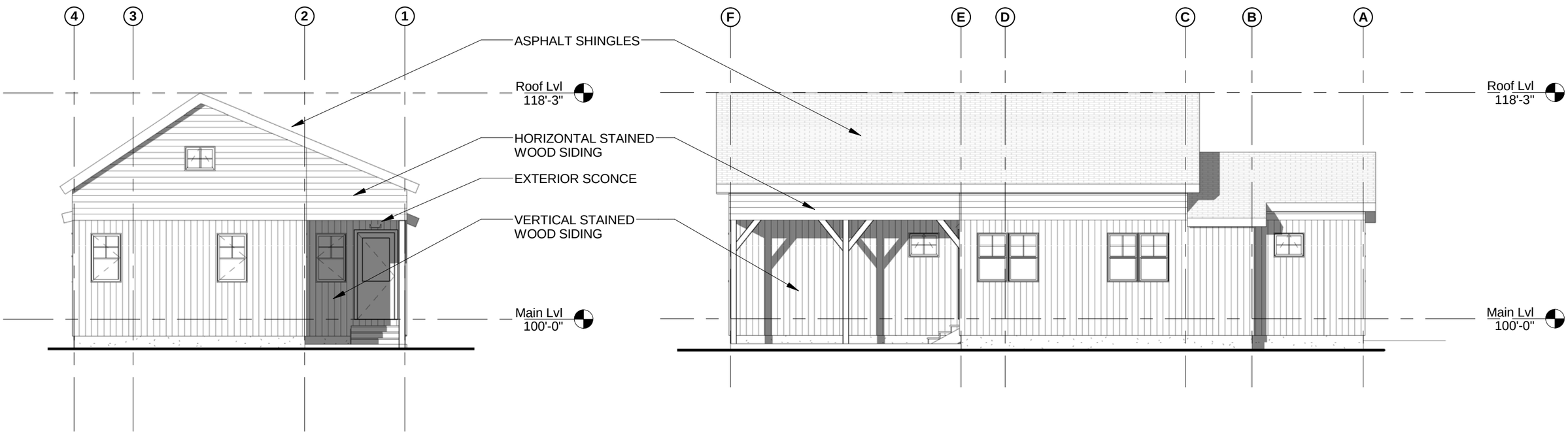

EAST ELEVATION 2
1/8" = 1'-0"

NORTH ELEVATION 1
1/8" = 1'-0"

Land+Shelter
CABINS

TBD Address Gallo Hill
Marble, CO 81623

03/30/17

A4.1

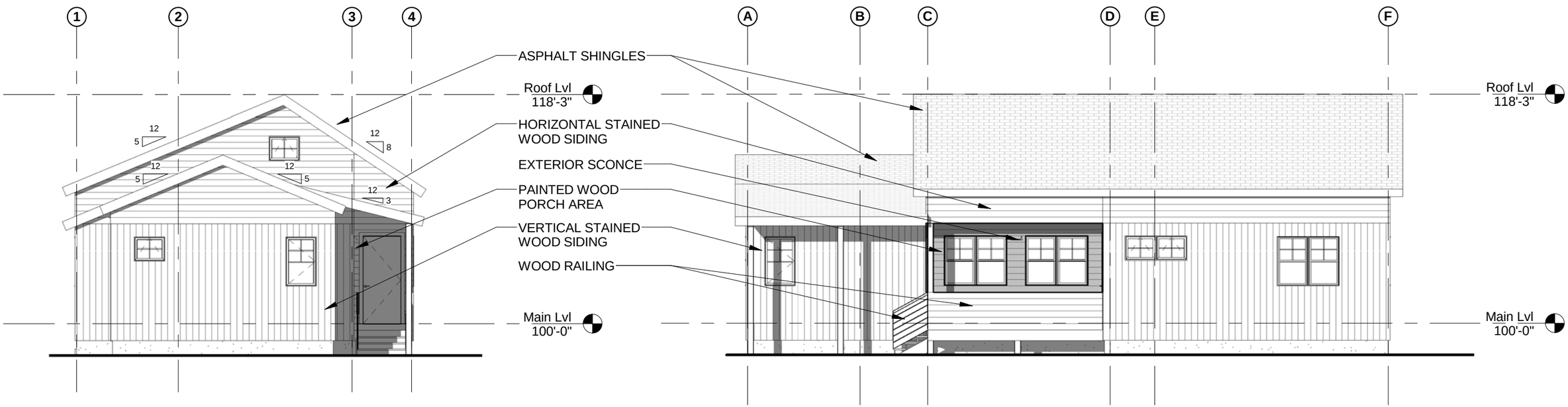

WEST ELEVATION 2

1/8" = 1'-0"

SOUTH ELEVATION 1

1/8" = 1'-0"

Land+Shelter

CABINS

TBD Address Gallo Hill
Marble, CO 81623

03/30/17

A4.2

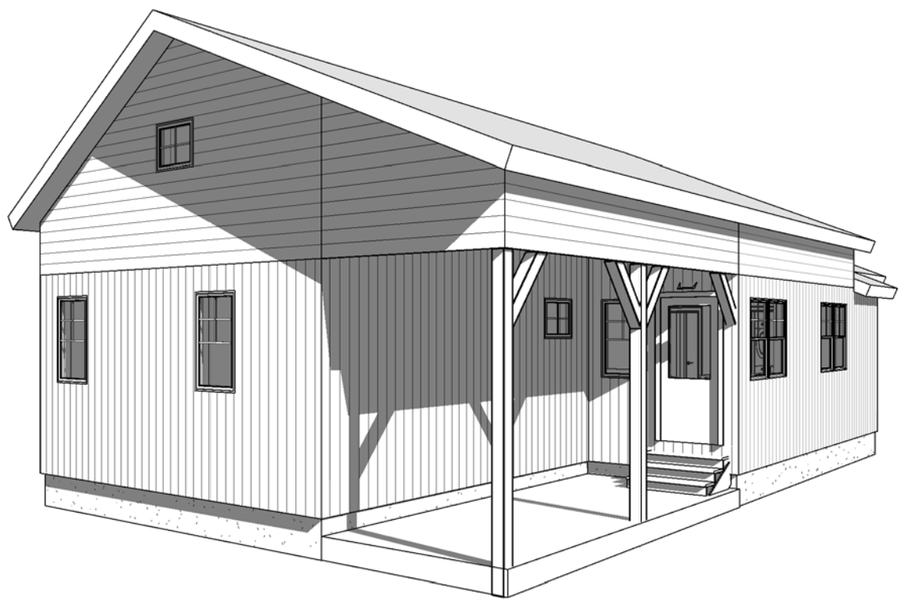

BACK VIEW 2

FRONT VIEW 1

Land+Shelter

CABINS

TBD Address Gallo Hill
Marble, CO 81623

03/30/17

A4.3

33 Four Wheel Drive Rd
Carbondale, CO 81623
970-309-5259

April 26, 2017 Project No. C1188

Slow Groovin' Holdings
Ryan Vinciguerra
ryanvinciguerra@gmail.com

Subsurface Investigation and Onsite Wastewater Treatment System Design
Gallo Hill
Town of Marble, Colorado

Ryan,

ALL SERVICE septic, LLC performed a subsurface investigation and completed an onsite wastewater treatment system (OWTS) design for the property. The property is located within the Town of Marble, where OWTSs are necessary. Original design documents dated April 1, 2017 should be discarded and replaced with design documents dated April 26, 2017.

The legal description of the 3.4-acre property is E2NW4 SEC 26 11S88W AKA TR EX1 #637723. Enclosed are Gunnison County Assessor's records on the property and a map depicting the property location.
Parcel ID: 2917-262-18-005

SITE CONDITIONS

The property is currently undeveloped. Five 2-bedroom cabins, 1028-square foot cabins are proposed on the property.

The cabins will be served potable water from the Marble Water Company. Location of the water lines were not provided on our site plan. All waterlines must be at least 25-feet from any OWTS component. If water and sewer lines cross or come within 10-feet of one another, the sewer lines must be encased (see encasement detail 2/W5.0).

Visible vegetation over the proposed soil treatment area (STA) at the time of our initial site visit included scrub oak and brush. The STA slopes at 5 to 7% to the southwest, toward the Crystal River.

No ditches or streams come within the required 90-foot[1] setback to the proposed STA.

SUBSURFACE

The subsurface was investigated on January 5, 2015 by digging two soil profile test pit excavations (Test Pits). A visual and tactile soil analysis was completed by Carla Ostberg at the time of excavation.[2]

[1] The "8-foot Rule" applies to all design flows exceeding 1000 gallons / day.
[2] Carla Ostberg holds a Certificate of Attendance and Examination from the CPOW Visual and Tactile Evaluation of Soils Training.

The materials encountered in the Test Pit #1 consisted of 18-inches of dark brown, granular topsoil, underlain by dark brown loam explored to a maximum depth of 8-feet. Angular rocks up to 4-inches in diameter were present to a depth of 5-feet. Larger angular rocks up to 8-inches in diameter were present below a depth of 5-feet. No bedrock or groundwater was encountered.

The materials encountered in Test Pit #2 were consistent with those encountered in Test Pit #1. The Test Pit was explored to a maximum depth of 8-feet. No bedrock or groundwater was encountered.

A sample of the soils was taken from Test Pit #1 at approximately 3-feet below grade. The soil formed a ball and a ribbon less than 1-inch in length before breaking. Soil structure shape was blocky, soil structure grade was moderate, and consistence was friable. Soils had both a gritty and smooth feel.

STA sizing is based on Soil Type 2, Loam, with blocky structure type and moderate structure grade. **A long term acceptance rate (LTAR) of 0.6 gallons per square foot will be used to design the OWTS, in accordance with Table 10-1 Soil Type 2 presented in the Town of Marble On-Site Wastewater Treatment System Regulations, effective July 9, 2015.**

Test Pit #1

Test Pit to 4-feet

Backfill

View of pit

Close up of sidewall below root zone

Backfill from deeper in pit (a few larger angular rocks)

Test Pit #2

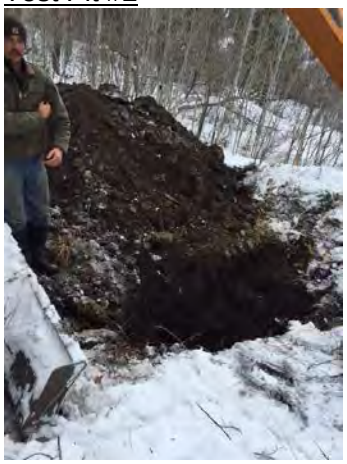

Backfill

Sidewall

View of pit

DESIGN SPECIFICATIONS

The proposed development will include five 2-bedroom cabins. Sizing of the OWTS will be based on 10 bedrooms. A design flow of 1500 gallons per day (GPD) will be used.

Design Calculations:
10 bedrooms x 75 gallons/person/day x 2 people / bedroom = 1500 GPD
Each 2-bedroom cabin will be served by a 1000-gallon, two-compartment septic tank

Long Term Acceptance Rate (LTAR) = 0.6 gal/SF
1500 GPD / 0.6 gallons/SF = 2500 SF
2500 SF x 0.8 (pressure dosed trenches) x 0.7 (chambers) = 1400 SF
1400 SF / 12 SF/'Quick 4' Infiltrator® chamber = Minimum 117 'Quick 4' Infiltrator® chambers

Plumbing from each 2-bedroom cabin will include a 4-inch diameter sewer line with a double sweep clean out within 5-feet of the cabin. A minimum 2% slope of the sewer line must be maintained from the cabins to the septic tanks. Each cabin will be served by a 1000-gallon, two-compartment septic tank with an effluent filter on the outlet tee. Effluent will gravity flow from the septic tanks to a sewer line installed

along the driveway. Where each cabin's sewer line enters the main sewer line, a clean out should be installed before the "wye". Any section of sewer line that will run under the driveway must be a minimum of Schedule 40 and placed in a trench bedded with screened rock or road base. The pipe may be covered with Blue Board insulation for additional protection against freezing.

Effluent from all septic tanks will gravity flow to a 500-gallon, concrete pump vault with **duplexing Orenco® PF3005 pumps**. The pump floats should be set to discharge approximately 80 gallons/dose. The control panel for the pumping system must be located within line of sight of the septic tank. We recommend Valley Precast out of Buena Vista be contracted for pump start-up.

Effluent will be dosed through a 2.0-inch diameter pump line from the pump chamber to two Model 6606A Automatic Distributing Valves (ADV). The ADVs must be installed at the high point in insulated risers and must be accessible from grade. The pump lines must have a minimum 1% grade for proper drain back into the septic tank.

The STA will consist of two sets of trenches, each with 6 rows of 10 'Quick 4' Standard Plus Infiltrator® chambers for a total of 120 chambers and 1440 square feet of infiltrative area. There must be at least 6-feet of undisturbed soil between each trench. Each trench must have a level base and have a maximum of 3-feet and a minimum of 1-foot of cover over the chambers.

Effluent will be pressure dosed through 1.5-inch diameter laterals, which must be hung with zip ties from the underside of the chambers. Laterals will have 5/32-inch diameter orifices facing up, with the exception of the first and last orifices facing down for drainage. Orenco® Orifice Shields should be placed on each downward facing orifice. The orifices must be placed 2-feet on center. Each lateral must end in a 90 degree ell facing up with a ball valve for flushing. Valves may be placed in a valve box, accessible from grade. Inspection ports must be placed at both the beginning and end of each trench. Inspection ports may be cut to grade and covered with a valve box for access.

The component manufacturers are typical of applications used by contractors and engineers in this area. Alternatives may be considered or recommended by contacting our office. Construction must be according to Town of Marble On-site Wastewater Treatment System Regulations, the OWTS Permit provided by the Town of Marble, the variance approved by the Town of Marble, and this design.

REVEGETATION REQUIREMENTS

An adequate layer of good quality topsoil capable of supporting revegetation shall be placed over the entire disturbed area of the OWTS installation. A mixture of native grass seed that has good soil stabilizing characteristics (but without taproots), provides a maximum transpiration rate, and competes well with successional species. No trees or shrubs, or any vegetation requiring regular irritation shall be placed over the area. Until vegetation is reestablished, erosion and sediment control measures shall be implemented and maintained on site. The owner of the OWTS shall be responsible for maintaining proper vegetation cover.

OPERATION INFORMATION AND MAINTENANCE

The property owner shall be responsible for the operation and maintenance of each OWTS servicing the property. **We recommend annual routine maintenance be conducted by a responsible, qualified person. Routine maintenance would include measuring sludge levels in the septic tanks to determine if pumping is necessary, cleaning effluent filters, checking floats and alarms, and cycling ADVs. A log of all routine maintenance must be kept and provided to the Town of Marble, if requested.**

Geo-fabrics or plastics should not be used over the STA. No heavy equipment, machinery, or materials should be placed on the backfilled STA. Livestock should not graze on the STA. Plumbing fixtures should be checked to ensure that no additional water is being discharged to OWTS. For example, a running toilet or leaky faucet can discharge hundreds of gallons of water a day and harm a STA.

The homeowner should pump the septic tank every two years, or as needed gauged by measurement of solids in the tank. Garbage disposal use should be minimized, and non-biodegradable materials should not be placed into the OWTS. Grease should not be placed in household drains. Loading from a water softener should not be discharged into the OWTS. No hazardous wastes should be directed into the OWTS. Mechanical room drains should not discharge into the OWTS. The OWTS is engineered for domestic waste only. **We recommend the property owner provide information to all occupants of the cabins regarding OWTSs. We have provided an EPA 'Septic Smart' flyer for reference and distribution.**

ADDITIONAL CONSTRUCTION NOTES

If design includes a pump, weep holes must be installed to allow pump lines to drain to minimize risk of freezing. The pump shall have an audible and visual alarm notification in the event of excessively high water conditions and shall be connected to a control breaker separate from the high-water alarm breaker and from any other control system circuits. The pump system shall have a switch so the pump can be manually operated.

Excavation equipment must not drive in excavation of the STA due to the potential to compact soil. Extensions should be placed on all septic tank components to allow access to them from existing grade. Backfill over the STA must be uniform and granular with no material greater than minus 3-inch.

INSTALLATION OBSERVATIONS

ALL SERVICE septic, LLC must view the OWTS during construction. The OWTS observation should be performed before backfill, after placement of OWTS components. Septic tanks, distribution devices, pumps, dosing siphons, and other plumbing, as applicable, must also be observed. ALL SERVICE septic, LLC should be notified 48 hours in advance to observe the installation.

LIMITS:

The design is based on information submitted. If soil conditions encountered are different from conditions described in report, ALL SERVICE septic, LLC should be notified. All OWTS construction must be according to the county regulations. Requirements not specified in this report must follow applicable county regulations. The contractor should have documented and demonstrated knowledge of the requirements and regulations of the county in which they are working. Licensing of Systems Contractors may be required by county regulation.

Please call with questions.

Sincerely,

ALL SERVICE septic, LLC

Carla Ostberg

Carla Ostberg, MPH, REHS

Reviewed By:

Richard H. Petz, PE

COLORADO LICENSED
RICHARD HERBERT PETZ
38662
PROFESSIONAL ENGINEER

Pump Selection for a Pressurized System - Multiple Family Residence Project

Gallo Hill / Town of Marble, Colorado

Parameters

Discharge Assembly Size	1.25	inches
Transport Length Before Valve	20	feet
Transport Pipe Class	40	
Transport Line Size	2.00	inches
Distributing Valve Model	6606	
Transport Length After Valve	100	feet
Transport Pipe Class	40	
Transport Pipe Size	1.50	inches
Max Elevation Lift	3	feet
Manifold Length	0	feet
Manifold Pipe Class	40	
Manifold Pipe Size	1.50	inches
Number of Laterals per Cell	12	
Lateral Length	40	feet
Lateral Pipe Class	40	
Lateral Pipe Size	1.50	inches
Orifice Size	5/32	inches
Orifice Spacing	2	feet
Residual Head	5	feet
Flow Meter	None	inches
'Add-on' Friction Losses	0	feet

Calculations

Minimum Flow Rate per Orifice	0.68	gpm
Number of Orifices per Zone	42	
Total Flow Rate per Zone	28.5	gpm
Number of Laterals per Zone	2	
% Flow Differential 1st/Last Orifice	1.8	%
Transport Velocity Before Valve	2.7	fps
Transport Velocity After Valve	4.5	fps

Frictional Head Losses

Loss through Discharge	5.7	feet
Loss in Transport Before Valve	0.3	feet
Loss through Valve	9.2	feet
Loss in Transport after Valve	4.8	feet
Loss in Manifold	0.0	feet
Loss in Laterals	0.2	feet
Loss through Flowmeter	0.0	feet
'Add-on' Friction Losses	0.0	feet

Pipe Volumes

Vol of Transport Line Before Valve	3.5	gals
Vol of Transport Line After Valve	10.6	gals
Vol of Manifold	0.0	gals
Vol of Laterals per Zone	8.5	gals
Total Vol Before Valve	3.5	gals
Total Vol After Valve	19.0	gals

Minimum Pump Requirements

Design Flow Rate	28.5	gpm
Total Dynamic Head	28.1	feet

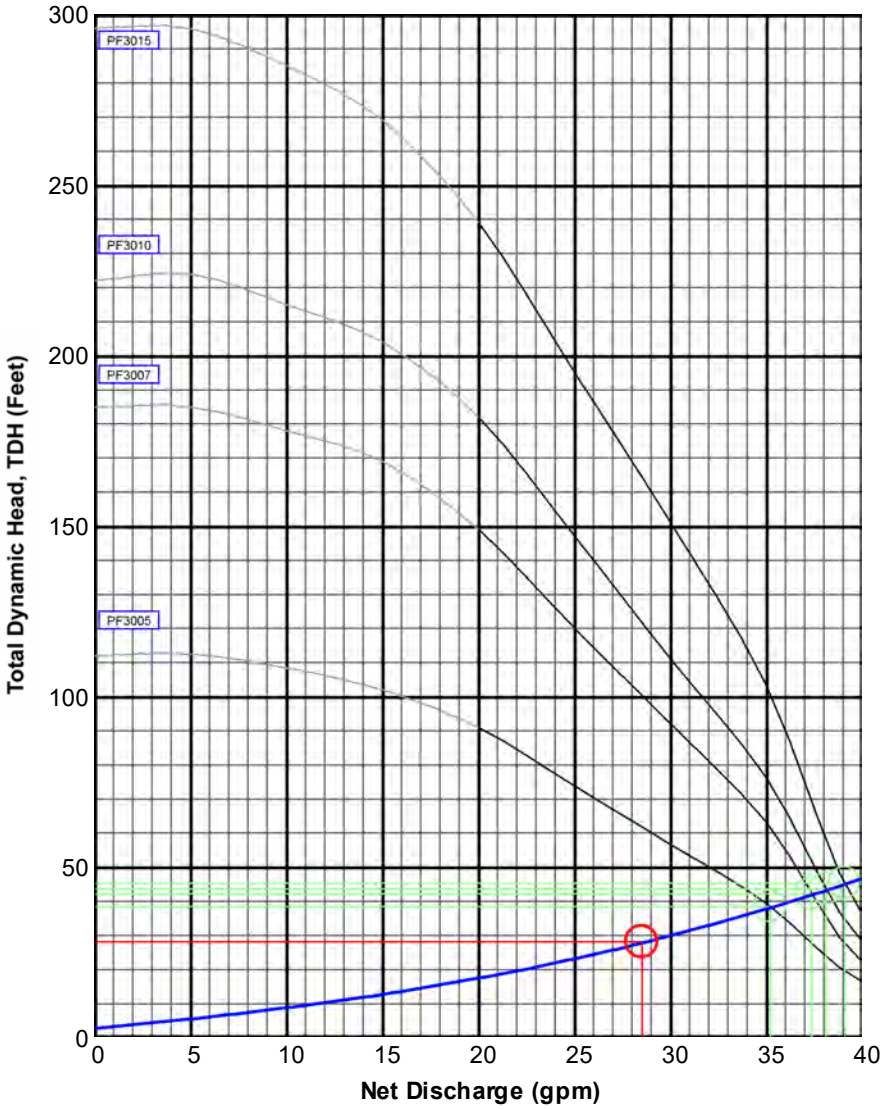

PumpData

PF3005 High Head Effluent Pump
30 GPM, 1/2HP
115/230V 1Ø 60Hz, 200V 3Ø 60Hz

PF3007 High Head Effluent Pump
30 GPM, 3/4HP
230V 1Ø 60Hz, 200/460V 3Ø 60Hz

PF3010 High Head Effluent Pump
30 GPM, 1HP
230V 1Ø 60Hz, 200/460V 3Ø 60Hz

PF3015 High Head Effluent Pump
30 GPM, 1-1/2HP
230V 1Ø 60Hz, 200/230/460V 3Ø 60Hz

Legend

System Curve:
Pump Curve:
Pump Optimal Range:
Operating Point:
Design Point:

Orenco Systems®
Incorporated
Changing the Way the World Does Wastewater®

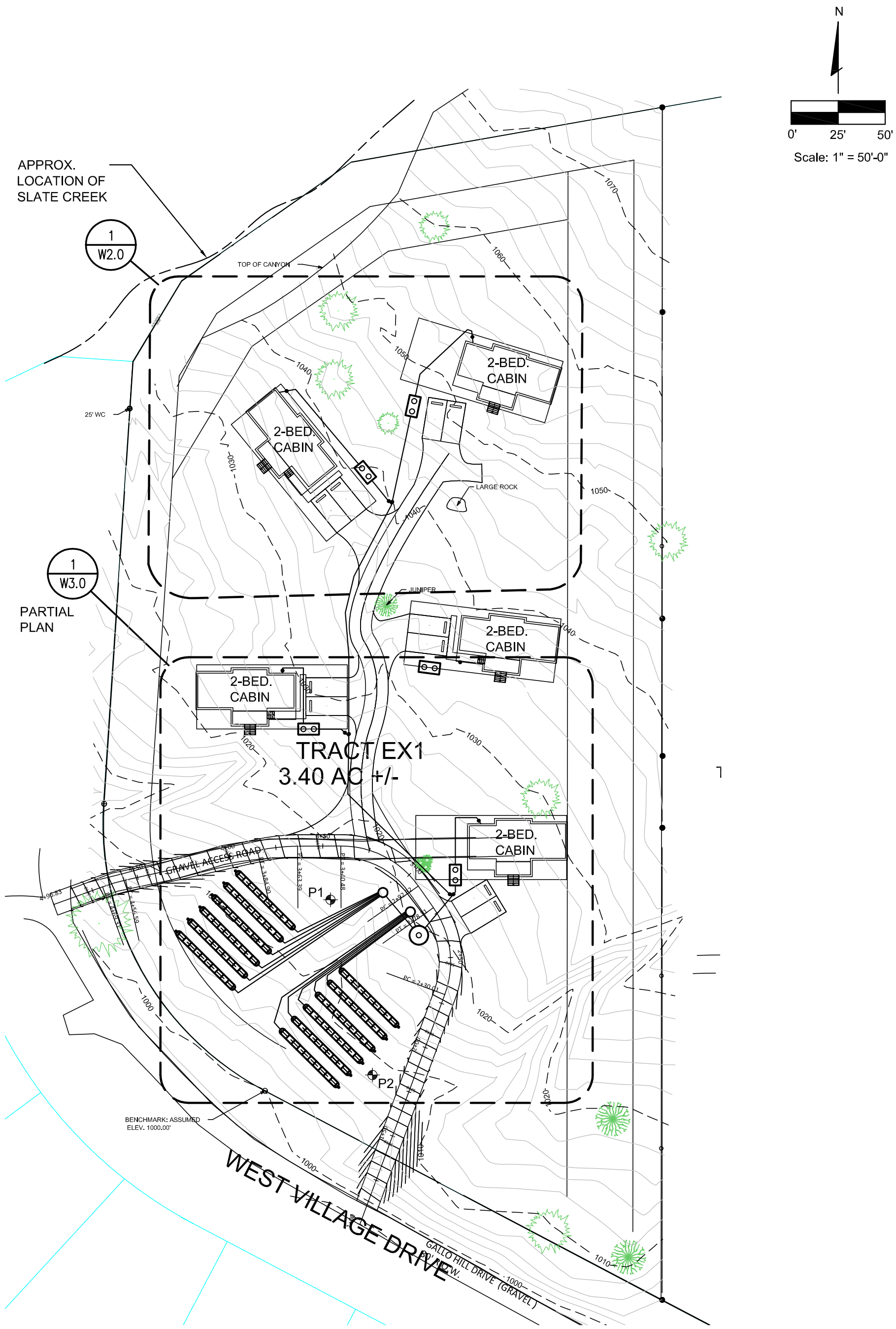

DRAWINGS MUST BE USED IN CONJUNCTION WITH DESIGN LETTER DATED 04/26/17

1 SITE PLAN
1" = 50'-0"

ALL SERVICE septic
33 Four Wheel Drive Road
Carbondale, Colorado 81623
Phone 970.309.5259
carla@allserviceseptic.com

Gallo Hill Cabins
West Village Drive
Town of Marble, Colorado

Project Number: C1188

Date: 04/01/17
Revised: 04/26/17
Designed By: CBO
Reviewed By: RHP
Drawn By: ANG

W1.0

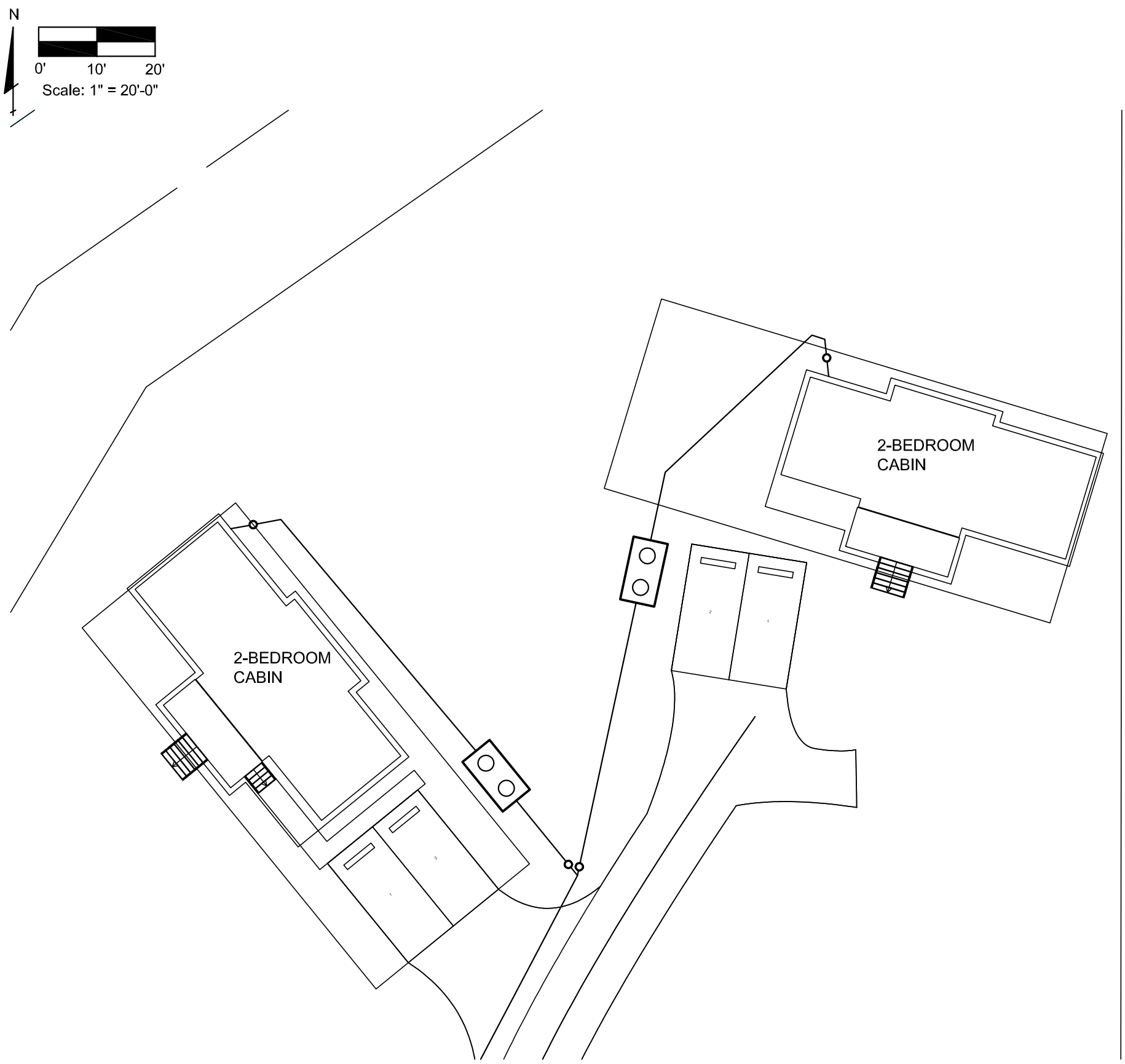

1 PARTIAL OWTS PLAN
1" = 20'-0"

ALL SERVICE septic
33 Four Wheel Drive Road
Carbondale, Colorado 81623
Phone 970.309.5259
carla@allserviceseptic.com

Gallo Hill Cabins
West Village Drive
Town of Marble, Colorado

Project Number: C1188

Date: 04/01/17
Revised: 04/26/17
Designed By: CBO
Reviewed By: RHP
Drawn By: ANG

W2.0

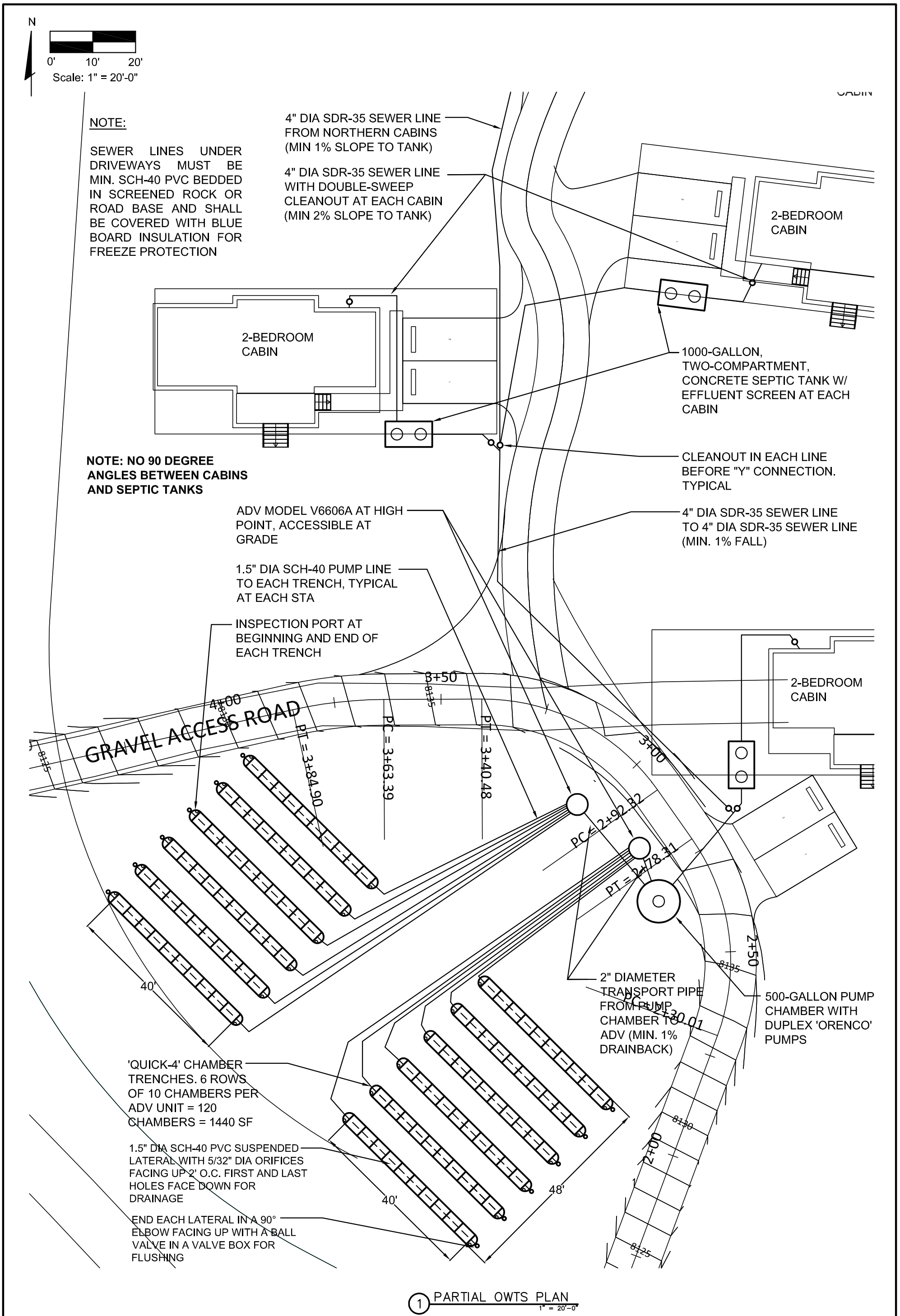

1 PARTIAL OWTS PLAN
1" = 20'-0"

ALL SERVICE septic
33 Four Wheel Drive Road
Carbondale, Colorado 81623
Phone 970.309.5259
carla@allserviceseptic.com

Gallo Hill Cabins
West Village Drive
Town of Marble, Colorado

Project Number: C1188

Date: 04/01/17
Revised: 04/26/17
Designed By: CBO
Reviewed By: RHP
Drawn By: ANG

W3.0

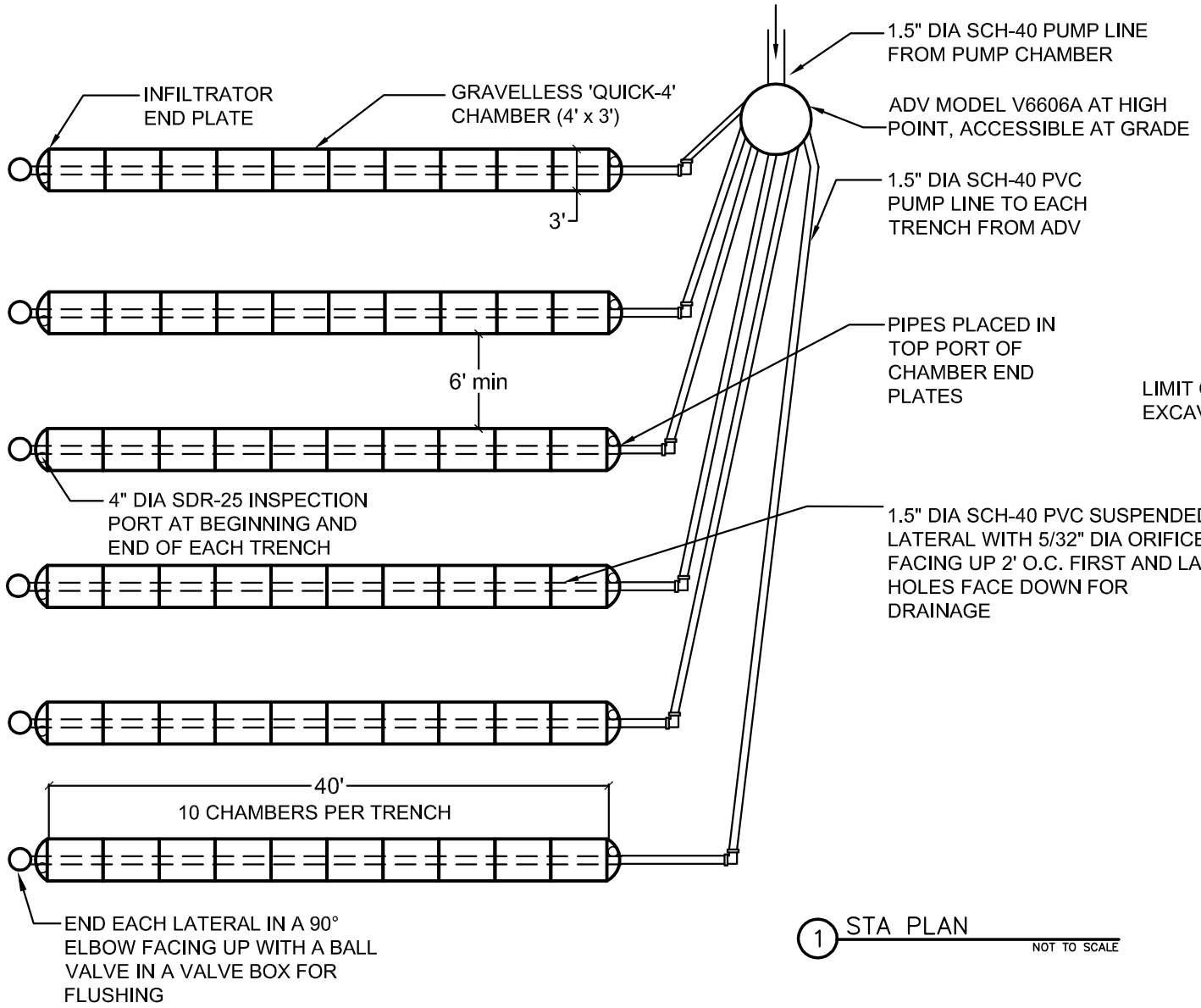

1 STA PLAN
NOT TO SCALE

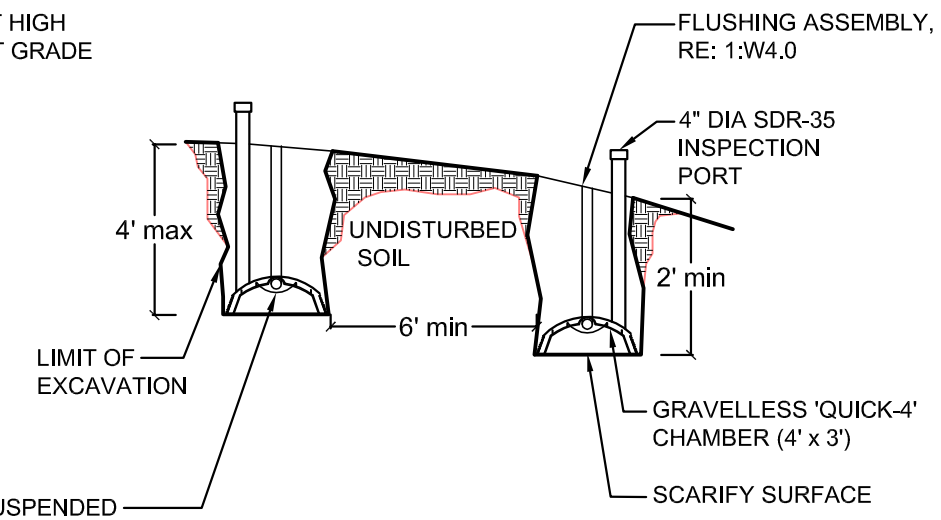

2 STA SECTION
NOT TO SCALE

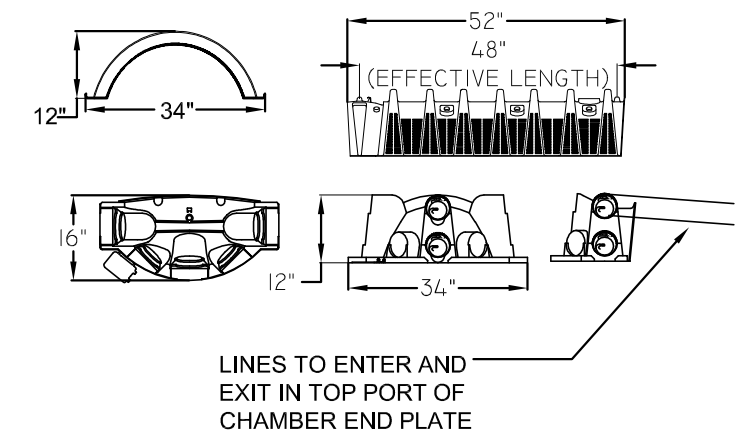

3 CHAMBER DETAILS
NOT TO SCALE

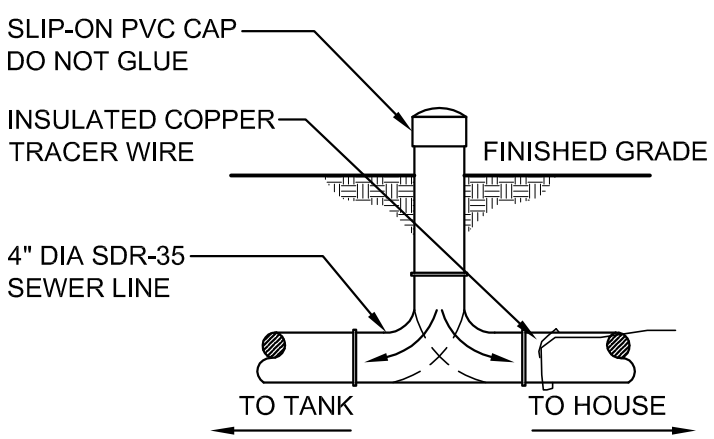

4 CLEANOUT DETAILS
NOT TO SCALE

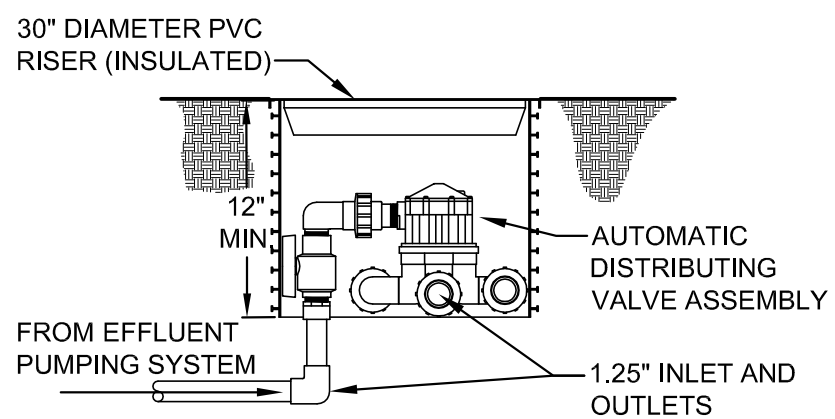

5 ADV DETAILS
NOT TO SCALE

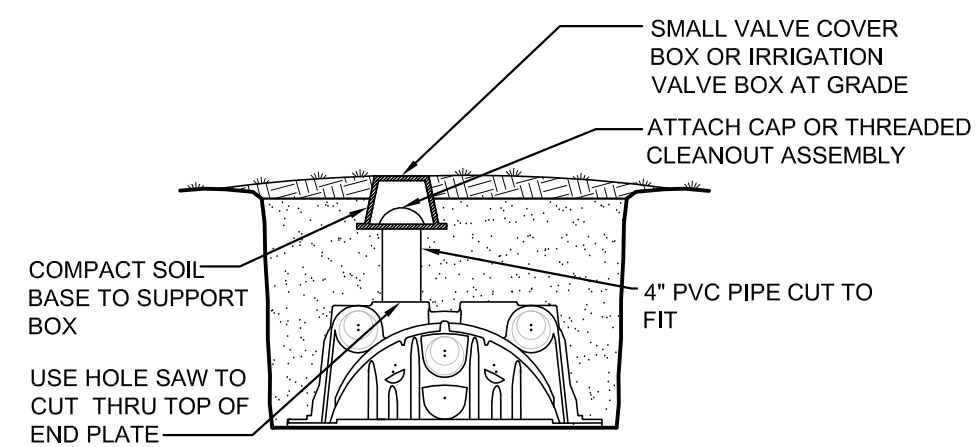

6 INSPECTION PORT DETAIL
NOT TO SCALE

ALL SERVICE septic
33 Four Wheel Drive Road
Carbondale, Colorado 81623
Phone 970.309.5259
carla@allserviceseptic.com

Gallo Hill Cabins
West Village Drive
Town of Marble, Colorado

Project Number: C1188

Date: 04/01/17
Revised: 04/26/17
Designed By: CBO
Reviewed By: RHP
Drawn By: ANG

W4.0

DESIGN

(5) 2-BEDROOM CABINS
(75 GAL/PERSON/DAY x 2 PERSONS/BEDROOM x 10 BEDROOMS)
WASTEWATER FLOW = 1500 GALLONS

TANK:
EACH 2-BEDROOM CABIN TO BE SERVED BY 1000-GALLON,
TWO-COMPARTMENT SEPTIC TANKS

SOIL TREATMENT AREA (STA):
LONG TERM ACCEPTANCE RATE (LTAR) = 0.6 GAL/ SQ FT
CALCULATED STA = Q/LTAR = 1500 / 0.6 = 2500 SF
PRESSURE DOSED TRENCHES = 2500 SF X 0.8 = 2000 SF
CHAMBERS = 2000 SF X 0.7 = 1400 SF / 12 SF / CHAMBER = 117 CHAMBERS
TWELVE GRAVELLESS CHAMBER TRENCHES
10 'QUICK 4' CHAMBERS IN EACH TRENCH
TOTAL 120 'QUICK 4' CHAMBERS

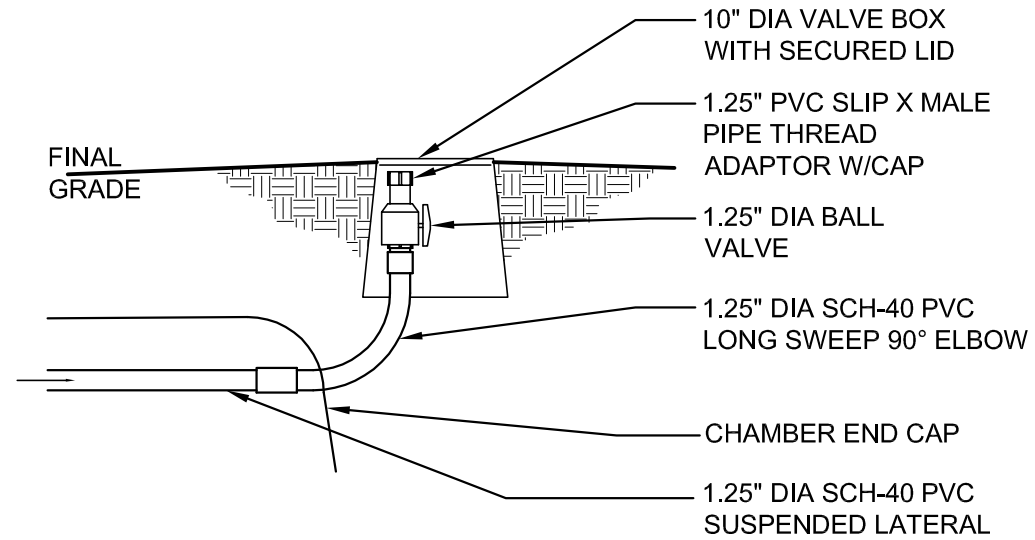

1 FLUSHING DETAIL
NOT TO SCALE

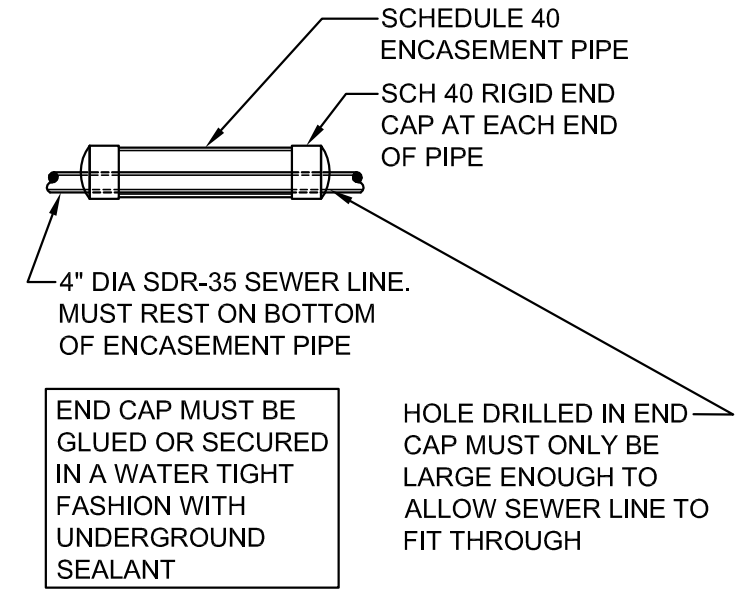

2 ENCASEMENT DETAIL
NOT TO SCALE

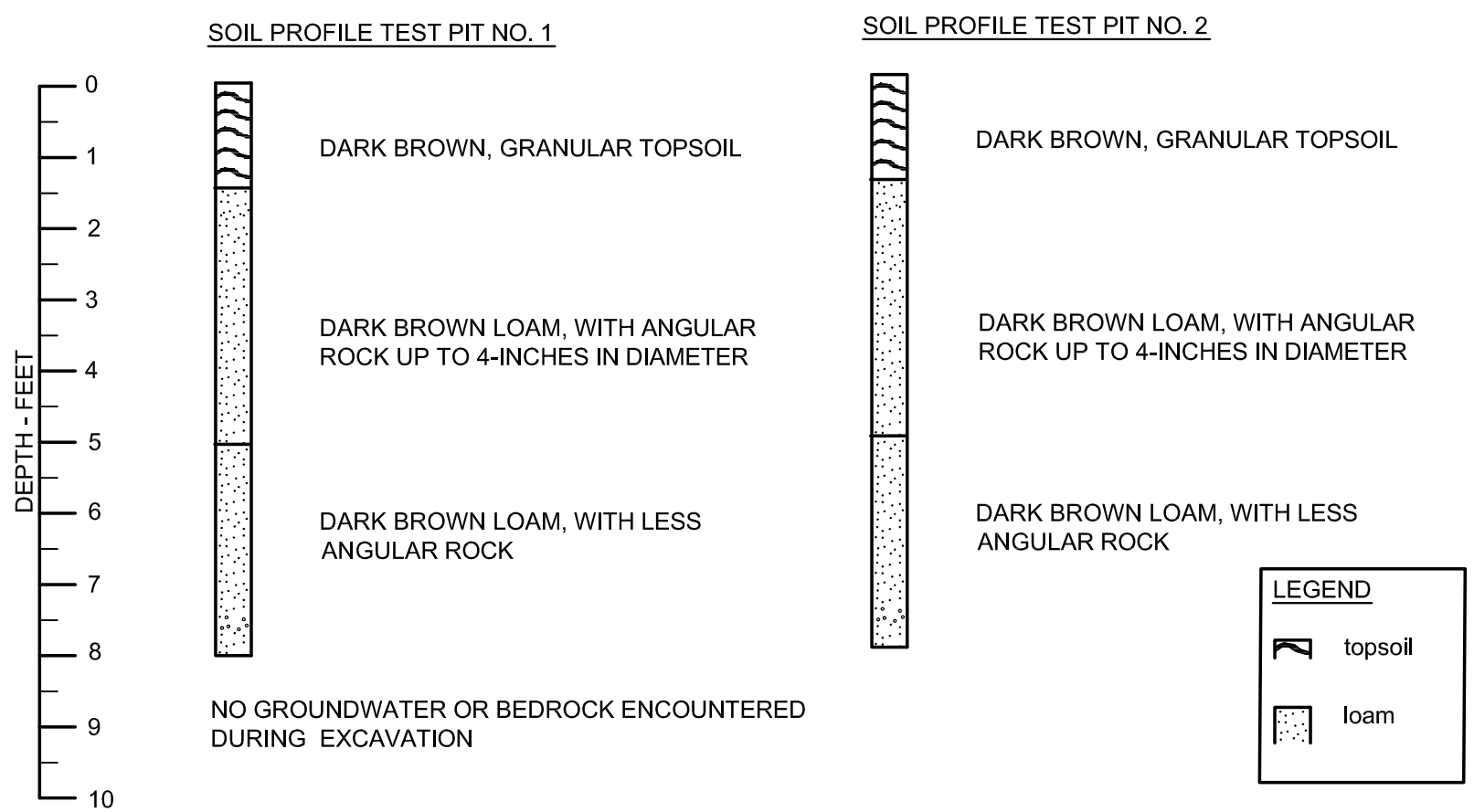

3 SOIL LOGS
NOT TO SCALE

ALL SERVICE septic
33 Four Wheel Drive Road
Carbondale, Colorado 81623
Phone 970.309.5259
carla@allserviceseptic.com

Gallo Hill Cabins
West Village Drive
Town of Marble, Colorado

Project Number: C1188

Date: 04/01/17
Revised: 04/26/17
Designed By: CBO
Reviewed By: RHP
Drawn By: ANG

W5.0

Assessor Quick Links
Gunnison Assessor Home
Find Property Records

Gunnison County COLORADO

Assessor Property Record Search

Property Record Card (PRC)

Owner and Parcel Information

Owner Name & Mailing Address	
SLOW GROOVIN HOLDING LLC 101 W 1ST ST MARBLE, CO 81623-9375	
Business Name:	NA

Today's Date:	April 3, 2017
Appraisal Year:	2017

Account Number:	R014058
Parcel Number:	2917-262-18-005
Account Type:	Vacant
Economic Area:	Econ Area 8
Tax District:	400
Mill Levy:	64.449

Property Location:	,
Neighborhood:	81840
LEA:	MSA VAC >1AC YR ROUND (81840)
Subdivision:	
Condo:	
Legal Description:	3.4 ACRE TRACT IN E2NW4 SEC 26 11S88W AKA TR EX1 #637723
Parcel Notes	BOUNDRY LINE REC#475046 REC#474588 REC #485394 REC #485393 REC #485392 QCD #546395 INTEREST IN WELL PERMIT #206266 TOTAL PARCEL = 3.40 AC

Parcel Map	Show Parcel Map
Building Photos	Building Images
Building Sketches	NA

Generate Neighboring Owner List by Distance

Search Sales By Subdivision

2016 Assessment Information *(2017 reappraisal values will be posted by May 1, 2017)*

Land Actual Value	Land Assessed Value	Building Actual Value	Building Assessed Value	Total Actual Value	Total Assessed Value
$61,300	$17,780			$61,300	$17,780

Prior Year Assessment Information

Year	Actual Value	Assessed Value	Mill Levy	Ad Valorem Taxes
2016	$61,300	$17,780	64.449	$1,145.91

2015	$61,300	$17,780	63.824	$1,134.78
2014	$79,800	$23,140	63.742	$1,474.98
2013	$79,800	$23,140	57.328	$1,326.57
2012	$110,000	$31,900	54.012	$1,722.99
2011	$110,000	$31,900	54.074	$1,724.96
2010	$110,000	$31,900	48.105	$1,534.55
2009	$110,000	$31,900	46.952	$1,497.76
2008	$77,350	$22,430	49.035	$1,099.84
2007	$77,350	$22,430	43.621	$978.40
2006	$72,500	$21,030	51.320	$1,079.24
Contact the Treasurer's Office for current property tax amount due. Do not use the figures above to pay outstanding property taxes.				

Land Information

Land Description	Land Type	Acres	Site Access	Electricity	Sewer	Water	Other Attributes
1 AC TO L/T 5 AC	Vacant	3.400	YEAR AROUND PRIVATELY MAINTAINED	NOT INSTAL	ISDS ALLOWED NOT INSTALLED	NOT INSTALLED	LAND TYPE PRIMARY - MEADOW LAND TYPE SECONDARY - TREE SITE IMPROVEMENTS - UNIMPROVED DIRT DRIVEWAY TREE TYPE - ASPEN TREE TYPE - EVERGREEN TREE TYPE - PINON JUNIPER TREE TYPE - SCRUB OAK UNIQUE CHARACTERISTICS - OVER SIZED LOT UNIQUE CHARACTERISTICS - CUL DE SAC VIEWS - PANORAMIC OR OUTSTANDING

Sales and Conveyance Information

Sale Date	Sale Amount	Adjusted Sales Price	Grantor	Grantee	Vacant or Improved (at time of sale)	Reception #	Deed Type
01/29/2016	$175,000	$175,000	DENTON H DONALD ETAL	SLOW GROOVIN HOLDING LLC	Vacant	637723	WARRANTY DEED - FEE
09/10/2004	$145,000	$145,000	JOHNSON ANN E ETAL	DENTON H DONALD ETAL	Vacant	546394	WARRANTY DEED - FEE
11/16/2003		$0	JOHNSON ANN E ETAL	JOHNSON ANN E	Vacant	537697	QUIT CLAIM DEED - NO FEE
11/16/2003		$0	JOHNSON ANN E ETAL	JOHNSON KEVIN J	Vacant	537696	QUIT CLAIM DEED - NO FEE
10/22/1999	$84,500	$84,500	VAN SCHAACK HENRY C	JOHNSON ANN E ETAL	Vacant	497482	WARRANTY DEED - FEE

05/19/1997	$75,000	$75,000	MARBLE RANCHES CO	VAN SCHAACK HENRY C ETAL	Vacant	475727	WARRANTY DEED - FEE

The Gunnison County Assessor's Office makes every effort to produce the most accurate information possible. No warranties, expressed or implied, are provided for the data herein, its use or interpretation. All assessment information is subject to change before the next certified tax roll. Website Updated: April 2, 2017

© 2012 by the County of Gunnison, CO | Website design by qpublic.net

Gunnison County Assessor

Parcel: 2917-262-18-005 Acres: 3.4

Name:	SLOW GROOVIN HOLDING LLC	Land Value:	61300
Site:	,	Building Value:	0
Sale:		Total Value:	61300
Mail:	101 W 1ST ST MARBLE, CO 81623-9375	Assessed Value:	17780
		2013 Taxes	

Date printed: 04/03/17 : 15:07:37

Gunnison County Assessor			
Parcel: 2917-262-18-005 Acres: 3.4			
Name:	SLOW GROOVIN HOLDING LLC	Land Value:	61300
Site:	,	Building Value:	0
Sale:		Total Value:	61300
Mail:	101 W 1ST ST MARBLE, CO 81623-9375	Assessed Value:	17780
		2013 Taxes	

Date printed: 04/01/17 : 18:47:07

Item #
1000T-2CP

1000 Gallon Top Seam Two Compartment

Top View

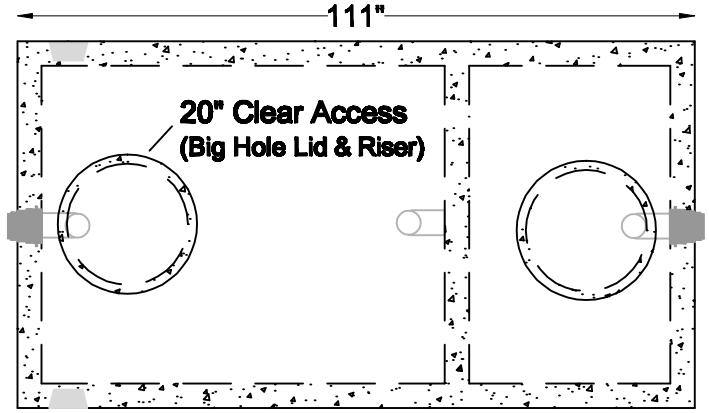

Section View

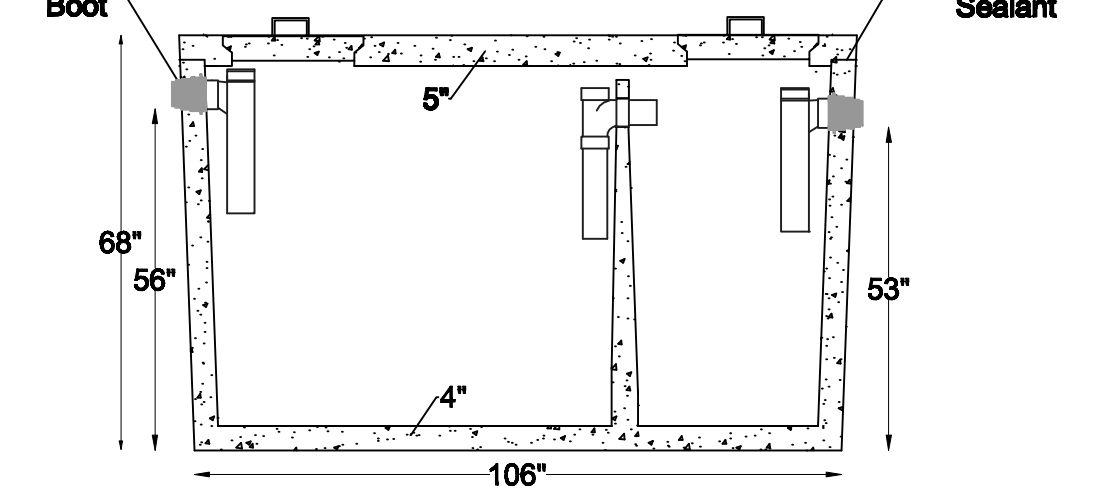

Digging Specs	Invert		Dimensions		
11' Long x 7' Wide 56" below inlet invert	Inlet 56"	Outlet 53"	Length 111"	Width 60"	Height 68"

***Meets ASTM C-1227 spec including C-1644-06 for resilient connectors**

- 6000 psi concrete
- Delivered complete with internal piping
- PVC, poly or concrete risers available
- Option of pump or siphon installed

Net Capacity		
Inlet Side	Outlet Side	Total
687 gallons	323 gallons	1,010 gallons

Net Weight		
Lid	Tank	Total
2,620 lbs	9,380 lbs	12,000 lbs

VALLEY PRECAST, Inc.

Water & Wastewater
- Systems
- Products
- Service

(719) 395-6764

Fax: (719) 395-3727
Website: www.valleyprecast.com
Email: frontdesk@valleyprecast.com

28005 Co. Rd. 317
P.O. Box 925
Buena Vista, CO 81211

Residential Biotube® Effluent Filters

Applications

Our patented* 4-in. (100-mm) Biotube Effluent Filters, Biotube Jr., Biotube Insert Filters, and Biotube Base Inlet Filters are ideal for residential septic tanks and have a lifetime warranty. They prevent large solids from leaving the tank, dramatically improving wastewater quality and extending the life of residential drainfields.

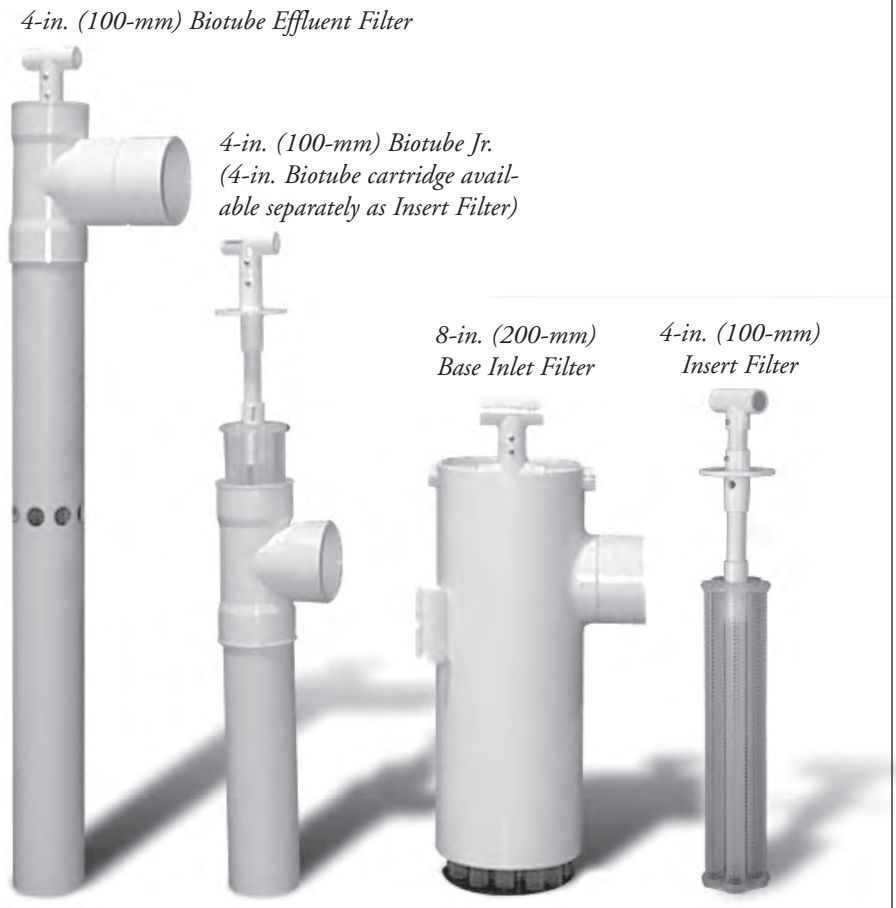

Orenco's superior effluent filters resist clogging better than all other brands. Our standard, full-sized 4-in. (100-mm) Biotube Effluent Filter provides maximum long-term protection in a complete package, with housing. Our 4-in. (100-mm) Biotube Jr., at half the size of our standard model, has more filtering capacity than the full-sized filters sold by other manufacturers. For tanks with existing outlet tees, the Biotube Insert Filter is ideal. And for low-profile tanks, there's the Base Inlet Filter.

* Covered by patent numbers 5,492,635 and 4,439,323

To Order

Call your nearest Orenco Systems®, Inc. distributor. For nearest distributor, call Orenco at 800-348-9843 or go to www.orenco.com and click on "Distributor Locator."

APS-FT-1
Rev. 3.4 © 11/10
Orenco Systems®, Inc.

Standard Features & Benefits

- Has 5-10 times more flow area than other brands, so lasts many times longer between cleanings, increasing homeowner satisfaction
- Installs in minutes inside new or existing tanks; extendible tee handle for easy removal
- Easy to clean by simply hosing off whenever the tank needs pumping
- Removes about two-thirds of suspended solids, on average, extending drainfield life
- Corrosion-proof construction, to ensure long life
- Lifetime warranty

Optional Features & Benefits

- Alarm available, to signal the need for cleaning
- Flow modulating discharge orifices available to limit flow rate leaving tank, mitigating surges and increasing retention time
- Custom and commercial sizes available

Biotube Filtering Process

Effluent from the relatively clear zone of the septic tank, between the scum and sludge layers, horizontally enters the Biotube Effluent Filter. Effluent then enters the annular space between the housing and the Biotubes, utilizing the Biotubes' entire surface for filtering. Particles larger than the Biotube's mesh are prevented from leaving the tank.

Orenco Systems®
Incorporated

Changing the Way the World Does Wastewater®

www.orenco.com

Nomenclatures

4-in. Biotube Filter (standard)

FT □ □ 04 □□ - □□ □□□

- Options:
  - Blank = no options
  - M = flow modulation plate installed
  - A = float bracket attached
- Cartridge height: 28" and 36" are standard
- Housing height: 36" and 44" are standard
- Filter diameter (inches)
- W = fits Type 3034 outlet pipe
  - S = fits Schedule 40 outlet pipe
- Blank = 1/8" filtration
  - P = 1/16" filtration
- Biotube effluent filter series

8-in. Biotube Filter (base inlet model)

FT □ 08 22 - 14 B □□□

- Options:
  - A = float bracket
  - FS = 2" outlet orifice
  - FSO = 2" outlet orifice and overflow plate*
- Base inlet model
- Cartridge height: 14" standard
- Housing height: 22" standard
- Filter diameter (inches)
  - 08 = 8"
- Blank = 1/8" filtration
  - P = 1/16" filtration
- Biotube effluent filter series

* Also available with coupling and sleeve as a "kit": FT-OVERFLOWKIT

4-in. Biotube Jr. (includes cartridge and housing)

FT J □ □ 04 18 □□□

- Options:
  - Blank = no options
  - M = flow modulation plate installed
  - A = float bracket attached
- Cartridge height (inches)
- Filter diameter (inches)
- W = fits Type 3034 outlet tee
  - S = fits Schedule 40 outlet tee
- Blank = 1/8" filtration
  - P = 1/16" filtration
- Junior series
- Biotube effluent filter series

4-in. Biotube Filter Insert (cartridge only)

FT i □ 04 18 - □ - □□□

- For customized options (e.g., NC indicates North Carolina regions)
- W = fits Type 3034 outlet tee
  - S = fits Schedule 40 outlet tee
- Cartridge height (inches)
- Filter diameter (inches)
- Blank = 1/8" filtration
  - P = 1/16" filtration
- Insert
- Biotube effluent filter series

4-in. Biotube Effluent Filter

4-in. Biotube Jr.

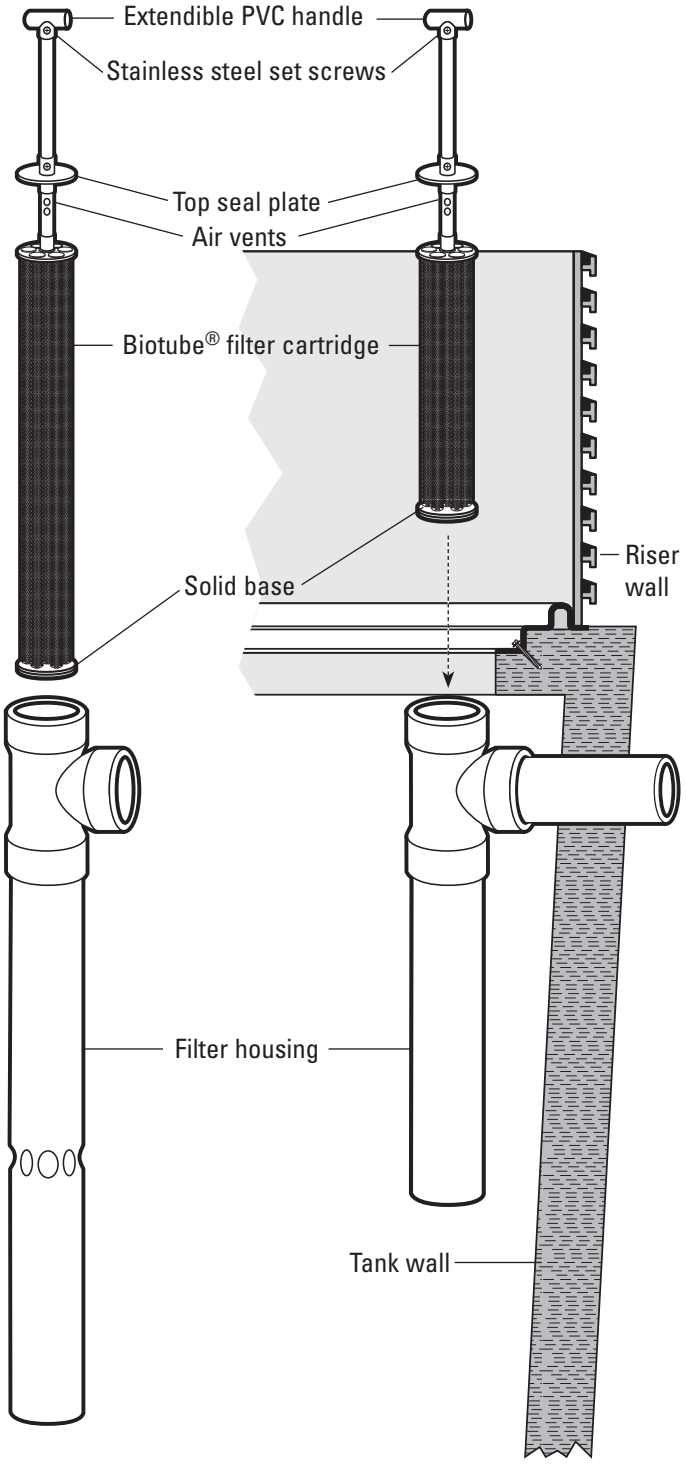

Distributed By:

Item # 500T-HH

500 Gallon Top Seam with High Head Pump

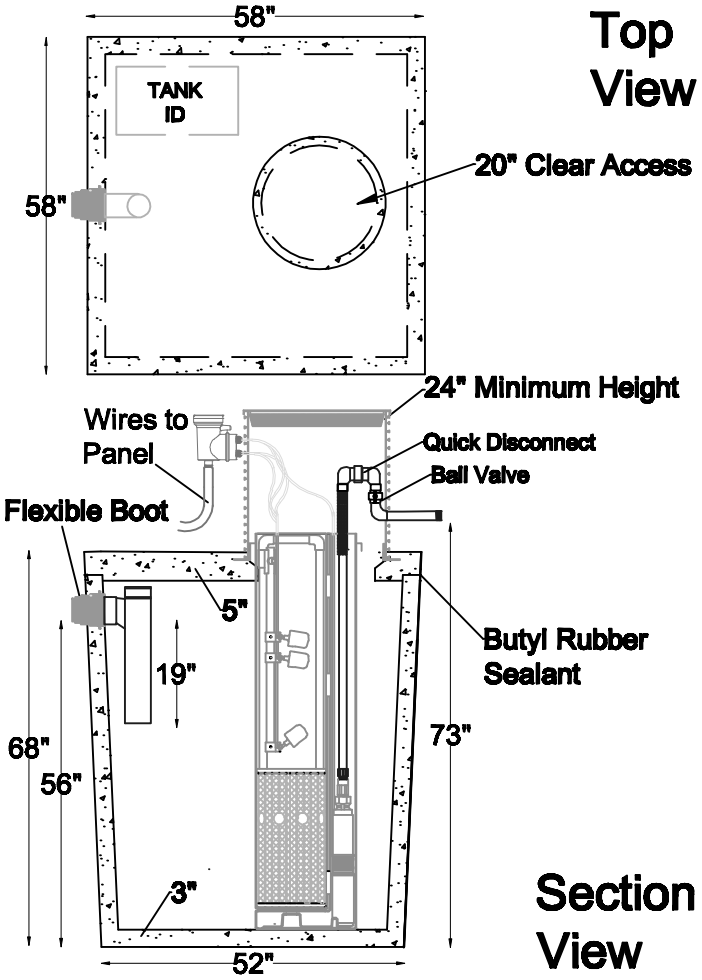

DESIGN NOTES
- Design per performance test per ASTM C1227
- Top surface area 23.4 ft^2
- f'c @ 28 days; concrete = 6,000 PSI Min.

Installation:
- Tank to be set on 5" min. sand bed or pea gravel
- Tank to be backfilled uniformly on all sides in lifts less than 24" and mechanically compacted
- Excavated material may be used for backfill, provided large stones are removed
- Excavation should be dewatered and tank filled with water prior to being put in service for installation with water table less than 2' below grade
- Meets C1644–06 for resillent connectors
- Inlet and Outlet identified above pipe
- Delivered complete with internal piping
- PVC risers available
- Secondary safety screen available with PVC riser

ALLOWABLE BURY (Based on Water Table)	
WATER TABLE	ALLOWABLE EARTH FILL
0' – 0"	3' – 0"
1' – 0"	4' – 0"
2' – 0"	4' – 0"
3' – 0"	4' – 0"
DRY	4' – 0"

Pump:
- Lowers TSS and improves effluent quality to field
- Easiest pump system to maintain on the market
- Complete installation (wiring, panel, mounting and start-up procedures)
- Complete warranty

Service contracts available for maintenance.

Digging Specs	Invert		Dimensions			Net Capacity	Net Weight		
					Min.		Lid	Tank	Total
7' Long x 7' Wide 56" below inlet	Inlet 56"	Outlet 73"	Length 58"	Width 58"	Height 92"	522 gallons	1,340 lbs	4,100 lbs	5,640 lbs

VALLEY PRECAST, Inc.

Water & Wastewater
- Systems
- Products
- Service

(719) 395-6764

Fax: (719) 395-3727
Website: www.valleyprecast.com
Email: frontdesk@valleyprecast.com

28005 Co. Rd. 317
P.O. Box 925
Buena Vista, CO 81211

Orenco® *Technical Data Sheet*

Biotube® ProPak Pump Package™

60-Hz Series Pump Packages

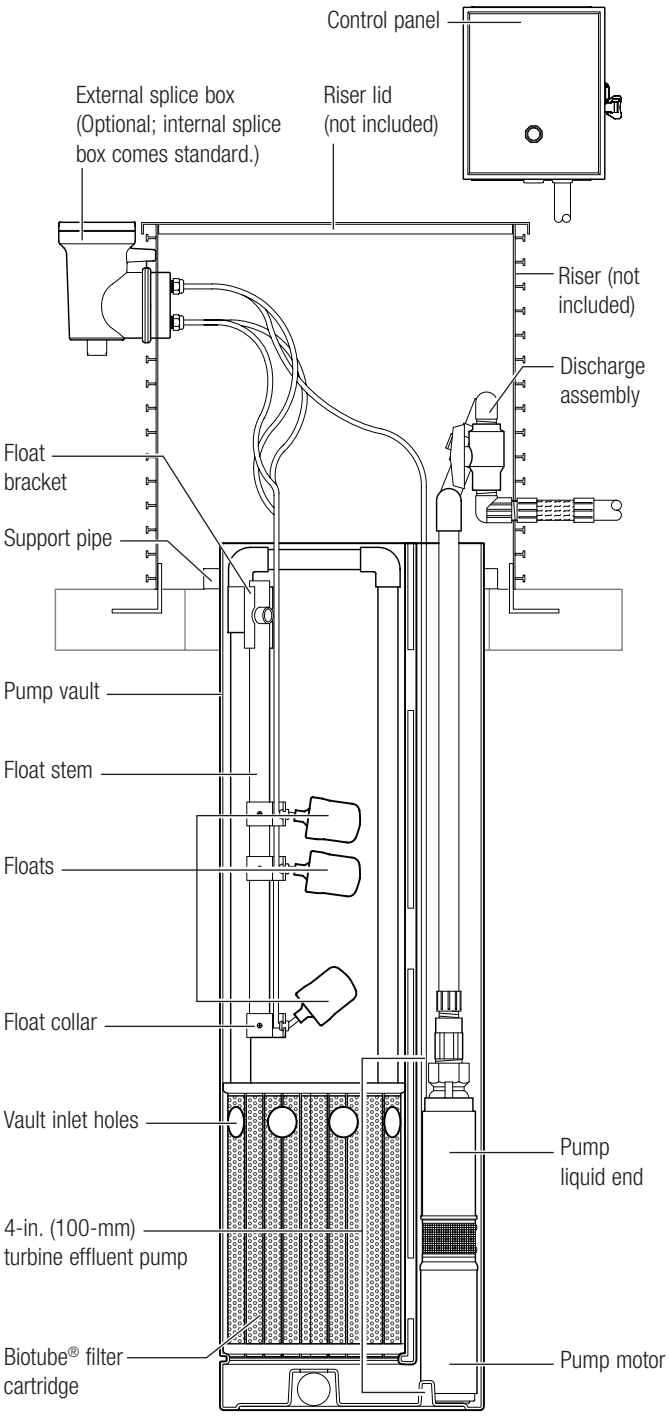

Biotube® ProPak™ pump package components.

General

Orenco's Biotube® ProPak™ is a complete, integrated pump package for filtering and pumping effluent from septic tanks. And its patented pump vault technology eliminates the need for separate dosing tanks.

This document provides detailed information on the ProPak pump vault and filter, 4-in. (100-mm) 60-Hz turbine effluent pump, and control panel. For more information on other ProPak components, see the following Orenco technical documents:

- *Float Switch Assemblies* (NSU-MF-MF-1)
- *Discharge Assemblies* (NTD-HV-HV-1)
- *Splice Boxes* (NTD-SB-SB-1)
- *External Splice Box* (NTD-SB-SB-1)

Applications

The Biotube ProPak is designed to filter and pump effluent to either gravity or pressurized discharge points. It is intended for use in a septic tank (one- or two-compartment) and can also be used in a pump tank.

The Biotube ProPak is designed to allow the effluent filter to be removed for cleaning without the need to remove the pump vault or pump, simplifying servicing.

Complete packages are available for on-demand or timed dosing systems with flow rates of 20, 30, and 50-gpm (1.3, 1.9, and 3.2 L/sec), as well as with 50 Hz and 60 Hz power supplies.

Standard Models

BPP20DD, BPP20DD-SX, BPP30TDA, BPP30TDD-SX, BBPP50TDA, BPP50TDD-SX

Product Code Diagram

BPP ☐ ☐ ☐ - ☐

Standard options:
Blank = 57-in. (1448-mm) vault height, internal splice box, standard discharge assembly
68 = 68-in. (1727-mm) vault height
SX = external splice box
CW = cold weather discharge assembly
DB = drainback discharge assembly
Q = cam lock
MFV = non-mercury float

Control panel application:
DD = demand-dosing
TDA = timed-dosing, analog timer
TDD = timed dosing, digital timer, elapsed time meter & counters

Pump flow rate, nominal:
20 = 20 gpm (1.3 L/sec)
30 = 30 gpm (1.9 L/sec)
50 = 50 gpm (3.2 L/sec)

Biotube® ProPak™ pump vault

ProPak™ Pump Vault

Materials of Construction	
Vault body	Polyethylene
Support pipes	PVC
Dimensions, in. (mm)	
A - Overall vault height	57 (1448) or 68 (1727)
B - Vault diameter	17.3 (439)
C - Inlet hole height	19 (475)
D - Inlet hole diameter (eight holes total)	2 (50)
E - Vault top to support pipe bracket base	3 (76)
F - Vault bottom to filter cartridge base	4 (102)

Biotube® Filter Cartridge

Materials of Construction	
Filter tubes	Polyethylene
Cartridge end plates	Polyurethane
Handle assembly	PVC
Dimensions, in. (mm)	
A - Cartridge height	18 (457)
B - Cartridge width	12 (305)
Performance	
Biotube® mesh opening	0.125 in. (3 mm)*
Total filter flow area	4.4 ft^2 (0.4 m^2)
Total filter surface area	14.5 ft^2 (1.35 m^2)
Maximum flow rate	140 gpm (8.8 L/sec)

**0.062-in. (1.6-mm) filter mesh available*

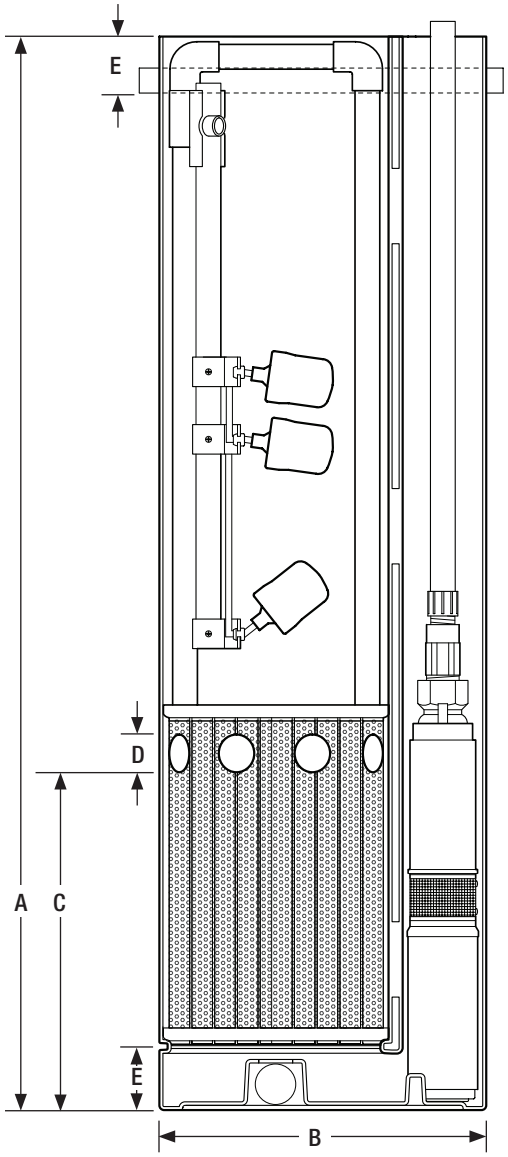

ProPak™ pump vault (shown with Biotube filter and effluent pump)

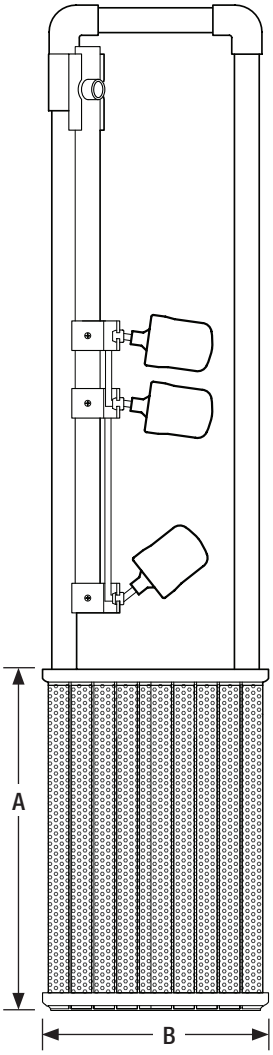

Biotube® filter cartridge (shown with float switch assembly)

Orenco Systems® Inc. , 814 Airway Ave., Sutherlin, OR 97479 USA • 800-348-9843 • 541-459-4449 • www.orenco.com

4-in. (100-mm) Turbine Effluent Pumps

Orenco's 4-in. (100 mm) Turbine Effluent Pumps are constructed of lightweight, corrosion-resistant stainless steel and engineered plastics; all are field-serviceable and repairable with common tools. All 60-Hz PF Series models are CSA certified to the U.S. and Canadian safety standards for effluent pumps, and meet UL requirements.

Power cords for Orenco's 4-in. (100-mm) turbine effluent pumps are Type SOOW 600-V motor cable (suitable for Class 1, Division 1 and 2 applications).

Materials of Construction

Discharge:	Stainless steel or glass-filled polypropylene
Discharge bearing:	Engineered thermoplastic (PEEK)
Diffusers:	Glass-filled PPO
Impellers:	Acetal (20-, 30-gmp), Noryl (50-gpm)
Intake screens:	Polypropylene
Suction connection:	Stainless steel
Drive shaft:	300 series stainless steel
Coupling:	Sintered 300 series stainless steel
Shell:	300 series stainless steel
Lubricant:	Deionized water and propylene glycol

Specifications

Nom. flow, gpm (L/sec)	Length in. (mm)	Weight lb (kg)	Discharge in., nominal [1]	Impellers
20 (1.3)	22.5 (572)	26 (11)	1.25	4
30 (1.9)	21.3 (541)	25 (11)	1.25	3
50 (3.2)	20.3 (516)	27 (12)	2.00	2

Performance

Nom. flow, gpm (L/sec)	hp (kW)	Design flow amps	Rated cycles/day	Min liquid level, in. (mm) [2]
20 (1.3)	0.5 (0.37)	12.3	300	18 (457)
30 (1.9)	0.5 (0.37)	11.8	300	20 (508)
50 (3.2)	0.5 (0.37)	12.1	300	24 (610)

[1] *Discharge is female NPT threaded, U.S. nominal size, to accommodate Orenco® discharge hose and valve assemblies. Consult your Orenco Distributor about fittings to connect discharge assemblies to metric-sized piping.*

[2] *Minimum liquid level is for single pumps when installed in an Orenco Biotube® ProPak™ Pump Vault.*

Pump Curves

Pump curves, such as those shown here, can help you determine the best pump for your system. Pump curves show the relationship between flow (gpm or L/sec) and pressure (TDH), providing a graphical representation of a pump's performance range. Pumps perform best at their *nominal flow rate*, measured in gpm or L/sec.

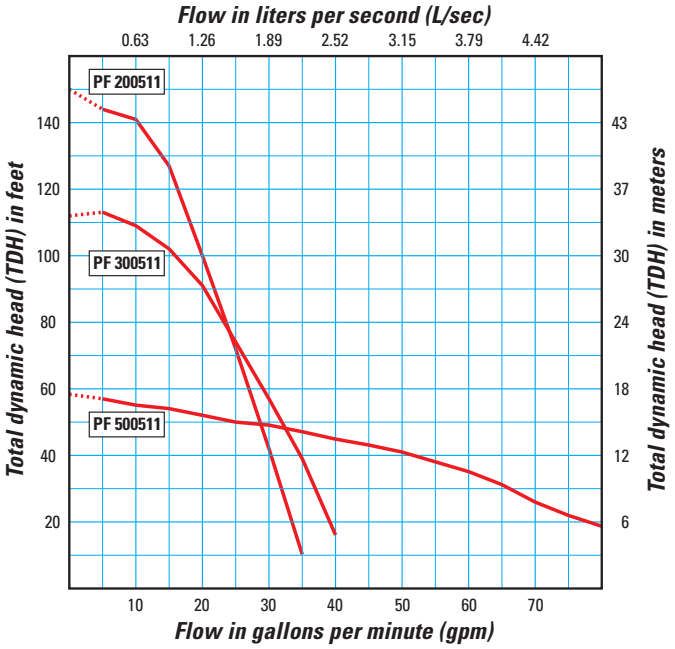

Control Panel (Demand Dose)

Orenco's ProPak™ demand dose control panels are specifically engineered for the ProPak pump package and are ideal for applications such as demand dosing from a septic tank into a conventional gravity drainfield.

Materials of Construction

Enclosure	UV-resistant fiberglass, UL Type 4X
Hinges	Stainless steel

Dimensions, in. (mm)

A - Height	11.5 (290)
B - Width	9.5 (240)
C - Depth	5.4 (135)

Specifications

Panel ratings	120 V, 3/4 hp (0.56 kW), 14 A, single phase, 60 Hz
1. Motor-start contactor	16 FLA, 1 hp (0.75 kW), 60 Hz; 2.5 million cycles at FLA (10 million at 50% of FLA)
2. Circuit	120 V, 10 A, OFF/ON switch, Single pole breakers
3. Toggle switch	Single-pole, double-throw HOA switch, 20 A
4. Audio alarm	95 dB at 24 in. (600 mm), warble-tone sound, UL Type 4X
5. Audio alarm	120 V, automatic reset, DIN rail mount silence relay
6. Visual alarm	7/8-in. (22-mm) diameter red lens, "Push-to-silence," 120 V LED, UL Type 4X

Control Panel (Timed Dose)

Orenco's ProPak timed dose control panels are specifically engineered for the ProPak pump package and are ideal for applications such as timed dosing from a septic tank into a pressurized drainfield or mound. Analog or digital timers are available.

Materials of Construction

Enclosure	UV-resistant fiberglass, UL Type 4X
Hinges	Stainless steel

Dimensions, in. (mm)

A - Height	11.5 (290)
B - Width	9.5 (240)
C - Depth	5.4 (135)

Specifications

Panel ratings	120 V, 3/4 hp (0.56 kW), 14 A, single phase, 60 Hz
Dual-mode	Programmable for timed- or demand-dosing (digital timed-dosing panels only)
1a. Analog timer (not shown)	120 V, repeat cycle from 0.05 seconds to 30 hours. Separate variable controls for OFF and ON time periods
1b. Digital timer (shown below)	120-V programmable logic unit with built-in LCD screen and programming keys. Provides control functions and timing for panel operation
2. Motor-start contactor	16 FLA, 1 hp (0.75 kW), 60 Hz; 2.5 million cycles at FLA (10 million at 50% of FLA)
3. Circuit breakers	120 V, 10 A, OFF/ON switch. Single pole 120 V
4. Toggle Switch	Single-pole, double-throw HOA switch, 20 A
5. Audio alarm	95 dB at 24 in. (600 mm), warble-tone sound, UL Type 4X
6. Visual alarm	7/8-in. (22-mm) diameter red lens, "Push-to-silence", 120 V LED, UL Type 4X

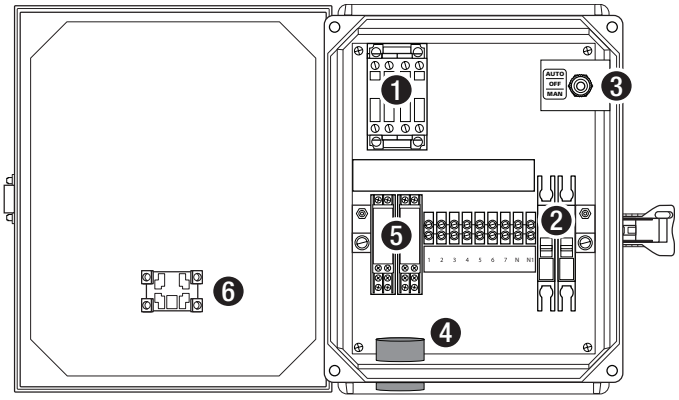

Control panel, demand-dose

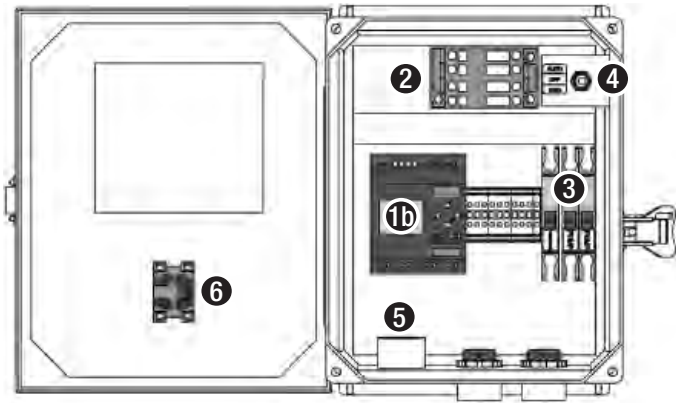

Control panel, timed-dose (digital timer model shown)

Orenco Systems® Inc. , 814 Airway Ave., Sutherlin, OR 97479 USA • 800-348-9843 • 541-459-4449 • www.orenco.com

Orenco® *Technical Data Sheet*

PF Series 4-inch (100-mm) Submersible Effluent Pumps

Applications

Our 4-inch (100-mm) Submersible Effluent Pumps are designed to transport screened effluent (with low TSS counts) from septic tanks or separate dosing tanks. All our pumps are constructed of lightweight, corrosion-resistant stainless steel and engineered plastics; all are field-serviceable and repairable with common tools; and all 60-Hz PF Series models are CSA certified to the U.S. and Canadian safety standards for effluent pumps, meeting UL requirements.

Orenco's Effluent Pumps are used in a variety of applications, including pressurized drainfields, packed bed filters, mounds, aerobic units, effluent irrigation, effluent sewers, wetlands, lagoons, and more. These pumps are designed to be used with a Biotube® pump vault or after a secondary treatment system.

Powered by **Franklin Electric**

C US
LR80980
LR2053896

Features/Specifications

To specify this pump for your installation, require the following:

- Minimum 24-hour run-dry capability with no deterioration in pump life or performance*
- Patented 1⁄8-inch (3-mm) bypass orifice to ensure flow recirculation for motor cooling and to prevent air bind
- Liquid end repair kits available for better long-term cost of ownership
- TRI-SEAL™ floating impeller design on 10, 15, 20, and 30 gpm (0.6, 1.0, 1.3, and 1.9 L/sec) models; floating stack design on 50 and 75 gpm (3.2 and 4.7 L/sec) models
- Franklin Electric Super Stainless motor, rated for continuous use and frequent cycling
- Type SOOW 600-V motor cable
- Five-year warranty on pump or retrofit liquid end from date of manufacture against defects in materials or workmanship

** Not applicable for 5-hp (3.73 kW) models*

Standard Models

See specifications chart, pages 2-3, for a list of standard pumps. For a complete list of available pumps, call Orenco.

Product Code Diagram

PF ☐ ☐ ☐ ☐ - ☐

Cord length, ft (m):‡
Blank = 10 (3) 20 = 20 (6)
30 = 30 (9) 50 = 50 (15)

Voltage, nameplate:
1 = 115* 200 = 200
2 = 230† 4 = 460

Frequency:
1 = single-phase 60 Hz
3 = three-phase 60 Hz
5 = single-phase 50 Hz

Horsepower (kW):
03 = ⅓ hp (0.25) 05 = ½ hp (0.37)
07 = ¾ hp (0.56) 10 = 1 hp (0.75)
15 = 1-½ hp (1.11) 20 = 2 hp (1.50)
30 = 3 hp (2.24) 50 = 5 hp (3.73)

Nominal flow, gpm (L/sec):
10 = 10 (0.6) 15 = 15 (1.0)
20 = 20 (1.3) 30 = 30 (1.9)
50 = 50 (3.2) 75 = 75 (4.7)

Pump, PF Series

* ½-hp (0.37kW) only
†220 volts for 50 Hz pumps
‡Note: 20-foot cords are available only for single-phase pumps through 1-½ hp

Specifications, 60 Hz

Pump Model	Design gpm (L/sec)	Horsepower (kW)	Phase	Nameplate voltage	Actual voltage	Design flow amps	Max amps	Impellers	Discharge size and material [1]	Length, in. (mm)	Min. liquid level, [2] in. (mm)	Weight, [3] lb (kg)	Rated cycles/day
PF100511	10 (0.6)	0.50 (0.37)	1	115	120	12.7	12.7	6	1 ¼ in. GFP	23.0 (660)	16 (406)	26 (12)	300
PF100512	10 (0.6)	0.50 (0.37)	1	230	240	6.3	6.3	6	1 ¼ in. GFP	23.0 (660)	16 (406)	26 (12)	300
PF10053200	10 (0.6)	0.50 (0.37)	3	200	208	3.8	3.8	6	1 ¼ in. GFP	23.0 (660)	16 (406)	26 (12)	300
PF100712 [4, 5]	10 (0.6)	0.75 (0.56)	1	230	240	8.3	8.3	8	1 ¼ in. GFP	25.9 (658)	17 (432)	30 (14)	300
PF10073200 [4, 5]	10 (0.6)	0.75 (0.56)	3	200	208	5.1	5.2	8	1 ¼ in. GFP	25.4 (645)	17 (432)	31 (14)	300
PF101012 [5, 6]	10 (0.6)	1.00 (0.75)	1	230	240	9.6	9.6	9	1 ¼ in. GFP	27.9 (709)	18 (457)	33 (15)	100
PF10103200 [5, 6]	10 (0.6)	1.00 (0.75)	3	200	208	5.5	5.5	9	1 ¼ in. GFP	27.3 (693)	18 (457)	37 (17)	300
PF102012 [5, 6, 7, 8]	10 (0.6)	2.00 (1.49)	1	230	240	12.1	12.1	18	1 ¼ in. SS	39.5 (1003)	22 (559)	48 (22)	100
PF102032 [5, 6, 8]	10 (0.6)	2.00 (1.49)	3	230	240	7.5	7.6	18	1 ¼ in. SS	37.9 (963)	20 (508)	44 (20)	300
PF10203200 [5, 6, 8]	10 (0.6)	2.00 (1.49)	3	200	208	8.7	8.7	18	1 ¼ in. SS	37.9 (963)	20 (508)	44 (20)	300
PF150311	15 (1.0)	0.33 (0.25)	1	115	120	8.7	8.8	3	1 ¼ in. GFP	19.5 (495)	15 (380)	23 (10)	300
PF150312	15 (1.0)	0.33 (0.25)	1	230	240	4.4	4.5	3	1 ¼ in. GFP	19.5 (495)	15 (380)	23 (10)	300
PF200511	20 (1.3)	0.50 (0.37)	1	115	120	12.3	12.5	4	1 ¼ in. GFP	22.3 (566)	18 (457)	25 (11)	300
PF200512	20 (1.3)	0.50 (0.37)	1	230	240	6.4	6.5	4	1 ¼ in. GFP	22.5 (572)	18 (457)	26 (12)	300
PF20053200	20 (1.3)	0.50 (0.37)	3	200	208	3.7	3.8	4	1 ¼ in. GFP	22.3 (566)	18 (457)	26 (12)	300
PF201012 [4, 5]	20 (1.3)	1.00 (0.75)	1	230	240	10.5	10.5	7	1 ¼ in. GFP	28.4 (721)	20 (508)	33 (15)	100
PF20103200 [4, 5]	20 (1.3)	1.00 (0.75)	3	200	208	5.8	5.9	7	1 ¼ in. GFP	27.8 (706)	20 (508)	33 (15)	300
PF201512 [4, 5]	20 (1.3)	1.50 (1.11)	1	230	240	12.4	12.6	9	1 ¼ in. GFP	34.0 (864)	24 (610)	41 (19)	100
PF20153200 [4, 5]	20 (1.3)	1.50 (1.11)	3	200	208	7.1	7.2	9	1 ¼ in. GFP	30.7 (780)	20 (508)	35 (16)	300
PF300511	30 (1.9)	0.50 (0.37)	1	115	120	11.8	11.8	3	1 ¼ in. GFP	21.3 (541)	20 (508)	28 (13)	300
PF300512	30 (1.9)	0.50 (0.37)	1	230	240	6.2	6.2	3	1 ¼ in. GFP	21.3 (541)	20 (508)	25 (11)	300
PF30053200	30 (1.9)	0.50 (0.37)	3	200	208	3.6	3.6	3	1 ¼ in. GFP	21.3 (541)	20 (508)	25 (11)	300
PF300712	30 (1.9)	0.75 (0.56)	1	230	240	8.5	8.5	5	1 ¼ in. GFP	24.8 (630)	21 (533)	29 (13)	300
PF30073200	30 (1.9)	0.75 (0.56)	3	200	208	4.9	4.9	5	1 ¼ in. GFP	24.6 (625)	21 (533)	30 (14)	300
PF301012 [4]	30 (1.9)	1.00 (0.75)	1	230	240	10.4	10.4	6	1 ¼ in. GFP	27.0 (686)	22 (559)	32 (15)	100
PF30103200 [4]	30 (1.9)	1.00 (0.75)	3	200	208	5.8	5.8	6	1 ¼ in. GFP	26.4 (671)	22 (559)	33 (15)	300
PF301512 [4, 5]	30 (1.9)	1.50 (1.11)	1	230	240	12.6	12.6	8	1 ¼ in. GFP	32.8 (833)	24 (610)	40 (18)	100
PF30153200 [4, 5]	30 (1.9)	1.50 (1.11)	3	200	208	6.9	6.9	8	1 ¼ in. GFP	29.8 (757)	22 (559)	34 (15)	300
PF301534 [4, 5]	30 (1.9)	1.50 (1.11)	3	460	480	2.8	2.8	8	1 ¼ in. GFP	29.5 (685)	22 (559)	34 (15)	300
PF302012 [5, 6, 7]	30 (1.9)	2.00 (1.49)	1	230	240	11.0	11.0	10	1 ¼ in. SS	35.5 (902)	26 (660)	44 (20)	100
PF30203200 [5, 6]	30 (1.9)	2.00 (1.49)	3	200	208	9.3	9.3	10	1 ¼ in. SS	34.0 (864)	24 (610)	41 (19)	300
PF303012 [5, 6, 7, 8]	30 (1.9)	3.00 (2.23)	1	230	240	16.8	16.8	14	1 ¼ in. SS	44.5 (1130)	33 (838)	54 (24)	100
PF303032 [5, 6, 8]	30 (1.9)	3.00 (2.23)	3	230	240	10.0	10.1	14	1 ¼ in. SS	44.3 (1125)	27 (686)	52 (24)	300
PF305012 [5, 6, 7, 8]	30 (1.9)	5.00 (3.73)	1	230	240	25.6	25.8	23	1 ¼ in. SS	66.5 (1689)	53 (1346)	82 (37)	100
PF305032 [5, 6, 8]	30 (1.9)	5.00 (3.73)	3	230	240	16.6	16.6	23	1 ¼ in. SS	60.8 (1544)	48 (1219)	66 (30)	300
PF30503200 [5, 6, 8]	30 (1.9)	5.00 (3.73)	3	200	208	18.7	18.7	23	1 ¼ in. SS	60.8 (1544)	48 (1219)	66 (30)	300
PF500511	50 (3.2)	0.50 (0.37)	1	115	120	12.1	12.1	2	2 in. SS	20.3 (516)	24 (610)	27 (12)	300
PF500512	50 (3.2)	0.50 (0.37)	1	230	240	6.2	6.2	2	2 in. SS	20.3 (516)	24 (610)	27 (12)	300
PF500532	50 (3.2)	0.50 (0.37)	3	230	240	3.0	3.0	2	2 in. SS	20.3 (516)	24 (610)	28 (13)	300
PF50053200	50 (3.2)	0.50 (0.37)	3	200	208	3.7	3.7	2	2 in. SS	20.3 (516)	24 (610)	28 (13)	300
PF500534	50 (3.2)	0.50 (0.37)	3	460	480	1.5	1.5	2	2 in. SS	20.3 (516)	24 (610)	28 (13)	300
PF500712	50 (3.2)	0.75 (0.56)	1	230	240	8.5	8.5	3	2 in. SS	23.7 (602)	25 (635)	31 (14)	300
PF500732	50 (3.2)	0.75 (0.56)	3	230	240	3.9	3.9	3	2 in. SS	23.7 (602)	25 (635)	32 (15)	300
PF50073200	50 (3.2)	0.75 (0.56)	3	200	208	4.9	4.9	3	2 in. SS	23.1 (587)	26 (660)	32 (15)	300

Orenco Systems® Inc. , 814 Airway Ave., Sutherlin, OR 97479 USA • 800-348-9843 • 541-459-4449 • www.orenco.com

Specifications, 60 Hz (continued)

Pump Model	Design gpm (L/sec)	Horsepower (kW)	Phase	Nameplate voltage	Actual voltage	Design flow amps	Max amps	Impellers	Discharge size and material [1]	Length, in. (mm)	Min. liquid level, [2] in. (mm)	Weight, [3] lb (kg)	Rated cycles/day
PF500734	50 (3.2)	0.75 (0.56)	3	460	480	1.8	1.8	3	2 in. SS	34.8 (884)	25 (635)	31 (14)	300
PF501012	50 (3.2)	1.00 (0.75)	1	230	240	10.1	10.1	4	2 in. SS	27.0 (686)	26 (660)	35 (16)	100
PF50103200	50 (3.2)	1.00 (0.75)	3	200	208	5.7	5.7	4	2 in. SS	26.4 (671)	26 (660)	39 (18)	300
PF501034	50 (3.2)	1.00 (0.75)	3	460	480	2.2	2.2	4	2 in. SS	26.4 (671)	26 (660)	39 (18)	300
PF5015124	50 (3.2)	1.50 (1.11)	1	230	240	12.5	12.6	5	2 in. SS	32.5 (826)	30 (762)	41 (19)	100
PF501532004	50 (3.2)	1.50 (1.11)	3	200	208	7.0	7.0	5	2 in. SS	29.3 (744)	26 (660)	35 (16)	300
PF503012 [4, 5, 7, 8]	50 (3.2)	3.00 (2.23)	1	230	240	17.7	17.7	8	2 in. SS	43.0 (1092)	37 (940)	55 (25)	100
PF50303200 [4, 5, 8]	50 (3.2)	3.00 (2.23)	3	200	208	13.1	13.1	8	2 in. SS	43.4 (1102)	30 (762)	55 (25)	300
PF503034 [4, 5, 8]	50 (3.2)	3.00 (2.23)	3	460	480	5.3	5.3	8	2 in. SS	40.0 (1016)	31 (787)	55 (25)	300
PF505012 [5,6,7,8]	50 (3.2)	5.00 (3.73)	1	230	240	26.2	26.4	13	2 in. SS	65.4 (1661)	55 (1397)	64 (29)	300
PF505032 [5,6,7,8]	50 (3.2)	5.00 (3.73)	3	230	240	16.5	16.5	13	2 in. SS	59.3 (1506)	49 (1245)	64 (29)	300
PF751012	75 (4.7)	1.00 (0.75)	1	230	240	9.9	10.0	3	2 in. SS	27.0 (686)	27 (686)	34 (15)	100
PF751512	75 (4.7)	1.50 (1.11)	1	230	240	12.1	12.3	4	2 in. SS	33.4 (848)	30 (762)	44 (20)	100

Specifications, 50 Hz

Pump Model													
PF100552	10 (0.6)	0.50 (0.37)	1	220	230	3.9	4.1	6	1 ¼ in. GFP	23.0 (584)	17 (432)	26 (12)	300
PF100752 [4, 5]	10 (0.6)	0.75 (0.56)	1	220	230	6.2	6.2	9	1 ¼ in. GFP	26.8 (658)	17 (432)	30 (14)	300
PF101552 [5, 6]	10 (0.6)	1.50 (1.11)	1	220	230	10.5	11.4	18	1 ¼ in. SS	39.5 (1003)	22 (559)	46 (21)	300
PF300552	30 (1.9)	0.50 (0.37)	1	220	230	4.1	4.1	4	1 ¼ in. GFP	22.5 (572)	19 (483)	26 (12)	300
PF300752	30 (1.9)	0.75 (0.56)	1	220	230	6.1	6.1	5	1 ¼ in. GFP	24.8 (630)	19 (483)	29 (13)	300
PF301052	30 (1.9)	1.00 (0.75)	1	220	230	7.4	7.4	7	1 ¼ in. GFP	28.4 (721)	20 (508)	32 (15)	100
PF301552 [4, 5]	30 (1.9)	1.50 (1.11)	1	220	230	9.3	9.3	8	1 ¼ in. GFP	35.4 (899)	24 (610)	40 (18)	100
PF500552	50 (3.2)	0.50 (0.37)	1	220	230	4.0	4.0	2	2 in. SS	20.3 (516)	25 (635)	29 (13)	300
PF500752	50 (3.2)	0.75 (0.56)	1	220	230	6.3	6.4	3	2 in. SS	23.7 (602)	25 (635)	31 (14)	300
PF501052	50 (3.2)	1.00 (0.75)	1	220	230	7.3	7.4	4	2 in. SS	27.0 (686)	26 (660)	35 (16)	100
PF501552	50 (3.2)	1.50 (1.11)	1	220	230	9.1	9.1	5	2 in. SS	32.5 (826)	30 (762)	42 (19)	100
PF751052	75 (3.2)	1.00 (0.75)	1	220	230	7.3	7.3	4	2 in. SS	30.0 (762)	27 (686)	34 (15)	100

1 *GFP = glass-filled polypropylene; SS = stainless steel. The 1 ¼-in. NPT GFP discharge is 2 7/8 in. octagonal across flats; the 1 ¼-in. NPT SS discharge is 2 1/8 in. octagonal across flats; and the 2-in. NPT SS discharge is 2 7/8 in. hexagonal across flats. Discharge is female NPT threaded, U.S. nominal size, to accommodate Orenco® discharge hose and valve assemblies. Consult your Orenco Distributor about fittings to connect hose and valve assemblies to metric-sized piping.*

2 *Minimum liquid level is for single pumps when installed in an Orenco Biotube® Pump Vault or Universal Flow Inducer. In other applications, minimum liquid level should be top of pump. Consult Orenco for more information.*

3 *Weight includes carton and 10-ft (3-m) cord.*

4 *High-pressure discharge assembly required.*

5 *Do not use cam-lock option (Q) on discharge assembly.*

6 *Custom discharge assembly required for these pumps. Contact Orenco.*

7 *Capacitor pack (sold separately or installed in a custom control panel) required for this pump. Contact Orenco.*

8 *Torque locks are available for all pumps, and are supplied with 3-hp and 5-hp pumps.*

Materials of Construction

Discharge	Glass-filled polypropylene or stainless steel
Discharge bearing	Engineered thermoplastic (PEEK)
Diffusers	Glass-filled PPO (Noryl GFN3)
Impellers	Celcon® acetal copolymer on 10-, 20, and 30-gpm models; 50-gpm impellers are Noryl GFN3
Intake screen	Polypropylene
Suction connection	Stainless steel
Drive shaft	7/16 inch hexagonal stainless steel, 300 series
Coupling	Sintered stainless steel, 300 series
Shell	Stainless steel, 300 series
Motor	Franklin motor exterior constructed of stainless steel. Motor filled with deionized water and propylene glycol for constant lubrication. Hermetically sealed motor housing ensures moisture-free windings. All thrust absorbed by Kingsbury-type thrust bearing. Rated for continuous duty. Single-phase motors and 200 and 230 V 3-phase motors equipped with surge arrestors for added security. Single-phase motors through 1.5 hp (1.11 kW) have built-in thermal overload protection, which trips at 203-221˚ F (95-105˚ C).

Using a Pump Curve

A *pump curve* helps you determine the best pump for your system. Pump curves show the relationship between flow (gpm or L/sec) and pressure (total dynamic head, or TDH), providing a graphical representation of a pump's optimal performance range. Pumps perform best at their nominal flow rate — the value, measured in gpm, expressed by the first two numerals in an Orenco pump nomenclature. The graphs in this section show optimal pump operation ranges with a solid line. Flow flow rates outside of these ranges are shown with a dashed line. For the most accurate pump specification, use Orenco's PumpSelect™ software.

Pump Curves, 60 Hz Models

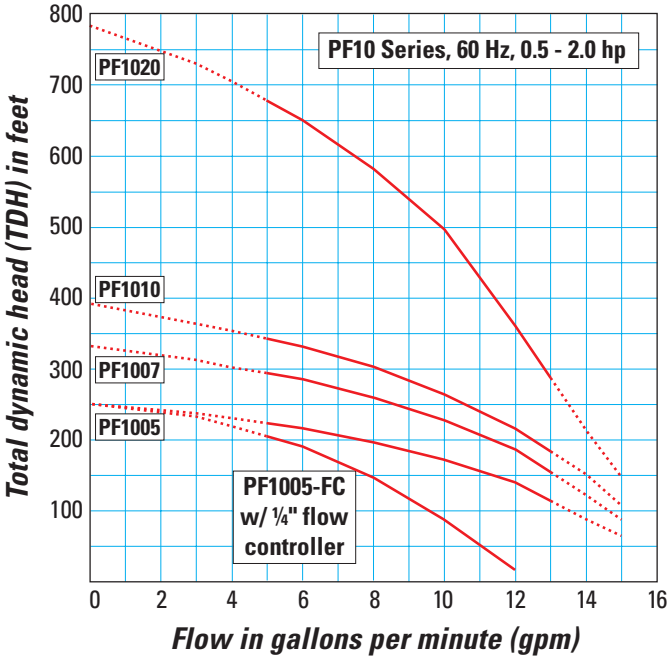

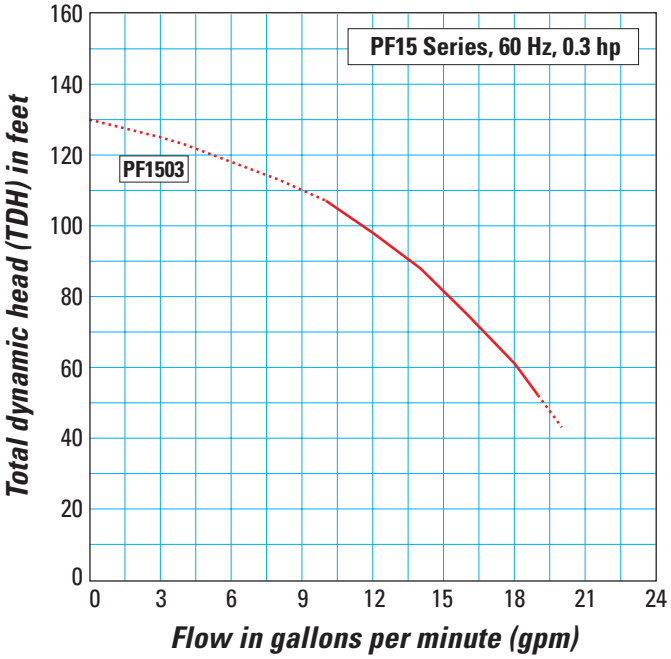

Orenco Systems® Inc. , 814 Airway Ave., Sutherlin, OR 97479 USA • 800-348-9843 • 541-459-4449 • www.orenco.com

60 Hz Models (continued)

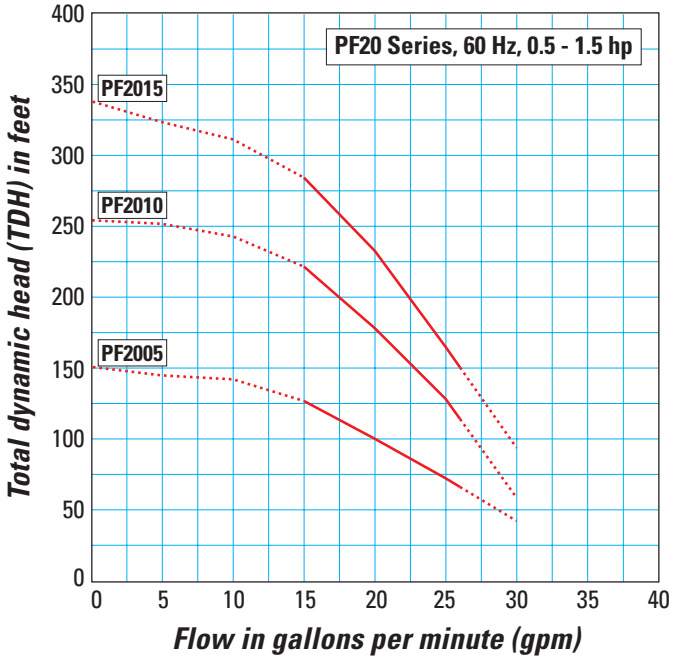

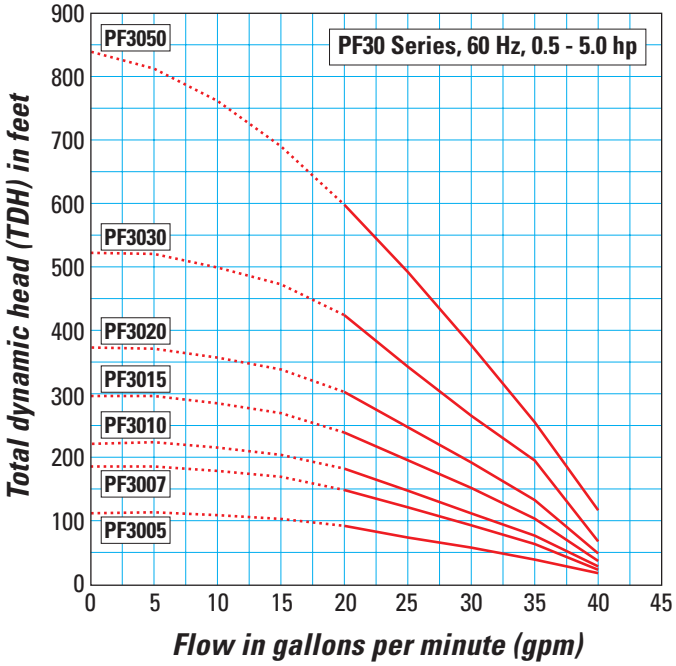

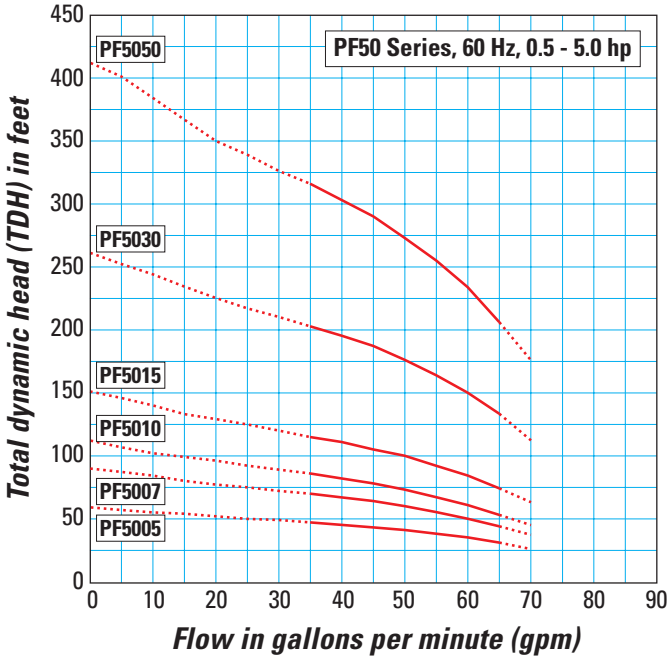

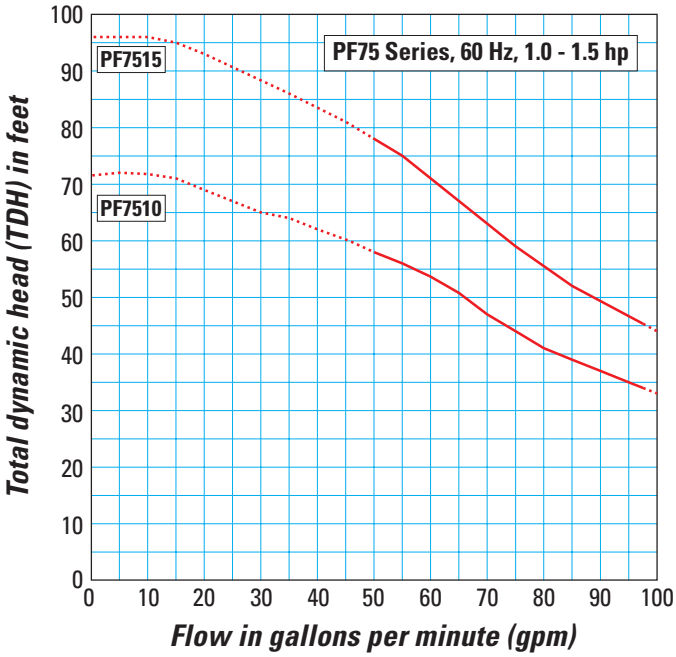

Pump Curves, 50 Hz Models

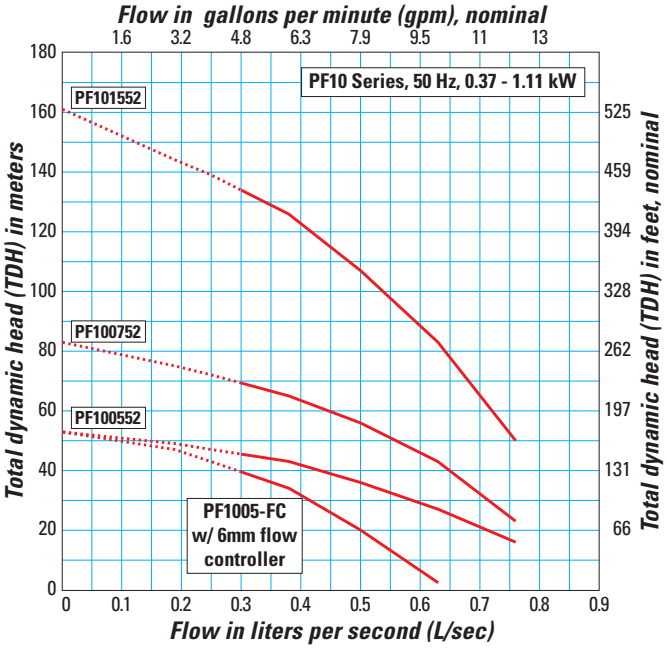

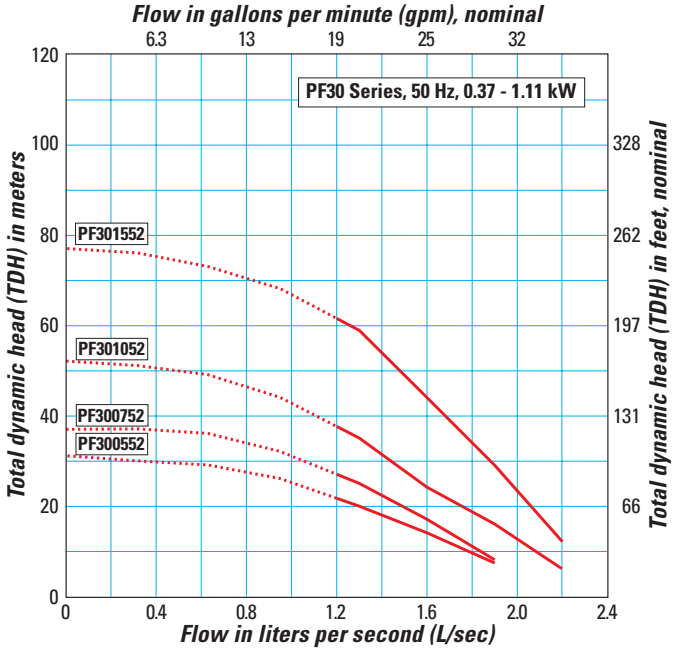

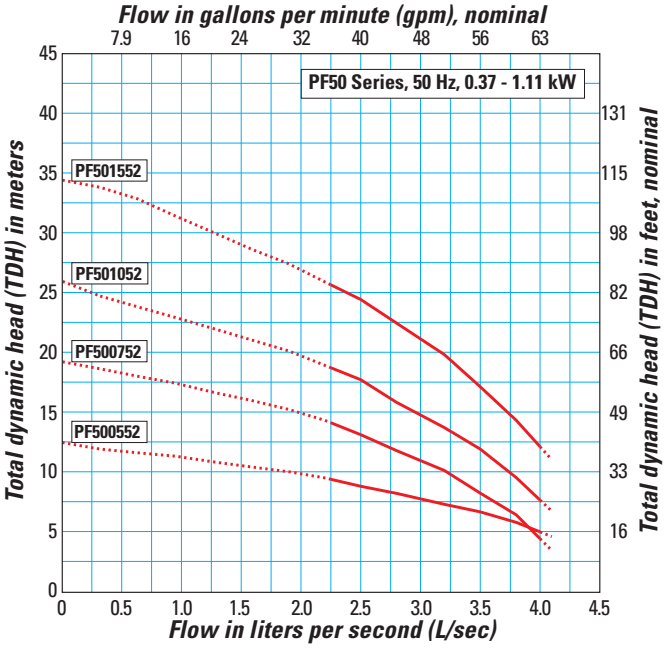

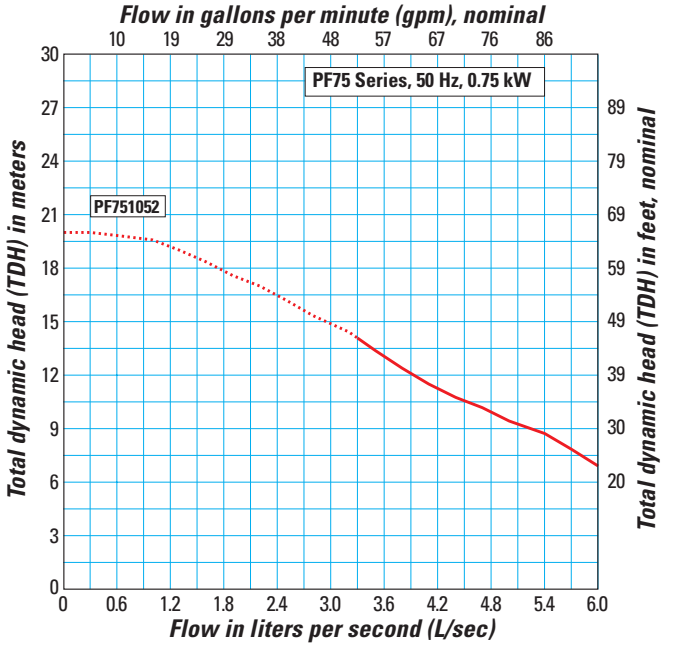

Orenco Systems® Inc. , 814 Airway Ave., Sutherlin, OR 97479 USA • 800-348-9843 • 541-459-4449 • www.orenco.com

Panel Installation

Orenco Systems®
Incorporated

814 AIRWAY AVENUE

SUTHERLIN, OREGON

97479-9012

TELEPHONE:

(541) 459-4449

FACSIMILE:

(541) 459-2884

Before Installing Panel

1. *Read all instructions before proceeding with the installation. Improper installation may void warranties.*

2. Inspect your order for completeness and inspect each component for shipment damage. If something is missing or damaged, you will need to contact your supplier to obtain replacements.

3. Check to be sure the instructions and items supplied comply with state and local regulations.

4. A qualified electrician must be employed to install and service the panel and ancillary wiring. The equipment must be installed in compliance with the National Electric Code, as well as state and local codes.

Placement of the Control Panel

5. Install the electrical control or alarm panel within view of the tank. The panel should be attached to a post or an exterior wall. Panels that contain motor contactors make a thumping sound, each time a pump is started or stopped. Therefore, these panels should not be mounted to an exterior wall unless it is in a location away from living areas, such as on a garage wall. If possible, position the panel in the shade to protect it from weather. Extreme temperatures can cause inconsistent performance of the electrical components. Locate the panel at a convenient height (usually about five feet above the ground) and where it will be accessible for maintenance.

Install Floats and Pumps

6. Install the electrical splice box(es) for the floats and pump(s) before installing the actual floats and pumping equipment. The splice box(es) are installed in the grommet(s) provided near the top of the riser.

7. Install the floats. Thread the float and pump cords through the cord grips into the PVC splice box, leaving adequate lengths of electrical cord coiled inside the riser to allow easy removal of the pump and float assembly. Do not remove the colored markers or the paper tags from the float cords, and do not try to thread the markers and tag through the cord grip. These should be left on the float cord, outside the splice box. Tighten the cord grips, using hand pressure or a wrench if necessary, until the cord will no longer move in the cord grip. If the cord grips are not tight enough, the seal will not be watertight, but overtightening may damage the cord or the cord grip, so use only as much force as necessary. Adequate lengths of cord should be left within the splice box to allow for easy removal for future disconnecting and re-splicing.

8. Run the wires from the control panel to the splice box. The wires can be brought through a conduit, or can be buried using suitable direct-burial wire. Conduit that enters the splice box must be sealed, even if the wires are direct-buried, to prevent the infiltration of water into the splice box. Use an electrically approved sealant to plug the wires coming in through the conduit hub. The number of wires required depends on the control panel and the number of floats and pumps used. This can be determined by consulting the Float Arrangement diagram appropriate for the control panel and float arrangement being used.

Wire should be sized at 14 AWG for the floats. Refer to Figure 1 to determine the proper size for the pump wires. When calculating wire size, the length and size of the branch circuit wires from the service entrance panel to the pump control panel must also be taken into account. Wire that's too small can cause an excessive voltage drop and poor pump performance.

Wires should be color coded or otherwise marked to aid in wiring the control panel. Drawing EIN-SB-SB-1 lists recommended colors for each of the wires. Colors may refer to either the color of the wire's insulation, the color of a tag, or the color of an electrical tape marker.

9. All splices made in the splice box should use waterproof wire nuts or butt connectors and heat shrink tubing. The splices must be waterproof! Splices that are not waterproof may cause a malfunction of the pump controls if water should leak into the splice box. Refer to Drawing EIN-SB-SB-1 for instructions on making waterproof splices. Refer to the appropriate Float Arrangement diagram for instructions on how to connect the floats together.

Connect Control Panel

10. Connect the wires coming from floats to the terminals in the control panel. Refer to the appropriate Float Arrangement diagram for the correct terminal connections.

11. Connect the wires coming from the pump(s) to the pump terminals. Refer to the panel wiring diagram for the correct terminal connections.

12. Connect the incoming power to the panel. Power to the panel must be appropriate to the control panel and pump motor (i.e. 120VAC, single phase for a 120 VAC motor, 240 VAC single phase for a 240 VAC motor, etc.) Insure that the panel is properly grounded and that the fuse or breaker and wire size, from the main power panel and to the pump, are sized correctly. Separate circuits for the pump controls and each of the pump motors is recommended. Note: Voltage for the controls in the panel is always 120VAC, although the pump voltage may be 120VAC or 240 VAC.

13. Use 60° minimum CU conductors only. Torque the terminal blocks to 15 LB-IN and the ground lugs to 45 LB-IN. Torque the circuit breakers to 20 LB-IN for 14-10 AWG wire, 25 LB-IN for 8 AWG wire, and 27 LB-IN for 6-4 AWG wire.

14. When power is applied to the control panel, the wires to the pump may be energized. Do not service the pump or any electrical wiring in the pump vault without disconnecting the power at the circuit breaker and the fuse. The pump vault area is a hazardous area, and may contain explosive gases. Take appropriate precautions before working in the pump vault.

15. If you have any questions please contact Orenco Systems, Inc.

Figure 1. Recommended Breaker & Wire Size

Pump Motor Size		Breaker size	Wire Size	Max Distance*
120 VAC	1/2 hp	20 amp	10 AWG	105 ft
240 VAC	1/2 hp	15 amp	14 AWG	161 ft
	3/4 hp	20 amp	14 AWG	130 ft
	1 hp	20 amp	12 AWG	172 ft
	1 1/2 hp	20 amp	12 AWG	126 ft

* This is the maximum distance from this subpanel to the pump motor for the recommended wire size. Distance is based on 3% maximum voltage drop from subpanel to load at maximum recognized pump motor amps at 75° C.

Panel Wiring Diagram
Model DAX1 RO

Orenco Systems®
Incorporated

814 AIRWAY AVENUE
SUTHERLIN, OREGON
97479-9012

TELEPHONE:
(541) 459-4449

FACSIMILE:
(541) 459-2884

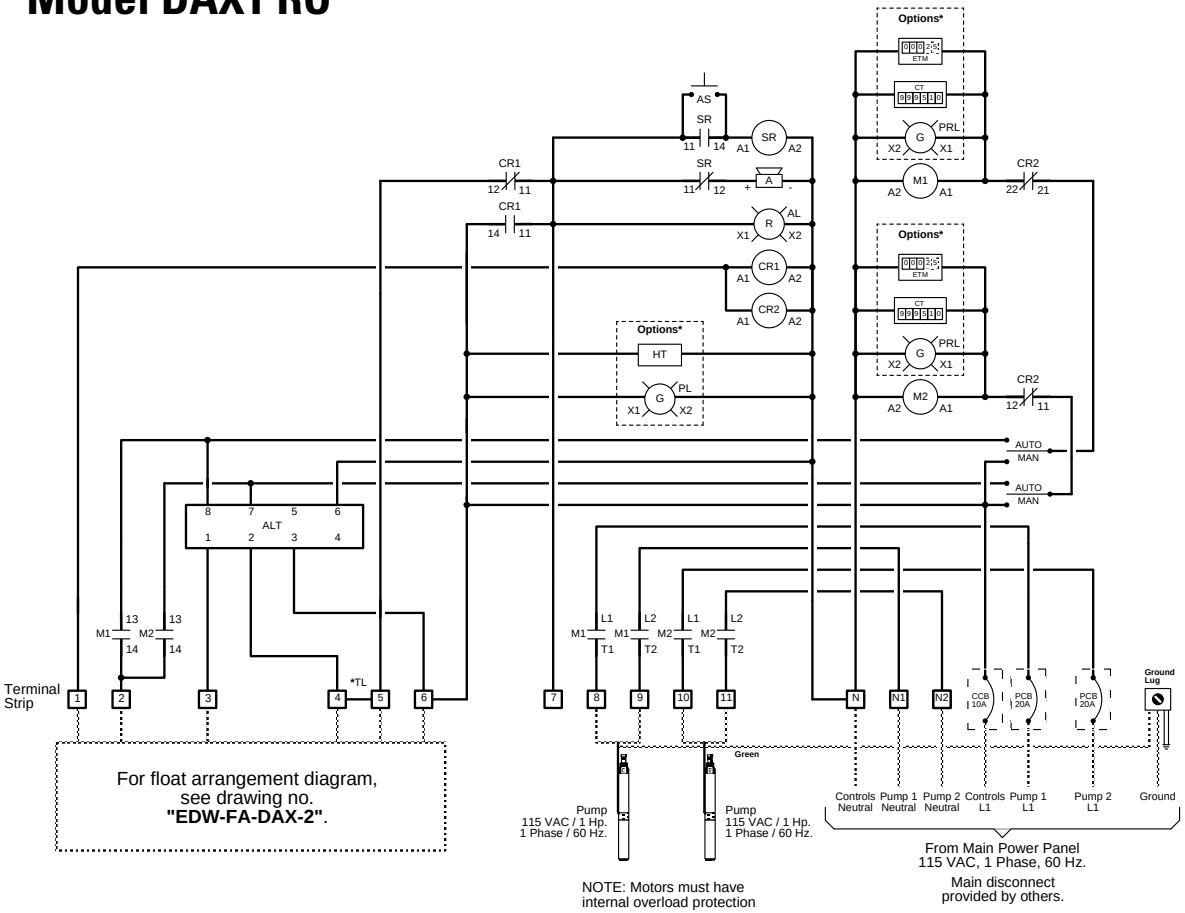

For float arrangement diagram, see drawing no. **"EDW-FA-DAX-2"**.

Duplex Operation

High Level Alarm: This float activates the alarm light and audible alarm when lifted. The audible alarm may be silenced by pressing the illuminated PUSH TO SILENCE button on the front of the control panel. The alarm light will remain on until the float is lowered.

Lag Pump On: This float turns on the lag pump when lifted. The pump will continue to run until the Pumps Off float is lowered.

Lead Pump On: This float turns on the lead pump when lifted. The pump will continue to run until the Pumps Off float is lowered.

Pumps Off: This float turns off the pumps when lowered.

Redundant Off & Low Level Alarm: This float turns off the pump(s) when lowered. This float is a secondary off float which will operate if the Pumps Off float fails. Pumping will be disabled in both the automatic and manual modes. This float also activates the alarm light and audible alarm. The audible alarm may be silenced by pressing the illuminated PUSH TO SILENCE button on the front of the control panel. The alarm light will remain on until the float is lifted.

Remote Alarm Connections

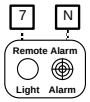

Orenco Model AHW or equiv.

Note: 115VAC signal is present during alarm conditions.

*Removal of Alarm / Lag Link Rail

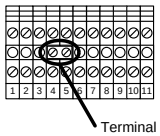

Removal of the terminal link rail will separate the high level alarm and Lag Pump On functions.

Power Wiring Options

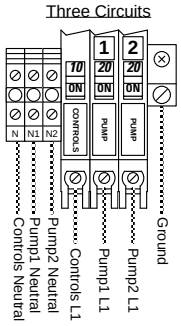

Factory default. Wire as shown.

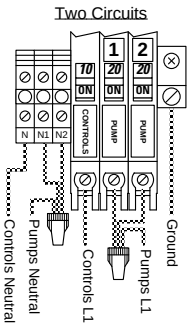

Use one wire nut to connect the pole of each pump circuit breaker together with the incoming L1 power line. Use another wire nut to connect the neutral block of each pump with the incoming neutral line.

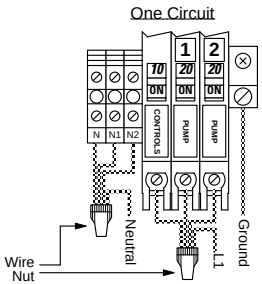

Use one wire nut to connect the pole of each pump circuit breaker together with the controls breaker and with the incoming L1 power line. Use another wire nut to connect the neutral block of each pump with the controls neutral block and with the incoming neutral line.

Key

- —— = Factory Wire
- ~~~ = Field Wire
- - - = Alternate Field Wire
- A = Audio Alarm, 115 VAC
- AL = Alarm Light
- ALT = Duplex Alternator
- AS = Audio Silence Switch
- CCB = Controls Circuit Breaker
- CR1 = Low Level Alarm Relay
- CR2 = Redundant Off Relay
- M = Motor Contactor
- PCB = Pump Circuit Breaker
- SR = Silence Control Relay
- TL = Terminal Link

***Options**

- CT = Cycle Counter
- ETM = Elapsed Time Meter
- HT = Heater
- PL = Power Light
- PRL = Pump Run Light

Float Arrangement Diagram

Orenco Systems®
Incorporated

814 AIRWAY AVENUE
SUTHERLIN, OREGON
97479-9012

TELEPHONE:
(541) 459-4449

FACSIMILE:
(541) 459-2884

Check the appropriate box for the float function (color code) used in your system.

☐ (YP)BRW • *Factory Standard* •

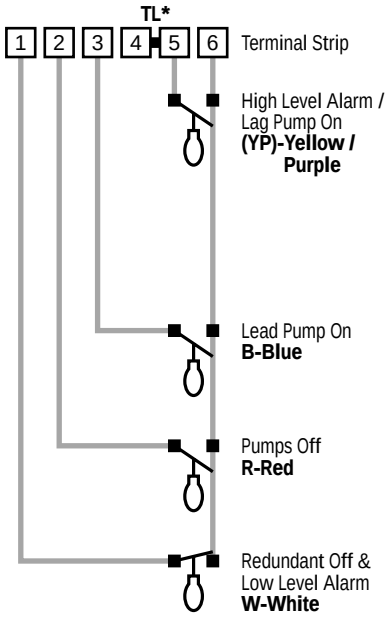

***Terminal Link Rail is required (factory installed).**

For a wire splicing illustration of the above diagram, request one of the following Splice Box Wiring Diagrams:
EDW-SB-DAX-30 (no pump cords)
EDW-SB-DAX-31 (one pump cord)
EDW-SB-DAX-32 (two pump cords)

☐ YPBRW

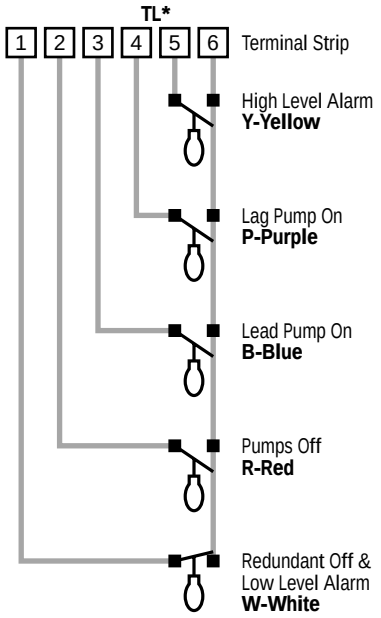

***Remove pre-installed Terminal Link Rail from terminals. See Panel Wiring Diagram for instructions.**

For a wire splicing illustration of the above diagram, request one of the following Splice Box Wiring Diagrams:
EDW-SB-DAX-28 (no pump cords)
EDW-SB-DAX-29 (one pump cord)

Float Types

Typical OSI float model: A
Specs: contact - normally open
differential - no minimum
power rating - signal
Possible substitutions: B,C,D

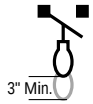

Typical OSI float model: B
Specs: contact - normally open
differential - 3" min.
power rating - signal
Possible substitutions: C,D

Typical OSI float model: T
Specs: contact - normally closed
differential - no minimum
power rating - signal

Control Panel Series

DAX RO

Drawing No.

EDW-FA-DAX-2

EDW-FA-DAX-2
Rev 2.1 ©12/17/98

Splice Box Wiring Diagram

Orenco Systems®
Incorporated

814 AIRWAY AVENUE
SUTHERLIN, OREGON
97479-9012

TELEPHONE:
(541) 459-4449

FACSIMILE:
(541) 459-2884

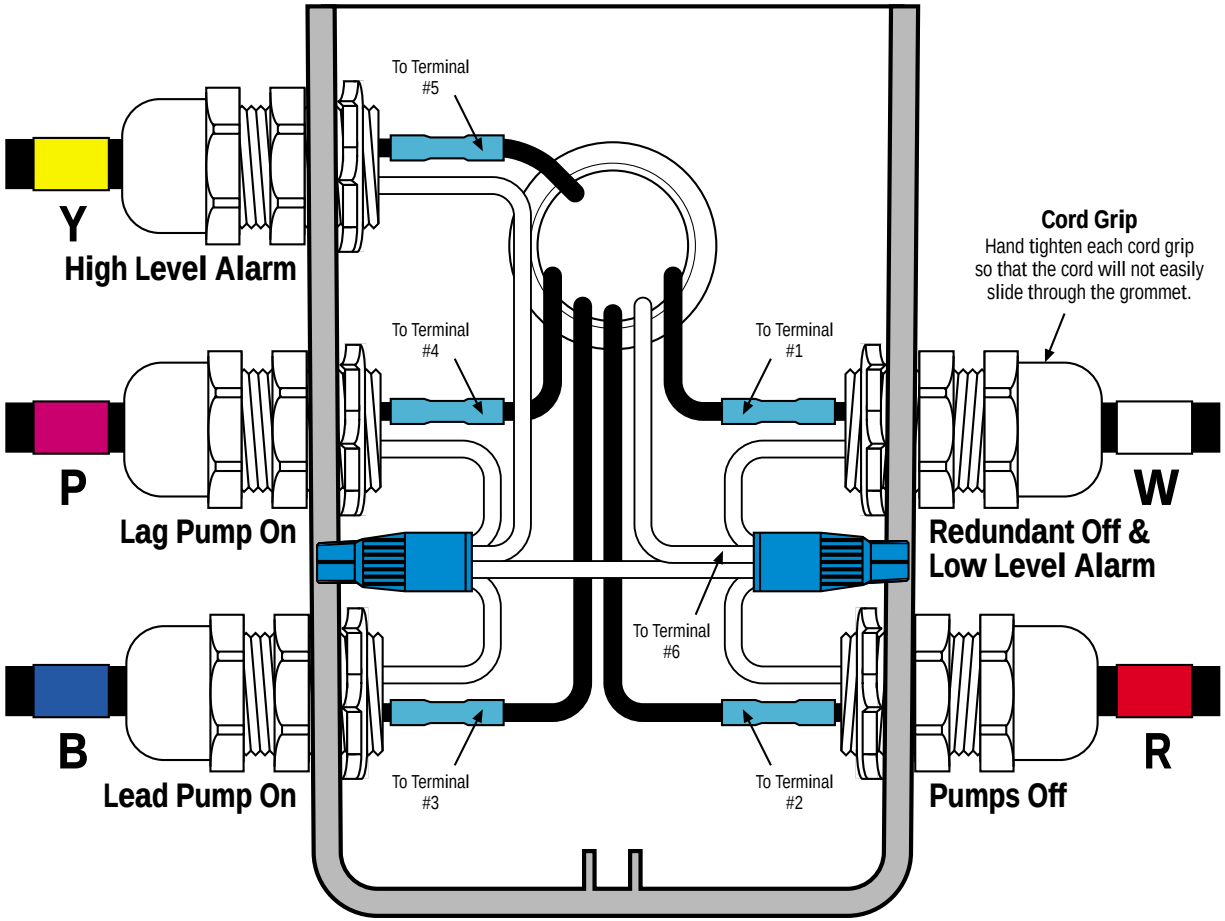

Key

- Black Wire
- White Wire
- Green Wire
- Waterproof Wire Nut
- Heat Shrink & Butt Connector *

* Refer to drawing EIN-SB-SB-1 for splicing instructions.

Float Tag Colors

- **Y** - Yellow
- **P** - Purple
- **B** - Blue
- **G** - Green
- **R** - Red
- **O** - Orange
- **E** - Grey
- **W** - White

Note: Multi-function floats will have more than one marker

Attention: Failure to follow splicing instructions will void warranty

Control Panel Series	Float Function Color Code	Splice Box Model	Drawing No.
DAX RO	YPBRW	SB5	EDW-SB-DAX-28

EDW-SB-DAX-28
Rev 1.2 ©05/01/98

Splice Box Wiring Diagram

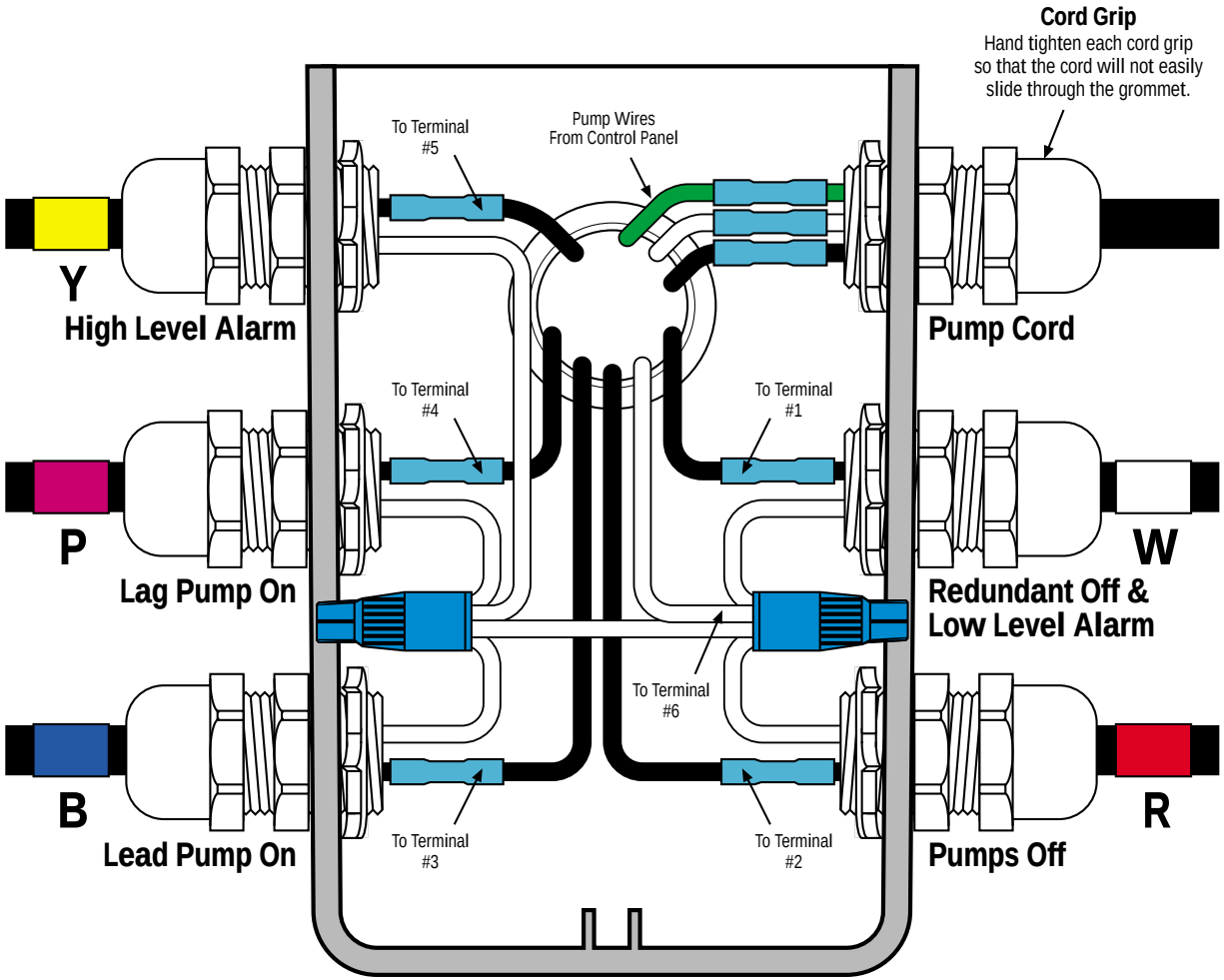

Key

- Black Wire
- White Wire
- Green Wire
- Waterproof Wire Nut
- Heat Shrink & Butt Connector *

* Refer to drawing EIN-SB-SB-1 for splicing instructions.

Float Tag Colors

- **Y** - Yellow
- **P** - Purple
- **B** - Blue
- **G** - Green
- **R** - Red
- **O** - Orange
- **E** - Grey
- **W** - White

Note: Multi-function floats will have more than one marker

Attention: Failure to follow splicing instructions will void warranty

Orenco Systems®
Incorporated

814 AIRWAY AVENUE
SUTHERLIN, OREGON
97479-9012

TELEPHONE:
(541) 459-4449

FACSIMILE:
(541) 459-2884

Control Panel Series	Float Function Color Code	Splice Box Model	Drawing No.
DAX RO	YPBRW	SB6	EDW-SB-DAX-29

EDW-SB-DAX-29
Rev 1.2 ©05/01/98

Splice Box Wiring Diagram

Orenco Systems®
Incorporated

814 AIRWAY AVENUE
SUTHERLIN, OREGON
97479-9012

TELEPHONE:
(541) 459-4449

FACSIMILE:
(541) 459-2884

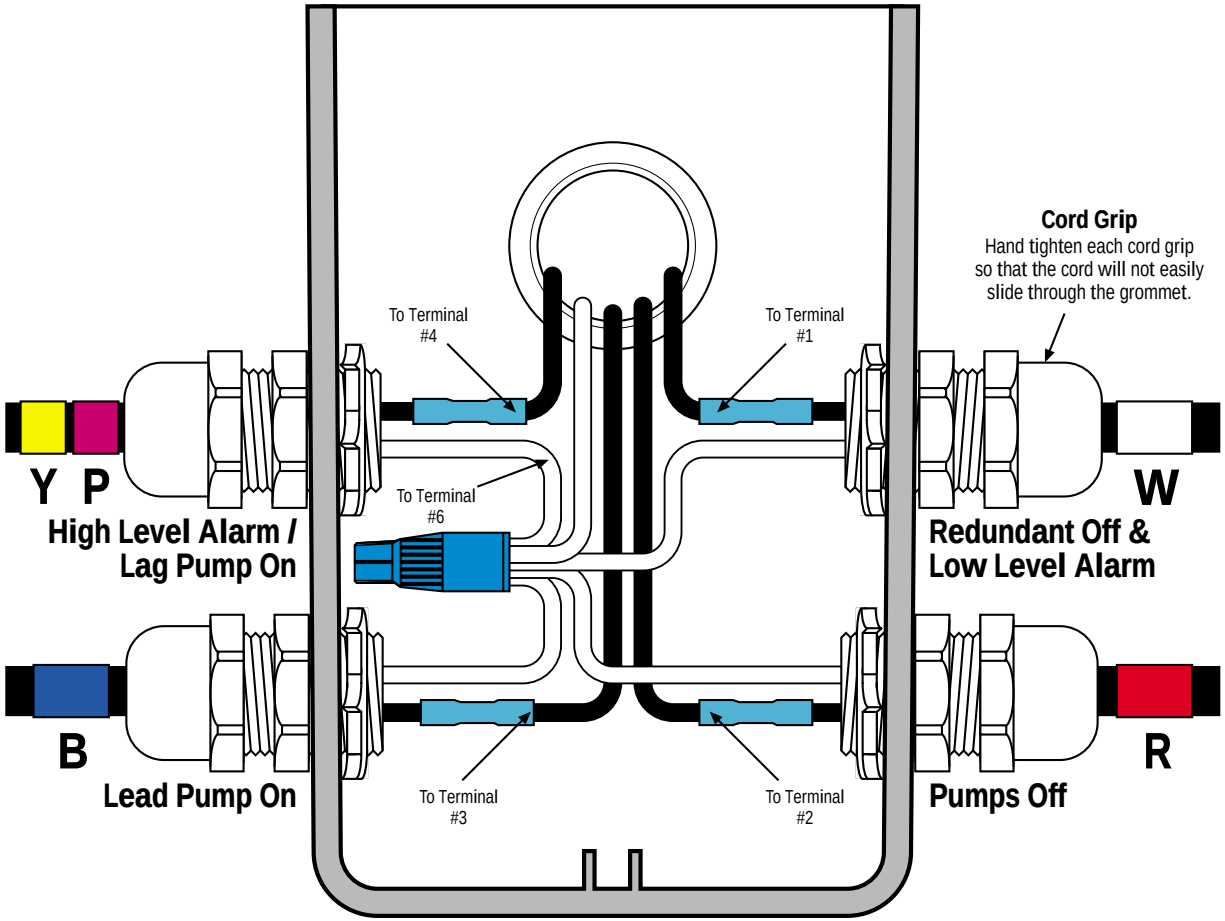

Key

- Black Wire
- White Wire
- Green Wire
- Waterproof Wire Nut
- Heat Shrink & Butt Connector *

* Refer to drawing EIN-SB-SB-1 for splicing instructions.

Float Tag Colors

- **Y** - Yellow
- **P** - Purple
- **B** - Blue
- **G** - Green
- **R** - Red
- **O** - Orange
- **E** - Grey
- **W** - White

Note: Multi-function floats will have more than one marker

Attention: Failure to follow splicing instructions will void warranty

Control Panel Series	Float Function Color Code	Splice Box Model	Drawing No.
DAX RO	(YP)BRW	SB4	EDW-SB-DAX-30

EDW-SB-DAX-30
Rev 1.2 ©04/29/98

Splice Box Wiring Diagram

Orenco Systems®
Incorporated

814 AIRWAY AVENUE
SUTHERLIN, OREGON
97479-9012

TELEPHONE:
(541) 459-4449

FACSIMILE:
(541) 459-2884

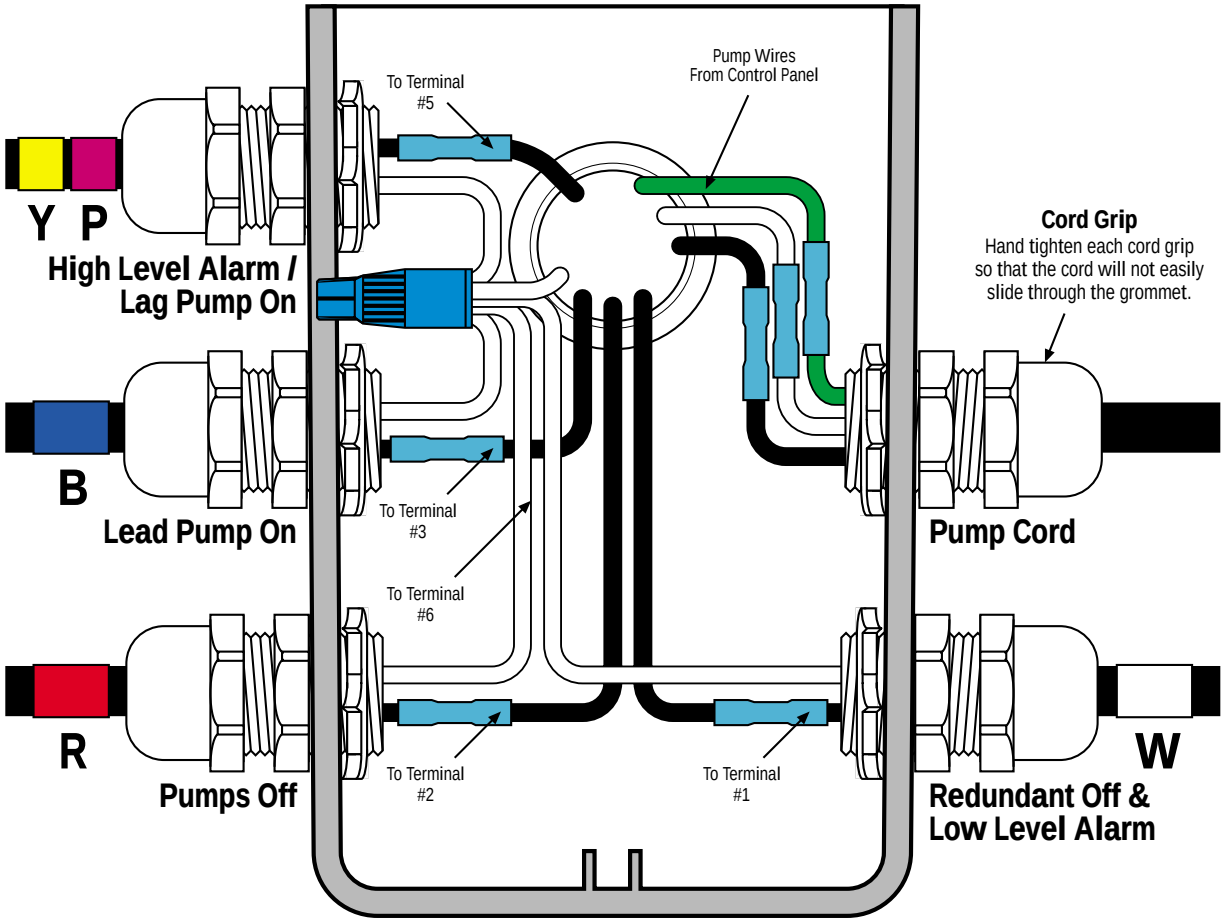

Key

- Black Wire
- White Wire
- Green Wire
- Waterproof Wire Nut
- Heat Shrink & Butt Connector *

* Refer to drawing EIN-SB-SB-1 for splicing instructions.

Float Tag Colors

- **Y** - Yellow
- **P** - Purple
- **B** - Blue
- **G** - Green
- **R** - Red
- **O** - Orange
- **E** - Grey
- **W** - White

Note: Multi-function floats will have more than one marker

Attention: Failure to follow splicing instructions will void warranty

Control Panel Series	Float Function Color Code	Splice Box Model	Drawing No.
DAX RO	(YP)BRW	SB5	EDW-SB-DAX-31

EDW-SB-DAX-31
Rev 1.2 ©04/29/98

Splice Box Wiring Diagram

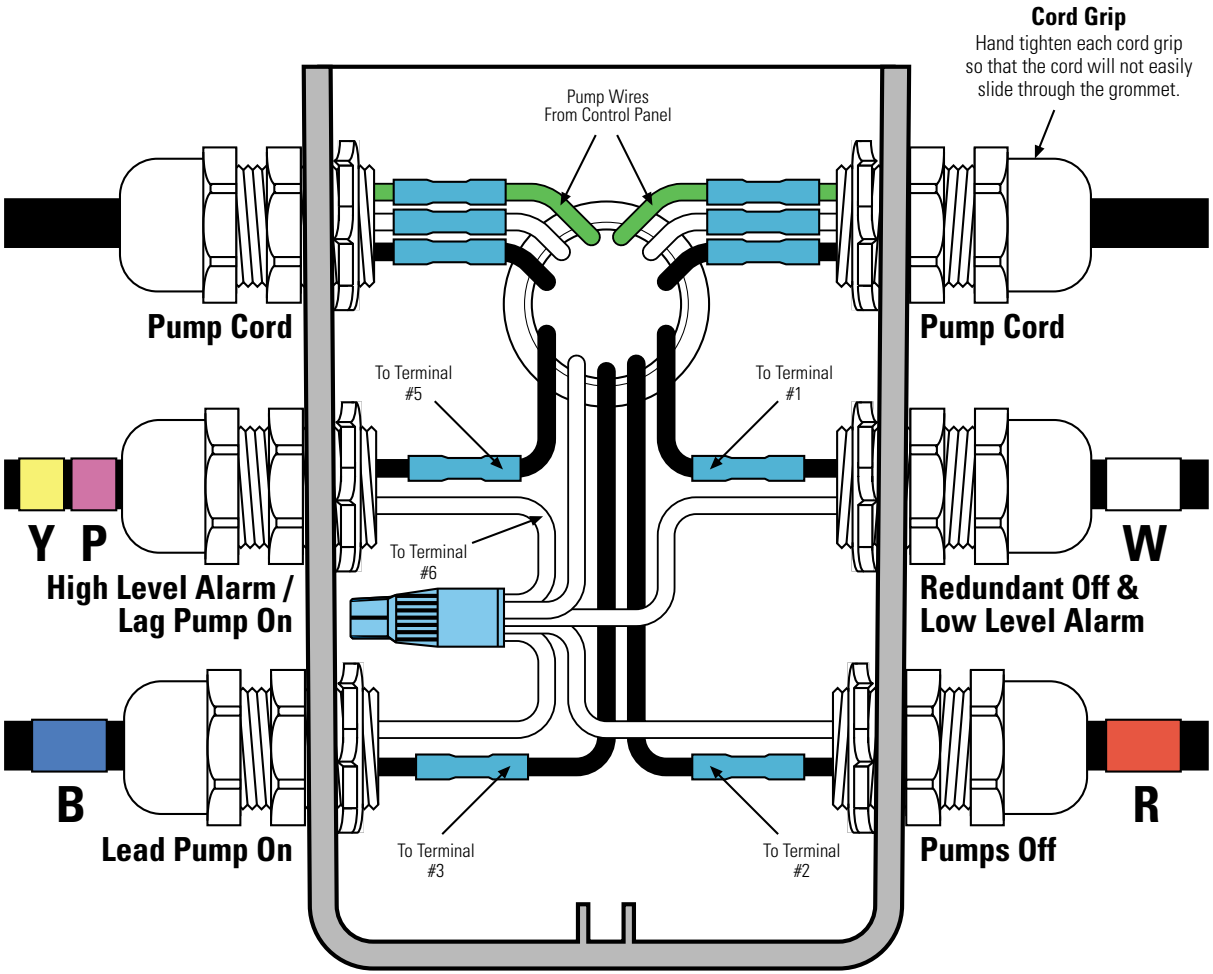

Key

- Black Wire
- White Wire
- Green Wire
- Waterproof Wire Nut
- Heat Shrink & Butt Connector *

* Refer to drawing EIN-SB-SB-1 for splicing instructions.

Float Tag Colors

Y - Yellow
P - Purple
B - Blue
G - Green
R - Red
O - Orange
E - Grey
W - White

Note: Multi-function floats will have more than one marker

Attention: Failure to follow splicing instructions will void warranty

Orenco Systems®
Incorporated

814 AIRWAY AVENUE
SUTHERLIN, OREGON
97479-9012

TELEPHONE:
(541) 459-4449

FACSIMILE:
(541) 459-2884

Control Panel Series	Float Function Color Code	Splice Box Model	Drawing No.
DAX RO	(YP)BRW	SB6	EDW-SB-DAX-32

EDW-SB-DAX-32
Rev 1.3 ©03/15/02

Duplex Control Panels

Submittal
Data Sheet

Orenco Systems®
Incorporated
1-800-348-9843

Applications

Duplex control panels can be used in systems that require two motors operating in alternation, as in pumping operations. The panel can run both motors simultaneously when demand is high.

General

Standard features include circuit breakers, an automatic/manual/off toggle switch, and an audible/visual alarm with auto reset. Other standard and optional features are listed on page 2. Any input sensor with contacts can be used. Listed per UL 508; a UL Canada listing is available.

Standard Models

DAX1, DAX2

Nomenclature

DAX□ □□□

Indicates selected options (see page 2)

Indicates voltage
1 = 120 VAC
2 = 240 VAC

Specifications

Feature	Specification(s)
Panel Enclosure:	Measures 15.5” high x 13.3” wide x 6.7” deep. NEMA 4X rated. Constructed of UV resistant fiberglass; hinge and latch are stainless steel.
DAX1 Panel Ratings:	120 VAC, 3/4 hp, 14 amps, single phase, 60 Hz.
DAX2 Panel Ratings:	240 VAC, 2 hp, 14 amps, single phase, 60 Hz.

Duplex Control Panels (continued)

Standard Features

Feature	Specification(s)
Motor-Start Contactor	120 VAC: 16 FLA, 1 hp, 60 hz; 2.5 million cycles at FLA (10 million at 50% of FLA). 240 VAC: 16 FLA, 3 hp, 60 hz; 2.5 million cycles at FLA (10 million at 50% FLA).
Pump Circuit Breakers	20 amps, OFF/ON switch. Single pole 120 VAC, double pole 240 VAC. DIN rail mounting with thermal magnetic tripping characteristics.
Controls Circuit Breaker	10 amps, OFF/ON switch. Single pole 120V. DIN rail mounting with thermal magnetic tripping characteristics.
Toggle Switches	Single pole-double throw HOA switch rated at 20 amps.
Audible Alarm	95 dB at 24”, warble-tone sound.
Audible Alarm Silence Relay	120 VAC, automatic reset. DIN rail mount.
Visible Alarm	7/8" diameter red lens, “Push-to-silence.” NEMA 4X, 1-watt LED, 120 VAC.
Duplex Alternator	120 VAC, cross wired style for independent lag pump function. Selector switch for locking one pump into lead position.

Optional Features

Feature	Specification(s)	Product Code Adder
Intrinsically Safe Control Relays	120 VAC. Listed per UL 698A, for Class 1 Div. 1, groups A, B, C, D hazardous locations. Larger enclosure required.	IR
Programmable Timer	120 VAC, Repeat cycle from 0.05 seconds to 30 hours. Separate variable controls for OFF & ON time periods.	PT
Redundant Off Relay	120 VAC, provides a secondary off. Sounds alarm on low level condition. DIN rail mount.	RO
Heater	Anti-condensation heater. Self-adjusting: radiates additional wattage as temperature drops.	HT
Elapsed Time Meter	120 VAC, 7-digit, non-resettable. Limit of 99,999 hours; accurate to 0.01 hours.	ETM
Event Counter	120 VAC, 6-digit, non-resettable.	CT
Pump Run Light	7/8" green lens. NEMA 4X, 1-watt LED, 120 VAC.	PRL

This article may describe design criteria that was in effect at the time the article was written. FOR CURRENT DESIGN CRITERIA, call Orenco Systems, Inc. at 1-800-348-9843.

Orenco Automatic Distributing Valve Assemblies

Orenco Systems®
Incorporated
1-800-348-9843

For Wastewater Effluent Systems

Introduction

Orenco's automatic distributing valve assemblies, pressurized with small high-head effluent pumps, are useful for distributing effluent to multiple zones. These zones can be segments of sand filter manifolds, drainfields, or other effluent distribution systems. Distributing valve assemblies can substantially simplify the design and installation of a distribution system and reduce installation costs. This is particularly true where a distributing valve assembly is used instead of multiple pumps and/or electrically operated valves. Additionally, a reduction in long term operation and maintenance costs is realized due to a reduced size and/or number of pumps. More even distribution can be achieved on sloping sites by zoning laterals at equal elevations. This eliminates drainback to lower lines and the unequal distribution of effluent that occurs at the beginning of a cycle.

Valve Operation

The valve itself has only a few moving parts, requires no electricity, and alternates automatically each cycle. Refer to Figure 1 for the following valve operation description. The flow of the incoming effluent forces the rubber flap disk ❶ to seat against the valve bottom ❷. The opening ❸ in the rubber flap disk aligns with an opening in the valve bottom to allow flow to only one valve outlet. The stem ❹ houses a stainless steel spring which pushes the rubber flap disk away from the valve bottom after the flow of effluent stops. The stem acts as a cam follower and rotates the rubber flap disk as the stem is raised and lowered through the cam ❺. The force from the flow of effluent pushes the stem down through the cam and the stainless steel spring pushes the stem back up through the cam when the flow of effluent stops. Each linear motion of the stem allows the rubber flap disk to rotate half the distance necessary to reach the next outlet. When there is no flow, the rubber flap disk is in the "up" position and is not seated against the valve bottom.

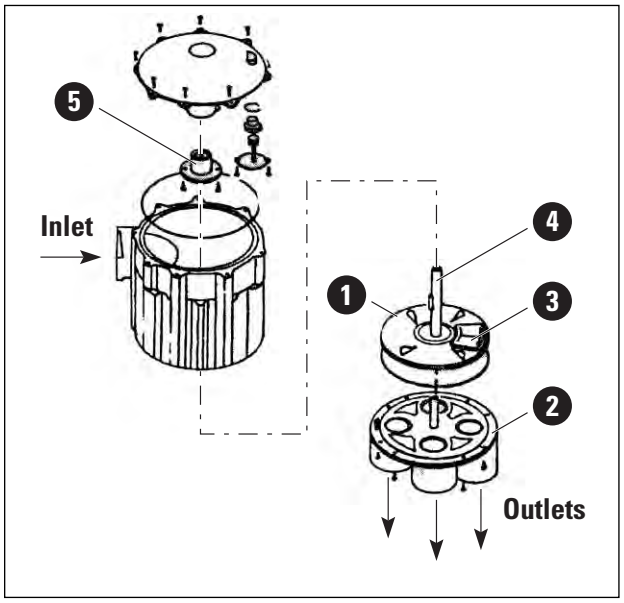

Figure 1:
6000 Series Valve

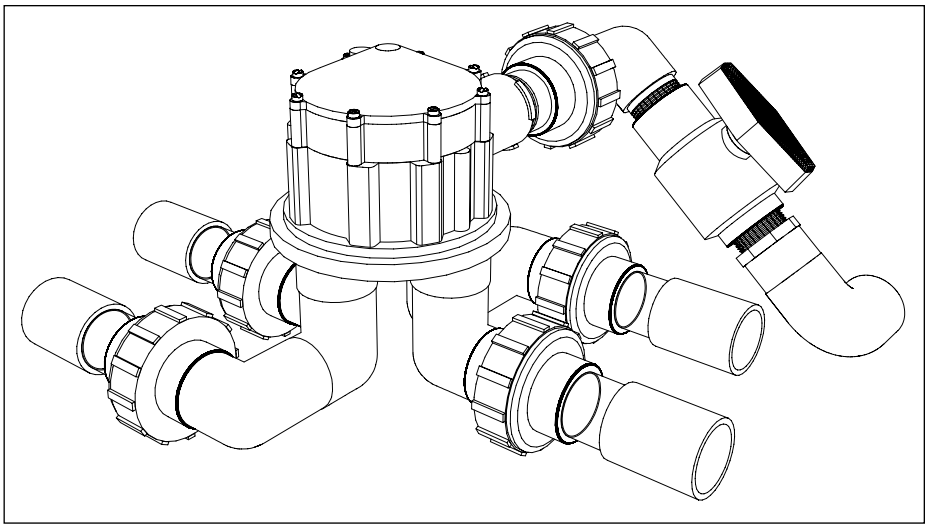

Figure 2:
Orenco Distributing Valve Assembly (6000 Series Valve)

The Distributing Valve Assembly

The Orenco Automatic Distributing Valve Assembly combines the distributing valve itself and several other components to give a complete preassembled unit that is easy to install, monitor, and maintain. Figure 2 shows a complete assembly. Because distributing valves with several outlets can be difficult to line up and glue together in the field, the discharge lines in the assemblies are glued in place at Orenco. The unions (1) allow removal and maintenance of the valve. The clear PVC pipe sections (2) give a visual check of which discharge line is being pressurized. The inlet ball valve (3) allows a quick, simple method to test for proper valve cycling. The ball valve also stops the flow of effluent in case the pump is activated unexpectedly during maintenance or inspection. Check valves may be necessary on the discharge lines. Use of check valves is discussed in the valve positioning section.

Valve Assembly Hydraulics

Liquid flowing through the valve assembly must pass through fairly small openings and make several changes in direction. Because of this, headlosses through the valve assembly are fairly high. Table 1 gives the headloss equations for several different assemblies and Figure 3 shows the graphical representations of these equations. Orenco recommends that high-head turbine pumps be used to pressurize the valve assemblies to ensure enough head is available for proper system operation. High-head turbine pumps are also recommended because the use of a distributing valve usually requires more frequent pump cycling. The high-head turbine pumps are designed for high cycling systems and will outlast conventional effluent pumps by a factor of 10 or more in a high cycling mode. Furthermore, the high-head turbine pump intake is 12 inches or more above the bottom of the pump and tends to prevent any settled solids from being pumped into the distribution valve and obstructing its operation. A minimum flow rate through the distributing valve is required to ensure proper seating of the rubber flap disk. Minimum flow rates for the various models are given in Table 1.

Table 1. Automatic Distributing Valve Assembly Headloss Equations

Model Series	Equation	Operating Range (gpm)
V4400A	$H_L = 0.085 \times Q^{1.45}$	10 - 40
V4600A	$H_L = 0.085 \times Q^{1.58}$	10 - 25
V6400A	$H_L = 0.0045 \times Q^2 + 3.5 \times (1 - e^{-0.06Q})$	15 - 70
V6600A	$H_L = 0.0049 \times Q^2 + 5.5 \times (1 - e^{-0.1Q})$	15 - 70

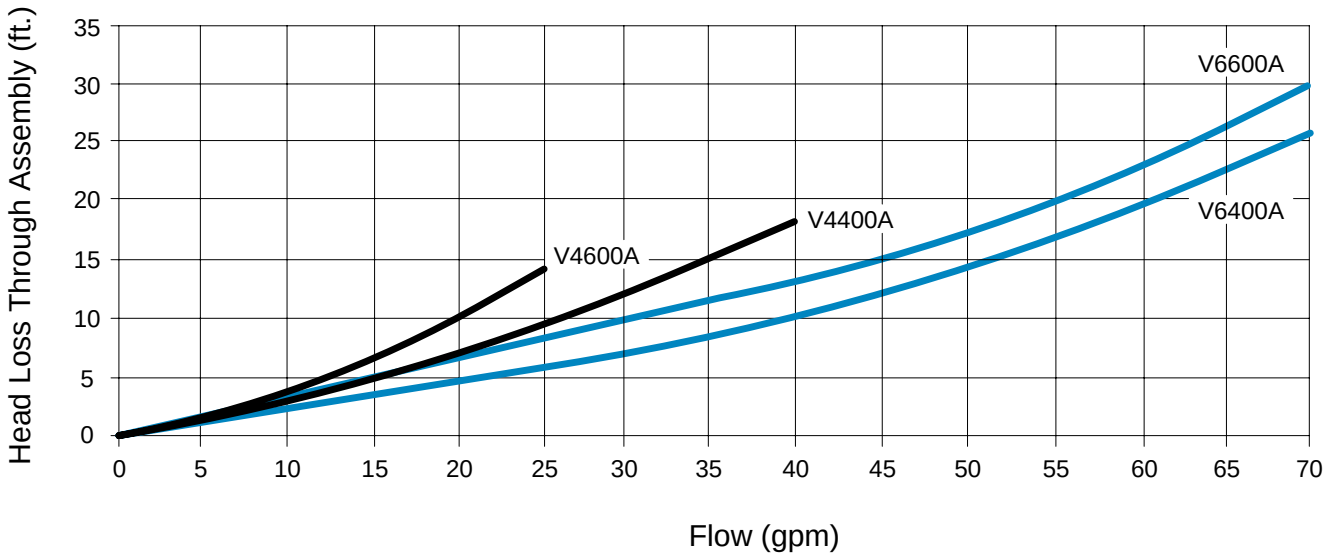

Figure 3:
Automatic distributing valve assembly headloss curves

The Pumping System

Although the distributing valve was designed for the irrigation industry, it has started to gain fairly wide acceptance in the effluent pumping industry. However, because of the mechanical movements of the valve, it is necessary to take steps to prevent solids from reaching the distributing valve that may impede the operation of the valve. Orenco Biotube® Pump Vaults — when properly sized and installed — provide the necessary protection to prevent valve malfunction. The Biotube® pump vault accepts effluent only from the clear zone between a tank's scum and sludge layers and then filters this effluent through a very large surface area screen cartridge. Without this protection in effluent systems, the valve has very little chance of reliable long-term operation.

Valve Positioning

The physical position of the valve in relation to the pump and the discharge point is very important for proper valve operation. The most reliable operation occurs when the valve is placed at the high point in the system and as close to the pump as possible. The transport line between the pump and valve should be kept full if possible. If the line is empty at the beginning of each cycle, pockets of air during filling can cause random rotation of the valve. The valve is particularly vulnerable to this erratic rotation with empty lines that are long and not laid at a constant grade. An ideal valve location is shown in Figure 4.

If the final discharge point is more than about 2 feet above the valve and the system does not drain back into the dosing tank, check valves should be installed on the lines immediately following the valve and a pressure release hole or line should be installed just prior to the valve. This pressure release hole or line can go into a return line to the dosing tank or to a “minidrainfield” near the valve. In order for the valve to rotate reliably, no more than about 2 feet of head should remain against the valve to allow the rubber flap disk to return to its up position. In many cases, it may take from one minute to several minutes for the pressure in the valve to be lowered enough for proper rotation to occur. Special care should be taken when installing systems controlled by programmable timers to ensure cycling does not occur too rapidly. Figure 5 illustrates a valve assembly using check valves. Pumping downhill to the valve should be avoided unless the transport line is very short and the elevation between the discharge line out of the tank and the valve is less than about 2 feet. If the valve is located many feet below the dosing tank, random cycling may occur while the transport line drains through the valve at the end of the cycle. A pressure sustaining valve located just before the distributing valve may overcome this problem in some instances.

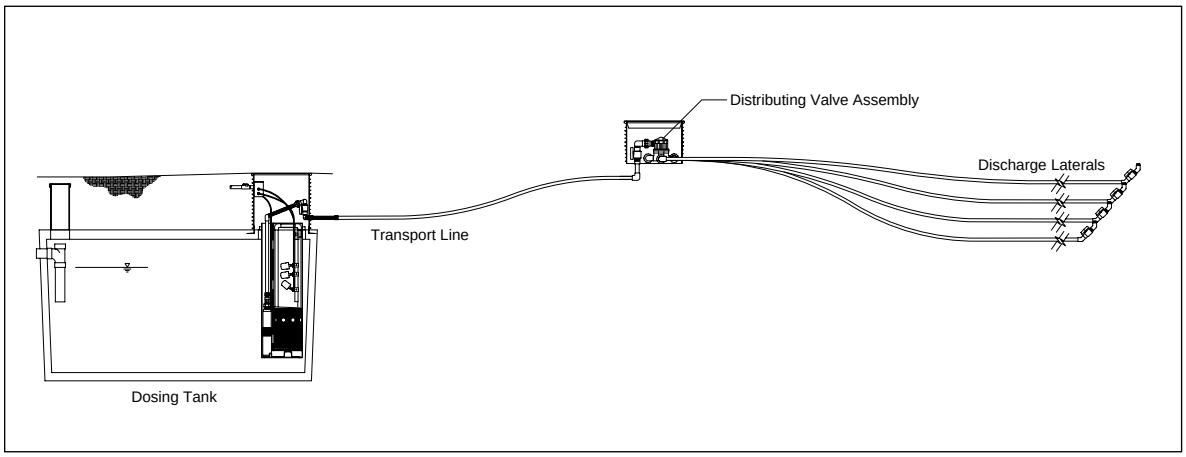

Figure 4:
Ideal valve location

System Startup

Refer to the Hydrotek Valve booklet that is provided with the distributing valve assembly for the sequencing of the valve outlets. The transport line should always be flushed with clean water before installing the valve. Any sand, gravel, or other foreign objects that may have been in the pipe during installation can easily become lodged in the distributing valve, causing malfunction.

With the pump running, alternately close and open the ball valve on the distributing valve assembly to check proper rotation of the valve. (Note: If check valves are used on the lines after the distributing valve, the pump may need to be turned on and off to allow the pressure to be released from the valve.) If visual operation of which zone is operating is not possible, watch the clear pipe on each line for indication of which zone is operating.

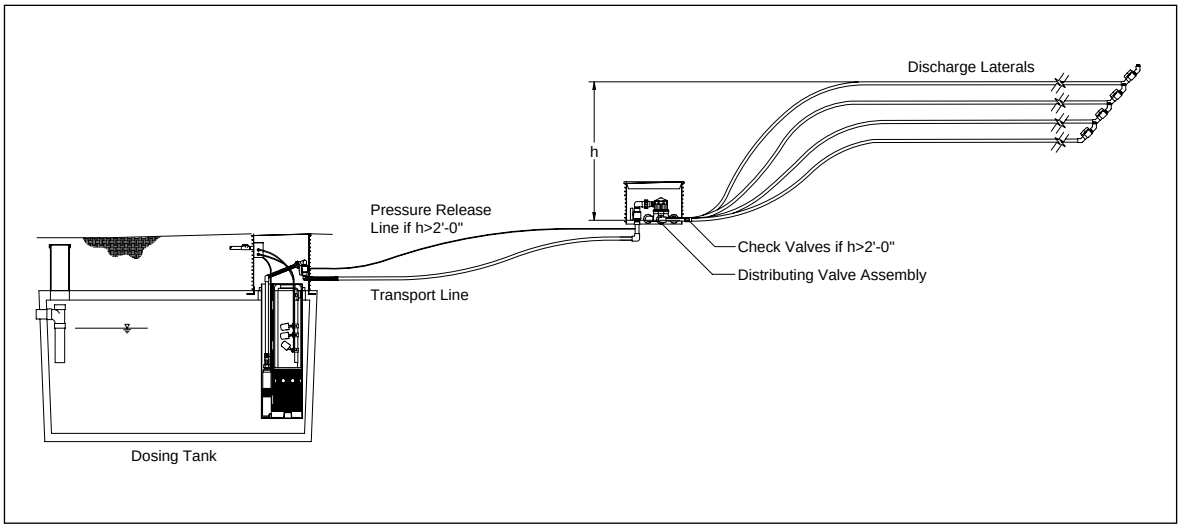

Figure 5:
Valve assembly below final discharge point

Maintenance

Annually check for proper operation by following procedures listed in the Hydrotek Valve booklet and system startup procedures listed above.

Troubleshooting

1. PROBLEM: Valve does not change or cycle to next zone or outlet

CAUSE: The stem and disk assembly is not rotating when water flow is turned off and then back on.

SOLUTION 1: Ensure that there is no debris inside the cam. Clean and carefully reinstall the cam.
SOLUTION 2: If fewer than the maximum number of outlets are being used, check the installation of the cam. Ensure that the stem and disk assembly is not being held down by an improperly installed cam. Refer to the cam replacement instructions.

SOLUTION 3: Remove the valve top and check for proper movement of stem and disk assembly. Check for and remove any debris or foreign objects that may jam or retard the movement of the disk.

SOLUTION 4: Check for freedom of movement of stem and disk assembly up and down over the center pin in bottom of valve. Scale deposits may build up on the pin and hold stem and disk assembly down. Clean pin and again check for freedom of movement.

SOLUTION 5: Be sure that all operating outlets are not capped and that the flow to operating zones is not restricted in any manner. This would cause pressure to build up in the valve and lock the stem and disk assembly in the down position.

SOLUTION 6: The backflow of water from uphill lines may be preventing the valve from cycling properly. This can happen when the valve is placed too far below an elevated line. If the valve cannot be placed close to the high point of the system, a check valve should be installed near the valve in the outlet line that runs uphill from the valve and a drain line installed just prior to the valve to relieve the pressure.

2. PROBLEM: Water comes out of all the valve outlets

CAUSE: Stem and disk assembly not seating properly on valve outlet.

SOLUTION 1: Check for sufficient water flow. A minimum flow rate is required to properly seat the disk as shown in Table 1.

SOLUTION 2: Remove the valve top and check the inside walls to ensure that nothing is interfering with the up and down movement of the stem and disk assembly inside the valve.

SOLUTION 3: Make sure that the operating outlets are not capped and that the flow to the operating zones are not restricted in any manner.

3. PROBLEM: Valve skips outlets or zones

CAUSE: Pumping into an empty transport line — especially downhill — may cause the valve to skip outlets from pockets of air allowing the rubber flap disk to raise during a cycle.

SOLUTION 1: Keep the transport line full.

SOLUTION 2: If the line must remain empty between cycles, use a larger diameter transport line laid at a constant grade to prevent air pockets from forming.

CAUSE: The stem and disk assembly is being advanced past the desired outlet.

SOLUTION 1: Ensure that the correct cam for the desired number of zones is installed and that the outlet lines are installed to the correct outlet ports of the valve as indicated by the zone numbers on the top of the cam.

Distributing Valves

Submittal
Data Sheet

Orenco Systems®
Incorporated
1-800-348-9843

Applications

Automatic Distributing Valve Assemblies are used to pressurize multiple zone distribution systems including textile filters, sand filters and drainfields.

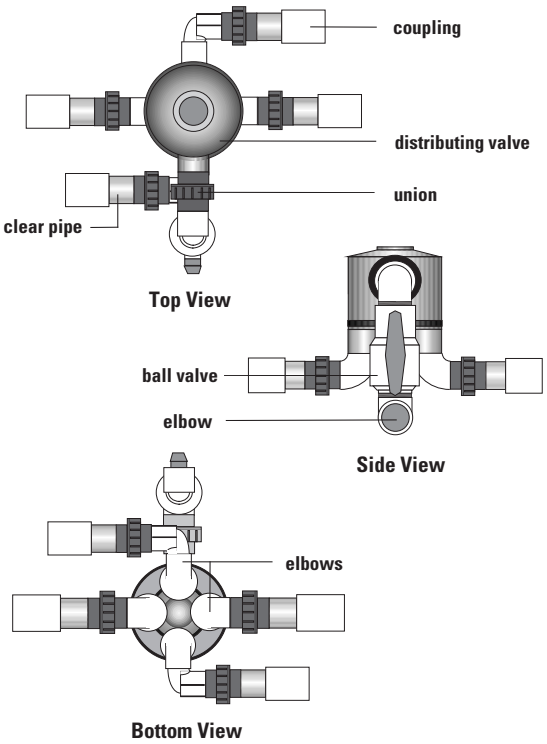

General

Orenco's Automatic Distributing Valve Assemblies are mechanically operated and sequentially redirect the pump's flow to multiple zones or cells in a distribution field. Valve actuation is accomplished by a combination of pressure and flow. Automatic Distributing Valve Assemblies allow the use of smaller horsepower pumps on large sand filters and drainfields. For example, a large community drainfield requiring 300 gpm can use a six-line Valve Assembly to reduce the pump flow rate requirement to only 50 gpm.

Orenco only warrants Automatic Distributing Valves when used in conjunction with High-Head Effluent Pumps with Biotube® Pump Vaults to provide pressure and flow requirements, and to prevent debris from fouling valve operation. An inlet ball valve and a section of clear pipe and union for each outlet are provided for a complete assembly that is easy to maintain and monitor. Ideal valve location is at the high point in the system. Refer to Automatic Distributing Valve Assemblies (NTP-VA-1) for more information.

Standard Models

V4402A, V4403A, V4404A, V4605A, V4606A, V6402A, V6403A, V6404A, V6605A, V6606A.

Nomenclature

V □□ □□ A

- A — Indicates assembly
- □□ — Number of active outlets
- □□ — Model series:
  - 44 = 4400 series (2-4 outlets)
  - 46 = 4600 series (5-6 outlets)
  - 64 = 6400 series (2-4 outlets)
  - 66 = 6600 series (5-6 outlets)
- V — Distributing valve

Specifications

Materials of Construction

All Fittings:	Sch. 40 PVC per ASTM specification
Unions:	Sch. 80 PVC per ASTM specification
Ball Valve:	Sch. 40 PVC per ASTM specification
Clear Pipe:	Sch. 40 PVC per ASTM specification
V4XXX Distributing Valves:	High-strength noncorrosive ABS polymer and stainless steel
V6XXX Distributing Valves:	High-strength noncorrosive ABS polymer, stainless steel, and die cast metal

Distributing Valves (continued)

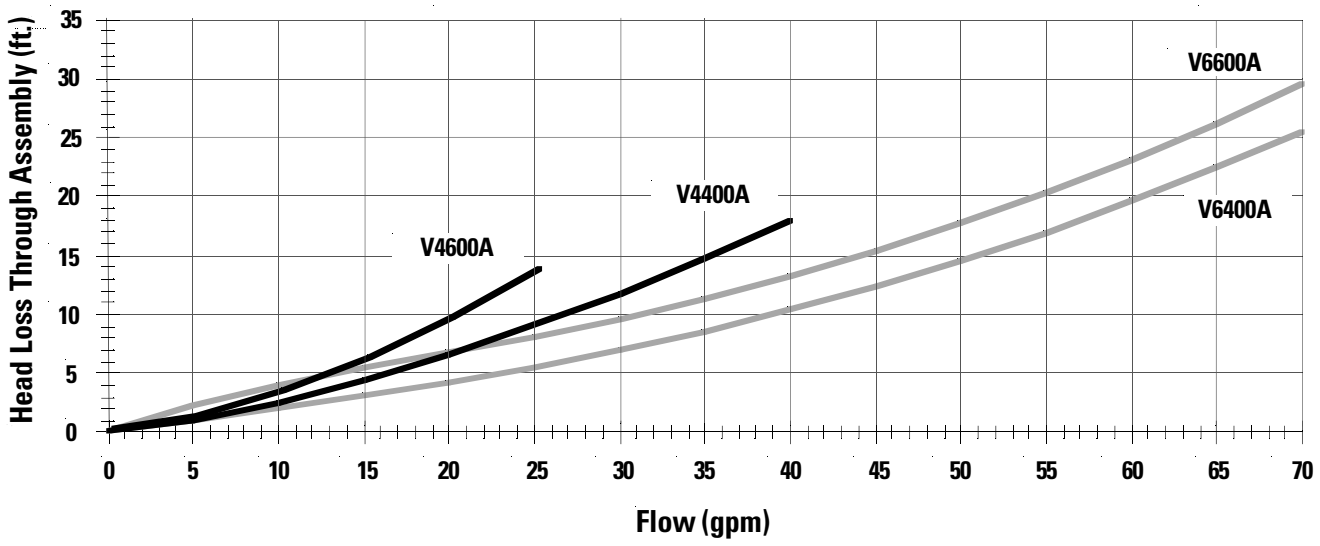

Model	Inlet Size (in.)	Outlets Size (in.)	Flow range (gpm)	Max Head (ft.)	Min. Enclosure
V4402A	1.25	1.25	10 - 40	170	VB1217
V4403A	1.25	1.25	10 - 40	170	VB1217
V4404A	1.25	1.25	10 - 40	170	VB1217
V4605A	1.25	1.25	10 - 25	170	RR2418
V4606A	1.25	1.25	10 - 25	170	RR2418
V6402A	1.5	1.5	15 - 100	345	RR2418
V6403A	1.5	1.5	15 - 100	345	RR2418
V6404A	1.5	1.5	15 - 100	345	RR2418
V6605A	1.5	1.5	15 - 100	345	RR2418
V6606A	1.5	1.5	15 - 100	345	RR2418

INFILTRATOR WATER TECHNOLOGIES

QUICK4 PLUS STANDARD CHAMBER
TYPICAL TRENCH DETAIL
SECTION VIEW

(NOT TO SCALE)

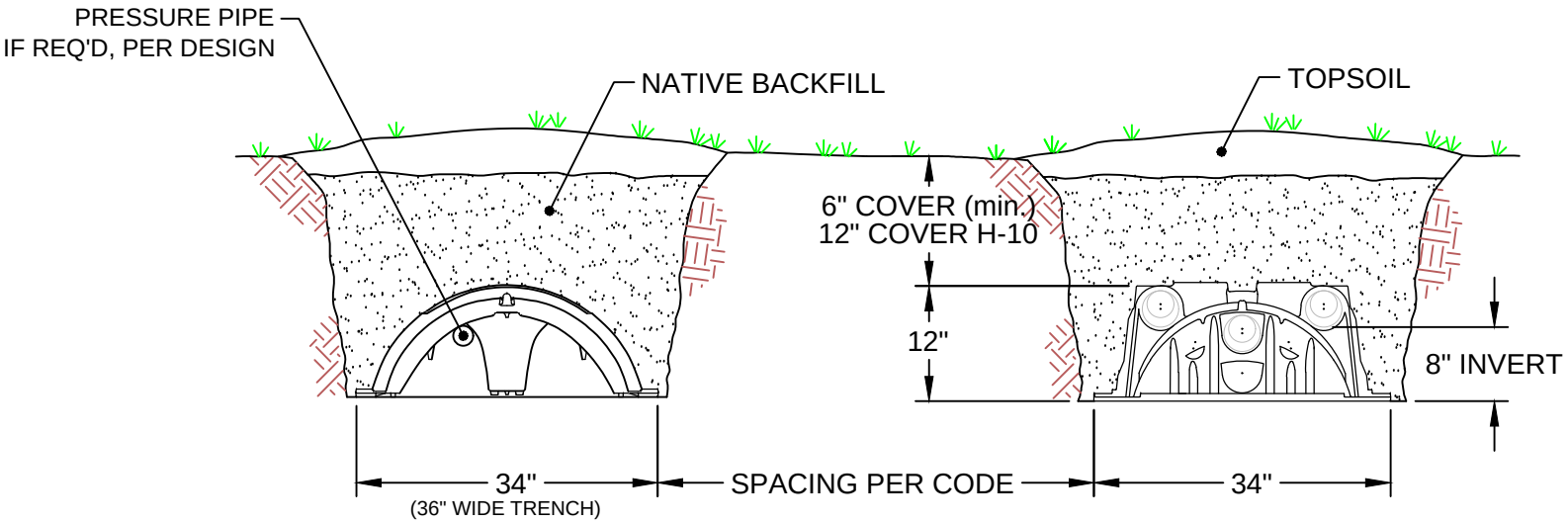

* LENGTH AND NUMBER OF TRENCHES DETERMINED BY DESIGN.

INFILTRATOR
water technologies

INFILTRATOR WATER TECHNOLOGIES
4 Business Park Rd. Old Saybrook, CT 06475
(800) 221-4436

QUICK4 PLUS STANDARD CHAMBER
TYPICAL TRENCH DETAIL
SECTION VIEW

Drawn by: EMB		Date: 05/20/2015
Scale: NOT TO SCALE	Checked by: DFH	Sheet: 1 of 1

INFILTRATOR®
water technologies

Quick4™ PLUS
CHAMBER SYSTEMS

The Quick4® Plus Standard Chamber

Quick4 Plus™ Series

The Quick4 Plus Standard Chamber offers maximum strength through its two center structural columns. This chamber can be installed in a 36-inch-wide trench. Like the original line of Quick4 chambers, it offers advanced contouring capability with its Contour Swivel Connection™ which permits turns up to 15-degrees, right or left. It is also available in four-foot lengths to provide optimal installation flexibility. The Quick4 Plus All-in-One 12 Endcap, and the Quick4 Periscope are available with this chamber, providing increased flexibility in system configurations.

Maximum Strength

Quick4 Plus Standard Chamber Specifications

Size 34”W x 53”L x 12”H (864 mm x 1346 mm x 305 mm)
Effective Length 48” (1219 mm)
Louver Height 8” (203 mm)
Storage Capacity 47 gal (178 L)
Invert Height 0.6” (15 mm), 5.3” (135 mm), 8.0” (203 mm), 12.7” (323 mm)

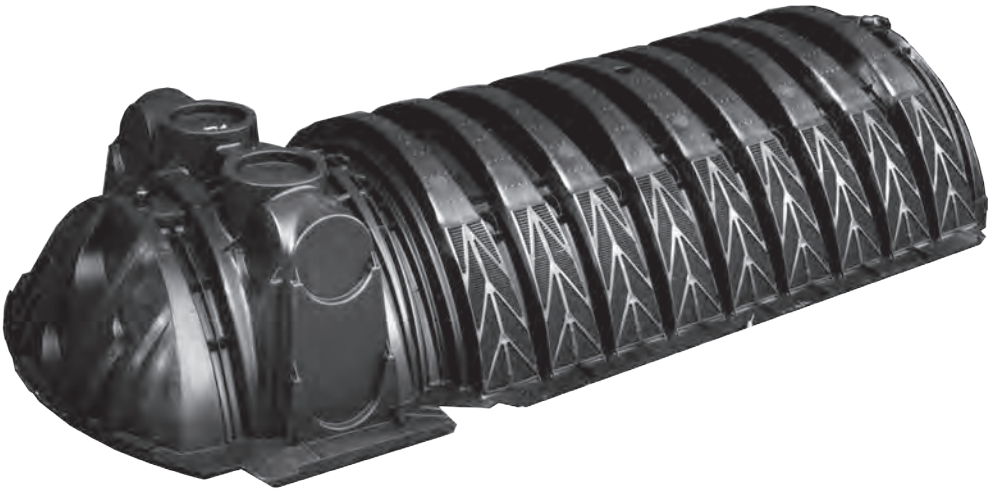

Quick4 Plus Standard Chamber Benefits:

- Two center structural columns offer increased stability and superior strength
- Advanced contouring connections
- Latching mechanism allows for quick installation
- Four-foot chamber lengths are easy to handle and install
- Supports wheel loads of 16,000 lbs/axle with 12” of cover

Quick4 Plus All-in-One 12 Endcap Benefits:

- May be used at the end of chamber row for an inlet/outlet or can be installed mid-trench
- Mid-trench connection feature allows construction of chamber rows with center feed, as an alternative to inletting at the ends of chamber rows
- Center-feed connection allows for easy installation of serial distribution systems
- Pipe connection options include sides, ends or top

Quick4 Plus All-in-One Periscope Benefits:

- Allows for raised invert installations
- 180° directional inletting
- 12” raised invert is ideal for serial applications

Certified by the International Association of Plumbing and Mechanical Officials (IAPMO)

IAPMO R&T

APPROVED in _____

Quick4 Plus Standard Chamber

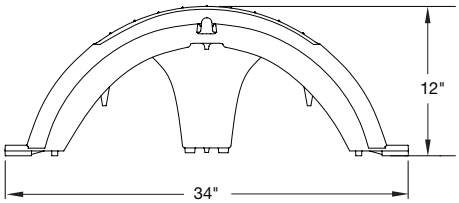

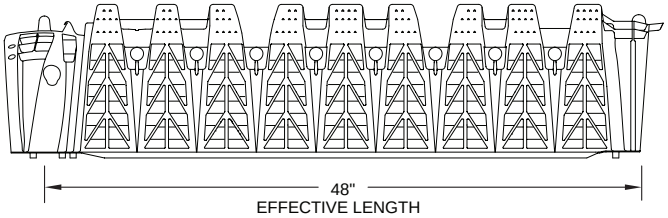

Quick4 Plus All-in-One 12 Endcap

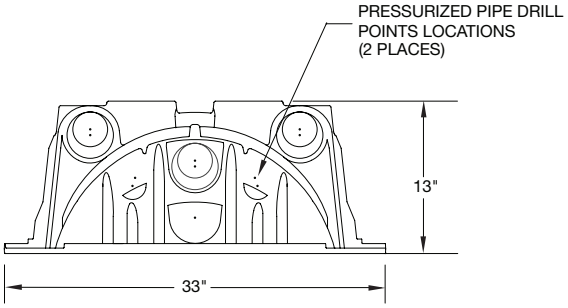

FRONT VIEW

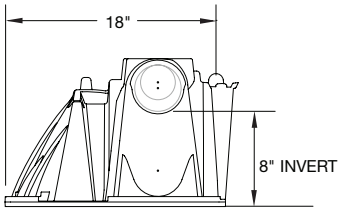

SIDE VIEW

Quick4 Plus All-in-One Periscope

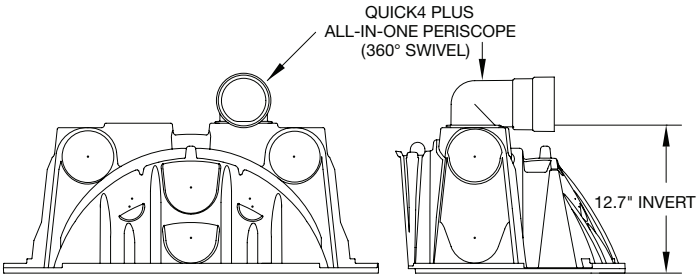

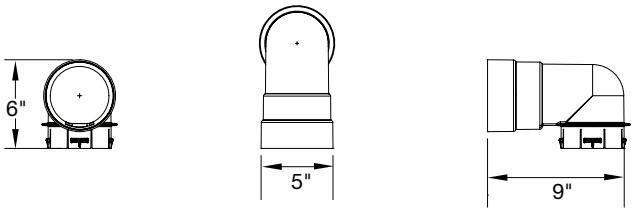

INFILTRATOR WATER TECHNOLOGIES STANDARD LIMITED WARRANTY

(a) The structural integrity of each chamber, endcap and other accessory manufactured by Infiltrator ("Units"), when installed and operated in a leachfield of an onsite septic system in accordance with Infiltrator's instructions, is warranted to the original purchaser ("Holder") against defective materials and workmanship for one year from the date that the septic permit is issued for the septic system containing the Units; provided, however, that if a septic permit is not required by applicable law, the warranty period will begin upon the date that installation of the septic system commences. To exercise its warranty rights, Holder must notify Infiltrator in writing at its Corporate Headquarters in Old Saybrook, Connecticut within fifteen (15) days of the alleged defect. Infiltrator will supply replacement Units for Units determined by Infiltrator to be covered by this Limited Warranty. Infiltrator's liability specifically excludes the cost of removal and/or installation of the Units.

(b) THE LIMITED WARRANTY AND REMEDIES IN SUBPARAGRAPH (a) ARE EXCLUSIVE. THERE ARE NO OTHER WARRANTIES WITH RESPECT TO THE UNITS, INCLUDING NO IMPLIED WARRANTIES OF MERCHANTABILITY OR FITNESS FOR A PARTICULAR PURPOSE

(c) This Limited Warranty shall be void if any part of the chamber system is manufactured by anyone other than Infiltrator. The Limited Warranty does not extend to incidental, consequential, special or indirect damages. Infiltrator shall not be liable for penalties or liquidated damages, including loss of production and profits, labor and materials, overhead costs, or other losses or expenses incurred by the Holder or any third party. Specifically excluded from Limited Warranty coverage are damage to the Units due to ordinary wear and tear, alteration, accident, misuse, abuse or neglect of the Units; the Units being subjected to vehicle traffic or other conditions which are not permitted by the installation instructions; failure to maintain the minimum ground covers set forth in the installation instructions; the placement of improper materials into the system containing the Units; failure of the Units or the septic system due to improper siting or improper sizing, excessive water usage, improper grease disposal, or improper operation; or any other event not caused by Infiltrator. This Limited Warranty shall be void if the Holder fails to comply with all of the terms set forth in this Limited Warranty. Further, in no event shall Infiltrator be responsible for any loss or damage to the Holder, the Units, or any third party resulting from installation or shipment, or from any product liability claims of Holder or any third party. For this Limited Warranty to apply, the Units must be installed in accordance with all site conditions required by state and local codes; all other applicable laws; and Infiltrator's installation instructions.

(d) No representative of Infiltrator has the authority to change or extend this Limited Warranty. No warranty applies to any party other than the original Holder.

The above represents the Standard Limited Warranty offered by Infiltrator. A limited number of states and counties have different warranty requirements. Any purchaser of Units should contact Infiltrator's Corporate Headquarters in Old Saybrook, Connecticut, prior to such purchase, to obtain a copy of the applicable warranty, and should carefully read that warranty prior to the purchase of Units.

INFILTRATOR®
water technologies

4 Business Park Road
P.O. Box 768
Old Saybrook, CT 06475
860-577-7000 • Fax 860-577-7001
1-800-221-4436
www.infiltratorwater.com

U.S. Patents: 4,759,661; 5,017,041; 5,156,488; 5,336,017; 5,401,116; 5,401,459; 5,511,903; 5,716,163; 5,588,778; 5,839,844 Canadian Patents: 1,329,959; 2,004,564 Other patents pending.
Infiltrator, Equalizer, Quick4, and SideWinder are registered trademarks of Infiltrator Water Technologies. Infiltrator is a registered trademark in France. Infiltrator Water Technologies is a registered trademark in Mexico.
Contour, MicroLeaching, PolyTuff, ChamberSpacer, MultiPort, PosiLock, QuickCut, QuickPlay, SnapLock and StraightLock are trademarks of Infiltrator Water Technologies.
PolyLok is a trademark of PolyLok, Inc. TUF-TITE is a registered trademark of TUF-TITE, INC. Ultra-Rib is a trademark of IPEX Inc.
© 2013 Infiltrator Water Technologies, LLC. All rights reserved. Printed in U.S.A.

PLUS05 0713

Orifice Shields

Applications

Orenco® Orifice Shields are used in a pressurized distribution system to protect the orifices from backfill debris that might cause orifice blockage.

Orifice shield installed on lateral pipe, standard configuration

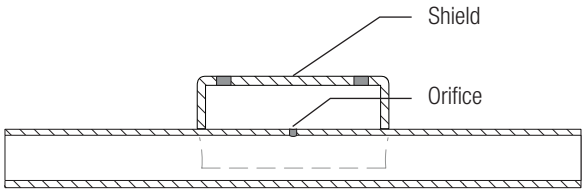

Cutaway view, standard configuration

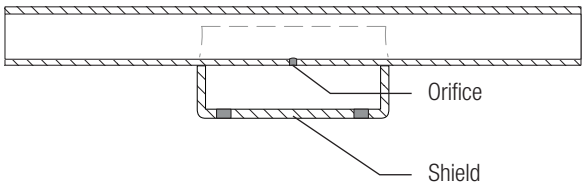

Cutaway view, cold weather configuration

General

Orenco Orifice Shields snap-fit onto laterals. They may be placed on top of or beneath a lateral, depending on the location of the orifice. Orifice shields are covered by method-of-use patent # 5,360,556.

Standard Models

OS075, OS100, OS125, OS150, OS200

Product Code Diagram

OS [ ]

Lateral pipe size, nominal:
075 = 0.75 in. (20 mm)
100 = 1.00 in. (25 mm)
125 = 1.25 in. (32 mm)
150 = 1.50 in. (40 mm)
200 = 2.00 in. (50 mm)

Orifice shield

Material of Construction

PVC per ASTM D-1784

Physical Specifications

Model	Shield O.D. in. (mm)	Lateral pipe O.D. in. (mm)
OS075	3.5 (89)	1.05 (27)
OS100	3.5 (89)	1.315 (33)
OS125	3.5 (89)	1.66 (42)
OS150	4.5 (114)	1.90 (48)
OS200	4.5 (114)	2.375 (60)

Do Your Part, Be SepticSmart:

The Do's and Don'ts of Your Septic System

Learn these simple steps to protect your home, health, environment and property value:

septicsmart
U.S. Environmental Protection Agency

Protect It and Inspect It:

Do:

- Have your system inspected (in general) every three years by a licensed contractor and have the tank pumped, when necessary, generally every three to five years.

Think at the Sink:

Don't:

- Pour cooking grease or oil down the sink or toilet.
- Rinse coffee grounds into the sink.
- Pour household chemicals down the sink or flush them.

Do:

- Eliminate or limit the use of a garbage disposal.
- Properly dispose of coffee grounds & food.
- Put grease in a container to harden before discarding in the trash.

Don't Overload the Commode:

Don't:

- Flush non-degradable products or chemicals, such as feminine hygiene products, condoms, dental floss, diapers, cigarette butts, cat litter, paper towels, pharmaceuticals.

Do:

- Dispose of these items in the trash can!

Shield Your Field:

Don't:

- Park or drive on your drainfield. The weight can damage the drain lines.
- Plant trees or shrubs too close to your drainfield, roots can grow into your system and clog it.

Do:

- Consult a septic service professional to advise you of the proper distance for planting trees and shrubs, depending on your septic tank location.

Don't Strain Your Drain:

Don't

- Concentrate your water use by using your dishwasher, shower, washing machine, and toilet at the same time. All that extra water can really strain your septic system.

Do:

- Stagger the use of water-generating appliances. This can be helpful especially if your system has not been pumped in a long time.
- Become more water efficient by fixing plumbing leaks and consider installing bathroom and kitchen faucet aerators and water-efficient products.

For more SepticSmart tips, visit: **www.epa.gov/septicsmart**

EPA 832-R-13-002 • September 2013

ALPINE TITLE

113 East Georgia Avenue
Gunnison, CO 81230
Phone (970) 641-4600
Fax (866) 689-9558

P.O. Box 3008
502 Whiterock Ave, #204
Crested Butte, CO 81224
Phone (970) 349-2728
Fax (866) 689-9558

May 3, 2017

Title Report

Land+Shelter
Attn: Andrea Korber
Via e-mail: andi@landandshelter.com

Andi,

Alpine Title, LLC, having conducted a careful and diligent search of the records of Gunnison County, Colorado, does hereby certify to the following information.

SUBJECT PROPERTY

Tract EX1, REPLAT OF TACT A AND EX1, MARBLE SKI AREA, FILLING NO. 1, LUC 1996-019, as described in instrument recorded March 25, 1997 at Reception No. 474588, and re-recorded April 17, 1997 at Reception No. 475046,
County of Gunnison,
State of Colorado.

DOCUMENTS OF RECORD that refer to RESTRICTIONS

Master Declaration – Protective Covenants for Marble Ski Area, Inc. recorded June 21, 1971 at Reception No. 284585.

Gunnison County Planning Commission Finding of No Impact recorded March 25, 1997 at Reception No. 474588 and rerecorded on April 17, 1997 at Reception No. 475046.

Town of Marble, Colorado Ordinance No. 5 recorded on July 27, 1998 at Reception No. 485392.

Town of Marble, Colorado Ordinance No. 6 recorded on July 27, 1998 at Reception No. 485393.

Town of Marble, Colorado Ordinance No. 9 recorded on July 27, 1998 at Reception No. 485394.

Liability hereunder is hereby limited to the fee paid for search and this report.

By: _____
Alpine Title

BOOK 429 PAGE 32

Filed for record the 21 day of June A. D. 19 71 at 2:25 o'clock P. M. Marion A. Smith RECORDER

Reception No. 284585 By _____ DEPUTY

MASTER DECLARATION

PROTECTIVE AND DESIGN COVENANTS FOR

MARBLE SKI AREA, INC.

INDEX

SUBJECT		PAGE
Section I	PURPOSES	1
1.1	General	1
1.2	Particular	2
Section II	DEFINITIONS	2
2.1	Definitions in General	2
2.2	Association	2
2.3	Building	3
2.4	Commercial Area	3
2.5	Committee	3
2.6	Common Open Space	3
2.7	Condominiums	3
2.8	Corporation	3
2.9	Declaration	3
2.10	Dwelling	3
2.11	Dwelling - Multiple Family	3
2.12	Dwelling - Single Family	3
2.13	Dwelling Unit	3
2.14	Floor Area Unit	3
2.15	Grade Level	4
2.16	Gross Floor Area	4
2.17	Home Owners Committee	4
2.18	Landscaped Easement	4
2.19	Lot	4
2.20	Master Development Plan	4
2.21	Off-Street Parking Space	4
2.22	Property	5
2.23	Residential Area	5
2.24	Ski Area Facilities	5
2.25	Structure	5
2.26	Structure Alteration	5
2.27	Structure Height	5
2.28	Village Committee	6
2.29	Variance	6
Section III	PROPERTY SUBJECTED TO DECLARATION PROVISIONS	6
3.1	Regulated Property	6
3.2	Supplemental Declaration	6

Section IV	RIGHTS AND OBLIGATIONS OF THE MARBLE SKI AREA ASSOCIATION, INC.	6
4.1	Establishment of Association	6
4.2	Organization	6
4.3	Certificate of Incorporation and By-laws	7
4.4	Right to Make Rules, Regulations and Grant Variances	7
4.5	Charges for Use of Facilities	7
4.6	Right to Dispose of Facilities	8
4.7	Implied Rights of Association	8
4.8	Governmental Successor	8
4.9	Legal Responsibility of the Association	8
4.10	Indemnification	8
4.11	General Functions of the Association	9
4.11.1	Property Maintenance Function	9
4.11.2	Parking Function	9
4.11.3	Village Operation Function	9
4.11.4	Security Function	9
4.11.5	Television Function	9
4.11.6	Other Functions	10
Section V	FINANCING OF THE ASSOCIATION	10
5.1	Levying of Assessments	10
5.2	Annual Budget	10
5.3	Payment of Levy and Assessment	11
5.4	New Functions or Facilities	11
5.5	Personal Liability of Owner of Property	12
5.6	Liability of Purchasers and Encumbrancers	12
5.7	Certificate of Assessments Due	12
5.8	Implementation	13
Section VI	RIGHTS AND OBLIGATIONS OF THE REGULATION AND DESIGN COMMITTEES	13
6.1	Appointment of Committee Members	13
6.2	Change in Membership	13
Section VII	LAND CLASSIFICATIONS AND PROVISIONS APPLICABLE THERETO	13
7.1	Land Classifications	13
7.2	Restrictions for Commercial Land	14
7.2.1	Time for Construction	14
7.2.2	Signs	14
7.2.3	Service Entrances	14
7.2.4	Off-Street Parking	14

7.2.5	Other Provisions	14
7.3	Common Open Space Restrictions	14
7.4	Landscaped Easement Restrictions	15
7.5	Restrictions for All Classifications of Residential Land	15
7.5.1	Dwelling Size	15
7.5.2	Lot Coverage	16
7.5.3	Building Location	16
7.5.4	Signs	16
7.5.5	Commercial Vehicles	16
7.5.6	Private Automobiles and Other Vehicles or Machinery	16
7.5.7	Nuisance	16
7.5.8	Animals	17
7.5.9	Other Provisions	17
7.6	Residential Land Restrictions for Single Family Dwellings	17
7.6.1	Dwelling Height	17
7.6.2	Combined Lots	17
7.6.3	Off-Street Parking	17
7.6.4	Time for Construction	17
7.7	Residential Land Restrictions for Multiple Family Dwellings	18
7.7.1	Dwelling Height	18
7.7.2	Off-Street Parking	18
7.7.3	Time for Construction	18
Section VIII	PROVISIONS APPLICABLE TO ALL PROPERTY	19
8.1	Resubdivision of Property	19
8.2	Combining of Land Parcels	19
8.3	Construction on Combined Land Parcels .	20
8.4	Occupancy of Structures	20
8.5	Temporary Residences	20
8.6	Home Occupations	20
8.7	Roof Appurtenances	20
8.8	Building Standards	20
8.9	Unnatural Drainage	20
8.10	Water and Disposal of Sewage	21
8.11	Refuse and Rubbish	21
8.12	Underground Utilities	21
8.13	Easements	21
8.14	Parking on Public Roads	21
8.15	Back Slopes into Building Sites	21
8.16	State of Property Repair and Failure to Make Repairs	21

Section IX	REQUIRED APPROVAL OF ALL CHANGES TO PROPERTY OR STRUCTURE	22
9.1	Change in the Existing State of Property or Structure	22
9.2	Approval of Change in Existing State Required	22
9.3	Clearing of Trees and Vegetation	22
9.4	Grading	23
9.5	Driveways.	23
9.6	Fences	23
9.7	Architectural Control	23
9.8	Procedure for Requesting Approval of Plans and Specifications	23
9.8.1	Committee and Association Criteria for Approval	24
9.8.2	Data to be Submitted	24
9.9	Fees	25
9.10	Prosecution of Work After Approval	25
9.11	Inspection.	26
9.12	Estoppel Certificate	26
Section X	VARIANCES	26
10.1	Granting of Variances and Effect of Variance	26
Section XI	MISCELLANEOUS PROVISIONS	26
11.1	Duration of Restrictions	26
11.2	Amendment or Revocation	26
11.3	Arbitration of Disputes.	27
11.4	Effect of Provisions of Declaration	27
11.5	Enforcement and Remedies	28
11.6	Protection of Encumbrancer	28
11.7	Limited Liability	28
11.8	Successors and Assigns of Association . .	28
11.9	Severability.	29
11.10	Captions	29
11.11	No Waiver.	29

PROTECTIVE AND DESIGN COVENANTS

MASTER DECLARATION

FOR

MARBLE SKI AREA, INC.

KNOW ALL MEN BY THESE PRESENTS: That this Master Declaration of Protective and Design Covenants made this 19th day of June, 1971, by Marble Ski Area, Inc., a Colorado Corporation for all subdivided areas or lots as filed in the records of Gunnison County, Colorado hereinafter referred to as Marble Ski Area and those supplemental declarations which may be filed in addition hereto affecting separate plat filings of Marble Ski Area as designed, and to be recorded from time to time setting forth specific regulations within each separate subdivision plat filing, which together with this Master Declaration shall constitute the Protective and Design Covenants of Marble Ski Area.

NOW THEREFORE, in consideration of the acceptance hereof by the purchasers and grantee (s), their executors, administrators, successors, and assigns and all persons or concerns claiming by, through or under such grantees of deeds to lots in Marble Ski Area, said Marble Ski Area, Inc., hereby declares to and agrees with each and every person who shall be or who shall become owners of any of said lots that said lots, in addition to the regulations of the County of Gunnison, State of Colorado, shall be and are hereby bound by the covenants set forth in these presents and that the property to which these restrictions are applicable shall be held and enjoyed, subject to and with the benefit and advantage of the restrictions, limitations, conditions and agreements as set forth in this Declaration and any supplemental declaration hereto.

I. PURPOSES

1.1 General: Marble Ski Area, Inc., the declarant, presently owns or controls certain real property and expects to acquire additional real property in the general area commonly known as the Marble Area of Gunnison County, Colorado. Marble Ski Area, Inc., expects to develop certain portions of said real property in accordance with a Master Development Plan as a fully integrated recreation and resort area providing facilities for skiing and other related types of recreation

and supporting activities and facilities.

All areas, whether to be used for residential or commercial purposes, will be developed to provide certain common facilities for the benefit of all persons owning property living in or visiting the Marble Ski area.

The residential areas shall provide for a variety of densities of land occupancy, permanent open space, recreation, suitable building conformancy such as single and multiple family dwellings including condominium ownership and other uses complementary to and in harmony with the residential use of land. Certain residential lands will be developed with the objective of establishing the area as a scenic, pastoral or forested mountain residential area of the highest possible quality and attractiveness where the natural beauty and unspoiled state of the land will be preserved as near as may be possible and where persons may reside and enjoy the pleasant environment.

1.2 Particular: This Declaration is executed to define and describe certain land or property classifications; to define and describe certain provisions, covenants, conditions, and restrictions which may be made applicable to some or all property in the Marble Ski Area; to provide for a management association to perform certain obligations with respect to some or all of the property within the Marble Ski Area; and to establish the manner and extent to which property may be made subject to the provisions set forth in this declaration or may be subject to additional or different provisions, covenants, conditions and restrictions and to establish the effect of such.

II. DEFINITIONS.

2.1 Definitions in General: For purpose of this Declaration, certain terms and words are herein defined. Words used in the present tense include the future, words in the singular number include the plural, and words in the plural include the singular. The word "shall" is mandatory and not permissive; the word "structure" includes the word "building". The following additional words and phrases shall, for the purpose of this Declaration, have the following meanings:

2.2 Association: Association shall mean Marble Ski Area Association, Inc., a Colorado corporation not for profit, formed and incorporated to be and constitute the Association to which reference is made in this Declaration and to further the common interests of all owners of any real property which may become subject to the provisions of this Declaration or in any amendments or supplemental declarations made hereto.

2.3 Building: See Structure.

2.4 Commercial Area: Lands designated to be used for construction of facilities of a commonly recognized commercial nature normally used by business enterprises engaging in retail sales of goods and/or services, and enterprises offering personal services.

2.5 Committee: Committee shall mean either the Marble Home Owners Regulation and Design Committee of the Marble Ski Area Association, Inc., or the Marble Village Regulation and Design Committee of the Marble Ski Area Association, Inc., and when the term Committees is used it shall mean to include both the Home Owners Committee and the Village Committee as described above.

2.6 Common Open Space: Common Open Space shall mean any parcel of property shown on a recorded plat or described in a recorded instrument which is clearly identified as "Common Open Space". Any parcel of property identified under any land classification designation may be changed to Common Open Space by Marble Ski Area, Inc., by declaration recorded prior to conveyance of the parcel by Marble Ski Area, Inc.

2.7 Condominiums: Any building constructed where certain lands and/or improvements are held in common ownership by participating individuals under mutual agreement as governed by the laws of the condominium Ownership Act of the State of Colorado.

2.8 Corporation: Corporation shall mean Marble Ski Area, Inc., a Colorado corporation; any successor or assign of Marble Ski Area, Inc., under an instrument specifically designating such successor assign as a successor or assign under this Declaration.

2.9 Declaration: Declaration shall mean this document and any amendments or supplemental declarations made thereto.

2.10 Dwelling: Any structure or portion thereof which is designed and used exclusively for residential purposes.

2.11 Dwelling - Multiple Family: A structure consisting of two or more dwelling units.

2.12 Dwelling - Single Family: A structure consisting of one dwelling unit.

2.13 Dwelling Unit: One or more rooms in a dwelling designed for occupancy by one family.

2.14 Floor Area Unit: An assigned area of 900 square feet used to determine the gross floor area of a multiple family structure.

2.15 Grade Level: The average of the ground levels of a lot, prior to construction thereon, measured at the center of all walls of a building.

2.16 Gross Floor Area: The maximum allowable floor area to be constructed on an individual lot or group of combined lots of multiple family classification. Gross floor area is determined by multiplying the number of floor area units designed on a recorded plat or in a recorded instrument by 900 square feet. This product does not define the minimum or maximum number of dwelling units allowable, but is the maximum allowable gross floor area.

2.17 Home Owners Committee: Home Owners Committee shall mean the Marble Home Owners Regulation and Design Committee of the Marble Ski Area Association, Inc.

2.18 Landscaped Easement: Landscaped easement shall mean any portion of any lot or other parcel of property designated on a recorded plat or in a recorded instrument as "Landscaped Easement."

2.19 Lot: A lot shall mean any parcel of property shown on a recorded plat as a lot or described in a recorded instrument. The term lot is in contradistinction to land identified on any recorded plat or described in any recorded instrument as common open space landscaped easement, easement or right-of-way.

2.20 Master Development Plan: Master Development Plan shall mean a comprehensive plan showing the proposed uses of land within the Marble Ski Area. The Master Development Plan sets forth the location of various classifications of land, designates their general use and in addition, for residential lands, establishes their maximum densities of dwelling units.

2.21 Off-Street Parking Space: Off-street parking shall be of two classifications: (1) Surface off-street parking; (2) covered or underground off-street parking. An off-street parking space shall consist of the following area requirements.

(1) A surface off-street parking space shall consist of at least 300 square feet of area for parking of the vehicle and snow storage. In addition, adequate space shall be provided to allow for proper ingress, egress and vehicle maneuvering; however, the gross area requirements for off-street parking shall consist of not less than 450 square feet per parking space.

(2) A covered or underground off-street parking space shall consist of at least 200 square feet of area for parking of the vehicle. In addition, adequate space shall be provided to allow for proper ingress, egress, vehicle maneuvering; however, the gross area requirements for off-street parking shall consist of not less than 325 square feet per parking space.

2.22 Property: Property shall mean any land or improvements which now or may hereafter be subject to this Declaration including lots, Common Open Space, Commercial or Residential Lands, and any other parcels or property under any other land classification designation, and including public or private streets, roads, easements or ways and including any and all improvements on any of the foregoing.

2.23 Residential Area: Lands designated to be used for construction of facilities of a generally recognized residential nature.

2.24 Ski Area Facilities: Ski Area Facilities shall mean ski tows or lifts, including towers, cables and structures of facilities used in direct connection with operation of such tows or lifts; ski trails or runs; roads used in connection with maintenance or operation of tows, lifts, trails or runs; areas occupied or used for tow or lift lines; areas which are occupied by open racks for skis which are available for use by the public without charge; ski school meeting areas; and ski patrol facilities and first aid facilities for skiers; and shall include areas or facilities occupied or used for sale of ski tow or lift tickets, for sale of ski school lessons or for sale of skiing instructions, or for maintenance shops or for offices of the owner or operator of Ski Area Facilities.

2.25 Structure: Any building constructed or erected for the support, shelter or enclosure of persons, animals or chattels, but not including fences, walls used as fences or retaining walls less than six (6) feet in height, but shall include surrounding swimming pools.

2.26 Structure Alteration: Any change in the supporting members of a building, such as bearing walls, partitions, columns, beams, girders or any complete rebuilding of the roof or exterior walls.

2.27 Structure Height: The vertical distance of all walls of a structure measured from the grade level of a lot, prior to construction thereon, to the highest point of the roof surface exclusive of chimneys, ventilators, pipes and similar apparatus.

2.28 Village Committee: Village Committee shall mean the Marble Village Regulation and Design Committee of the Marble Ski Area Association, Inc.

2.29 Variance: Any exception to the provisions of this Declaration specifically authorized in writing by the Association or Marble Ski Area, Inc.

III. PROPERTY SUBJECTED TO DECLARATION PROVISIONS:

3.1 Regulated Property: Any real property which has heretofore or may hereafter be subdivided by plat filed in the records of Gunnison County, Colorado in the name and style of Marble Ski Area and made subject hereto.

3.2 Supplemental Declaration: Any real property may be made subject in whole or in part to any or all of the provisions, covenants, and restrictions of this declaration by the recording, in the office of the County Clerk and Recorder of Gunnison County, Colorado, or an instrument (hereinafter called a Supplemental Declaration) executed by Marble Ski Area, Inc., describing the property, and stating that, except as may be specifically stated in such Supplemental Declaration, the real property described therein shall be subject to the provisions hereof and to the additional or different provisions, which may be contained in such Supplemental Declaration, and such provisions shall be effective upon the recording thereof.

IV. RIGHTS AND OBLIGATIONS OF THE MARBLE SKI AREA ASSOCIATION, INC.

4.1 Establishment of Association: Marble Ski Area, Inc., will establish the Marble Ski Area Association, Inc., as a vehicle to perform certain functions and to hold and manage certain property for the common benefit of all owners of property within the Marble Ski Area and shall define certain rights and obligations of the Association, and certain rights and obligations of owners of property within the Marble Ski Area with respect to the Association, and with respect to the functions undertaken and property held by the Association.

4.2 Organization: The Marble Ski Area Association, Inc., a Colorado Corporation not for profit, shall consist of an elected board of directors. Means of electing the board of directors shall be set forth in the Articles of Incorporation of the Association, but in general representation is to consist of land owners or their agents in the Marble Ski Area.

4.3 Certificate of Incorporation and By-laws. The Certificate of Incorporation and, where applicable, the By-laws of the Association, as adopted shall (a) outline the purposes and powers for which the Marble Ski Area Association, Inc., is established, (b) define the rights and obligations of said Association with respect to the property owners and the property the subject of this Declaration, (c) set forth the rights and obligations of the property owners with respect to said Association, (d) provide for the election of directors, (e) establish the Marble Village Regulation and Design Committee and the Marble Homeowners Regulation and Design Committee as hereinafter provided and shall define the functions of such committees, and (f) shall include any reasonable provisions necessary to effectuate the corporate powers as conferred on said corporation by law or as outlined herein, but no provision thereof shall be inconsistent with the provisions of this Declaration.

4.4 Right to Make Rules, Regulations and Grant Variances: The Association shall be authorized to and shall have the power to adopt and enforce rules and regulations and grant variances thereto, applicable within Marble Ski Area, to prevent or reduce fire hazard; to prevent disorder and disturbances of the peace; to regulate pedestrian and vehicular traffic; to regulate use of any and all facilities to assure fullest enjoyment of use by the persons entitled to enjoy and use the same; to promote the general health, safety and welfare of persons within Marble Ski Area; and to protect and preserve property and property rights. All rules and regulations adopted by the Association shall be reasonable and shall be uniformly applied. Each owner and guest shall be obligated to and shall comply with and abide by such rules and regulations. The Association may provide for enforcement of any such rules and regulations through exclusion of violators from facilities, injunctive relief, or otherwise.

4.5 Charges for Use of Facilities: Subject to the provisions of this Declaration requiring the consent of the Marble Ski Area, Inc., with respect to property furnished thereby, the Association may establish reasonable and uniformly applied charges for use of Facilities to assist the Association in offsetting the costs and expenses of the Association attributable thereto. Each Owner and Guest shall be obligated to and shall pay any such charges for use should they be imposed. No real property or interest in real property, including improvements thereon, and no personal property or equipment granted or furnished by Marble Ski Area, Inc., to the Association shall be used or operated by the Association or by any other person or entity for commercial use, profit or gain without the written consent of Marble Ski Area, Inc.; and no charges shall be imposed by the Association for use of property or

facilities granted or furnished by Marble Ski Area, Inc., to the Association without the written consent of Marble Ski Area, Inc.

4.6 Right to Dispose of Facilities: Subject to the provisions of this Declaration requiring the consent of Marble Ski Area, Inc., with respect to property furnished thereby, the Association shall have full power and authority to sell, lease, grant rights in, transfer, encumber, abandon or dispose of any facilities.

4.7 Implied Rights of Association: The Association shall have and may exercise any right or privilege given to it expressly in this Declaration or given to it by law, except to the extent limited by the terms and provisions of this Declaration, and shall have and may exercise every other right or privilege or power and authority necessary or desirable to fulfill its obligations under this Declaration, including the right to engage necessary labor and acquire use of or purchase necessary property, equipment or facilities; employ a professional director or other personnel necessary to manage affairs of the Association; and obtain and pay for legal, accounting and other professional services as may be necessary or desirable.

4.8 Governmental Successor: Any facility of the Association and any function may be turned over to a governmental authority which is willing to accept and assume the same upon such terms and conditions as the Association shall deem to be appropriate with the consent of the Owners of a majority of the lots bearing the costs and expenses relating to any such facility or function.

4.9 Legal Responsibility of the Association: The Association shall be responsible for the enforcement of the provisions of this Declaration. The issuance of a building permit or license, which may be in contravention of these protective covenants, shall not prevent the Association from enforcing these provisions. It shall also be lawful, in the event of a breach of any of the covenants or conditions of this Declaration which the Association may fail to enforce, for the Owner or Owners of any lot in Marble Ski Area to institute, maintain and prosecute any proceedings at law, or in equity against the person violating any of the provisions of this Declaration for injunctive relief and specific performance thereof, or to recover damages for the violation thereof.

4.10 Indemnification: The Association shall be obligated to and shall indemnify Marble Ski Area, Inc., and hold it harmless from all liability, loss, cost, damage and expense, including attorneys' fees, arising with respect to any operations of the Association or any facilities or functions.

4.11 General Functions of the Association: The Association, as designated in this Declaration may undertake any activites or services which in their opinion are necessary or desirable for the benefit of the members of the Association and within the scope of their powers as outlined in the articles and by-laws of the Association including but not exclusively those described in the following sub-paragraphs 4.11.1 through 4.11.6. In order to perform said functions, the Association may hold and manage real or personal property as provided in this Declaration to further the common interests of all owners of property subject to the provisions contained herein, and the Association shall have all powers necessary to desirable to effectuate these purposes.

4.11.1 Property Maintenance Function: The Association may accept title to any real property or equipment granted or furnished by Marble Ski Area, Inc., to the Association; pay all taxes and assessments of whatever nature relating to any of said property; adequately and fully insure all of said property against casualty loss; provide for the best and highest quality care, operation, management, maintenance, repair and replacement of the same which could include, in addition to normal upkeep and repair, rubbish removal and the removal of snow to the extent necessary to assure full use of the property or facilities regulated hereby.

4.11.2 Parking Function: The Association may care for, operate, manage and maintain parking areas on land of commercial classification only which may include signs, landscaping and other facilities appurtenant to parking areas; and clean and removal snow from any of said parking areas.

4.11.3 Village Operation Function: The Association may do all things that may be necessary or desirable to keep and maintain the lands under Association ownership in the Marble Village and other such lands of commercial classification safe, attractive and desirable.

4.11.4 Security Function: Until such time as adequate police and fire protection is provided by an appropriate governmental authority, the Association may provide police and fire protection within the Marble Ski Area which could include a fire watch system, periodic fire prevention inspections and equipment certifications.

4.11.5 Television Function: The Association may pay a fair share of the costs and expenses of any television system provided by a suitable area-wide, non-profit, organization to assure suitable and adequate television reception in the Marble Ski Area through a television booster, translator or cable system.

4.11.6 Other Functions: Subject to the provisions of this Declaration for approval of Owners affected, and the provisions herein restricting commercial profit-making activities by the Association, the Association may undertake other functions as may be deemed advisable on a self-supporting, special assessment or other basis.

V. FINANCING OF THE ASSOCIATION

5.1 Levying of Assessments: Each property owner, including property owners purchasing property under contract from Marble Ski Area, Inc., shall pay to the Association an annual levy or assessment on a prorata share basis as may be necessary to defray the costs and expenses of the Association functions as herein provided; that each property owner shall receive one membership unit in the Association for each single family residential lot, one membership unit for each dwelling unit designated for each multiple family unit lot (including condominiums) and one membership unit for each commercial tract; that each owner shall also receive one additional membership unit for the value of all improvements placed on such lots or tracts in the ratio of one membership unit for each $25,000.00 or any part thereof of the value of such improvements; that in the event less than the maximum number of dwelling units are constructed on a multiple family lot and sold as condominium units, each condominium owner will receive a membership unit for the interest in the land and additional membership units for the value of the improvements owned by him as above provided; that such additional membership units shall be established by the Association at the time the plans for such improvements shall be approved by said Association and shall be issued to become effective as of the date of completion of such improvements; that occupancy of a dwelling shall be conclusive evidence of its completion.

5.2 Annual Budget: The board of directors of said Association, on or before April 1, 1972 and annually thereafter shall establish a proposed budget which in its opinion is sufficient to defray the costs of operation of said Association, including a reasonable sum set aside for contingencies or reserve for the next ensuing fiscal year; that said budget shall be in an amount necessary to cover the costs and expenses of the functions to be undertaken or performed by the Association and to fulfill any long term or continuing commitments of the Association; that the Association, except as emergencies may arise, shall make no commitment or expenditure in excess of the funds budgeted; that the Board of Directors shall mail a copy of said budget, together with notice of the annual meeting, to each property owner at his address as shown on the books of said Association; that the notice shall indicate the amount of levy on each membership unit that will be necessary to defray such annual costs and shall designate a date for the annual meeting of the property owners; that said annual meeting shall be

within the first 15 calendar days of the month of May in each calendar year, the exact date to be set by the Board of Directors, on which date said budget shall be considered and adopted with such changes as may be made by the directors of said Association at said annual meeting; that said annual meeting shall also coincide with a date established for the election of directors to said Association as provided in the by-laws of said Association, that such budget shall be for the fiscal year commencing June 1 next after the date of said meeting; that said budget and notice of said meeting shall be mailed to said property owners by ordinary regular mail at least thirty days prior thereto; that in establishing the budget the directors shall carefully consider all comments and opinions of the property owners and attempt to provide to the best of their ability and within the means available all functions of said Association as above outlined or as subsequently adopted. In establishing the levy and assessment, consideration shall be given to all anticipated revenues of said Association in addition to the monies raised by said levy and assessment; that once established, adopted and approved said budget shall constitute the budget for said Association for the ensuing fiscal year and the budget as finally approved shall be mailed to all property owners on or before June 1 next following such annual meeting, together with a notice of the amount of assessments due based on the levy and assessment established for each property owner, which notice shall include the terms of payment and the method of enforcement as hereinafter provided.

5.3 Payment of Levy and Assessment: All assessments shall become due and payable on June 1, the beginning of each fiscal year, and shall become delinquent on September 1 of each fiscal year; that said Association shall establish procedures for the payment and issuing receipts therefor; that if such assessment is not paid by September 1 it shall bear interest at the rate of 1% per month or for any part of a month that said payments are in default; that said Association shall have a lien against any property owned by the property owner which may be the subject of such levy and assessments to secure the payment of any amounts due the Association, including such assessment, interest thereon and all costs and expenses for collecting such unpaid assessments, including a reasonable attorney's fee; that said lien may be foreclosed in a manner for foreclosing of mortgages in the State of Colorado and a certificate from the secretary of said Association shall be evidence of said lien.

5.4 New Functions or Facilities: Prior to the acquisition of new facilities or undertaking new functions (except from or at the request

of Marble Ski Area, Inc.) at a cost in excess of $5.00 per annum per membership unit, the board of directors of said Association shall estimate the initial and subsequent costs and income of such new facility or function and shall furnish a copy of the proposal and its estimated costs and income to all holders of a membership unit and such new function or facility shall not be undertaken by the Association unless approved by at least 60% of the holders of membership certificates voting on such proposals; that the board of directors may consider such new facilities or functions at an annual meeting or at a special meeting called for this purpose; that written notice that an election will be held to consider such new function or facility shall be given each holder of membership units at least thirty days prior to such election; that voting by proxy shall be allowed; that in the event the Association accepts the responsibility for new functions or facilities designed for the benefit of one segment or one class of owners of membership units at the request of such class or segment, the Association may segregate the costs and expenses of said new function or facility and assess for such costs only those of the particular segment or class utilizing said new function or facility; that in this event, only those membership units within the segment or class shall vote on such proposals.

5.5 Personal Liability of Owner of Property: The amount of any levy, assessment or charge as herein provided payable by the property owner shall be the joint and several obligation of the persons or entities who constitute the property owners at the time the amount was payable and may be recovered by suit or money judgment by the Association without foreclosing or waiving any lien securing the same.

5.6 Liability of Purchasers and Encumbrancers. A purchaser of any property subject to these Declarations shall be jointly and severally liable with the seller of the property for any unpaid levy, assessments or charges appurtenant to the property sold and purchased which had accrued or was payable at the time of the sale of said property; that no holder of a lien or encumbrance on any property shall be personally liable for any levy, assessment or charge and the lien for such levy, assessment and charge shall be junior to any lien or encumbrance on said property taken or acquired in good faith and for value without notice and perfected by recording prior to the time a notice of failure to pay any such amount is recorded in the office of the Clerk and Recorder of Gunnison County against said property.

5.7 Certificate of Assessments Due. Upon written request of any person with an interest in any property subject to this Declaration the Association shall furnish a written statement detailing the amount

of any unpaid levy, assessment or charges, if any, with respect to the particular property the subject of such request, together with the amount of the current year's assessments whether delinquent or not if established by the Association at the time said request is received, which statement shall be conclusive upon the Association; that said Association may make a reasonable charge for furnishing this information.

5.8 Implementation: That the Board of Directors of said Association are hereby authorized and directed to promulgate and enforce the performance of the functions herein delegated to said Association, provided that no such rules or regulations shall be contrary to the provisions of this Declaration.

VI. RIGHTS AND OBLIGATIONS OF THE REGULATION AND DESIGN COMMITTEES:

6.1 Appointment of Committee Members: The Association shall be responsible for the organization and appointment for specific terms of members to the Marble Village Regulation and Design Committee and the Marble Home Owners Regulation and Design Committee.

6.2 Change in Membership: In the event of expiration of appointed term, death or resignation of any member from either Committee, the Association shall have full authority to designate a successor. Neither the members of the Committees, nor their designated representatives shall be entitled to any compensation for services performed pursuant to this Declaration; however, at the discretion of the Association said members or designated representatives may be reimbursed for any actual costs expended in implementation of Association obligations.

VII. LAND CLASSIFICATIONS AND PROVISIONS APPLICABLE THERETO:

7.1 Land Classifications: For purposes of this Declaration, there are hereby established four (4) basic classifications of land and shall be known under the following land use designations:

1. Commercial Land
2. Common Open Space
3. Landscaped Easements
4. Residential Land
    a. Single Family
    b. Multiple Family

7.2 Restrictions for Commercial Land: Commercial lands shall be used primarily for use and development by shops, stores, businesses, personal services, hotels and lodges, or other enterprises or services customarily incidental thereto.

7.2.1 Time for Construction: At the time plans and specifications for construction on commercial land receive approval from the Association, the prospective builder shall proceed diligently with construction of said building, and the same shall be completed within a maximum period of eighteen (18) months' time from the date of commencement; excepting, however, that this period may be extended at the discretion of the Association.

7.2.2 Signs: No free standing or roof sign of any type shall be allowed in any commercial area or on any commercial structure and only wall-type signs shall be permitted. No sign shall be installed on any structure without first having submitted complete plans and specifications to the Association for their review and having received written approval of such from the Association.

7.2.3 Service Entrances: All service entrances must be screened from view by means of architectural design of the structure, site design of the entrance, or planting of vegetation indigenous of the area. No service entrance shall be constructed or put into operation without first having submitted complete plans and specifications to the Association showing the structure and site service entrances and the method or treatment of screening from view; and having received written approval of such from the Association.

7.2.4 Off-Street Parking: Off-street parking shall be supplied at the ratio determined by the Association for each structure of a commercial nature to be built and prior to commencement of construction the property owner shall receive, in writing, from the Association the determination of the number, size and types of off-street parking spaces required.

7.2.5 Other Provisions: All commercial land shall be subject to the provisions requiring approval by the Association as set forth in Section IX of this Declaration.

7.3 Common Open Space Restrictions: Common Open Space shall be kept exclusively as a scenic and natural forested or natural open area except as herein stated. Upon approval of the Association portions of common open space may be developed for non-profit recreation and

leisure-time activities for the benefit of owners of property subject to this Declaration, their guests and invitees; and portions of Common Area may be developed as may be reasonably necessary for installation of utilities (preferably underground where practical and feasible) or to provide or improve access to or from or to enhance the use and enjoyment of any Property.

Common Open Space shall at all times be held by Marble Ski Area, Inc., or by the Association, or, with the consent of Marble Ski Area, Inc., by an appropriate governmental authority, including a park or recreation district, which is existing or may be organized and willing to accept and maintain the same. For so long as any Common Open Space is owned or held by Marble Ski Area, Inc., or by the Association and until and unless conveyed to a governmental authority, any such Common Open Space shall be maintained by the Association and shall be held for the exclusive use of owners of Property, their invitees and guests. Marble Ski Area, Inc., or the Association, may at any time limit or restrict use of all or portions of any Common Open Space to certain uses, may prescribe rules and regulations governing its use.

7.4 Landscaped Easement Restrictions: Any portion of a lot or other parcel of property designated as a landscaped easement shall be preserved and maintained at all times as near as may be in a natural state and no above-ground improvements, except necessary crossings by access driveways, bridges, or paths, shall be permitted thereon providing that the Association may grant a variance permitting the use of such easement for structures as necessary for the utilization of the lot.

7.5 Restrictions for all Classifications of Residential Land: Each building site shall be used exclusively for residential living purposes are customarily incidental thereto and no building site shall be improved except with a residential structure or complex. Unless otherwise specified in a Supplemental Declaration the locations of residential building sites of specified densities and building conformity shall be as shown and in harmony with the Master Development Plan.

7.5.1 Dwelling Size: Each dwelling unit shall occupy a floor area, actually and fully enclosed within the structure, of not less than 800 square feet. In comptuing such minimum areas, the area of open porches, carports and garages shall not be included.

7.5.2 Lot Coverage: Notwithstanding uses permitted herein, no more than sixty percent (60%) of the total lot area shall be covered by the principal dwelling structure.

7.5.3 Building Location: No building shall be located on any lot nearer than 25 feet to the front lot line or nearer than 25 feet to any side street right-of-way line. No building shall be located on any lot nearer than 10 feet to an interior lot line or nearer than 15 feet to the rear lot line; except, however, any building constructed on a lot identified on a recorded plat or any supplemental declaration as having an average slope of 35 percent or greater may be located within 10 feet of the front lot line. For the purposes of this Declaration, eaves, steps and open porches shall not be considered as part of a building, provided, however, that this shall not be construed to permit any portion of a building on a lot to encroach upon another lot.

7.5.4 Signs: No sign of any character shall be displayed or placed upon any residential lot except one professional sign of not more than three (3) square feet in area per side advertising the property for sales, house numbers, occupant's name or signs used by a builder approved in writing by the Subdivider to advertise the property during the construction and sales period. All signs are subject to the approval of the Assocation.

7.5.5 Commercial Vehicles: No commercial type vehicles or trucks shall be stored or parked on any lot except in a closed garage, or parked on any road or accessway except while engaged in transportation to or from a dwelling. For the purposes of this Declaration, a 3/4 ton or smaller vehicle, commonly known as a pickup truck shall not be deemed to be a commercial vehicle or truck.

7.5.6 Private Automobiles and Other Vehicles or Machinery: No inoperative private automobiles and other vehicles or machinery and no travel trailers, house trailers or camper boxes shall be placed and remain on any lot for more than 48 hours unless stored or parked in a garage or carport. However, this covenant shall not be applicable for equipment being used in conjunction with construction of a building upon a lot.

7.5.7 Nuisance: Nothing shall be done or permitted on any lot or land parcel which may be or become an annoyance or nuisance to the subdivision development. No noxious or offensive activites or commercial business or trade shall be carried on upon any lot.

7.5.8 Animals: No animals, livestock, or poultry of any kind shall be housed, raised or kept on any lot, either temporarily or permanently, except that commonly accepted domestic household pets including horses, may be kept, provided they are not kept or maintained for any commercial purposes, and are properly fenced on the owners property.

7.5.9 Other Provisions: Residential land of all classifications shall be subject to the provisions requiring approval by the Association as set forth in Section IX of this Declaration.

7.6 Residential Land Restrictions for Single Family Dwellings: Lots in this land classification shall be improved only with a residence structure or complex designed to accommodate no more than a single family and any hired personnel and occasional guests plus such other improvements and structures as necessary to customarily incident to a single family residence.

7.6.1 Dwelling Height: The designated maximum dwelling height shall be 35 feet. The height requirements may be waived by the Association when in their opinion, such structures relate to sound architectural planning and land use, and conform to the over-all design and pattern of the development. Under all circumstances the relationship of the height of vegetation on the lot should be the major factor influencing dwelling height. It is desirable that the building height not exceed the vegetation height wherever possible.

7.6.2 Combined Lots: At the discretion of the land owner who may own adjacent lots of single family residential classification the following schedule of dwellings may be applied:

1 Building Site	-	1 Dwelling Unit
2 Building Sites	-	2 Dwelling Units
3 Building Sites	-	3 Dwelling Units

The owner may build dwelling units on combined lots in either an attached or detached configuration. Any dwelling units to be constructed in an attached configuration must be developed according to a planned unit design site plan and said plan must be approved by the Association.

7.6.3 Off-Street Parking: One off-street parking space shall be provided on each single family dwelling lot.

7.6.4 Time for Construction: At the time plans and specifications for

construction of a single family dwelling receive approval from the Association, the prospective builder shall proceed diligently with construction of said building, and the same shall be completed within a maximum period of nine (9) months' time from the date of commencement; excepting, however, that this period may be extended by the Association an additional three (3) month period if said extension is made necessary by reason of inclement weather, inability to obtain material, strikes, acts of God, etc.

7.7 Residential Land Restrictions for Multiple Family Dwellings: Lots in this land classification may be improved only with a multiple family residence or complex.

7.7.1 Dwelling Height: The designated maximum dwelling heights for a multi-family structure shall be 50 feet. The designated maximum building height requirements may be waived by the Association when in their opinion, such structures relate to sound architectural planning and land use, and conform to the overall design and pattern of the development. Under all circumstances the relationship of the height of vegetation on the lot should be the major factor influencing dwelling height.

7.7.2 Off-Street Parking: For multi-family dwellings off-street parking shall be provided on each site at the following rates:

Dwelling Units of efficiency or one bedroom - 1 space/ dwelling unit

Dwelling Units of more than one bedroom - 1.5 spaces/ dwelling unit

For parking lot construction, the maximum allowable exposed cut or fill slope shall be fifteen (15) feet measured along the slope on the cut or fill. The maximum allowable slope on cut or fill shall be 1.5 to 1, horizontal to vertical distance.

7.7.3 Time for Construction: At the time plans and specifications for construction of a multiple family dwelling receive approval from the Association, the prospective builder shall proceed diligently with construction of said building, and the same shall be completed within a maximum period of eighteen (18) months time from the date of commencement;

excepting, however, that this period may be extended if said extension is made necessary by reason of inclement weather, inability to obtain material, strikes, acts of God, etc.

VIII. PROVISIONS APPLICABLE TO ALL PROPERTY

8.1 Resubdivision of Property: No Building Site, Common Open Space, or parcel of property identified under any land classification designation may be subdivided, resubdivided or a fractional portion thereof sold or conveyed so as to be held in divided ownership, except that a lot on which a multiple family dwelling is constructed may be divided and sold, or conveyed in condominium ownership as recognized under the Condominium Ownership Act of Colorado.

8.2 Combining of Land Parcels: Two or more adjoining building sites of single family, multiple family, commercial classification or other parcels of land of the same land use classification as designated by this or any supplemental declaration which are under the same ownership may be combined and developed as one parcel. Common boundary lines and setback lines along any common boundary line of the combined parcels may be removed and shall be deemed removed if the written consent of the Association is obtained and if the Association prior to giving its consent, finds and determines that any improvements to be constructed within the setback lines will not cause unreasonable diminution of the view from other property. Easements created or established by Marble Ski Area, Inc., along any common boundary line of the combined parcels may be changed without the consent of any person entitled to use thereof if the written consent of the Association is obtained and if alternate easements are granted or created, satisfactory to the Association, by the owner of the combined parcels. If setback lines are removed or easements changed along the common boundary line of combined parcels, the combined parcels shall thereafter be deemed one parcel, and may not thereafter be split and developed as two land parcels.

8.3 Construction on Combined Land Parcels: Where combined lots are being utilized for development of a grouping of dwellings, a site plan must be submitted to and approved by the Association prior to commencement of any construction.

8.4 Occupancy of Structures: Under no circumstance shall any dwelling be occupied by more families than what it was designed for and no structure of any type shall be occupied or used until the same shall be substantially completed and a certificate of occupancy shall have been issued through the Association.

8.5 Temporary Residences: No structure of temporary character, trailer, mobile home, basement, tent or accessory building shall be used on any lot as a residence or place of business temporarily or permanently, and no used structure of any sort shall be moved onto any lot. Trailers which are to be used for construction offices, may, at the discretion of the Association, be granted a variance for the allowable construction period.

8.6 Home Occupations: In areas of the Marble Ski Area where the land is classified as residential, home occupations will generally be discouraged. Under no circumstance shall a home occupation be permitted except through written approval of the Association.

8.7 Roof Appurtenances: No air-conditioning units, evaporative cooler or other object other than a radio or T.V. antenna shall be placed upon the roof of any dwelling or building except or unless such air-conditioning unit is architecturally concealed from view and plans for concealment have been submitted to and approved by the Association.

8.8 Building Standards: All structures shall conform with the current edition of the Uniform Building Code published by the International Conference of Building Officials as a guide for sound construction. Furthermore, all buildings shall conform to current editions of the National Electric and National Plumbing Codes.

8.9 Unnatural Drainage: Under no circumstance shall any owner of any Building Site or land parcel be permitted to alter the topographic conditions of his Building Site or land parcel in any way that would permit unusual additional quantities of water from any source, to flow from his property onto any other property or public right-of-way.

8.10 Water and Disposal of Sewage: No building construction shall be commenced unless said structure can be connected to a public water supply and sewage collection and disposal system or other facilities as may be approved by the Colorado State Health Department.

8.11 Refuse and Rubbish: Rubbish, garbage or other waste shall be kept and disposed of in a sanitary manner. No lot or easement shall be used or maintained as a dumping ground for rubbish. All containers or other refuse shall be kept in a clean, sanitary condition and screened from view. Outdoor burning of trash shall not be permitted at any time.

8.12 Underground Utilities: All power lines, telephone lines, television cables, antenna, towers, poles or other facilities for the transmission or reception of visual signals or electricity shall be installed underground where practical and feasible, or other construction as may be approved by the Association.

8.13 Easements: Easements of five (5) feet in width across certain side lot lines and ten (10) feet in width across certain rear lot lines, are granted as shown on the recorded subdivision plat for drainage, utilities of all types, their installation and maintenance. No buildings or structures of any kind shall be built over or across said easements, but such easements shall remain open and readily accessible for service and maintenance of utility facilities unless terminated in the manner provided by appropriate proceedings.

8.14 Parking on Public Roads: Parking may be allowed on public roads if in the opinion of the Association or Gunnison County it will not interfere with traffic flow, maintenance of the roadway or snow removal.

8.15 Back Slopes into Building Sites: Back slopes that are required to construct roads may be extended into the Building Sites.

8.16 State of Property Repair and Failure to Make Repairs: All property owners, for the benefit of the general health, safety, and welfare of the general public, must keep their property in a sound state of repair which is complimentary to the area and in equal or better repair than adjacent properties. Any owner of property who, in the opinion of the Association, does not keep his property and improvements thereon in a sound state of repair, the Association may give notice to the property owner in writing, listing the specific improvements to be made and recommending that said property and improvements be brought up to a good state of repair. If after thirty (30) days from notification the recommended improvements have not been made, the subject property or structure improvements will be discussed

at a meeting of the Board of Directors of the Association. If so directed by said Board the recommended repairs to the subject property shall be made at the owner's expense plus ten (10) percent of the actual cost of repair. Said repair costs shall be charged to the property as a lien thereon to the extent as if said costs were an annual levy and assessment.

IX. REQUIRED APPROVAL OF ALL CHANGES TO PROPERTY OR STRUCTURE:

9.1 Change in the Existing State of Property or Structure: Change in the existing state of property or structure shall mean, without limitation, the construction of any building, its alteration or other improvement, including utility facilities; the excavation, filling or similar disturbance of the surface of land including, without limitation, change of grade, stream bed, ground level or drainage pattern; the clearing, marring, defacing or damaging of trees, shrubs, or other growing things; the landscaping or planting of trees, shrubs, lawns or plants, changes in existing state of property or structure shall also include any change or alteration, without limitation, any change of color, texture or exterior appearance or exterior alteration of any structure or previously approved Change in the Existing State of Property.

9.2 Approval of Change in Existing State Required: No change in the existing state of property shall be made or permitted without the prior written approval of the Association and without compliance with the provisions, set forth in this Declaration. The following paragraphs of this Article IX, however, shall not be applicable to any change in the existing state of property by Marble Ski Area, Inc.

9.3 Clearing of Trees and Vegetation: Approval shall be obtained from the Association to cut down, clear, or kill any trees on any lot of any land classification. Further, each and every property owner agrees that all trees cleared by him will be disposed of in such a way that all lots whether vacant, occupied by dwellings, or other structures, shall be kept free of accumulations of brush, trash, or other materials which may constitute a fire hazard or render a lot unsightly, provided, however, that this shall not operate or restrict property owners from storing fireplace wood in neat stacks on their lots. Under no circumstances shall the owner of any lot or parcel of land disturb the natural soil or grasses unless he immediately thereafter constructs upon, paves, gravels or replants such area with ground cover approved by the Association. Property owners are encouraged to use plant types native to the area and to avoid installation of "surburban appearing" lawns and plantings.

9.4 Grading: A grading plan shall be presented to the Association for their approval prior to commencing construction of any structure on any lot and no additional grading on any lot shall be permitted without prior approval by the Association.

9.5 Driveways: Prior to construction of a driveway providing access to a residential lot, plans shall be submitted to the Association showing the proposed driveway location in relation to the street and building site, its proposed grade, length and width, the provisions to prevent erosion and the proposed finished surface material. Under no circumstance shall construction of a driveway commence until written approval is given by the Association. Placement of all driveways onto lots shall be placed to allow for minimum cut and fill. Specifications for recommended driveway design are on file with the Association and all driveway construction shall meet or exceed said design specifications.

9.6 Fences: Fences shall generally be discouraged in residential areas and no fence shall be erected or installed unless its location on the lot and the materials from which it is to be constructed are approved by the Association.

9.7 Architectural Control: No building shall be erected or altered on any lot of any land classification until the construction plans and specifications regarding quality of workmanship, type of materials and harmony of external design shall have been approved by the Association. Also a site plan shall be submitted to the Association, for their approval showing the location of the proposed structure with relation to the lot as well as the location of said proposed structure with respect to topography, finish grade elevation and any existing structures on or adjacent to said lot.

9.8 Procedure for Requesting Approval of Plans and Specifications: Prior to expenditures of any substantial time or funds in the planning of any proposed change in existing state of property or structure, the owner of property shall advise the Association in writing of the general nature of the proposed change; shall for examination, comment and review file all necessary preliminary plans and specifications, pay all required fees and shall meet with the Association, if required, to discuss the proposed change. When any property owner files a request for change in existing state with the Association, the Regulation and Design Committee of the Marble Ski Area Association, Inc., having jurisdiction of land classification shall submit its comments and recommendations in writing to the Association for preliminary approval or denial of the plans and specifications, of the requested change in state and no final approval of any plans or specifications by the Association, except by Marble Ski Area, Inc., shall be rendered without first having received a recommendation from the appropriate Committee. Should the Association fail to approve or disapprove the plans

and specifications submitted to it by the owner of a lot within thirty (30) days after written request has been submitted, and all conditions precedent to approval have been met by the owner as set forth in this Declaration, then Association approval shall not be required provided, however, that no change in existing state shall be erected or allowed to remain on any lot which violates the provisions of this Declaration except as may be allowed under an approved variance.

9.8.1 Committee and Association Criteria for Approval: The Committees in making recommendations to the Association and the Association in making its final decisions for any plans for change in the existing state of property or structure shall exercise discretion with the following objectives in mind among others: To carry out the general purposes expressed in this Declaration; to prevent violation of any specific provision of this Declaration; to prevent any change in state which would be unsafe or hazardous to any persons, property or to the general public's health, safety or welfare; to assure that any change in state will be of good and attractive design and in harmony with the rustic and natural setting of the area and will serve to preserve and enhance existing features of natural beauty; and to assure that materials and workmanship for all improvements are of high quality comparable to other improvements in the area. Any change in the existing state of property or structure by Marble Ski Area, Inc., shall be made with the same objectives in mind.

9.8.2 Data to be Submitted: Data and number of copies to be submitted by the property owner to the Association for any proposed change in existing state of property or structure shall be as follows:

Data	No. of Copies
A. Detailed description of the proposed variance in writing.	2
B. Plot plan covering the particular land parcel drawn at a scale of 1" = 100'. The plot plan shall show the following:	2

1. All boundary lines.
2. Existing and proposed contours.
3. Existing and proposed improvements.
4. Existing and proposed drainage pattern.
5. Existing and proposed utility systems.
6. Existing trees and shrubs and proposed landscaping plan.
7. If the drainage pattern of any property will

Data	No. of Copies
be affected by any change, the Association may require submission of a report on the effect by a qualified engineer.	
8. Any additional information with respect to the existing state of property which the Association may reasonably require to permit it to make an informed judgment on whether or not to grant approval to the change.	
C. Building floor plans at 1/8" = 1'.	2
D. Building elevation drawings at 1/8" = 1'.	2
E. Final working drawings at 1/8" = 1'.	2
F. Final construction specifications.	2
G. Schedule of exterior materials, colors and samples of same.	2

9.9 Fees: Where buildings or other improvements which reasonably require plans and specifications are proposed to be constructed, the Association may require that the plans and specifications be prepared by an architect or designer and that a fee of $100 be paid to the Association to cover costs and expenses of review, provided that $75 of the fee may be waived by the Association if the plans and specifications furnished are prepared by a practicing architect licensed in the State of Colorado.

9.10 Prosecution of Work After Approval: Following approval by the Association of the plans and specifications for any proposed change in existing state of property or structure which has been properly submitted as described herein, said change shall be accomplished as promptly and diligently as possible and in complete conformity with the description and plans of the proposed change. Failure to accomplish the change within the time period set forth by the Association, or failure to complete the proposed change strictly in accordance with the plans and specifications presented to the Association shall operate to automatically revoke said approval and upon demand by the Association, the property or structure shall be restored, as nearly as possible, to its state existing prior to approval of the request for change in existing state. The Association and its duly appointed agents may enter upon any property at any reasonable time to inspect the progress or status of any change in the existing state of property or structure being made or which may have been made. The Association shall have the right and authority to record a notice to show that any particular change in existing state of property or structure has not been approved or that any approval given has been automatically revoked.

9.11 Inspection: Prior to giving approval of the final construction of change in the existing state of property or structure, at least one member of the Association shall physically inspect the property. No recommendation approving or disapproving the final construction of change in the existing state of property or structure shall be deemed to have been executed unless a report is made a part of the record for request and approval of said change in state.

9.12 Estoppel Certificate: Upon written request of any interested person and payment of a fee not to exceed Fifteen ($15) Dollars, the Association shall furnish a certificate with respect to approval or disapproval of final construction of any change in the existing state of property or structure; and any person, without actual notice to the contrary, shall be entitled to rely on said certificate with respect to all matters set forth therein.

X. VARIANCES

10.1 Granting of Variances and Effect of Variance: The Association may authorize variances from compliance with any of the provisions contained in this Declaration when circumstances such as topography, natural obstructions or hardships may require. Such variances must be evidenced in writing. If a variance is granted, no violation of the provisions contained herein shall be deemed to have occurred with respect to the matter for which the variance was granted. The granting of a variance shall not operate to waive any of the provisions contained in this Declaration for any purpose except as to the particular property and provision covered thereby.

XI. MISCELLANEOUS PROVISIONS

11.1 Duration of Restrictions: The foregoing provisions of this Declaration constitute an easement and servitude upon and in the lands conveyed by Marble Ski Area, Inc., running with the land and shall remain in full force and effect for twenty-five (25) years from the date hereof, at which time they shall automatically extend for successive periods of ten (10) years each unless by a vote of the majority of the then owners of the residential tracts of this subdivision, it is agreed to change them in whole or in part.

11.2 Amendment or Revocation: At any time while any provision contained in this Declaration is in force and effect, it may be amended or repealed, with the written consent of Marble Ski Area, Inc., by the recording of a written instrument specifying the amendment, executed by Marble Ski Area, Inc., and by the owners of not less than 2/3 of the

area of the property then subject to this Declaration, excluding the Common Open Space. No such amendment or repeal shall be effective with respect to the holder of a mortgage or deed of trust recorded prior to recording of the instrument specifying the amendment or repeal unless such holder executes the said instrument.

11.3 Arbitration of Disputes: All controversies arising under or with respect to arbitration in accordance with the following procedures. All determinations, decisions and actions of Marble Ski Area, Inc., the Association, or of Committee members at any meeting of such members which is made, taken or purportedly taken pursuant to any provision of this Declaration shall be binding and conclusive on every person including the Association, Marble Ski Area, Inc., and each owner of property and each such owner's heirs, personal representatives, successors and assigns, unless notice of dispute is given as herein provided and the manner is submitted to arbitration in accordance with the following procedure.

Any party desiring to arbitrate any controversy shall file written notice of his desire with the Association and any party desiring to dispute any determination as aforesaid shall file a written notice of the existence and nature of the dispute with the Association. As promptly as possible, after receipt of such notice, the party interested in the matter shall be notified by the Association and the matter shall be heard by the Association. If the matter is not settled or resolved at said hearing the parties on each side of the dispute shall select an arbitrator; the arbitrators so selected shall select an additional arbitrator; the matter of dispute shall be heard by the arbitrators at a convenient location in the State of Colorado; and a decision in the arbitration shall be rendered by the arbitrators. The decision or action as aforesaid shall be upheld by the arbitrators if it is or was properly authorized and consistent with the overall purposes of this Declaration. Costs of any arbitration shall be borne equally by the party on each side of the dispute.

11.4 Effect of Provisions of Declaration. Each provision, covenant, condition, restriction and agreement contained in this Declaration shall be deemed incorporated in each deed or other instrument by which any right, title or interest in any real property subject to this Declaration is conveyed or encumbered whether or not set forth or referred to in any such conveyance or other instrument and any person or entity accepting any right, title or interest in any parcel of property subject to this Declaration shall be conclusively deemed to have accepted and adopted the provisions, covenants, conditions, restrictions and agreements

herein contained as a personal covenant for such person or entity and it shall be binding on such person or entity and their heirs, executors, administrators, successors and assigns and the provisions hereof are made for the benefit of not only the Marble Ski Area, Inc., and the Association but for the benefit of the owners of all property the subject to this Declaration.

11.5 Enforcement and Remedies. The provisions, covenants, restrictions, conditions and agreements herein contained shall be enforceable by Marble Ski Area, Inc., the Association or any property owner the subject of these Declarations either by proceedings for injunctive relief or by suit or action to recover damages or to recover any amount due and unpaid; that they may be enforced by the exclusion of any person or entity from the use of any property or facility owned or held by the Association or from the enjoyment of any function undertaken by the Association. If Court proceedings are instituted by Marble Ski Area, Inc., or the Association in connection with the enforcement of the rights and remedies as herein provided, the prevailing party shall be entitled to recover its costs and expenses connected therewith, including a reasonable attorney's fee.

11.6 Protection of Encumbrancer: No violation or breach of any provision, restriction, covenant or condition contained in this Declaration and no action to enforce the same shall defeat, render invalid or impair the lien of any mortgage or deed of trust taken in good faith and for value and perfected by recording prior to the time of recording of an instrument giving notice of such violation or breach, or the title or interest of the holder thereof of the title acquired by any purchaser upon foreclosure of any such mortgage or deed of trust. Any such purchaser shall, however, take subject to this Declaration except only that violations or breaches which occur prior to such foreclosure shall not be deemed breaches or violations hereof with respect to such purchaser, his heirs, personal representatives, successors, and assigns.

11.7 Limited Liability: Neither Marble Ski Area, Inc., the Association, the Board of Directors of the Association, the Home Owners Regulation and Design Committee, the Marble Village Regulation and Design Committee nor any member, agent or employee of any of the same shall be liable to any party for any action or for any failure to act with respect to any matter if the action taken or failure to act was in good faith and without malice.

11.8 Successors and Assigns of Association: This Declaration shall be

binding upon assigns of the Association whether voluntary or involuntary by designation of law or otherwise, except to the extent provided in any written assignment which has the written approval of Marble Ski Area, Inc. The successors of the Association shall be bound by this Declaration and any Supplemental Declaration.

11.9 Severability: Invalidity or unenforceability of any provision of this Declaration in whole or in part by any judgment or court order shall not affect the validity or enforceability of any other provision or valid and enforceable part of a provision of this Declaration.

11.10 Captions: The captions and headings in this Declaration are for convenience only and shall not be considered in construing any provision contained in this Declaration.

11.11 No Waiver: Failure to enforce any provision, in this Declaration shall not operate as a waiver of any such provision, or of any other provision, restriction, covenant or condition.

IN WITNESS WHEREOF, Marble Ski Area, Inc., has executed the foregoing Protective and Design Covenants and Supplemental Declarations on the day and year first above written.

MARBLE SKI AREA, INC.

By _____
President

ATTEST:

_____
Secretary

STATE OF COLORADO)
) ss.
COUNTY OF Douglas)

The foregoing was acknowledged before me this 19th day of June, A.D., 1971 by John R. Zakovich as the President and by Leo J. May as the Secretary of MARBLE SKI AREA, INC., a Colorado corporation.

Witness my hand and official seal.

My commission expires: My Commission expires May 22, 1973

_____
Notary Public

ANN TRUEBLOOD NOTARY PUBLIC STATE OF COLORADO

SUPPLEMENTAL DECLARATION

FOR

MARBLE SKI AREA

CRYSTAL RIVER FILING

KNOW ALL MEN BY THESE PRESENTS: That this Supplemental Declaration is made this 19th day of June, 197 1, by Marble Ski Area, Inc., a Colorado Corporation for all property within the subdivision known as Marble Ski Area Crystal River Filing as shown on the map thereof filed in the Office of the Clerk and Recorder of Gunnison County, Colorado as Document No. _____.

I. LAND OCCUPANCY

1.1 Applicability to Crystal River Filing: All lots in Crystal River Filing shall be used for single family dwellings exclusively.

II. ADDITIONAL PROVISION

2.1 Applicability to Crystal River Filing: No additional provisions other than those set forth in this Supplemental Declaration and those set forth in the Master Declaration are provided for Marble Ski Area Crystal River Filing.

IN WITNESS WHEREOF, Marble Ski Area, Inc., has executed the foregoing Protective and Design Covenants and Supplemental Declarations on the day and year first above written.

MARBLE SKI AREA, INC.

By John P. Zakovich
President

ATTEST:

Leo J. May
Secretary

STATE OF COLORADO)
) ss.
COUNTY OF Douglas)

The foregoing was acknowledged before me this 19th day of June, A.D. 1971 by John P. Zakovich as the President and by Leo J. May as the Secretary of MARBLE SKI AREA, INC., a Colorado corporation.

Witness my hand and official seal.

My commission expires: My Commission expires May 22, 1973

Opal Pinellood
Notary Public

NOTARY PUBLIC
STATE OF COLORADO

SUPPLEMENTAL DECLARATION

FOR

MARBLE SKI AREA

FILING 1

KNOW ALL MEN BY THESE PRESENTS: That this Supplemental Declaration is made this 19th day of June, 1971, by Marble Ski Area, Inc., a Colorado Corporation for all property within the subdivision known as Marble Ski Area Filing 1 as shown on the map thereof filed in the Office of the Clerk and Recorder of Gunnison County, Colorado as Document No. _____.

I. LAND OCCUPANCY

1.1 Applicability to Filing 1: All lots in Filing 1 shall be used for single family dwellings exclusively.

II. ADDITIONAL PROVISION

2.1 Applicability to Filing 1: No additional provisions other than those set forth in this Supplemental Declaration and those set forth in the Master Declaration are provided for Marble Ski Area Filing 1.

IN WITNESS WHEREOF, Marble Ski Area, Inc., has executed the foregoing Protective and Design Covenants and Master Declarations on the day and year first above written.

MARBLE SKI AREA, INC.

BY John G Zakovich
President

ATTEST:

Leo J. May
Secretary

STATE OF COLORADO)
) ss.
COUNTY OF Douglas)

The foregoing was acknowledged before me this 19th day of June, A. D. 1971 by John G Zakovich as the President and by Leo J. May as the Secretary of Marble Ski Area, Inc., a Colorado corporation.

Witness my hand and official seal.

My commission expires: My Commission expires May 22, 1973

Ann Prudhood
Notary Public

NOTARY PUBLIC
STATE OF COLORADO

SUPPLEMENTAL DECLARATION

FOR

MARBLE SKI AREA

FILING 2

KNOW ALL MEN BY THESE PRESENTS: That this Supplemental Declaration is made this 19th day of June, 1971, by Marble Ski Area, Inc., a Colorado Corporation for all property within the subdivision known as Marble Ski Area Filing 2 as shown on the map thereof filed in the Office of the Clerk and Recorder of Gunnison County, Colorado as Document No. _____.

I. LAND OCCUPANCY

1.1 Applicability to Filing 2: All lots in Filing 2 shall be used for single family and multiple family dwellings exclusively as follows:

Single Family Lots:

Block 10 - Lots 1 through 48 inclusive
Block 11 - Lots 1 through 16 inclusive
Block 12 - Lots 1 through 14 inclusive
Block 13 - Lots 1 through 9 inclusive

Multiple Family Lots:

Block 14 - Lots 1 through 13 inclusive

II. BUILDING LOCATION

2.1 Steep Slopes: The following lots have average slopes of thirty-five percent (35%) or greater and any building constructed thereon may be located within ten (10) feet of the front lot line as provided in Section 7.5.3 of the Master Declaration.

Block 10 - Lots 3, 7, 8, 9, 15, 16, 17, 18, 19, 43, 44
Block 14 - Lots 1 through 13 inclusive
Block 13 - Lot 9

III. GROSS FLOOR AREA

3.1 Maximum Capacity: For purposes of gross floor area restrictions as described in Section 2.16 of the Master Declaration, the following maximum gross floor area capacities shall apply for Marble Ski Area Filing 2:

Block No.	Lot No.	Maximum (Gross Floor Area) Capacity in Units
Block 14	Lots 1 through 13 inclusive	10 units each

IV. ADDITIONAL PROVISIONS

4.1 Applicability to Filing 2: No additional provisions other than those set forth in this Supplemental Declaration and those set forth in the Master Declaration are provided for Marble Ski Area Filing 2.

IN WITNESS WHEREOF, Marble Ski Area, Inc., has executed the foregoing Protective and Design Covenants and Supplemental Declarations on the day and year first above written.

MARBLE SKI AREA, INC.

By John Zakovich
President

ATTEST:

Leo J. May
Secretary

STATE OF COLORADO)
) ss.
COUNTY OF Douglas)

The foregoing was acknowledged before me this 19th day of June, A.D. 1971 by John P. Zakovich as the President and by Leo J. May as the Secretary of MARBLE SKI AREA, INC., a Colorado Corporation.

Witness my hand and official seal.

My commission expires: My Commission expires May 22, 1973

Ann Prudhood
Notary Public

ANN PRUDHOOD NOTARY PUBLIC STATE OF COLORADO

SUPPLEMENTAL DECLARATION

FOR

MARBLE SKI AREA

FILING 3

KNOW ALL MEN BY THESE PRESENTS: That this Supplemental Declaration is made this 19th day of June, 1971, by Marble Ski Area, Inc., a Colorado Corporation for all property within the subdivision known as Marble Ski Area Filing 3 as shown on the map thereof filed in the Office of the Clerk and Recorder of Gunnison County, Colorado as Document No. _____.

I. LAND OCCUPANCY

1.1 Applicability to Filing 3: All lots in Filing 3 shall be used for single family and multiple family dwellings exclusively as follows:

Single Family Lots: Lots 1 through 89 inclusive

Multiple Family Lots: Lots 90 through 106 inclusive

II. BUILDING LOCATION

2.1 Steep Slopes: The following lots have average slopes of thirty-five (35%) percent or greater and any building constructed thereon may be located within ten (10) feet of the front lot line as provided in Section 7.5.3 of the Master Declaration.

Lots: 37, 64, 66, 67, 68, 69, 70, 71

III. GROSS FLOOR AREA

3.1 Maximum Capacity: For purposes of gross floor area restrictions as described in Section 2.16 of the Master Declaration, the following maximum gross floor area capacities shall apply for Marble Ski Area Filing 3.

Lot No.	Maximum (Gross Floor Area) Capacity in Units
90	22
91	22
92	22
93	22
94	37
95	22
96	18
97	18
98	16
99	18
100	24
101	18
102	18
104	20
105	14
106	14

IV. ADDITIONAL PROVISIONS

4.1 Applicability to Filing 3: No additional provisions other than those set forth in this Supplemental Declaration and those set forth in the Master Declaration are provided for Marble Ski Area Filing 3.

IN WITNESS WHEREOF, Marble Ski Area, Inc., has executed the foregoing Protective and Design Covenants and Supplemental Declarations on the day and year first above written.

MARBLE SKI AREA, INC.

By _____
President

ATTEST:

_____
Secretary

STATE OF COLORADO)
) ss.
COUNTY OF Douglas)

The foregoing was acknowledged before me this 19th day of June, A.D. 1971 by John P. Zakovich as President and by Leo J. May as Secretary of MARBLE SKI AREA, INC., a Colorado corporation.

Witness my hand and official seal.

My commission expires: My Commission expires May 22, 1973

_____
Notary Public

NOTARY PUBLIC

SUPPLEMENTAL DECLARATION

FOR

MARBLE SKI AREA

FILING 4

KNOW ALL MEN BY THESE PRESENTS: That this Supplemental Declaration is made this 19th day of June, 1971, by Marble Ski Area, Inc., a Colorado Corporation for all property within the subdivision known as Marble Ski Area Filing 4 as shown on the map thereof filed in the Office of the Clerk and Recorder of Gunnison County, Colorado as Document No. _____.

I. LAND OCCUPANCY

1.1 Applicability to Filing 4: All lots in Filing 4 shall be used for single family and multiple family dwellings exclusively as follows:

Single Family Lots: Lots 1 through 50 inclusive

Multiple Family Lots: Lots 51 through 57 inclusive

II. BUILDING LOCATION

2.1 Steep Slopes: The following lots have average slopes of thirty-five (35%) percent or greater and any building constructed thereon may be located within ten (10) feet of the front lot line as provided in Section 7.5.3 of the Master Declaration.

Lots: 30, 32, 33, 34, 53, 54, 55, 56, 57

III. GROSS FLOOR AREA

3.1 Maximum Capacity: For the purposes of gross floor area restrictions, as described in Section 2.16 of the Master Declaration, the following maximum gross floor area capacities shall apply for Marble Ski Area, Filing 4.

Lot No.	Maximum (Gross Floor Area) Capacity in Units
51	18
52	18
53	16
54	16

Lot No.	Maximum (Gross Floor Area) Capacity in Units
55	16
56	16
57	16

IV. BUILDING SITES INSIDE ROAD SWITCHBACKS

4.1 Applicability to Filing 4: The following special regulations shall apply to those building sites located inside road switchbacks:

Lots 19, 20, 29
Maximum permitted gross floor area = 1,200 sq. ft.
Maximum height of dwelling shall be not more than 15 feet.

V. ADDITIONAL PROVISIONS

5.1 Applicability to Filing 4: No additional provisions other than those set forth in this Supplemental Declaration and those set forth in the Master Declaration are provided for Marble Ski Area Filing 4.

IN WITNESS WHEREOF, Marble Ski Area, Inc., has executed the foregoing Protective and Design Covenants and Supplemental Declarations on the day and year first above written.

MARBLE SKI AREA, INC.

By John Zakrzewski
President

ATTEST:

Leo J. May
Secretary

STATE OF COLORADO)
) ss.
COUNTY OF Douglas)

The foregoing was acknowledged before me this 19th day of June, A. D. 1971 by John V. Zakrzewski as President and by Leo J. May as Secretary of MARBLE SKI AREA, INC., a Colorado corporation.

Witness my hand and official seal.

My commission expires: My Commission expires May 22, 1973

Ina Truelloock
Notary Public

NOTARY PUBLIC STATE OF COLORADO

474588 03/25/1997 04:30P 560
1 of 10 R 0.00 D 0.00 N 0.00 GUNNISON COUNTY

GUNNISON COUNTY PLANNING COMMISSION
FINDING OF NO IMPACT

CERTIFICATION NO. 6 SERIES 1997

AN ACTION APPROVING LAND USE CHANGE APPLICATION NO. 1996-059
A LAND USE CHANGE PERMIT FOR A BOUNDARY LINE ADJUSTMENT ON
ON TRACT A AND TRACT EX1 MARBLE SKI AREA, FILING 1

WHEREAS, Tim & Alice O'Shea owners of TRACT A, MSA Filing 1, and Bleu Stroud Owner of TRACT EX1, MSA Filing 1 have made a joint application to reconfigure the common boundary between these lots as conveyed on Exhibit A; and,

WHEREAS, as part of the condition of approval both applicants were required to deed restrict these parcels to permanently abandoned those commercial uses (shopping center) allowed by the Marble Ski Area PUD approval, and this Certificate of Abandonment is noted as Exhibit B; and,

WHEREAS, the Town of Marble has approved this Boundary Line Adjustment during their Council meeting on January 1997; and,

WHEREAS, after a review of the relevant facts, the Gunnison County Planning Commission did, by motion on October 18, 1996, made the following findings and conditions of approval:

FINDINGS:

-- Tracts A and EX1, Marble Ski Are Filing 1, have been designated within the approved PUD as shopping center sites.

-- Portions of both Tracts A and EX1, Marble Ski Area Filing 1, have been annexed into the town of Marble and jurisdictional authority is confusing.

-- Geologic and Hydrologic Factors Governing Impacts of Development on the Crystal River Near Marble, Colorado, Gunnison County, Colorado noted that these sites are located on Slope Stability Areas III and IV.

-- The Division of Water Resources representative, Dwight Whitehead has noted that this boundary line adjustment will not hinder the issuance of well permits for single family dwellings.

-- The Marble Metro District has reviewed and approved this boundary line adjustment.

-- The applicants have agreed to abandon the present PUD designation through deed restriction.

-- There has been no determination whether or not the site

is physically capable of having two ISDS facilities, and there has been no consideration as to whether theses sites will be issued appropriate Count permits.

-- There are no conflicts with the County land use policies or design guidelines.

-- The Commission finds, given its review and these findings, that this application is classified as a No Impact.

DECISION:

1) Prior to signature of the Boundary Line Adjustment Plat by the Board of County Commissioners, the following items will need to be complete:

a) Approval of this action be granted by the Town of Marble and written notification of the approved be provided to Gunnison County.

b) Deed restriction language abandoning permanently the existing PUD land use designation H (shopping center), shall be reviewed and approved by the Gunnison County Attorney, and those deed restrictions be recorded in the records of the Gunnison County Clerk and Recorder.

2) Approval of this Boundary Adjustment does not insure or require Gunnison County to issue either ISDS or Building permits for either lot.

AND WHEREAS, the Board of Commissioners has directed that land use change permit applications which are found by the Planning Commission to be classified as No Impacts require no review nor approval by the Board of Commissioners;

NOW THEREFORE, Land Use Change application No. 1996-019 is approved as a development of No Impact, and so certified by the undersigned, and subject to the above cited conditions.

THIS CERTIFICATION AND THE PERMIT GRANTED HEREBY, shall not be effective unless and until a copy of this resolution is recorded in the Clerk and Recorder of Gunnison County.

/s/ Steven Westbay
Steven Westbay
Assistant Planning Director

ATTEST

Gunnison County Clerk and Recorder

474588 03/25/1997 04:30P 560
3 of 10 R 0.00 D 0.00 N 0.00 GUNNISON COUNTY

Exhibit B

CERTIFICATION OF ABANDONMENT OF P.U.D.

Timothy M. O'Shea and Alice L. O'Shea (collectively "O'Shea") owners of the land described as Tract A, Marble Ski Area Filing No. 1, Gunnison County, Colorado, now containing 8.19 acres more or less, which was originally platted as 8.19 acres more or less under the name Replat of Tract A and Tract EX1, Marble Ski Area, Filing No. 1, LUC 1996-019, and Bleu Stroud ("Stroud") owner of the land described as Tract EX1, Marble Ski Area Filing No. 1, Gunnison County, Colorado, now containing 3.40 acres more or less, which was originally platted as 3.40 acres more or less under the name Replat of Tract A and Tract EX1, Marble Ski Area, Filing No. 1, LUC 1996-019, state, certify and acknowledge as follows:

1. O'Shea and Stroud, with reference to their respective properties described above, certify and acknowledge that the existing P.U.D. land designation H (shopping center) is permanently abandoned.

2. O'Shea and Stroud certify and acknowledge that Tract A and Tract EX1 shall be utilized for residential purposes only.

3. This certification shall run with the above-described properties and shall bind the heirs, successors and assigns of O'Shea and Stroud.

Dated: 26 Feb 97 — Timothy M. O'Shea
Timothy M. O'Shea

Dated: Feb 26, 1997 — Alice L. O'Shea
Alice L. O'Shea

Dated: 3/6/97 — Bleu Stroud
Bleu Stroud

STATE OF COLORADO)
) ss.
COUNTY OF)

Subscribed, sworn to and acknowledged before me this 26th day of February, 1997, by Timothy M. O'Shea and Alice L. O'Shea.

Witness my hand and official seal.

My commission expires: 8/9/97

Jennifer Swenson
Notary Public

NOTARY PUBLIC STATE OF COLORADO

474588 03/25/1997 04:30P 560
4 of 10 R 0.00 D 0.00 N 0.00 GUNNISON COUNTY

STATE OF COLORADO)
) ss.
COUNTY OF Garfield)

Subscribed, sworn to and acknowledged before me this 6 day of March, 1997, by Blue Stone.

Witness my hand and official seal.

My commission expires: 10/1/97

NOTARY PUBLIC
KERRY HARRISON
STATE OF COLORADO

Kerry Harrison
Notary Public

474588 03/25/1997 04:30P 560
5 of 10 R 0.00 D 0.00 N 0.00 GUNNISON COUNTY

5

EPLAT OF TR
AREA, FILING N
GUNNISON

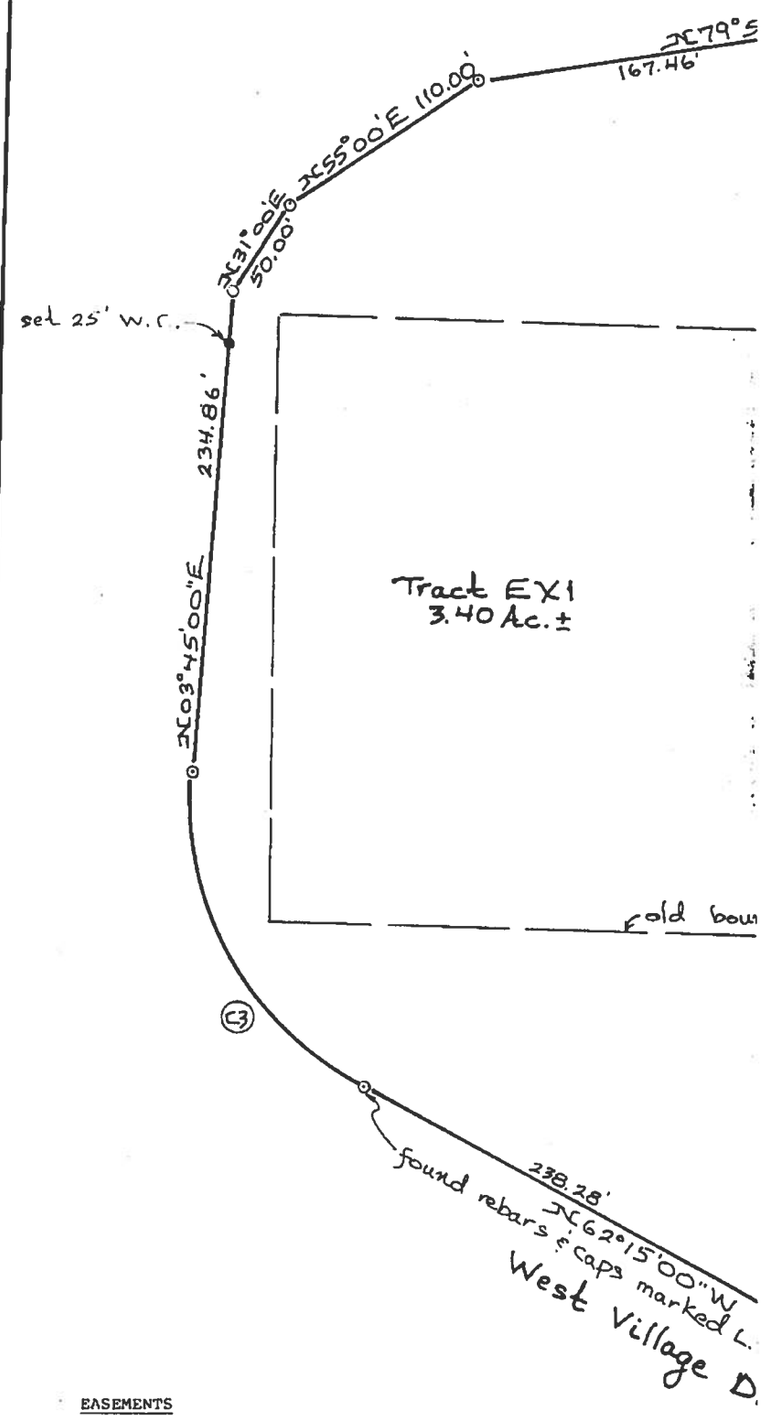

EASEMENTS

All back lot lines shall have a utility and drainage easement 10 feet in width and all side lot lines shall have a utility and and drainage easement 5 feet in width.

CURVE	DELTA ANGLE	RADIUS	ARC	TANGENT	CHORD	CHORI
C 1	75°10'29"	219.28'	287.71'	168.79'	267.51'	S :
C 2	12°33'59"	868.21'	190.42'	95.59'	190.04'	N (
C 3	66°00'00"	160.18'	184.51'	104.02'	174.48'	N :

6

OF TRACTS A AND EX1, MARBL
'LING NO. 1
JNISON COUNTY, COLORADO

474588 03/25/1997 04:30P 560
6 of 10 R 0.00 D 0.00 N 0.00 GUNNISON COUNTY

ity and drainage easement
nes shall have a utility and
h.

	TANGENT	CHORD	CHORD BEARING
.71'	168.79'	267.51'	S 52°46'13"W
.42'	95.59'	190.04'	N 68°32'00"W
.51'	104.02'	174.48'	N 29°15'00"W

474588 03/25/1997 04:30P 560
7 of 10 R 0.00 D 0.00 N 0.00 GUNNISON COUNTY

LE SKI

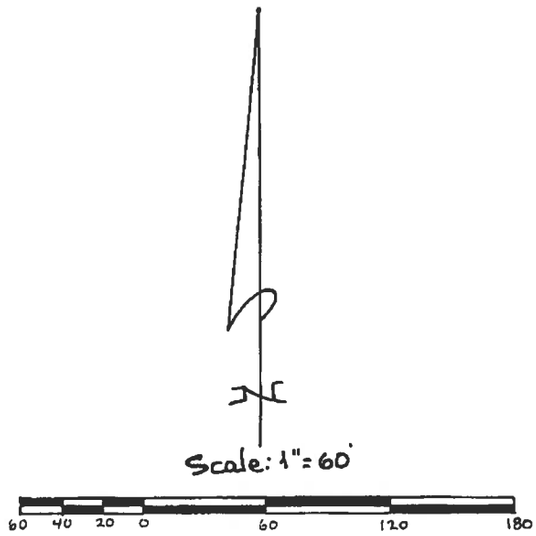

ge Drive

ATTORNEY'S OPINION

I, Thomas C. Hill, an attorney at law, duly licensed to practice in the State of Colorado, hereby certify that I have examined title to all lands herein dedicated and subdivided. Such title is held in the names of Timothy M. O'Shea, Alice L. O'Shea and Bleu Stroud and is free and clear of all liens, encumbrances, restrictions and reservations except as follows:

By: Thomas C. Hill
#2491
1-15-97

474588 03/25/1997 04:39P 580
8 of 10 R 0.00 D 0.00 N 0.00 GUNNISON COUNTY

8

CERTIFICATION OF DEDICATION AND OWNERSHIP

Timothy M. O'Shea and Alice L. O'Shea, being the owners of the land described as follows:

Tract A, Marble Ski Area Filing No. 1, Gunnison County, Colorado, now containing 8.19 acres more or less, which was originally platted as 8.19 acres more or less;

under the name Replat of Tract A and Tract EX1, Marble Ski Area, Filing No. 1, LUC 1996-019

have laid out, platted and subdivided the same as shown on this plat and do hereby dedicate to the public at large the streets, alleys, roads and other public areas as shown hereon and hereby dedicate those portions of land labeled as easements for the installation and maintenance of public utilities as shown hereon.

The existing P.U.D. land use designation H (shopping center) is permanently abandoned, and Tract A and Tract EX1 shall be utilized for residential purposes only.

In witness whereof Timothy M. O'Shea and Alice L. O'Shea have subscribed their names this 20 day of Dec, A.D., 1996.

By: Timothy M. O'Shea
Timothy M. O'Shea

Alice L. O'Shea
Alice L. O'Shea

STATE OF COLORADO)
Jefferson) ss.
COUNTY OF ~~GARFIELD~~)

The foregoing instrument was acknowledged before me this 20th day of December, A.D., 1996, by Timothy M. O'Shea and Alice L. O'Shea.

My Commission Expires: 8/9/97

My Address is: 21958 Platteau Cir.
Morrison, CO 80439

Witness my hand and seal

Jennifer Sherman (seal)
Notary Public

Seal

practice in the State of Colorado,
herein dedicated and subdivided.
, Alice L. O'Shea and Bleu Stroud
ictions and reservations except as

By: Thomas C. Hill
Thomas C. Hill
#2491
1-15-97

CERTIFICATION OF DEDICATION AND OWNERSHIP

Bleu Stroud, being the owner of the land described as follows:

Tract EX1, Marble Ski Area Filing No. 1, Gunnison County, Colorado, now containing 3.40 acres more or less, which was originally platted as 3.40 acres more or less;

under the name Replat of Tract A and Tract EX1, Marble Ski Area, Filing No. 1, LUC 1996-019

has laid out, platted and subdivided the same as shown on this plat and do hereby dedicate to the public at large the streets, alleys, roads and other public areas as shown hereon and hereby dedicate those portions of land labeled as easements for the installation and maintenance of public utilities as shown hereon.

The existing P.U.D. land use designation H (shopping center) is permanently abandoned, and Tract A and Tract EX1 shall be utilized for residential purposes only.

In witness whereof Bleu Stroud has subscribed her name this 16th day of January, A.D., 1997.

By: Bleu Stroud
Bleu Stroud

STATE OF COLORADO)
) ss.
COUNTY OF GARFIELD)

The foregoing instrument was acknowledged before me this 16th day of January, A.D., 1997, by Bleu Stroud.

My Commission Expires: 8/22/98

My Address is: 0304 Hwy 133
Carbondale, CO 81623

Witness my hand and seal

Antonia Palmatto (seal)
Notary Public

Seal

C 2	12°33'59"	868.21'	190.42'	95.59'	267.51'
C 3	66°00'00"	160.18'	184.51'	104.02'	190.04'
					174.48'

LINE	BEARING	DISTANCE
L 1	S 15°11'00"W	46.03'
L 2	S 29°22'04"E	35.89'
L 3	S 14°24'55"W	40.02'
L 4	S 01°41'28"W	40.05

• - set rebar & cap marked L.S. 14111

9

474588 03/25/1997 04:30P 560
9 of 10 R 0.00 D 0.00 N 0.00 GUNNISON COUNTY

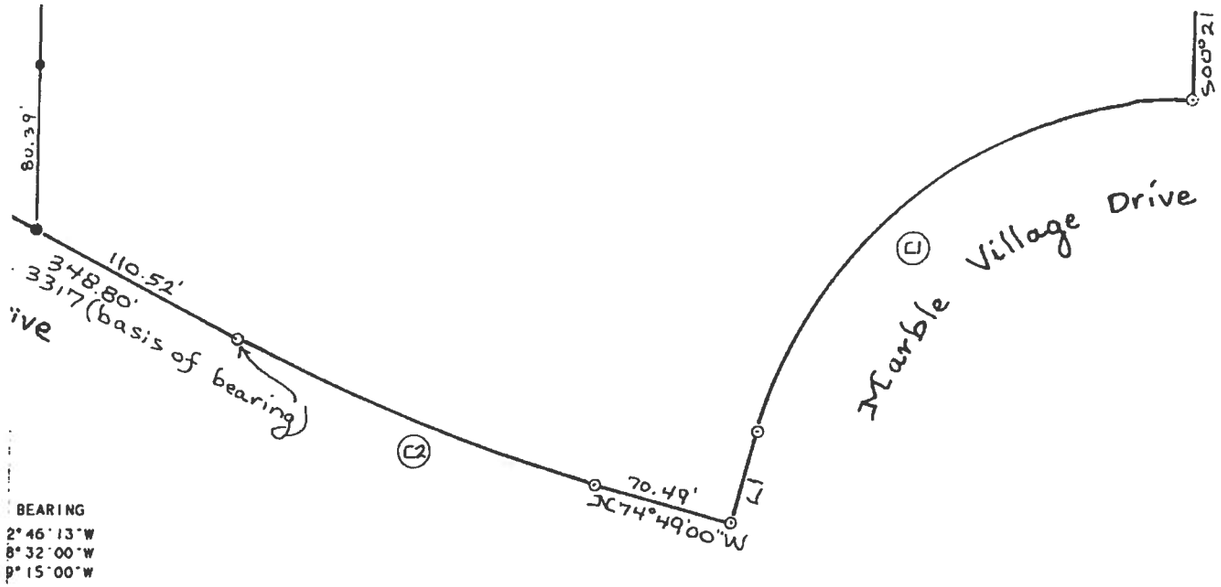

474588 03/25/1997 04:30P 588
10 of 10 R 0.00 D 0.00 N 0.00 GUNNISON COUNTY

10

Vicinity Map
Scale: 1"=1000'

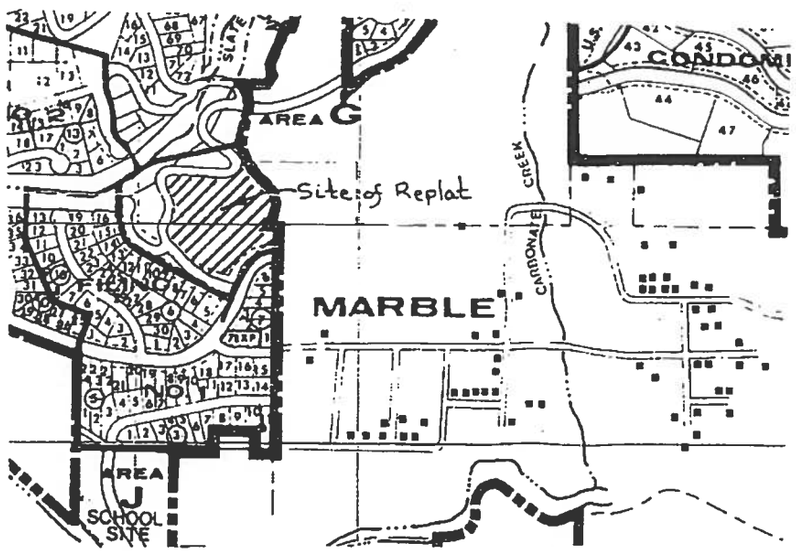

SURVEYOR'S CERTIFICATE

I, Sydney Lincicome, do hereby certify that I am a registered land
the laws of the State of Colorado that this plat is a true, correct a
Replat of Tract A and Tract EX1, Marble Ski Area, Filing No.
dedicated and shown hereon, that such plat was made from an
property by me and correctly show the location and dimension
corrected plat.

In witness whereof I have set my hand and seal this 11th
A.D, 1996.

Sydney
Sydney Lincicor

475046 04/17/1997 04:06P 560
1 of 1 R 0.00 D 0.00 N 0.00 GUNNISON COUNTY

This corrected page one(1) replace page one (1) of the orignally recorded doucument at Reception #474588 on 3/25/97

GUNNISON COUNTY PLANNING COMMISSION
FINDING OF NO IMPACT

CERTIFICATION 1997 NO. 6 SERIES

AN ACTION APPROVING LAND USE CHANGE APPLICATION NO. 1996-019
A LAND USE CHANGE PERMIT FOR A BOUNDARY LINE ADJUSTMENT ON
ON TRACT A AND TRACT EX1 MARBLE SKI AREA, FILING 1

WHEREAS, Tim & Alice O'Shea owners of TRACT A, MSA Filing 1, and Bleu Stroud Owner of TRACT EX1, MSA Filing 1 have made a joint application to reconfigure the common boundary between these lots as conveyed on Exhibit A; and,

WHEREAS, as part of the condition of approval both applicants were required to deed restrict these parcels to permanently abandoned those commercial uses (shopping center) allowed by the Marble Ski Area PUD approval, and this Certificate of Abandonment is noted as Exhibit B; and,

WHEREAS, the Town of Marble has approved this Boundary Line Adjustment during their Council meeting on January 1997; and,

WHEREAS, after a review of the relevant facts, the Gunnison County Planning Commission did, by motion on October 18, 1996, made the following findings and conditions of approval:

FINDINGS:

-- Tracts A and EX1, Marble Ski Are Filing 1, have been designated within the approved PUD as shopping center sites.

-- Portions of both Tracts A and EX1, Marble Ski Area Filing 1, have been annexed into the town of Marble and jurisdictional authority is confusing.

-- Geologic and Hydrologic Factors Governing Impacts of Development on the Crystal River Near Marble, Colorado, Gunnison County, Colorado noted that these sites are located on Slope Stability Areas III and IV.

-- The Division of Water Resources representative, Dwight Whitehead has noted that this boundary line adjustment will not hinder the issuance of well permits for single family dwellings.

-- The Marble Metro District has reviewed and approved this boundary line adjustment.

485392 07/27/1998 01:12P 289
1 of 3 R 16.00 D 0.00 N 0.00 Gunnison County

TOWN OF MARBLE, COLORADO
ORDINANCE NO. 5
SERIES OF 1998

AN ORDINANCE OF THE TOWN OF MARBLE, COLORADO, ANNEXING TO THE TOWN CERTAIN REAL PROPERTY KNOWN AS THE VAN SCHAACK ANNEXATION TO THE TOWN OF MARBLE.

WHEREAS, on March 11, 1998, there was filed with the Town Clerk of the Town of Marble a Petition requesting that the Board of Trustees of the Town of Marble, Colorado (hereinafter "Town Board"), commence proceedings to annex to the Town a certain unincorporated parcel of land located in Gunnison County, Colorado, which parcel is known as the Van Schaack Annexation to the Town of Marble and which parcel is described in Exhibit A, attached hereto and incorporated herein by this reference; and

WHEREAS, pursuant to C.R.S. §331-12-108, the Town Board by Resolution No. 5, Series of 1998, specified the Town Board would hold a hearing on the proposed annexation at a special meeting on May 30, 1998; and

WHEREAS, pursuant to C.R.S. §31-12-108 to - 110, the Town Board on May 30, 1998, and continued to June 15, 1998, held a duly-noticed public hearing to consider the proposed annexation; and

WHEREAS, notice of such hearing was published on April 16, 23,30 and May 7, in the Valley Journal Newspaper; and

WHEREAS, the Town Board by Resolution No. 5, Series of 1998, set forth its Findings of Fact, Determinations and Conclusions with regard to the proposed annexation; and

WHEREAS, the Town Board by Resolution No. 5, Series of 1998, determined that the proposed annexation qualifies for annexation by ordinance to the Town.

NOW, THEREFORE, the Board of Trustees of the Town of Marble, Colorado ordains

1. The annexation to the Town of the real property described in Exhibit A is hereby approved, and such real property, known as the Van Schaack, is hereby made a part of and annexed to the Town of Marble.

2. Within ten (10) days after final publication of this Ordinance, the Town Clerk of the Town of Marble, Colorado, on behalf of the Town shall:

A. File one (1) copy of the Annexation Map and the original of this Annexation Ordinance in the office of the Town Clerk of the Town of Marble, Colorado;

B. File for recording two (2) certified copies of this Annexation Ordinance and two (2) copies of the Annexation Map, containing a legal description of the annexation parcel, with the County Clerk and Recorder of Gunnison County, Colorado, with directions to the Clerk and Recorder to file one certified copy of this Annexation Ordinance and one copy of the Annexation Map with the Division of Local
Government of the Department of Local Affairs of the State of Colorado;

C. File one certified copy of this Annexation Ordinance and one copy of the Annexation Map in the office of the County Assessor of Gunnison County, Colorado.

Read, adopted, and ordered published by title by a vote of 3 to 1 this 15th day of June, 1998.

TOWN OF MARBLE

By _____

Bob Leone, Mayor

ATTEST:

_____
Clerk

485392 07/27/1998 01:12P 289
3 of 3 R 16.00 D 0.00 N 0.00 Gunnison County

Exhibit A
Legal Description: Annexation Parcel

Replat of Tract EX1, Marble Ski Area Filing Number 1, LUC 1996-019

485392 07/27/1998 01:12P 289
1 of 3 R 16.00 D 0.00 N 0.00 Gunnison County

TOWN OF MARBLE, COLORADO
ORDINANCE NO. 5
SERIES OF 1998

AN ORDINANCE OF THE TOWN OF MARBLE, COLORADO, ANNEXING TO THE TOWN CERTAIN REAL PROPERTY KNOWN AS THE VAN SCHAACK ANNEXATION TO THE TOWN OF MARBLE.

WHEREAS, on March 11, 1998, there was filed with the Town Clerk of the Town of Marble a Petition requesting that the Board of Trustees of the Town of Marble, Colorado (hereinafter "Town Board"), commence proceedings to annex to the Town a certain unincorporated parcel of land located in Gunnison County, Colorado, which parcel is known as the Van Schaack Annexation to the Town of Marble and which parcel is described in Exhibit A, attached hereto and incorporated herein by this reference; and

WHEREAS, pursuant to C.R.S. §331-12-108, the Town Board by Resolution No. 5, Series of 1998, specified the Town Board would hold a hearing on the proposed annexation at a special meeting on May 30, 1998; and

WHEREAS, pursuant to C.R.S. §31-12-108 to - 110, the Town Board on May 30, 1998, and continued to June 15, 1998, held a duly-noticed public hearing to consider the proposed annexation; and

WHEREAS, notice of such hearing was published on April 16, 23,30 and May 7, in the Valley Journal Newspaper; and

WHEREAS, the Town Board by Resolution No. 5, Series of 1998, set forth its Findings of Fact, Determinations and Conclusions with regard to the proposed annexation; and

WHEREAS, the Town Board by Resolution No. 5, Series of 1998, determined that the proposed annexation qualifies for annexation by ordinance to the Town.

NOW, THEREFORE, the Board of Trustees of the Town of Marble, Colorado ordains

1. The annexation to the Town of the real property described in Exhibit A is hereby approved, and such real property, known as the Van Schaack, is hereby made a part of and annexed to the Town of Marble.

2. Within ten (10) days after final publication of this Ordinance, the Town Clerk of the Town of Marble, Colorado, on behalf of the Town shall:

A. File one (1) copy of the Annexation Map and the original of this Annexation Ordinance in the office of the Town Clerk of the Town of Marble, Colorado;

B. File for recording two (2) certified copies of this Annexation Ordinance and two (2) copies of the Annexation Map, containing a legal description of the annexation parcel, with the County Clerk and Recorder of Gunnison County, Colorado, with directions to the Clerk and Recorder to file one certified copy of this Annexation Ordinance and one copy of the Annexation Map with the Division of Local
Government of the Department of Local Affairs of the State of Colorado;

C. File one certified copy of this Annexation Ordinance and one copy of the Annexation Map in the office of the County Assessor of Gunnison County, Colorado.

Read, adopted, and ordered published by title by a vote of 3 to 1 this 15th day of June, 1998.

TOWN OF MARBLE

By _____

Bob Leone, Mayor

ATTEST:

_____
Clerk

485392 07/27/1998 01:12P 289
3 of 3 R 16.00 D 0.00 N 0.00 Gunnison County

Exhibit A
Legal Description: Annexation Parcel

Replat of Tract EX1, Marble Ski Area Filing Number 1, LUC 1996-019

485393 07/27/1998 01:17P 289
1 of 3 R 16.00 D 0.00 N 0.00 Gunnison County

TOWN OF MARBLE, COLORADO
ORDINANCE NO. 6
SERIES OF 1998

AN ORDINANCE OF THE TOWN OF MARBLE, COLORADO, ZONING AS R-1, LOW DENSITY RESIDENTIAL, CERTAIN REAL PROPERTY KNOWN AS THE VAN SCHAACK ANNEXATION TO THE TOWN OF MARBLE

WHEREAS, on March 11, 1998, there was filed with the Town Clerk of the Town of Marble, Colorado (hereinafter "Town") a Petition requesting that the Board of Trustee's of the Town (hereinafter "Town Board") commence proceedings to annex to the Town a certain unincorporated tract of land located in Gunnison County, Colorado, and described in Exhibit A, attached hereto and incorporated herein by this reference (hereinafter "the Property"); and

WHEREAS, by Resolution No. 5, Series of 1998, the Town Board found the Petition to be in substantial compliance with the requirements of the Municipal Annexation Act of 1965, C.R.S. §31-12-107(I), as amended; and

WHEREAS, the Town of Marble Planning and Zoning Commission at a duly-noticed public hearing held March 16, 1998 considered an application from the Property owner to zone Lot 1 of the Property as R-1, Low Density Residential, and;

WHEREAS, the Commission recommended that the Town Board zone Lot 1 of the Property as R-1, Low Density Residential; and

WHEREAS, the Town Board on May 30, 1998, and continued to June 15, 1998 considered the application to zone the property; and

WHEREAS, June 15, 1998, the Town Board passed Ordinance No. 5, Series of 1998, to annex the Property to the Town; and

WHEREAS, the Town Board finds and determines that the public hearing on such zoning application is now complete; and

WHEREAS, the Town Planning and Zoning Commission and the Town Board have held duly-noticed and duly-continued public hearings on such zoning application.

NOW, THEREFORE, The Board of Trustees of the Town of Marble, Colorado, ordains

1. The Property described on Exhibit A, attached hereto and incorporated herein by this reference, and commonly known as the Van Schaack Annexation to the Town of Marble, is hereby zoned R-1, Low Density Residential.

2. By the adoption of this Ordinance, the Town has brought the Property under the Town's Zoning Ordinance and has authorized the amendment of the Town Zone District Map to include the Property, which map is currently on file at the Marble Town Hall, in accordance with Colorado Revised Statutes.

3. The Town Clerk shall record a certified copy of this Ordinance with the Gunnison County Clerk and Recorder. Town staff is further directed to comply with all provisions of the Colorado Revised Statutes and Town ordinances to implement the provisions of this Ordinance.

Read, adopted and ordered published by a vote of 4 to 0 this 15th day of May, 1998

TOWN OF MARBLE, COLORADO

By: _____

Bob Leone, Mayor

ATTEST:

_____
Clerk

485393 07/27/1996 01:17P 289
3 of 3 R 16.00 D 0.00 N 0.00 Gunnison County

Exhibit A
Legal Description: Annexation Parcel

Replat of Tract EX1, Marble Ski Area Filing Number 1, LUC 1996-019

485394 07/27/1998 01:18P 289
1 of 2 R 11.00 D 0.00 N 0.00 Gunnison County

TOWN OF MARBLE, COLORADO
ORDINANCE NO. 9
SERIES OF 1998

AN ORDINANCE OF THE TOWN OF MARBLE, COLORADO, APPROVING A SUBDIVISION FINAL PLAT FOR THE O'SHEA SUBDIVISION WITHIN THE TOWN OF MARBLE

WHERAS, on March 2, 1998, there was filed with the Town of Marble an application for approval of a Subdivision Final Plat for Property to be annexed to and located in the Town of Marble and further described on Exhibit A, attached hereto and incorporated herein by this reference; and

WHEREAS, the Town of Marble Planning and Zoning Commission, at a duly-noticed public hearing held March 16, 1998, recommended approval of the Subdivision Final Plat for the Property; and

WHEREAS, the Town Board of Trustees on April 6, 1998, completed its review of the O'Shea Subdivision Final Plat for the Property.

WHEREAS, on June 15, 1998, the Town Board of Trustees passed Ordinance No. 3, Series of 1998, to annex the Property to the Town; and

NOW, THEREFORE, THE COUNCIL OF THE TOWN OF MARBLE, COLORADO, ORDAINS THAT:

1. The Town Board incorporates the foregoing recitals as findings by the Town Board

2. That certain Subdivision Final Plat for the Property described on Exhibit A, attached hereto and incorporated herein by this reference, and known as the O'Shea Subdivision in the Town of Marble, is hereby approved. A true and correct copy of such Agreement and the Final Plat have been deposited with the Town Clerk and are available for public inspection at the Clerk's office.

3. The Mayor of the Town of Marble and Chair of the Marble Planning and Zoning Commission are hereby authorized to indicate the Town Board of Trustees' approval of the O'Shea Subdivision Final Plat by signing two reproducible copies of such Final Plat.

4. The Town Clerk is directed to file one copy of the Subdivision Final Plat and the original of this Ordinance, in the office of Town Clerk.

5. The Town Clerk is hereby further directed to record this Ordinance, the Subdivision Final Plat, the Agreement and any other associated documents in the office of the

485394 07/27/1998 01:18P 289
2 of 2 R 11.00 D 0.00 N 0.00 Gunnison County

Clerk and Recorder of Gunnison County, and to file one certified copy of the Subdivision Final Plat and this Ordinance with the Gunnison County Assessor.

Read, adopted and ordered published by a vote of 4 to 0 this 15th day of June, 1998.

TOWN OF MARBLE, COLORADO

By:

Mayor

ATTEST:

Town Clerk

SLOW GROOVIN HOLDING LLC
101 W 1ST ST
MARBLE, CO 81623

82-123/1070

1006

8/24/16
date

Pay to the order of Wright Water Engineers Inc $ 2500.00

twenty five hundred dollars

Security Features Included. Details on Back.

ANB Bank
www.anbbank.com
Telephone 1-866-433-0282

for Deposit for water line

MP

⑆107001232⑆ 2800002997⑈ 01006

WRIGHT WATER ENGINEERS, INC.
PROJECT AGREEMENT

Project Name: Marble – Ryan Vinciguerra Water Line Extension

Project Number: 931-122.200

Project Manager: Wayne Lorenz

Client Name:

Billing Address:

Address:

Telephone:

Fax:

Attention: John Williams

Email Address: thetucsonwilliamsfamily@gmail.com

Scope of Services: (X) Attachment A, proposal dated: 7/27/16 ***Or: ( ) as stated as follows:***

Prior to commencement of work, a retainer of $ 2,500 will be received to be credited against the final billing. Client shall compensate Wright Water Engineers, Inc. monthly for services and expenses as set forth in the attached **Schedule of Hourly Rates (Schedule A).**

7,000 (−) 1750 = 5250 RV

The total invoiced amount shall not exceed by more than 10% the estimated professional fee of $ ~~7,000~~ plus expenses without further negotiation and further written agreement between Wright Water Engineers, Inc. and the Client. Should work beyond that described in the Scope of Services be required, it will be paid for as extra work at a cost to be agreed upon prior to commencement of the additional work. If Wright Water Engineers, Inc. hires an attorney to collect any money due it under this Agreement, Client shall pay Wright Water Engineers, Inc. all reasonable attorney's fees and costs that it incurs in that collection effort.

Acceptance by Client:

For: **Wright Water Engineers, Inc.**

Date:

By:

Signature

Signature

(Print name and title)

(Print name and title)

Acceptance by Agent of Client:

The undersigned represents and warrants that he is the duly appointed and authorized agent of the Client and that he is authorized by the Client to enter into this Agreement, in the amount specified, on behalf of the Client. However, the undersigned agrees that if the Client does not pay Wright Water Engineers, Inc. the monies due it, when due, under this Agreement that the undersigned will guarantee that obligation by promptly making payment to Wright Water Engineers, Inc., in full, of the unpaid balance due Wright Water Engineers, Inc. under this Agreement.

By: Ryan Vinciguerra

Signature

(Print name)

MARBLE WATER COMPANY

VINCIGUERRA WATERLINE EXTENSION

GUNNISON COUNTY, COLORADO

LOCATION MAP

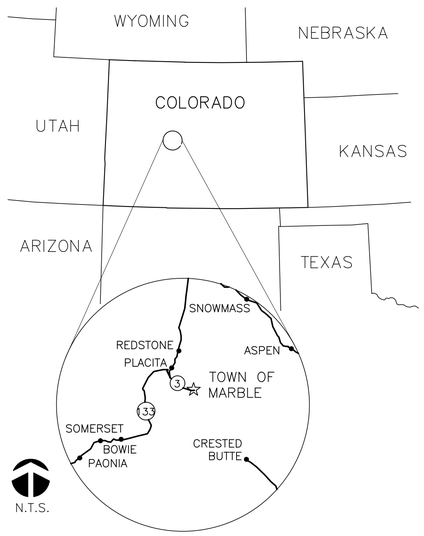

PROJECT LOCATION MAP

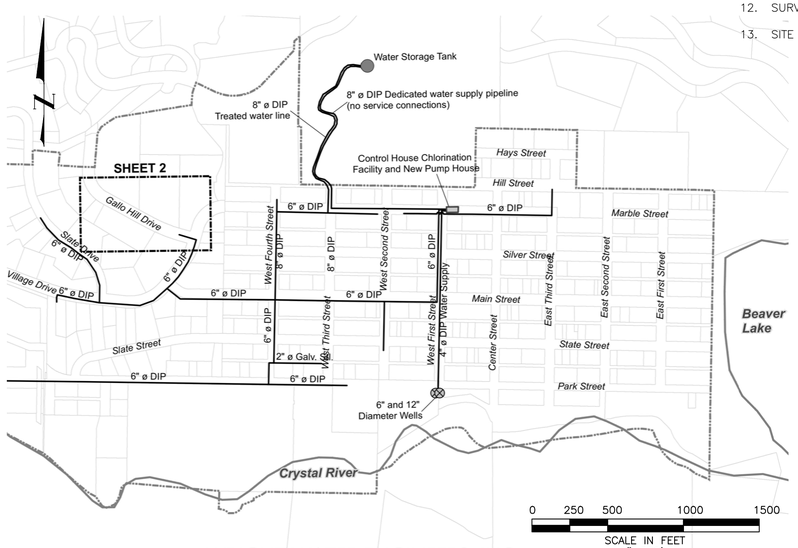

GENERAL NOTES

1. ALL CONSTRUCTION SHALL BE IN ACCORDANCE WITH THE PLANS AND SPECIFICATIONS, MARBLE WATER COMPANY, TOWN OF MARBLE, AND GUNNISON COUNTY REQUIREMENTS. WHERE DISCREPANCIES EXIST, THE MOST STRINGENT CRITERIA SHALL BE ADHERED TO.
2. AT LEAST FIVE (5) DAYS PRIOR TO THE START OF CONSTRUCTION, A PRE-CONSTRUCTION MEETING WILL BE HELD AND ATTENDED BY THE CONTRACTOR AND REPRESENTATIVES OF OTHER APPROVING AGENCIES. IT WILL BE THE RESPONSIBILITY OF THE CONTRACTOR TO CONTACT THE ENGINEER AND ALL PROPER AUTHORITIES.
3. THE CONTRACTOR SHALL BE RESPONSIBLE FOR:
   A. CONTRACTOR SHALL OBTAIN AT HIS OWN EXPENSE, ALL PERMITS AND LICENSES WHICH ARE NECESSARY TO PERFORM THE PROPOSED WORK.
   B. IN CASE OF AN EMERGENCY AFTER WORKING HOURS, CALL THE OWNER'S REPRESENTATIVE'S OFFICE.
4. THE CONTRACTOR SHALL NOTIFY THE OWNER'S ENGINEER (303/480-1700) AND THE PROJECT INSPECTOR AT LEAST 48 HOURS PRIOR TO THE START OF CONSTRUCTION. ALL WORK SHALL BE INSPECTED AND APPROVED BY OWNER OF THE OWNER'S REPRESENTATIVES.
5. ALL MATERIALS, CONSTRUCTION, AND TESTS SHALL BE IN ACCORDANCE WITH THE MORE STRINGENT OF THE CONTRACT DOCUMENT CONSTRUCTION SPECIFICATIONS AND/OR THE MARBLE WATER COMPANY REQUIREMENTS AS DETERMINED BY THE OWNER'S REPRESENTATIVE.
6. THE CONTRACTOR SHALL CONTACT ALL APPROPRIATE UTILITY COMPANIES AND CITY, COUNTY, OR OTHER INSPECTORS PRIOR TO THE BEGINNING OF ANY CONSTRUCTION. CONTRACTOR SHALL BE RESPONSIBLE FOR THE LOCATION (INCLUDING DEPTHS) OF ANY EXISTING UTILITIES. ALL EXISTING UTILITIES SHALL BE PROTECTED FROM DAMAGE BY THE CONTRACTOR. DAMAGED UTILITIES SHALL BE REPAIRED BY THE CONTRACTOR AT HIS OWN EXPENSE.
7. ALL ITEMS SHOWN ON THE PLANS AS EXISTING ARE SHOWN IN APPROXIMATE LOCATIONS ONLY. THE ACTUAL LOCATION MAY VARY FROM THE PLANS, ESPECIALLY IN THE CASE OF UTILITIES. WHENEVER CONTRACTOR DISCOVERS A DISCREPANCY IN LOCATIONS, HE SHALL CONTACT ENGINEER IMMEDIATELY.
8. THE CONTRACTOR SHALL BE RESPONSIBLE FOR REMOVING ANY GROUNDWATER ENCOUNTERED DURING THE CONSTRUCTION OF ANY PORTION OF THIS PROJECT AND OBTAINING A CONSTRUCTION DEWATERING PERMIT. GROUNDWATER SHALL BE PUMPED, PIPED, REMOVED AND DISPOSED OF IN A MANNER WHICH DOES NOT CAUSE FLOODING OF EXISTING STREETS NOR EROSION ON ABUTTING PROPERTIES IN ORDER TO CONSTRUCT THE IMPROVEMENTS SHOWN ON THESE PLANS. NO CONCRETE SHALL BE PLACED WHERE GROUNDWATER IS VISIBLE OR UNTIL THE GROUNDWATER TABLE HAS BEEN LOWERED BELOW THE PROPOSED IMPROVEMENTS. ANY UNSTABLE AREAS, AS A RESULT OF GROUNDWATER, ENCOUNTERED DURING THE CONSTRUCTION OF THE PROPOSED IMPROVEMENTS, SHALL BE STABILIZED AS AGREED UPON BY THE CONTRACTOR, AND THE DESIGN ENGINEER AT THE TIME OF THEIR OCCURRENCE.
9. THE CONTRACTOR SHALL BE RESPONSIBLE FOR REMOVING AND REPLACING ANY EXISTING SIGNS, STRUCTURES, FENCES, ETC. ENCOUNTERED ON THE JOB AND RESTORING THEM TO THEIR ORIGINAL CONDITION.
10. ALL ELEVATIONS SHOWN ARE TO TOP OF GROUND EXCEPT WHEN OTHERWISE SPECIFICALLY NOTED.
11. THE CONTRACTOR SHALL HAVE IN HIS POSSESSION AT ALL TIMES ONE (1) SIGNED COPY OF THE APPROVED PLANS.
12. SURVEYING BY SOPRIS ENGINEERING. LLC.
13. SITE BENCHMARK(S) ARE AS NOTED ON THE SITE PLAN.

CALL UTILITY NOTIFICATION CENTER OF COLORADO
1-800-922-1987
CALL 3-BUSINESS DAYS IN ADVANCE BEFORE YOU DIG, GRADE, OR EXCAVATE FOR THE MARKING OF UNDERGROUND MEMBER UTILITIES

CONTACT INFORMATION

WRIGHT WATER ENGINEERS, INC. (303) 480-1700

MARBLE WATER COMPANY (970) 963-1502

DRAWING INDEX

SHEET	TITLE
1	COVER SHEET, NOTES, AND DRAWING INDEX
2	SITE PLAN
3	DETAILS SHEET 1
4	DETAILS SHEET 2

GENERAL NOTES - WATER

1. THE LOCATION OF ALL EXISTING UNDERGROUND UTILITIES IS UNKNOWN. NOT ALL UTILITIES MAY BE SHOWN ON THE PLANS AND THE LOCATION OF THE UTILITIES SHOWN IS APPROXIMATE. THE CONTRACTOR SHALL DETERMINE THE EXACT LOCATION OF ALL EXISTING UTILITIES BEFORE COMMENCING WORK. THE CONTRACTOR SHALL BE FULLY AND SOLELY RESPONSIBLE FOR ANY AND ALL DAMAGES AND COSTS, WHICH MIGHT BE OCCASIONED BY HIS FAILURE TO EXACTLY LOCATE AND PRESERVE ANY AND ALL UTILITIES.
2. THE CONTRACTOR SHALL BE RESPONSIBLE FOR THE FOLLOWING:
   A) PROVIDING THE OWNER'S REPRESENTATIVE WITH AN "AS CONSTRUCTED" RED-LINED SET OF PRINTS AFTER COMPLETION OF THE PROJECT. ALL UTILITIES ENCOUNTERED DURING CONSTRUCTION SHALL BE STATIONED AND SHOWN ACCURATELY ON THE PLANS BY THE CONTRACTOR. ALL COORDINATES SHALL BE SHOWN ON THE "AS CONSTRUCTED" PLANS SUBMITTED TO THE OWNER'S REPRESENTATIVE,
   B) ALL LIGHTS, SIGNS, BARRICADES, FLAG MEN, OR OTHER DEVICES NECESSARY TO PROVIDE FOR PUBLIC SAFETY IN ACCORDANCE WITH LOCAL, STATE, AND FEDERAL REGULATIONS,
   C) JOBSITE CONDITIONS AT ALL TIMES,
   D) REMOVING AND REPLACING ANY EXISTING SIGNS, STRUCTURES, FENCES, ETC., ENCOUNTERED ON THE JOB AND RESTORING THEM TO THEIR ORIGINAL CONDITION.
3. CONSTRUCTION ACTIVITIES SHALL BE LIMITED TO STREET RIGHT-OF-WAY WITHIN TOWN LIMITS AND WITHIN A 20-FOOT WIDE CORRIDOR ALONG THE PIPELINE ALIGNMENT OUTSIDE THE RIGHT-OF-WAY.
4. ALL CONSTRUCTION ACTIVITIES SHALL BE COORDINATED WITH MARBLE WATER COMPANY OPERATIONS STAFF.
5. UNLESS OTHERWISE NOTED, ALL WATER MAINS SHALL BE DUCTILE IRON PIPE CLASS 52 WATER PIPE WITH PUSH-ON SINGLE GASKET TYPE JOINTS (AWWA C111). ALL DUCTILE IRON PIPE SHALL BE WRAPPED WITH AN 8 MIL MINIMUM THICKNESS OF POLYETHYLENE MATERIAL PER AWWA STANDARD C105. WHEN PIPE SLOPES EXCEED 18%, THE WATERLINE SHALL BE RESTRAINED USING U.S. PIPE TR FLEX PIPE AND FITTINGS OR APPROVED EQUAL.
6. THERE SHALL BE A MINIMUM COVER OF 7 FEET OVER ALL UNINSULATED WATER MAINS AND SERVICES AND A MINIMUM COVER OF 6 FEET OVER INSULATED WATER MAINS AND SERVICES. WATER MAINS WITH LESS THAN 7 FEET OF COVER SHALL BE INSULATED FOR THE FULL TRENCH WIDTH WITH 2 INCHES OF DOW BLUE HI-60 OR APPROVED EQUAL.
7. ALL BENDS, FITTINGS, AND VALVES SHALL BE CONSTRUCTED WITH THRUST BLOCKS AND JOINT RESTRAINT (MECHANICAL JOINTS OR RODDING).
8. ALL BENDS, TEES, FIRE HYDRANTS, BLOW-OFFS, AND PLUGS AT DEAD END MAINS SHALL BE PROTECTED FROM THRUST BY USING A MINIMUM OF 3000 PSI (28-DAY COMPRESSIVE STRENGTH) CONCRETE THRUST BLOCKS PER THE DETAIL SHEET. BAGGED PREMIX CONCRETE SHALL NOT BE USED.
9. ALL WATER PIPELINE SHALL MAINTAIN AT LEAST THE MINIMUM RADIUS RECOMMENDED BY THE MANUFACTURER, AND SHALL BE REVIEWED BY THE ENGINEER. PIPE LAID WITH A RADIUS SMALLER THAN THAT RECOMMENDED BY THE MANUFACTURER SHALL USE HIGH DEFLECTION COUPLINGS AND MUST BE APPROVED BY THE ENGINEER.
10. TRENCH WIDTH AT THE TOP OF THE BELL SHALL NOT EXCEED 24 INCHES PLUS THE LARGEST OUTSIDE DIAMETER OF THE PIPE.
11. THE CONTRACTOR SHALL INFORM THE OWNER OR OWNER'S REPRESENTATIVE 24 HOURS IN ADVANCE WHEN A TRENCH WILL BE READY FOR COMPACTION TESTING. THE OWNER SHALL HAVE A GEOTECHNICAL ENGINEER PERFORM THE COMPACTION TEST AT NO COST TO THE CONTRACTOR.
12. CHLORINATION AND FLUSHING: ALL WATER MAINS SHALL BE INSTALLED AND CHLORINATED PER AWWA C-651 "DISINFECTING WATER MAINS" AND THE CONTRACT DOCUMENT CONSTRUCTION SPECIFICATIONS. CHLORINATED WATER SHALL NOT BE DISCHARGED DIRECTLY INTO WETLANDS, STREAMS OR RIVERS.
13. HYDROSTATIC TESTING AND DISINFECTING: ALL WATER MAINS SHALL BE TESTED, DISINFECTED AND FLUSHED. ALL PIPE SHALL BE FIELD PRESSURE TESTED PER THE CONTRACT DOCUMENT CONSTRUCTION SPECIFICATIONS. ALL TESTS SHALL BE DONE IN THE PRESENCE OF THE UTILITY'S REPRESENTATIVE AND TO HIS SATISFACTION. ALLOWABLE LEAKAGE FOR EACH SECTION OF PIPE BETWEEN LINE VALVES SHALL NOT EXCEED THE LEAKAGE RATE SET FORTH IN THE CONTRACT DOCUMENT CONSTRUCTION SPECIFICATIONS.
14. THE CONTRACTOR SHALL BE RESPONSIBLE FOR OBTAINING THE CHLORINE AND BACTERIA TEST. THE CONTRACTOR SHALL NOTIFY THE OWNER 48 HOURS PRIOR TO DESIRED TEST TIME.
15. THE EXISTING WATER MAINS AND THE EXISTING FIRE HYDRANTS SHALL REMAIN IN SERVICE DURING THE NEW LINE CONSTRUCTION.
16. ALL VALVE BOXES SHALL BE BEDDED WITH A MINIMUM OF $\frac{1}{3}$ CUBIC YARDS OF $\frac{3}{4}$-INCH CRUSHED ROCK.
17. ALL WATER MAINS SHALL BE REQUIRED TO HAVE ELECTRICAL CONDUCTIVITY. THIS CAN BE ACCOMPLISHED BY INSTALLATION OF A 12 GAUGE SINGLE STRAND COPPER TRACER WIRE. ALL TRACER WIRE SHALL BE TAPED TO THE TOP OF THE PIPE AT 5-FOOT INTERVALS. THE CONTRACTOR IS TO INSTALL TRACER WIRE ACCESS BOXES (USA BLUE BOOK #22408) 2' ± BEHIND EACH FIRE HYDRANT.
18. ALL PIPE LENGTHS ARE APPROXIMATE. LENGTHS INDICATED ON THE PLANS ARE BETWEEN CENTER OF FITTING TO CENTER OF FITTING.
19. WHEN IT IS NECESSARY TO LOWER OR RAISE WATER LINES AT UTILITY CROSSINGS, A MINIMUM OF 1.50 FEET SHALL BE MAINTAINED VERTICALLY BETWEEN OUTSIDE OF PIPES.
20. ALL VALVE BOXES, APPURTENANCES, AND RIMS SHALL BE ADJUSTED TO FINAL GRADE BY THE CONTRACTOR PRIOR TO ACCEPTANCE OF THE WORK.

ISSUED FOR REVIEW

NOT FOR CONSTRUCTION

WWE
WRIGHT WATER ENGINEERS, INC.
2490 W. 26TH AVE. SUITE 100A
DENVER, CO 80211
(303)480-1700 FAX(303)480-1020

REVISIONS				COMMENTS
NO.	BY	DATE	DESCRIPTION	
1	–	–	–	–

		DATE
DESIGN	CBB/DWF	01/04/17
DETAIL	JKG	01/04/17
CHECK	WFL	01/04/17
APPROVAL		
SCALE	NOTED	
FILE	MARBLE-VINCIGUERRA-WATR-LINE.dwg	

JOB NO. 931-122.200
REVISION NO. 0
SHEET NO. 1

Plot Date/Time: 01/04/2017, 12:07:13 PM; Z:\PROJECT FILES\72-99\931-122\931-122.200\CAD-GIS\CAD\01_CAD\B_WWE-DWGS\MARBLE-VINCIGUERRA-WATR-LINE.DWG-COVER

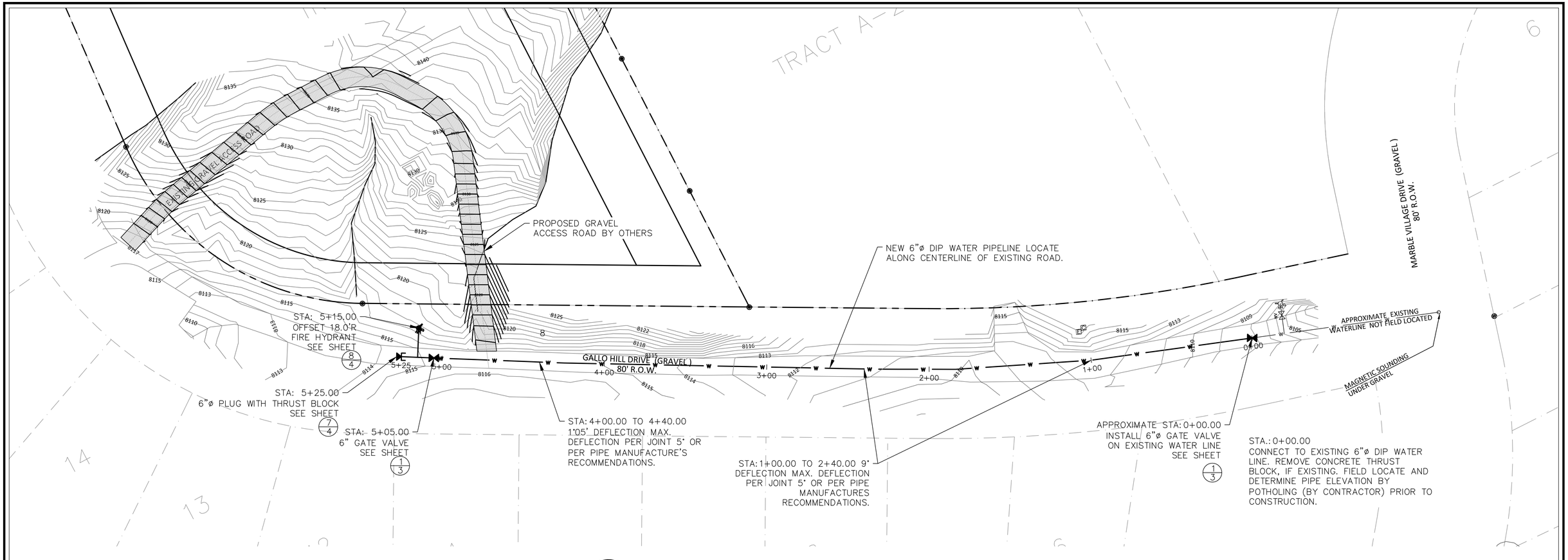

NORTH

SITE PLAN

0 15 30 60 90

SCALE IN FEET
1"=30'

NOTES:

1. ALL PIPE LENGTHS, STATIONING, BOUNDARIES, AND APPURTENANCE LOCATIONS ARE APPROXIMATE. CONTRACTOR SHALL FIELD VERIFY AND FIT AS NECESSARY.
2. CONTRACTOR SHALL COORDINATE INTERRUPTION OF WATER SERVICE WITH THE MARBLE WATER COMPANY AND OBTAIN ALL PERMITS FOR DISCHARGING WATER DURING CONSTRUCTION.
3. SURVEY BY SOPRIS ENGINEERING, LLC. FROM SEPTEMBER 1, 2016.

LEGEND

—w—	PROPOSED DISTRIBUTION PIPELINE
	PROPOSED WATER VALVE
	PROPOSED 6"ø PLUG WITH THRUST BLOCK
	PROPOSED FIRE HYDRANT
	PROPOSED EDGE OF ROAD (BY OTHERS)
— — —	EXISTING VINCIGUERRA PROPERTY BOUNDARY
— · —	EXISTING PROPERTY BOUNDARY
—w—	EXISTING DISTRIBUTION PIPELINE
	EXISTING FIRE HYDRANT
WV	EXISTING WATER VALVE
	EDGE OF EXISTING ROAD

ISSUED FOR REVIEW

NOT FOR CONSTRUCTION

WRIGHT WATER ENGINEERS, INC.
2490 W. 26TH AVE. SUITE 100A
DENVER, CO 80211
(303)480-1700 FAX(303)480-1020

REVISIONS				COMMENTS
NO.	BY	DATE	DESCRIPTION	
△	–	–	–	–

		DATE
DESIGN	CBB/DWF	01/04/17
DETAIL	JKG	01/04/17
CHECK	WFL	01/04/17
APPROVAL		
SCALE		NOTED
MARBLE–VINCIGUERRA–WATR–LINE.dwg		

MARBLE WATER COMPANY
VINCIGUERRA WATERLINE EXTENSION

SITE PLAN

JOB NO. 931–122.200
REVISION NO. 0
SHEET NO. 2

Plot Date/Time: 01/04/2017, 12:13:36 PM; Z:\PROJECT FILES\72-99\931-122\931-122.200\CAD-GIS\CAD\01_CAD\B_WWE-DWGS\MARBLE-VINCIGUERRA-WATR-LINE.DWG-SITE PLAN

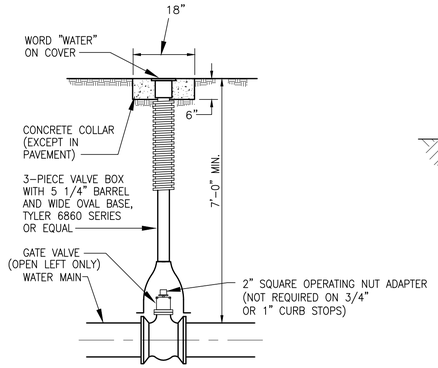

NOTES:

1. VALVE BOX SHALL BE SET AS TO BE 1/4" BELOW FINAL GRADE OF ASPHALT/CONCRETE PAVEMENT. VALVE BOXES TO BE PLACED IN AREAS OTHER THAN PAVEMENT (I.E. DIRT OR LANDSCAPING) SHALL HAVE A 18"SQX6" THICK CONCRETE COLLAR SET FLUSH WITH FINAL GRADE.
2. CONCRETE PAD TO BE PLACED USING PROPER FORMS; SET SQUARE AND FLUSH WITH GROUND SO AS TO LOOK PROFESSIONALLY CONSTRUCTED
3. IF THE DISTANCE FROM FINAL GRADE TO THE OPERATING NUT IS GREATER THAN 6'-6" OPERATOR EXTENSIONS SHALL BE CONNECTED TO VALVE OPERATOR USING SET SCREW TO RAISE THE NUT TO WITHIN 12"-18" BELOW GRADE.
4. TYLER 6860 SERIES BOX WITH WIDE OVAL BASE, OR APPROVED EQUAL, REQUIRED ON ALL VALVES INCLUDING ALL CURB STOPS EXCEPT 3/4" RESIDENTIAL SERVICES. APPLICABLE 3/4" RESIDENTIAL SERVICE BOXES TO BE APPROVED BY ENGINEER PRIOR TO INSTALLATION.

1/3 VALVE BOX

N.T.S

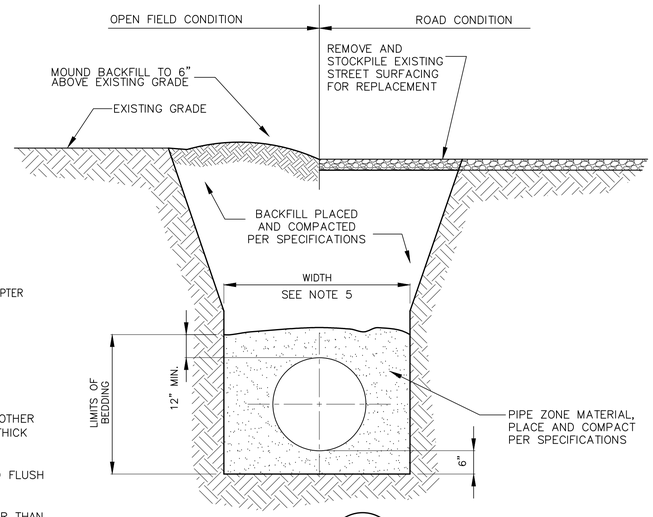

NOTES:

1. IF UNSTABLE MATERIALS ARE FOUND IN TRENCH BOTTOM. OVER EXCAVATE AND PLACE 1-1/2" STABILIZATION ROCK TO REQUIRED DEPTH FOR STABLE TRENCH BOTTOM. PLACE 8 MIL POLYETHYLENE BETWEEN ROCK AND SQUEEGEE BEDDING.
2. SHOULD THE TRENCH BE EXCAVATED WIDER THAN ALLOWED, A CONCRETE CRADLE SHALL BE PLACED WITH 2500 PSI CONCRETE FOR TRENCH BOTTOM TO PIPE SPRINGLINE.
3. TRENCH TO BE BRACED OR SHEETED AS NECESSARY FOR THE SAFETY OF THE WORKMEN AND THE PROTECTION OF OTHER UTILITIES IN ACCORDANCE WITH LOCAL, STATE AND FEDERAL SAFETY REGULATIONS.
4. MINIMUM COVER W/O INSULATION TO BE 7' BELOW FINAL GRADE.
5. TRENCH WIDTH SHALL NOT BE MORE THAN 24" NOR LESS THAN 12" WIDER THAN THE LARGEST OUT SIDE DIAMETER OF THE PIPE.

2/3 TYPICAL TRENCH

N.T.S

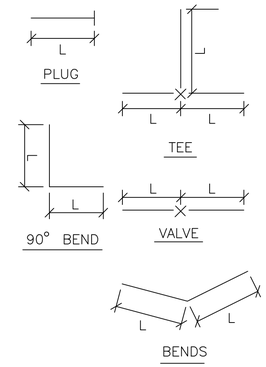

NOTES:

1.) LENGTH OF RESTRAINED PIPE MEASURED EACH WAY FROM VALVES AND BENDS.
2.) CLAMPS, RODS & MEGALUGS NOT ALLOWED FOR 24" & LARGER PIPES.
3.) D=DIAMETER, L=LENGTH, G=GRADE M.S.=MILD STEEL, H.S.=HIGH STRENGTH.
4.) MINIMUM 8' GROUND COVER REQUIRED.
5.) BASED ON 150 PSI INTERNAL PRESSURE
6.) M.S. = MILD STEEL ROD ASTM A36.
7.) H.S. = HIGH STRENGTH ROD ASTM A193 GRADE B7.
8.) NUTS SHALL BE ASTM A307 GRADE A OR B HEXAGON HEAVY SERIES. HIGH STRENGTH NUTS SHALL BE ASTM A 194, GRADE 2H.
9.) SEE TIE ROD DETAIL DRAWING. ALSO, TIE ROD COUPLING DETAILS, CLAMP DETAILS AND SET CLAMP DETAILS.
10.) LENGTH REFERS TO THE AMOUNT OF PIPE WHICH MUST BE RESTRAINED TOGETHER AND IS NOT NECESSARILY THE LENGTH OF THE RODS.
11.) LENGTH OF RESTRAINED PIPE CHART IS ALSO FOR THE LENGTH OF JOINT RESTRAINT FOR EBBA IRON MEGALUGS OR UNIFLANGE PIPE RESTRAINT DEVICES.
12.) CROSSES MUST BE RESTRAINED IN ALL APPLICABLE DIRECTIONS.
13.) 12" AND SMALLER IN LINE VALVES AND TEES SHALL HAVE A MECHANICAL JOINT RESTRAINT DEVICE ON EACH SIDE OF THE FITTING OR VALVE. MECHANICAL JOINT RESTRAINT DEVICE SHALL BE: DIP – EBAA 1100 SERIES, UNI-FLANGE SERIES 1400, OR EQUIVALENT; PVC – EBAA MEGALUG 2000 PV SERIES, UNI-FLANGE SERIES 1500, OR EQUIVALENT.
14.) IF A VALVE IS WITHIN DISTANCE "L" OF A FITTING, THE VALVE MUST BE TIED TO THAT FITTING.
15.) A SECOND VALVE WILL BE REQUIRED TO BE CLOSED WHEN EXCAVATING NEXT TO AN EXISTING VALVE.
16.) IF D.I.P. IS POLYETHYLENE WRAPPED, TIE RODS ARE TO BE ENCLOSED INSIDE THE WRAP.

PIPE SIZE	4"	6"	8"	12"	16"	20"	
FITTING							
90° BEND TEE, PLUG	30'	45'	60'	86'	108'	132'	
VALVE	–	–	–	–	108'	132'	
45° BEND	9'	13'	18'	25'	32'	39'	
22 1/2° BEND	1'	4'	5'	7'	8'	10'	
11 1/4° BEND	–	–	1'	2'	2'	3'	

3/3 RESTRAINED PIPE LENGTH

N.T.S

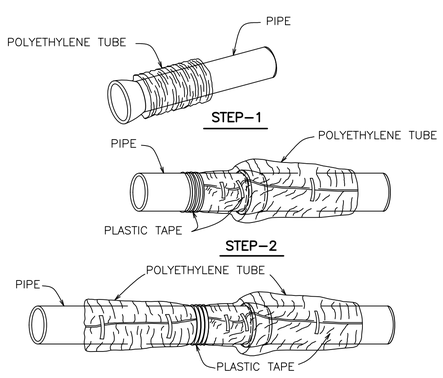

FIELD INSTALLATION-POLYETHYLENE WRAP

STEP-1 PLACE TUBE OF POLYETHYLENE MATERIAL AROUND PIPE PRIOR TO LOWERING PIPE INTO TRENCH.

STEP-2 PULL THE TUBE OVER THE LENGTH OF THE PIPE. TAPE TUBE TO PIPE AT JOINT. FOLD MATERIAL AROUND THE ADJACENT SPIGOT END AND WRAP WITH THREE CIRCUMFERENTIAL TURNS OF TWO-INCH WIDE PLASTIC TAPE TO HOLD PLASTIC TUBE AROUND SPIGOT END.

STEP-3 ADJACENT TUBE OVERLAPS FIRST TUBE AND IS SECURED WITH PLASTIC ADHESIVE TAPE. THE POLYETHYLENE TUBE MATERIAL COVERING THE PIPE WILL BE LOOSE. EXCESS MATERIAL SHALL BE NEATLY DRAWN UP AROUND THE PIPE BARREL, FOLDED INTO AN OVERLAP ON TOP OF THE PIPE AND HELD IN PLACE BY MEANS OF PIECES OF THE PLASTIC TAPE AT APPROXIMATELY THREE TO FIVE FOOT INTERVALS.

4/3 POLYETHYLENE WRAP FOR DUCTILE IRON PIPE

N.T.S

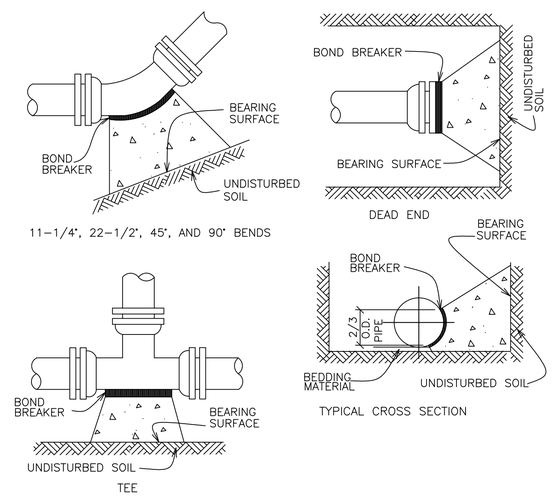

MINIMUM BEARING SURFACE AREA REQUIRED – SQUARE FEET					
SIZE	11 1/4° BEND OR 22 1/2° BEND	45° BEND	90° BEND	TEE	CAP (OR PLUG)
6" OR 8"	2	4	4	5.25	5.25

1. CONCRETE FOR THRUST BLOCKS SHALL HAVE NOT LESS THAN 3000 PSI STRENGTH AT 28 DAYS.
2. POUR CONCRETE AGAINST FIRM GROUND.
3. JOINTS AND BOLTS SHALL BE ACCESSIBLE FOR REPAIRS.

5/3 THRUST BLOCK

N.T.S

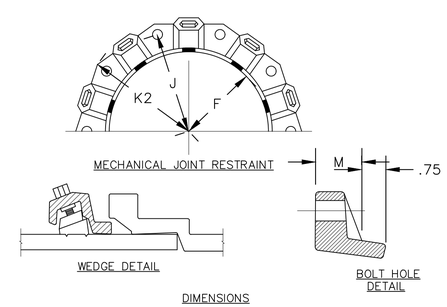

DIMENSIONS

	NOMINAL PIPE SIZE	NO. OF BOLTS	NO. OF WEDGES	K2 INCHES	J INCHES	F INCHES	M INCHES	
PVC	4"	2	2					PVC
	6"	6	3	11.12	9.50	7.00	0.88	
	8"	6	4	13.37	11.75	9.15	1.00	
	10"	8	6	15.62	14.00	11.20	1.00	
	12"	8	8	17.88	16.25	13.30	1.25	
DI	4"	4	2					DI
	6"	6	3	11.12	9.50	7.00	0.88	
	8"	6	4	13.37	11.75	9.15	1.00	
	10"	8	6	15.62	14.00	11.20	1.00	
	12"	8	8	17.88	16.25	13.30	1.25	

THE MECHANICAL JOINT RESTRAINT DEVICES SHALL BE OF THE TYPE LISTED BELOW OR EQUAL APPROVED BY THE ENGINEER

EBAA IRON, INC.
MEGA-LUG SERIES 1100 OR 2000 PV (4"-12")
FORD METER BOX CO.
UNIFLANGE SERIES 1300 OR 1400 (4"-12")

6/3 MECHANICAL JOINT RESTRAINT DETAIL

N.T.S

ISSUED FOR REVIEW

NOT FOR CONSTRUCTION

WWE WRIGHT WATER ENGINEERS, INC.
2490 W. 26TH AVE. SUITE 100A
DENVER, CO 80211
(303)480-1700 FAX(303)480-1020

REVISIONS				
NO.	BY	DATE	DESCRIPTION	COMMENTS
1	–	–	–	–

		DATE
DESIGN	CBB/DWF	01/04/17
DETAIL	JKG	01/04/17
CHECK	WFL	01/04/17
APPROVAL		
SCALE		NOTED
MARBLE-VINCIGUERRA-WATR-LINE.dwg		

MARBLE WATER COMPANY
VINCIGUERRA WATERLINE EXTENSION

DETAILS SHEET 1

JOB NO. 931-122.200
REVISION NO. 0
SHEET NO. 3

Plot Date/Time: 01/04/2017, 03:46:27 PM; Z:\PROJECT FILES\72-99\931-122\931-122.200\CAD-GIS\CAD\01_CAD\B_WWE-DWGS\MARBLE-VINCIGUERRA-WATR-LINE.DWG-DETAIL 1

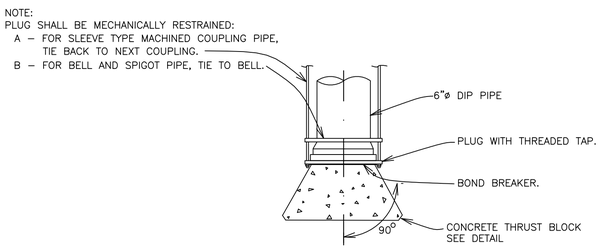

5/3

7/4 PLUG WITH THRUST BLOCK DETAIL

N.T.S

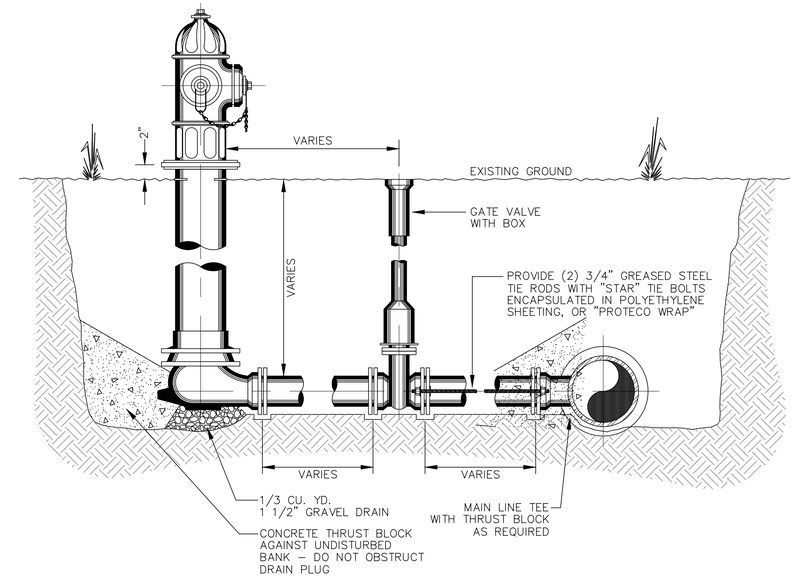

8/4 FIRE HYDRANT DETAIL

N.T.S

ISSUED FOR REVIEW

NOT FOR CONSTRUCTION

WRIGHT WATER ENGINEERS, INC.
2490 W. 26TH AVE. SUITE 100A
DENVER, CO 80211
(303)480-1700 FAX(303)480-1020

REVISIONS				COMMENTS
NO.	BY	DATE	DESCRIPTION	
1	–	–	–	–

		DATE
DESIGN	CBB/DWF	01/04/17
DETAIL	JKG	01/04/17
CHECK	WFL	01/04/17
APPROVAL		
SCALE		NOTED
MARBLE–VINCIGUERRA–WATR–LINE.dwg		

MARBLE WATER COMPANY
VINCIGUERRA WATERLINE EXTENSION

DETAILS SHEET 2

JOB NO. 931–122.200
REVISION NO. 0
SHEET NO. 4

Plot Date/Time: 01/04/2017, 12:14:54 PM; Z:\PROJECT FILES\72-99\931-122\931-122.200\CAD-GIS\CAD\01_CAD\B_WWE-DWGS\MARBLE-VINCIGUERRA-WATR-LINE.DWG-DETAIL 2