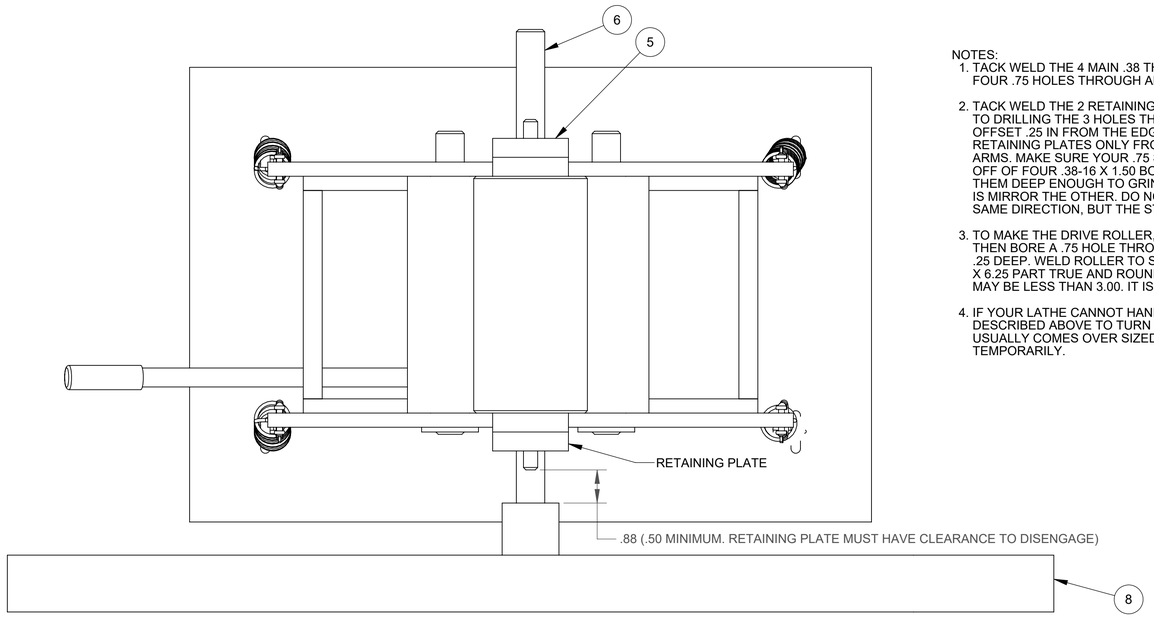

NOTES:

1. TACK WELD THE 4 MAIN .38 THICK PLATES OF THE ROLLER CARRIAGE TOGETHER BEFORE DRILLING THE FOUR .75 HOLES THROUGH ALL 4 PIECES. GRIND AND SHAPE BEFORE SEPARATING. THIS ENSURES PERFECT ALIGNMENT.

2. TACK WELD THE 2 RETAINING PLATES (.50 X 2.00 X 3.50) ON TOP OF THE 2 MAIN STAND ARMS (.50 X 2.00 X 16.50) PRIOR TO DRILLING THE 3 HOLES THROUGH ALL 4 PIECES (TWO .38 HOLES AND ONE .75 HOLE). THE RETAINING PLATES SHOULD BE OFFSET .25 IN FROM THE EDGE. THIS ENSURES PERFECT ALIGNMENT. AFTER THE HOLES ARE DRILLED, REMOVE THE 2 RETAINING PLATES ONLY FROM THE TACKED TOGETHER STACK. NOW CUT THE 45° ANGLE SLOT EDGES IN THE 2 MAIN STAND ARMS. MAKE SURE YOUR .75 SHAFTS HAVE COMPLETE CLEARANCE ALL THE WAY UP THE SLOT TO THE .75 HOLE. CUT THE HEAD OFF OF FOUR .38-16 X 1.50 BOLTS AND PLUG WELD THEM IN THE .38 HOLES IN THE MAIN STAND ARMS. MAKE SURE YOU INSET THEM DEEP ENOUGH TO GRIND FLUSH AND STILL HOLD. THEY MUST BE GROUND FLUSH TO THE INSIDE. MAKE SURE ONE ARM IS MIRROR THE OTHER. DO NOT WELD THE STUDS ON THE SAME SIDE AS THE OTHER ARM. BOTH SLOTS SHOULD BE FACING THE SAME DIRECTION, BUT THE STUDS SHOULD BE FACING THE OPPOSITE DIRECTIONS.

3. TO MAKE THE DRIVE ROLLER, FIRST MAKE THE SHAFT DOING ALL THE TURNING OPERATIONS FIRST ON A LATHE. THEN BORE A .75 HOLE THROUGH THE RAW 3.00 X 6.25 STEEL ROUND. CHAMFER THE INSIDE EDGES AT LEAST .25 DEEP. WELD ROLLER TO SHAFT IN THE CHAMFER ON BOTH SIDES. RE-CHUCK IN LATHE AND TURN THE 3.00 X 6.25 PART TRUE AND ROUND. USE THE LATHE TO TURN DOWN THE WELDS FLUSH WITH THE SHAFT. FINAL DIAMETER MAY BE LESS THAN 3.00. IT IS NOT CRITICAL FOR IT TO BE 3.00 EXACTLY.

4. IF YOUR LATHE CANNOT HANDLE LARGE DIAMETER STOCK TO MAKE THE ROLLERS, IT IS EASIEST TO USE THE PROCESS DESCRIBED ABOVE TO TURN THEM. TACK WELD THE RAW ROLLERS TO SCRAP TURNED DOWN .75 STOCK. .75 STOCK USUALLY COMES OVER SIZED. **DO NOT FULLY WELD THEM TO THE SHAFTS!!!** WELD JUST ENOUGH TO HOLD THEM TEMPORARILY.

BILL OF MATERIAL

QTY.	DESCRIPTION	MATERIAL	UNIT WT	ITEM NO.
1	ROLLER STAND	ASTM A36 Steel	33.08	1
1	ROLLER CARRIAGE	ASTM A36 Steel	29.32	2
2	ROLLER,2.25 X 6.25	ASTM A36 Steel	6.26	3
2	PIN,.75 X 8.00	ASTM A36 Steel	1.05	4
2	RETAINER PLATE,.50 X 2.00 X 3.50	ASTM A36 Steel	0.90	5
1	DRIVE ROLLER & SHAFT,3.00 X 6.25 & .75 X 14.00	ASTM A36 Steel	13.44	6
1	BOTTLE JACK	---	7.90	7
1	TURNING WHEEL,27.63 O.D.	ASTM A36 Steel	9.86	8
4	SMALL SHACKLE	---	0.02	9
4	SPRING	---	0.07	10
4	EYE BOLT	---	0.05	11

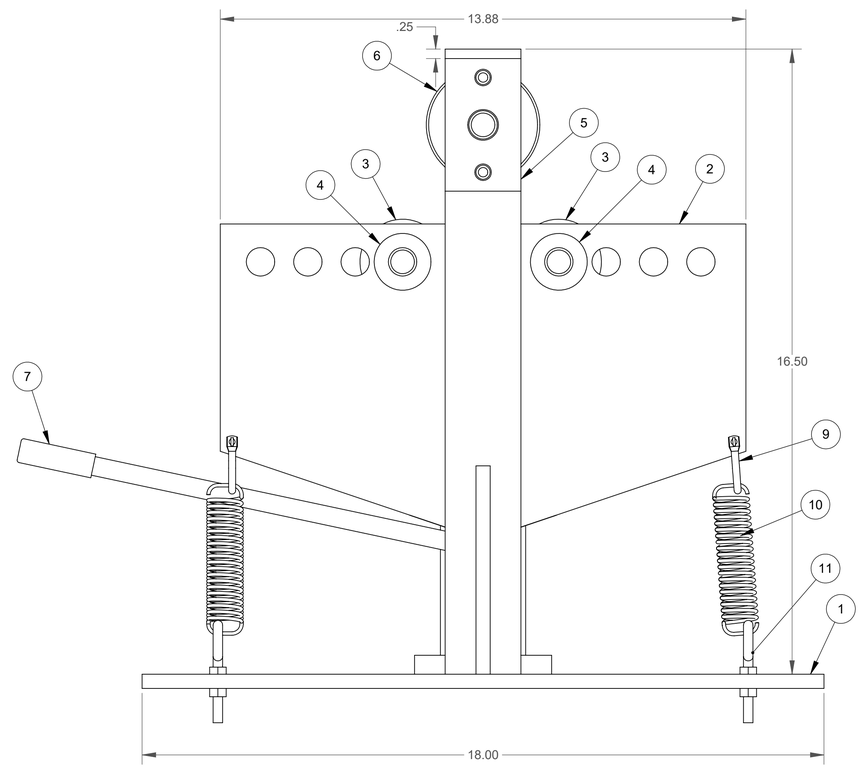

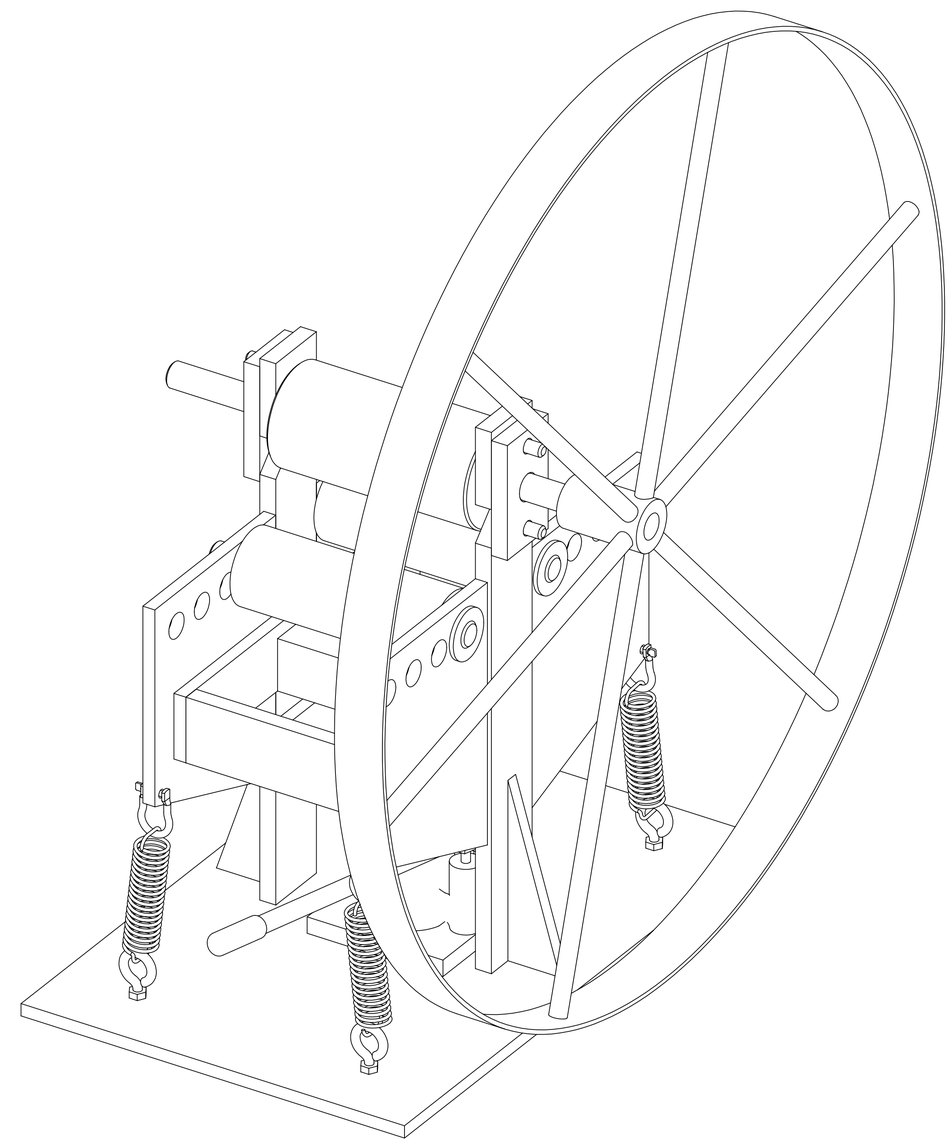

DESIGNS BY Phil .com

SCALE	WGT(LBS)	SHEET
1:2	110.59	1 OF 3

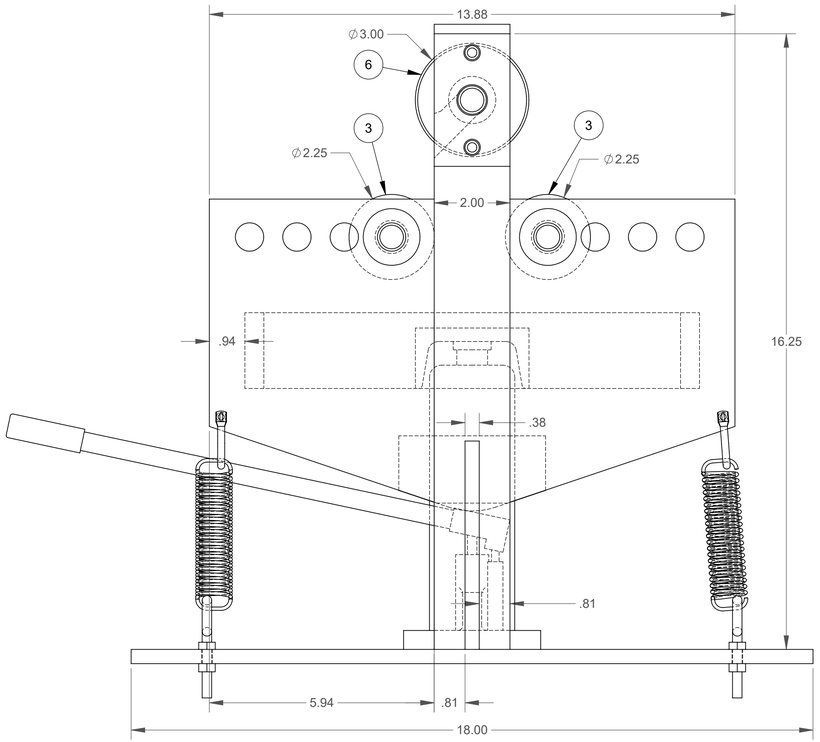

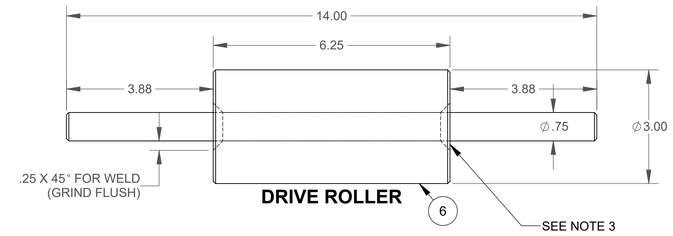

DRIVE ROLLER

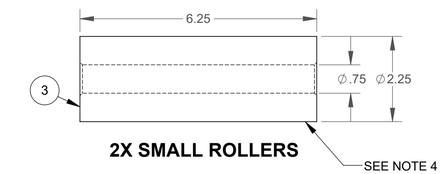

2X SMALL ROLLERS

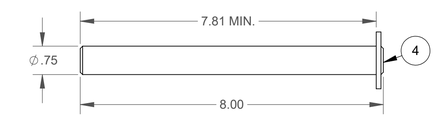

2X PINS

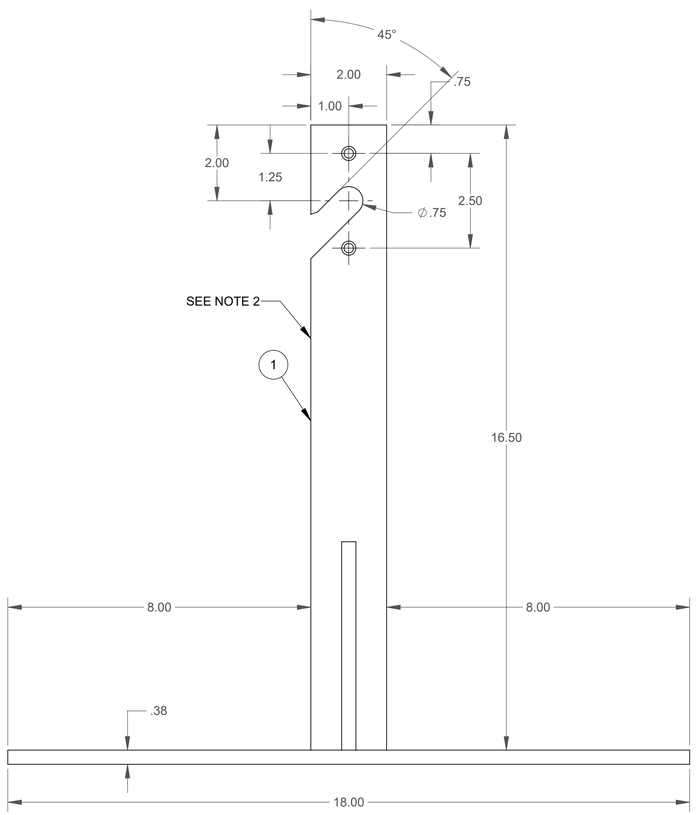

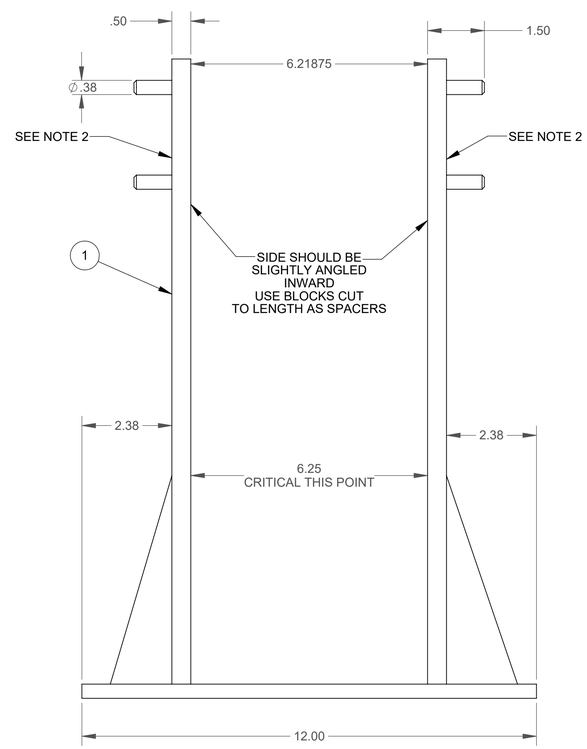

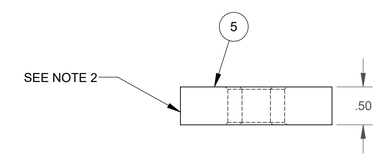

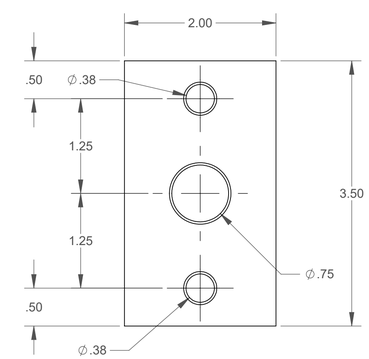

2X RETAINERS

DESIGNS BY Phil .com

SCALE	WGT(LBS)	SHEET
1:2	110.59	2 OF 3

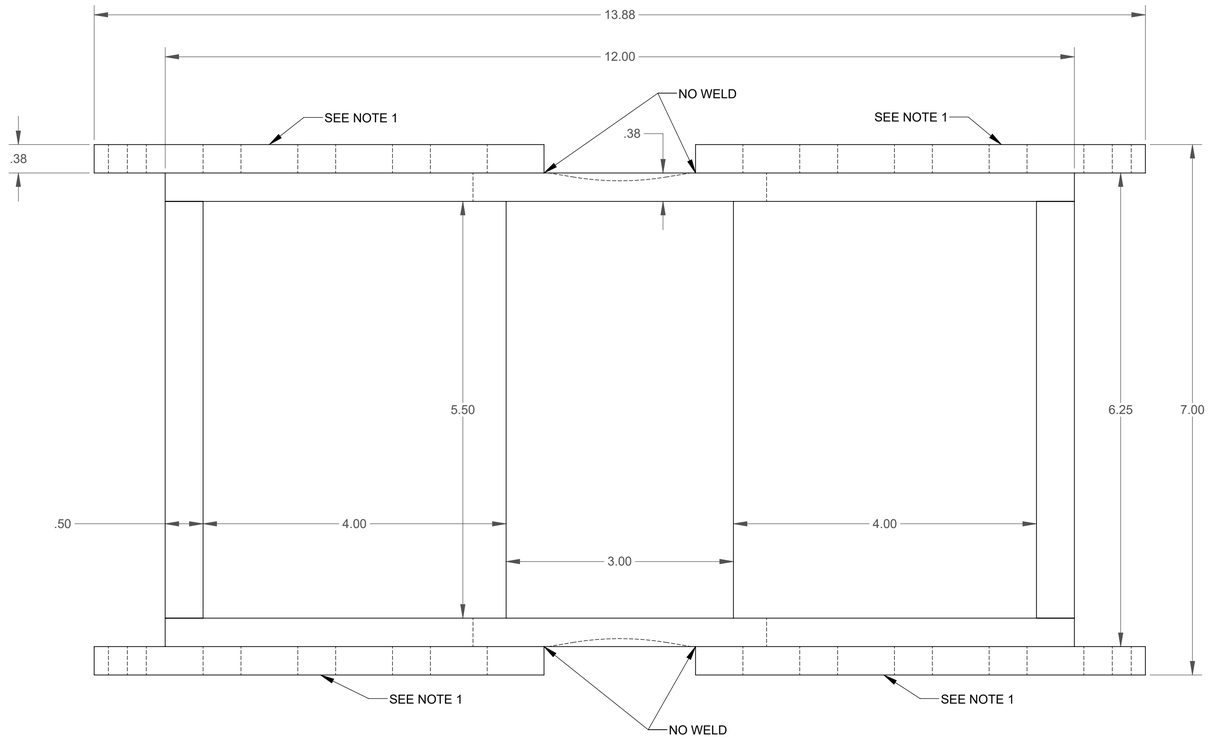

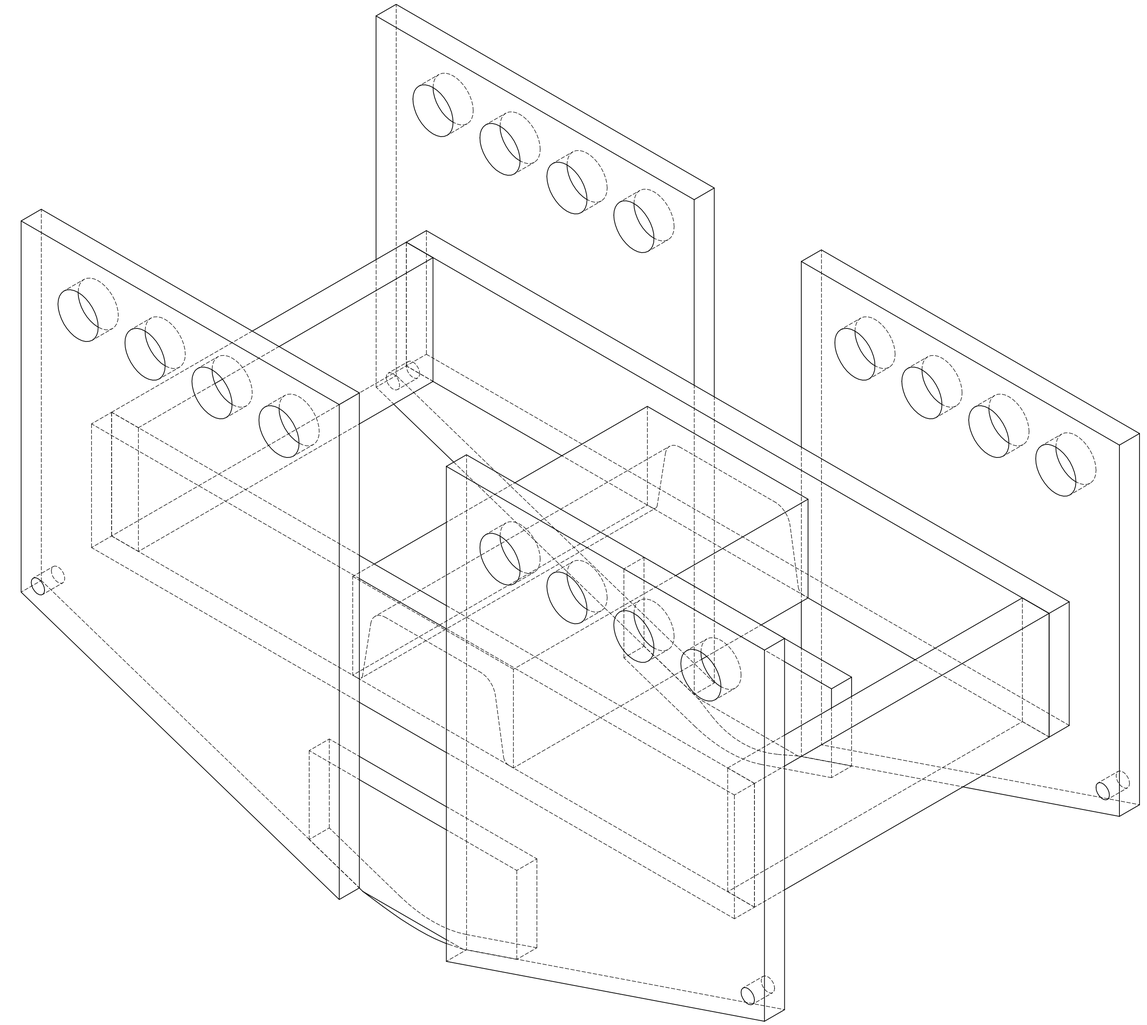

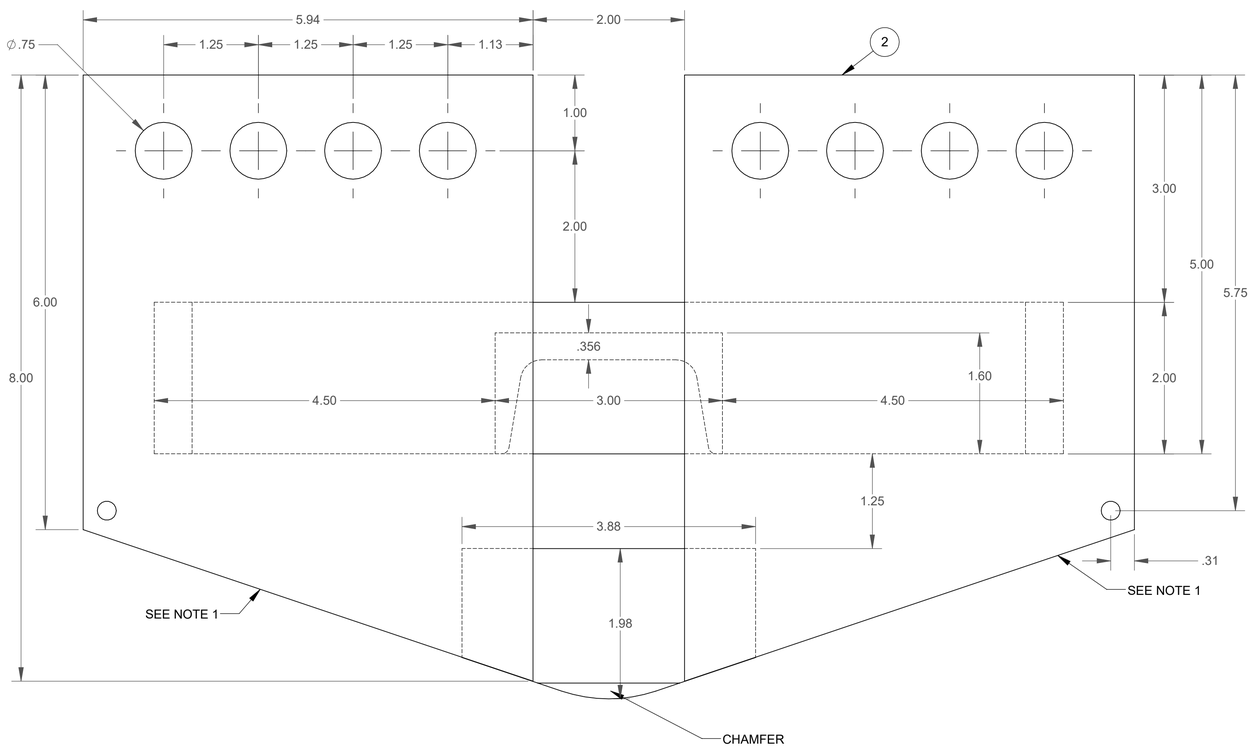

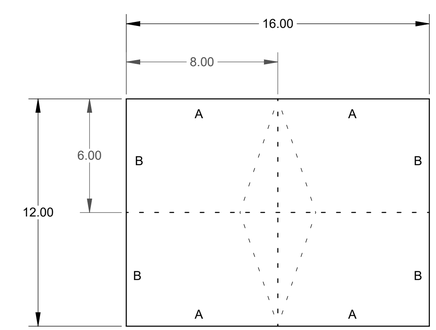

CUT THE 4 MAIN PLATES OF THE ROLLER CARRIAGE FROM ONE PIECE OF 12.00 X 16.00 X .38 THICK PLATE. MATCH UP THE "A" AND "B" EDGES PERFECTLY FLUSH PRIOR TO TACK WELDING TOGETHER. THESE EDGES SHOULD BE 90° FROM THE METAL SUPPLIER. THE OTHER EDGES ARE NON-CRITICAL EDGES AND DO NOT HAVE TO BE PERFECTLY 90°.

DESIGNS BY Phil .com

SCALE	WGT(LBS)	SHEET
1:1	29.32	3 OF 3