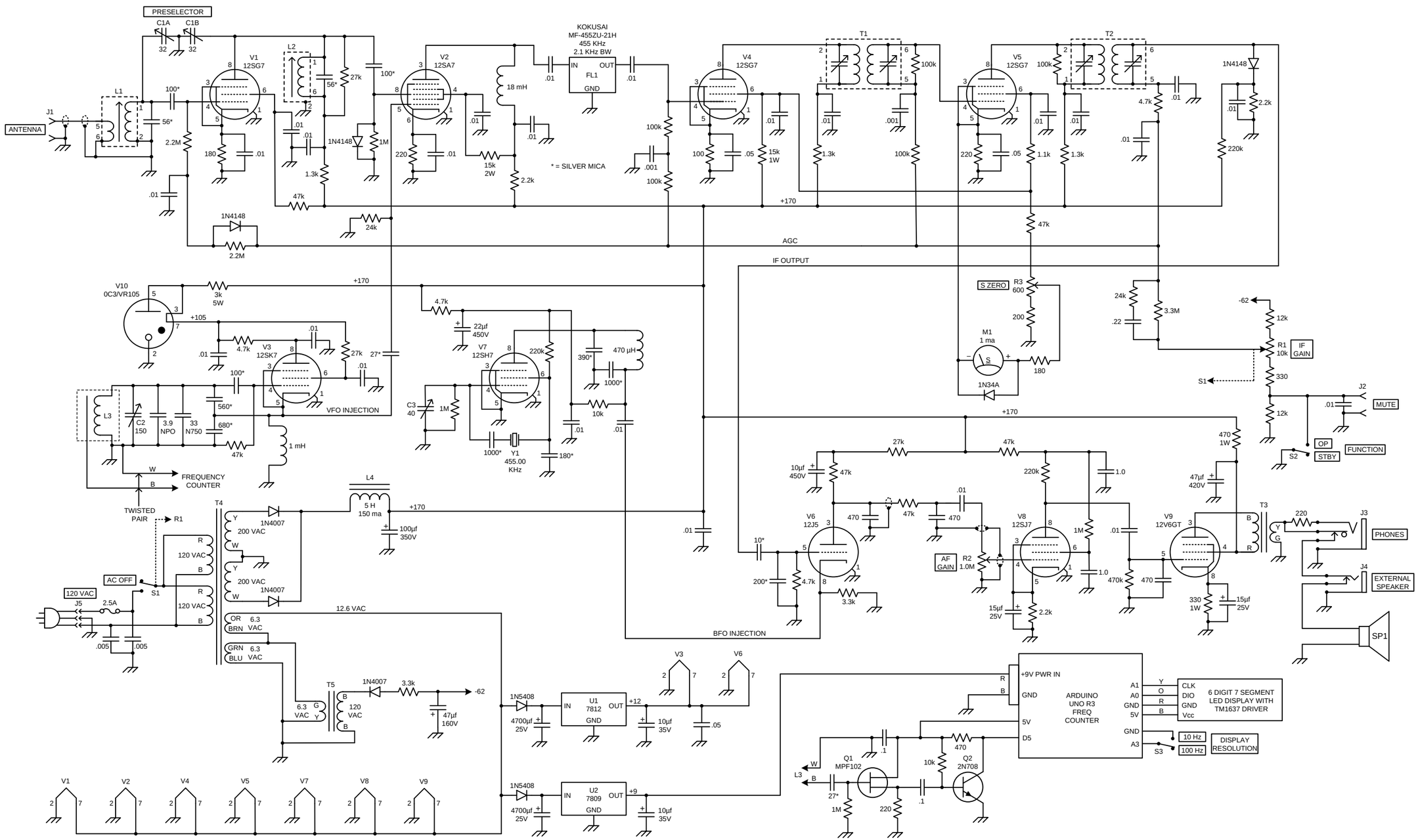

OCTALMANIA

80 METER SSB RECEIVER
HOMEBREWED BY KG7TR

REVISION 19 JUNE 2021